Dist	COUNTY	ROUTE	POST MILES TOTAL PROJECT	SHEET No.	TOTAL SHEETS
12	Ora	5	5.6/6.6	1	154

STATE OF CALIFORNIA

DEPARTMENT OF TRANSPORTATION

ACIM-005-2(960)78E

PROJECT PLANS FOR CONSTRUCTION ON

STATE HIGHWAY

IN ORANGE COUNTY
IN SAN CLEMENTE AND DANA POINT
FROM 0.1 MILE SOUTH OF CAMINO DE ESTRELLA OVERCROSSING
TO 0.2 MILE SOUTH OF VIA CALIFORNIA OVERCROSSING
AT CAMINO DE ESTRELLA

TO BE SUPPLEMENTED BY STANDARD PLANS DATED MAY 2006

INDEX OF PLANS

SHEET No.	DESCRIPTION
1	TITLE AND LOCATION MAP
2-5	TYPICAL CROSS SECTIONS
6-9	LAYOUTS
10-11	PROFILES
12-13	PROFILE AND SUPERELEVATION DIAGRAMS
14-17	CONSTRUCTION DETAILS
18-21	TEMPORARY WATER POLLUTION CONTROL PLAN, DETAILS AND QUANTITIES
22-25	CONTOUR GRADING,
26-34	DRAINAGE PLANS, PROFILES, DETAILS AND QUANTITIES
35-38	UTILITY PLANS
39	CONSTRUCTION AREA SIGNS
40-48	STAGE CONSTRUCTION PLANS
49-50	TRAFFIC HANDLING PLANS, DETAILS AND QUANTITIES
51-55	PAVEMENT DELINEATION PLANS, DETAILS AND QUANTITIES
56-64	SIGN PLANS, DETAILS AND QUANTITIES
65	SUMMARY OF QUANTITIES
66-73	HIGHWAY PLANTING
74-85	ELECTRICAL PLANS
86-131	REVISED AND NEW STANDARD PLANS

STRUCTURE PLANS

132-154	CAMINO DE ESTRELLA OC (WIDEN)

THE STANDARD PLANS LIST APPLICABLE TO THIS CONTRACT IS INCLUDED IN THE NOTICE TO BIDDERS AND SPECIAL PROVISIONS BOOK.

LOCATION MAP

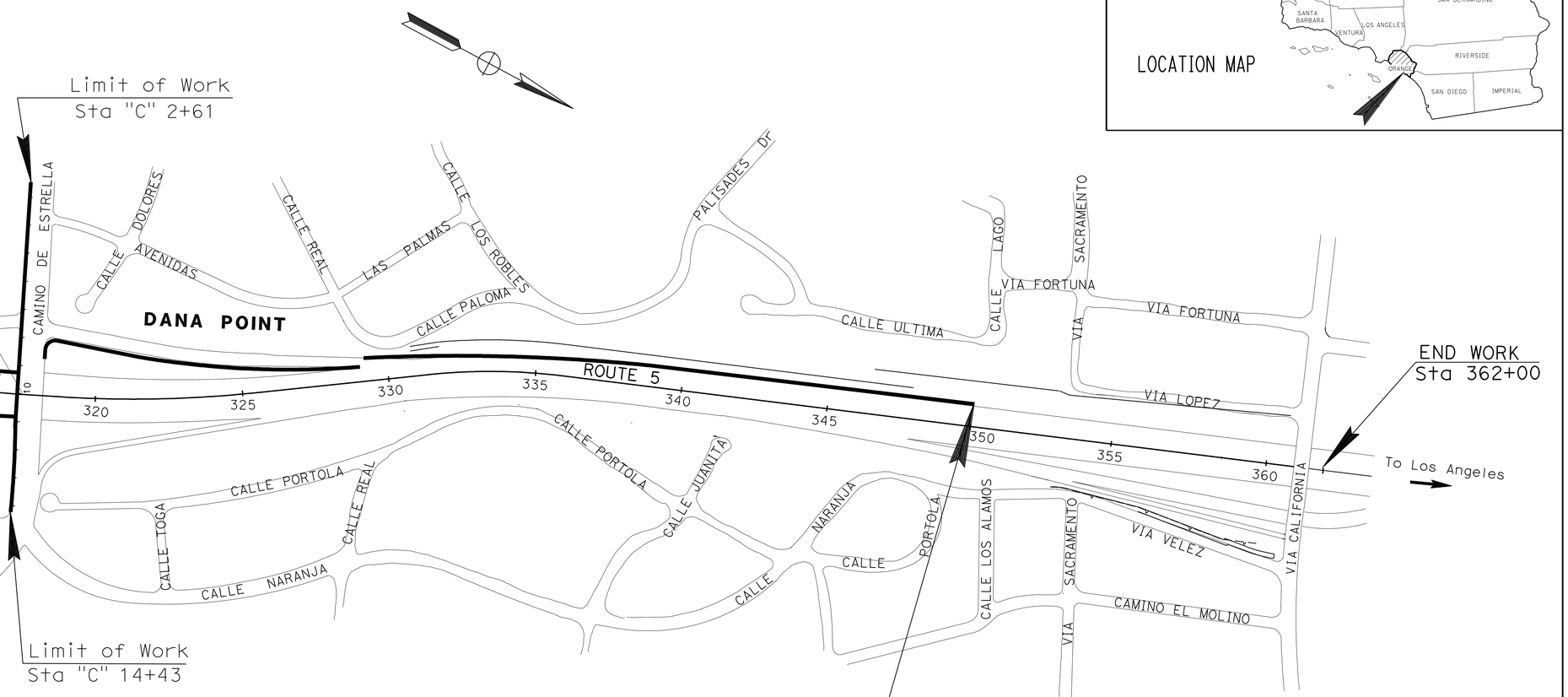

PROJECT MANAGER: AHMED ABOU-ABDOU

DESIGN ENGINEER: JOSEPH LEE

09-13-10
PROJECT ENGINEER REGISTERED CIVIL ENGINEER — DATE

REGISTERED PROFESSIONAL ENGINEER
JOSEPH LEE
No. C59058
Exp. 6/30/11
CIVIL
STATE OF CALIFORNIA

February 14, 2011
PLANS APPROVAL DATE

THE STATE OF CALIFORNIA OR ITS OFFICERS OR AGENTS SHALL NOT BE RESPONSIBLE FOR THE ACCURACY OR COMPLETENESS OF SCANNED COPIES OF THIS PLAN SHEET.

THE CONTRACTOR SHALL POSSESS THE CLASS (OR CLASSES) OF LICENSE AS SPECIFIED IN THE "NOTICE TO BIDDERS."

CONTRACT No.	12-0F0604
PROJECT ID	1200000110

LAST REVISION 07-05-10 — DATE PLOTTED => 19-OCT-2011 TIME PLOTTED => 07:43

Dist	COUNTY	ROUTE	POST MILES TOTAL PROJECT	SHEET No.	TOTAL SHEETS
12	Ora	5	5.6/6.6	2	154

REGISTERED CIVIL ENGINEER 09-13-10 DATE

2-14-11
PLANS APPROVAL DATE

REGISTERED PROFESSIONAL ENGINEER
JOSEPH LEE
No. C59058
Exp. 6/30/11
CIVIL
STATE OF CALIFORNIA

THE STATE OF CALIFORNIA OR ITS OFFICERS OR AGENTS SHALL NOT BE RESPONSIBLE FOR THE ACCURACY OR COMPLETENESS OF SCANNED COPIES OF THIS PLAN SHEET.

NOTES:

1. DIMENSIONS OF THE STRUCTURAL SECTIONS ARE SUBJECT TO TOLERANCES SPECIFIED IN THE STANDARD SPECIFICATIONS.
2. SUPERELEVATION AS SHOWN OR AS DIRECTED BY THE ENGINEER.
3. FOR TYPE AND LOCATION OF CONCRETE BARRIERS, CURBS, DIKES, AND ISLANDS, SEE LAYOUT PLANS.
4. FOR LOCATIONS OF BIO-FILTRATION SWALES, SEE LAYOUT PLANS.
5. FOR LOCATIONS AND PLACEMENT OF MATERIAL WITH AERIALLY DEPOSITED LEAD, SEE CONSTRUCTION DETAIL SHEETS.

ABBREVIATIONS:

RSC RAPID STRENGTH CONCRETE

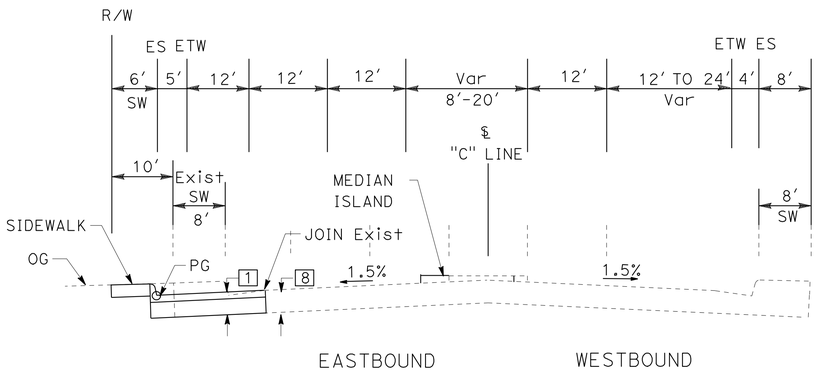

CAMINO DE ESTRELLA

Sta "C" 6+28.46 TO Sta "C" 8+52.96

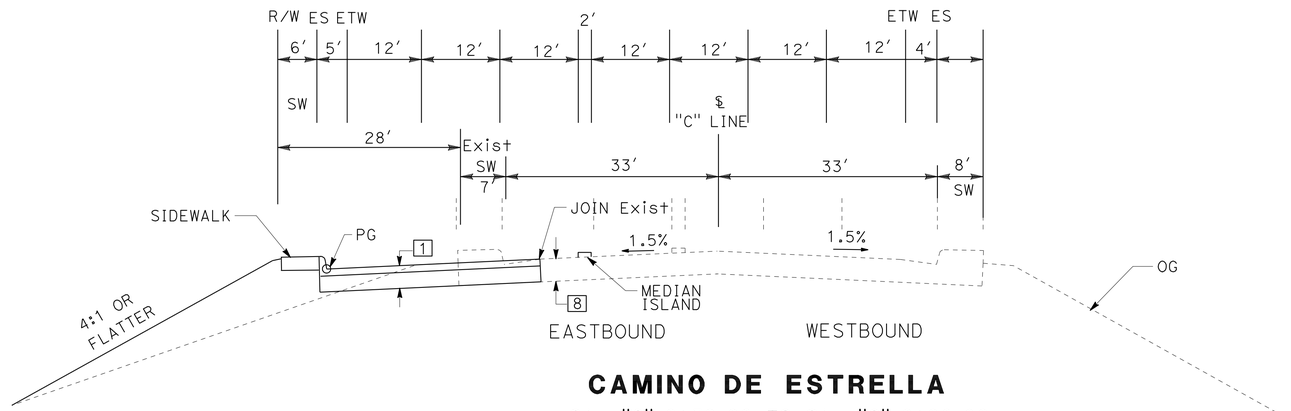

CAMINO DE ESTRELLA

Sta "C" 8+52.96 TO Sta "C" 8+98.08

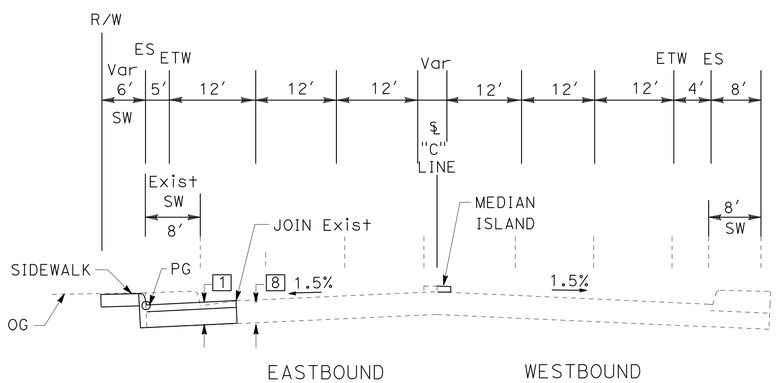

CAMINO DE ESTRELLA

Sta "C" 2+61.35 TO Sta "C" 6+28.46

DESIGN DESIGNATION (SB ROUTE 5)

ADT (2008)	226,000	D	58.13%
ADT (2030)	284,760	T	4.25%
DHV	9551	V	70 MPH
ESAL	41,850,000	TI	14

LEGEND:

1	NEW STRUCTURAL SECTION	0.60′ HMA (Type A) 2.25′ Class 2 AB
2	NEW STRUCTURAL SECTION	0.70′ HMA (Type A) 2.65′ Class 2 AB
3	NEW STRUCTURAL SECTION	0.80′ RSC 0.25′ HMA (Type A) 2.90′ CLASS 3 AS
4	NEW STRUCTURAL SECTION	0.50′ HMA (Type A) 0.75′ Class 2 AB
5	NEW STRUCTURAL SECTION	0.10′ HMA (Type A)
6	Exist STRUCTURAL SECTION	0.50′ HMA 0.50′ ACB 0.40′ AB
7	Exist STRUCTURAL SECTION	0.75′ HMA 1.25′ AB
8	Exist STRUCTURAL SECTION	0.87′ HMA

TYPICAL CROSS SECTIONS

NO SCALE

X-1

REVISED BY	DATE REVISED
JOSEPH LEE	03-18-10
QUAN TRINH	03-18-10

CALCULATED-DESIGNED BY
CHECKED BY
FUNCTIONAL SUPERVISOR
MILI LIM STAMATION

STATE OF CALIFORNIA - DEPARTMENT OF TRANSPORTATION
Caltrans
DESIGN

LAST REVISION 04-27-10
DATE PLOTTED => 17-FEB-2011
TIME PLOTTED => 10:31

Dist	COUNTY	ROUTE	POST MILES TOTAL PROJECT	SHEET No.	TOTAL SHEETS
12	Ora	5	5.6/6.6	3	154

REGISTERED CIVIL ENGINEER DATE 09-13-10

2-14-11
PLANS APPROVAL DATE

REGISTERED PROFESSIONAL ENGINEER
JOSEPH LEE
No. C59058
Exp. 6/30/11
CIVIL
STATE OF CALIFORNIA

THE STATE OF CALIFORNIA OR ITS OFFICERS OR AGENTS SHALL NOT BE RESPONSIBLE FOR THE ACCURACY OR COMPLETENESS OF SCANNED COPIES OF THIS PLAN SHEET.

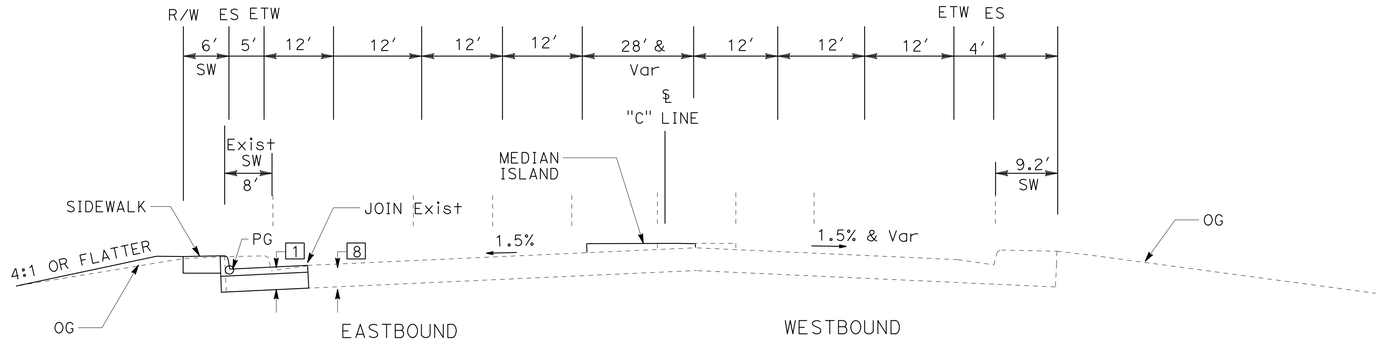

CAMINO DE ESTRELLA

Sta "C" 12+54.92 TO Sta "C" 14+52.14

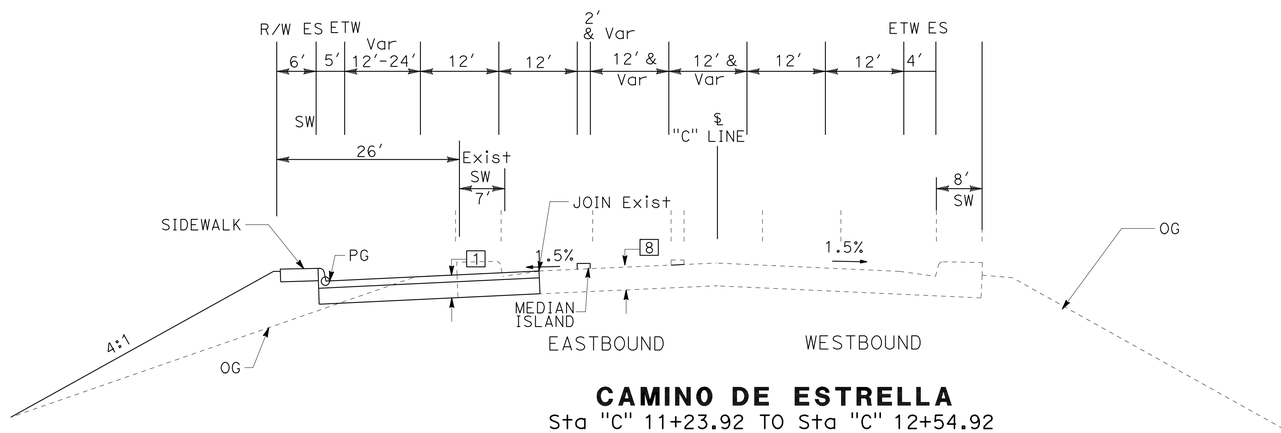

CAMINO DE ESTRELLA

Sta "C" 11+23.92 TO Sta "C" 12+54.92

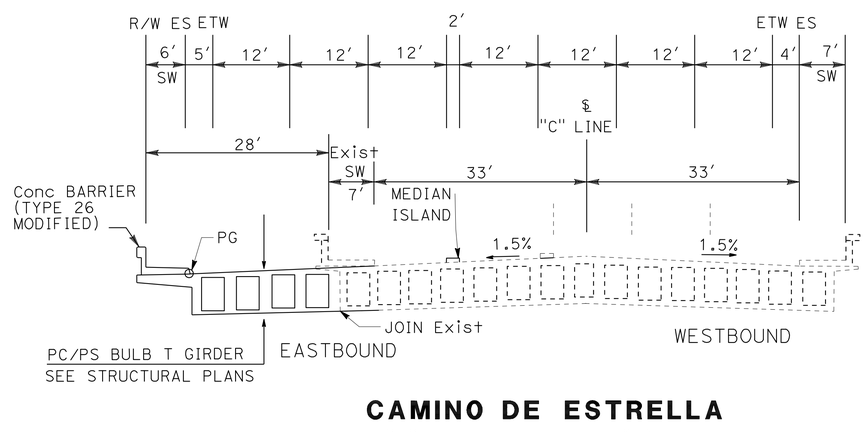

CAMINO DE ESTRELLA

Sta "C" 8+98.08 TO Sta "C" 11+23.92

TYPICAL CROSS SECTIONS

NO SCALE

X-2

STATE OF CALIFORNIA - DEPARTMENT OF TRANSPORTATION
Caltrans®
DESIGN

FUNCTIONAL SUPERVISOR: MILI LIM STAMATION
CALCULATED-DESIGNED BY: JOSEPH LEE
CHECKED BY: QUAN TRINH
REVISED BY: 03-18-10
DATE REVISED: 03-18-10

LAST REVISION: 04-27-10
DATE PLOTTED => 17-FEB-2011
TIME PLOTTED => 10:32

Dist	COUNTY	ROUTE	POST MILES TOTAL PROJECT	SHEET No.	TOTAL SHEETS
12	Ora	5	5.6/6.6	4	154

REGISTERED CIVIL ENGINEER DATE 09-13-10

2-14-11
PLANS APPROVAL DATE

REGISTERED PROFESSIONAL ENGINEER
JOSEPH LEE
No. C59058
Exp. 6/30/11
CIVIL
STATE OF CALIFORNIA

THE STATE OF CALIFORNIA OR ITS OFFICERS OR AGENTS SHALL NOT BE RESPONSIBLE FOR THE ACCURACY OR COMPLETENESS OF SCANNED COPIES OF THIS PLAN SHEET.

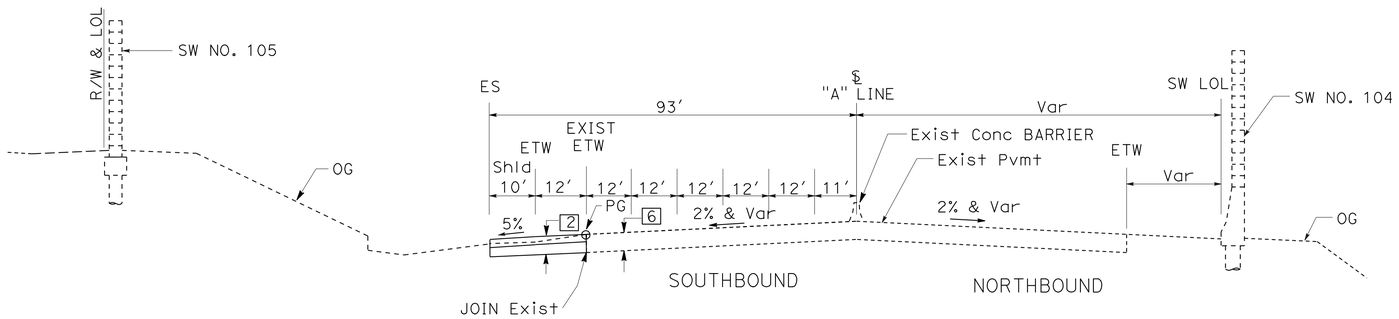

ROUTE 5

Sta "A" 347+00.00 TO Sta "A" 350+00.00

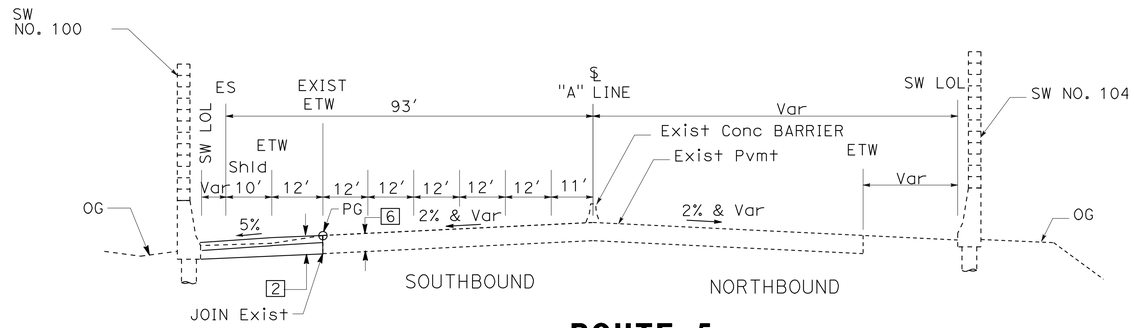

ROUTE 5

Sta "A" 328+18.52 TO Sta "A" 347+00.00

TYPICAL CROSS SECTIONS

NO SCALE

X-3

REVISED BY	DATE REVISED
JOSEPH LEE	03-18-10

CALCULATED-DESIGNED BY	CHECKED BY
QUAN TRINH	

FUNCTIONAL SUPERVISOR: MILI LIM STAMATION

STATE OF CALIFORNIA - DEPARTMENT OF TRANSPORTATION

Caltrans® DESIGN

LAST REVISION 03-18-10 | DATE PLOTTED => 17-FEB-2011 | TIME PLOTTED => 10:32

Dist	COUNTY	ROUTE	POST MILES TOTAL PROJECT	SHEET No.	TOTAL SHEETS
12	Ora	5	5.6/6.6	5	154

REGISTERED CIVIL ENGINEER DATE 09-13-10

2-14-11
PLANS APPROVAL DATE

REGISTERED PROFESSIONAL ENGINEER
JOSEPH LEE
No. C59058
Exp. 6/30/11
CIVIL
STATE OF CALIFORNIA

THE STATE OF CALIFORNIA OR ITS OFFICERS OR AGENTS SHALL NOT BE RESPONSIBLE FOR THE ACCURACY OR COMPLETENESS OF SCANNED COPIES OF THIS PLAN SHEET.

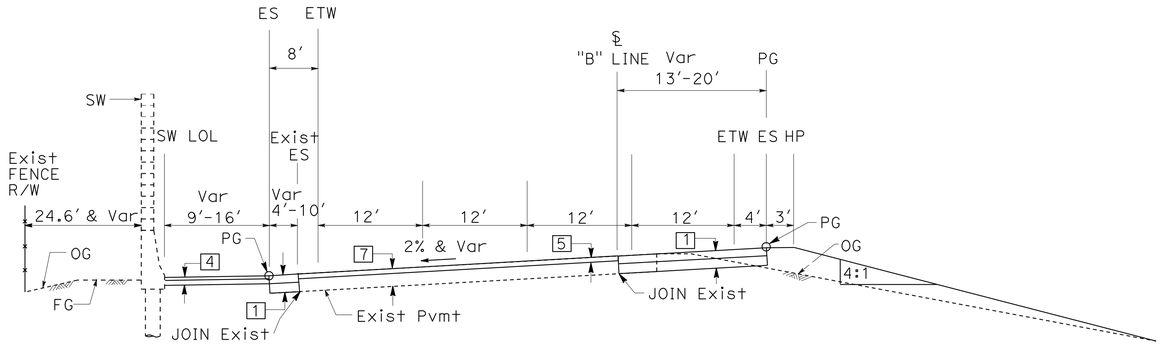

SB ROUTE 5 TO CAMINO DE ESTRELLA OFF-RAMP

Sta "B" 320+75.86 TO Sta "B" 323+50.00

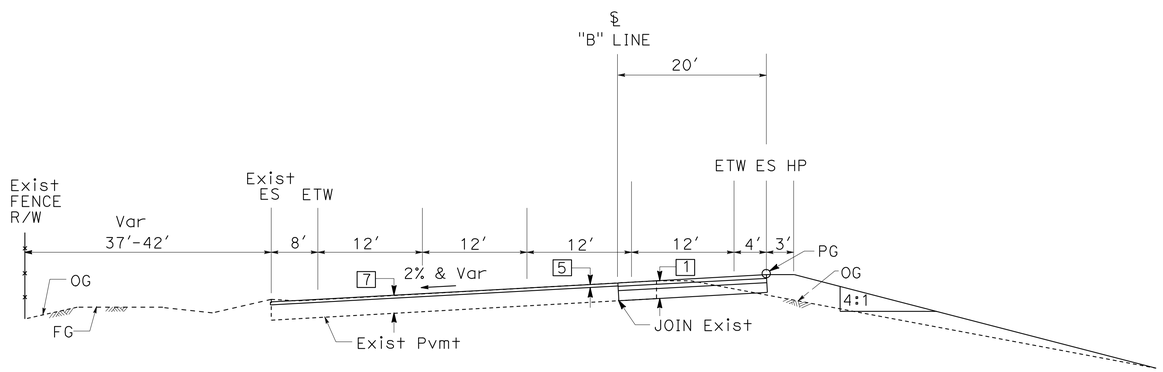

SB ROUTE 5 TO CAMINO DE ESTRELLA OFF-RAMP

Sta "B" 319+49.64 TO Sta "B" 320+75.86

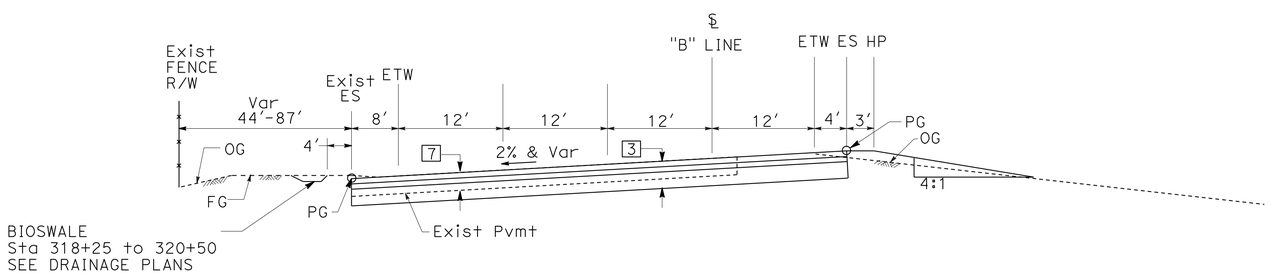

SB ROUTE 5 TO CAMINO DE ESTRELLA OFF-RAMP

(RAMP TERMINI SECTION)

Sta "B" 317+73.45 TO Sta "B" 319+49.64

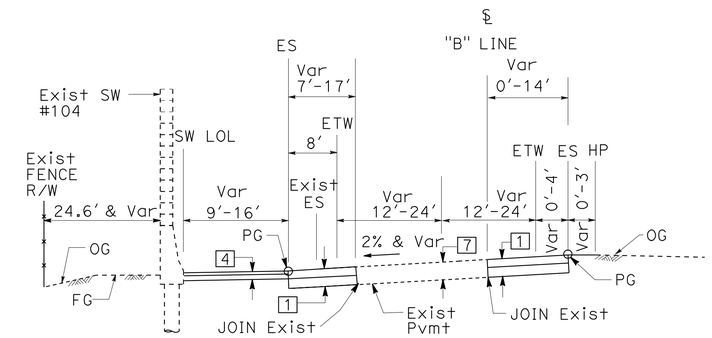

SB ROUTE 5 TO CAMINO DE ESTRELLA OFF-RAMP

Sta "B" 325+60.00 TO Sta "B" 328+18.52

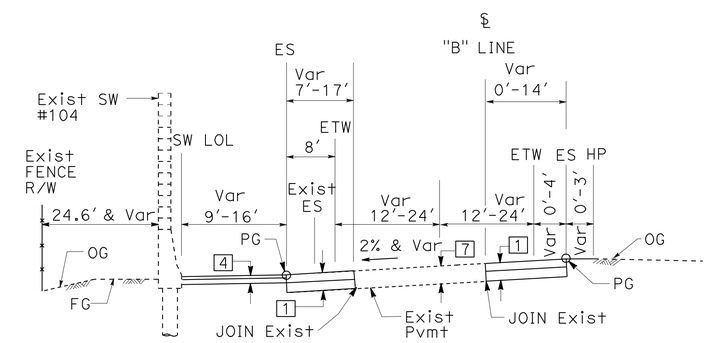

SB ROUTE 5 TO CAMINO DE ESTRELLA OFF-RAMP

Sta "B" 323+50.00 TO Sta "B" 325+60

TYPICAL CROSS SECTIONS

NO SCALE

X-4

REVISED BY	DATE REVISED
03-18-10	03-18-10

JOSEPH LEE — CALCULATED-DESIGNED BY
QUAN TRINH — CHECKED BY
FUNCTIONAL SUPERVISOR: MILI LIM STAMATION

STATE OF CALIFORNIA - DEPARTMENT OF TRANSPORTATION
Caltrans®
DESIGN

LAST REVISION 03-18-10 | DATE PLOTTED => 17-FEB-2011 | TIME PLOTTED => 10:32

Dist	COUNTY	ROUTE	POST MILES TOTAL PROJECT	SHEET No.	TOTAL SHEETS
12	Ora	5	5.6/6.6	6	154

REGISTERED CIVIL ENGINEER 09-13-10 DATE

2-14-11
PLANS APPROVAL DATE

REGISTERED PROFESSIONAL ENGINEER JOSEPH LEE No. C59058 Exp. 6/30/11 CIVIL STATE OF CALIFORNIA

THE STATE OF CALIFORNIA OR ITS OFFICERS OR AGENTS SHALL NOT BE RESPONSIBLE FOR THE ACCURACY OR COMPLETENESS OF SCANNED COPIES OF THIS PLAN SHEET.

NOTE:

FOR ACCURATE RIGHT OF WAY DATA, CONTACT RIGHT OF WAY ENGINEERING AT THE DISTRICT OFFICE.

LEGEND:

- [X] STRUCTURAL SECTION TYPE
- (X) CURVE ALIGNMENT NUMBER
- REMOVE 0.1' HMA (TYPE A) PLACE 0.1' HMA (TYPE A)

CURVE DATA

No.	R	Δ	T	L
1	4000.25'	9°33'59"	334.73'	667.89'
2	2043.99'	11°30'05"	205.85'	410.31'

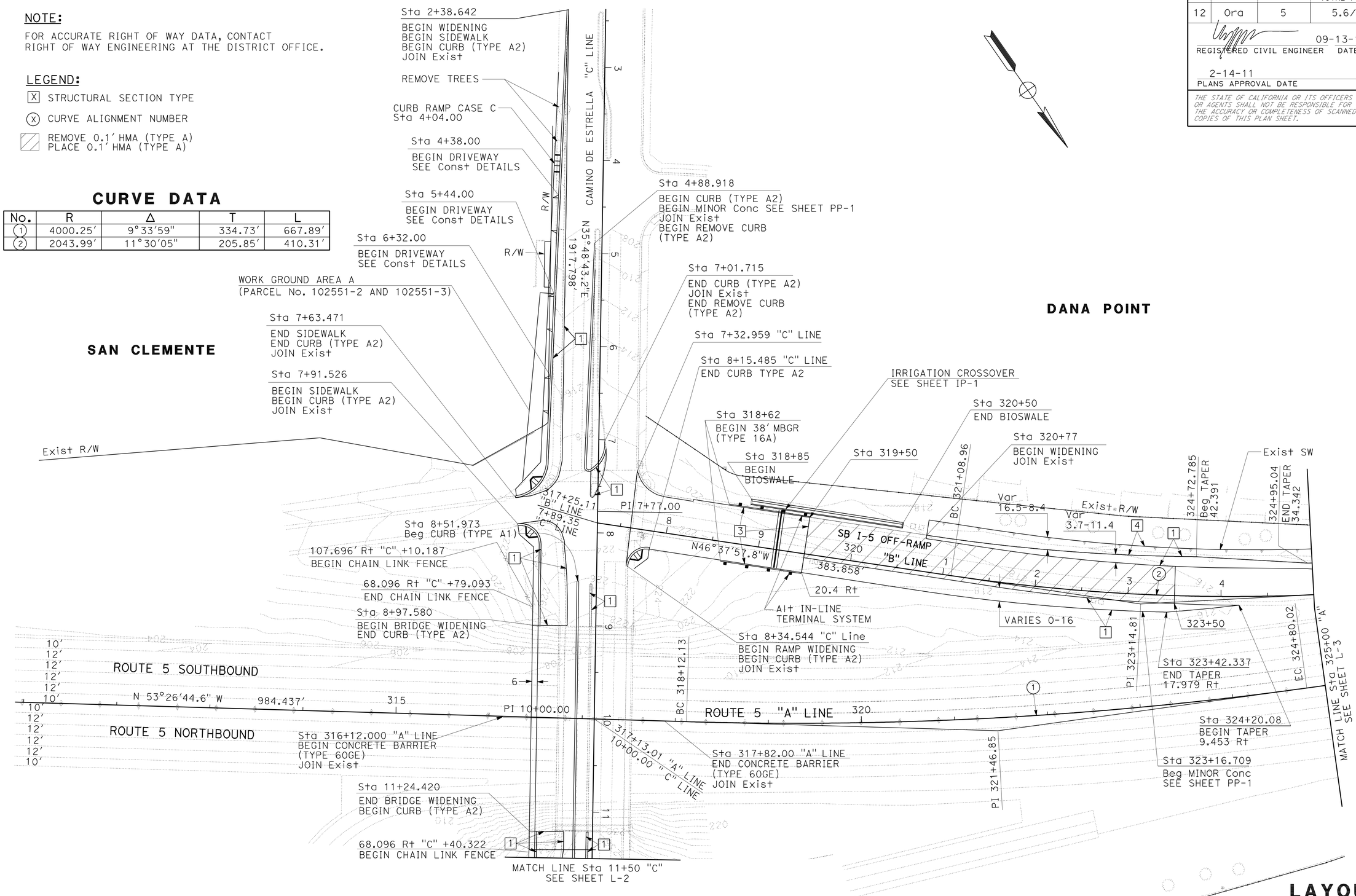

LAYOUT

SCALE: 1" = 50'

L-1

REVISED BY	DATE REVISED
03-18-10	03-18-10

CALCULATED-DESIGNED BY: QUAN TRINH
CHECKED BY: JOSEPH LEE
FUNCTIONAL SUPERVISOR: MILI LIM STAMATION

STATE OF CALIFORNIA - DEPARTMENT OF TRANSPORTATION
Caltrans®
DESIGN

LAST REVISION 03-18-10
DATE PLOTTED => 25-MAY-2011
TIME PLOTTED => 06:11

Dist	COUNTY	ROUTE	POST MILES TOTAL PROJECT	SHEET No.	TOTAL SHEETS
12	Ora	5	5.6/6.6	7	154

REGISTERED CIVIL ENGINEER 09-13-10 DATE

2-14-11
PLANS APPROVAL DATE

REGISTERED PROFESSIONAL ENGINEER
JOSEPH LEE
No. C59058
Exp. 6/30/11
CIVIL
STATE OF CALIFORNIA

THE STATE OF CALIFORNIA OR ITS OFFICERS OR AGENTS SHALL NOT BE RESPONSIBLE FOR THE ACCURACY OR COMPLETENESS OF SCANNED COPIES OF THIS PLAN SHEET.

NOTE:

FOR ACCURATE RIGHT OF WAY DATA, CONTACT
RIGHT OF WAY ENGINEERING AT THE DISTRICT OFFICE.

CURVE DATA

No.	R	Δ	T	L
3	435.03′	20°55′39"	80.34′	158.90′

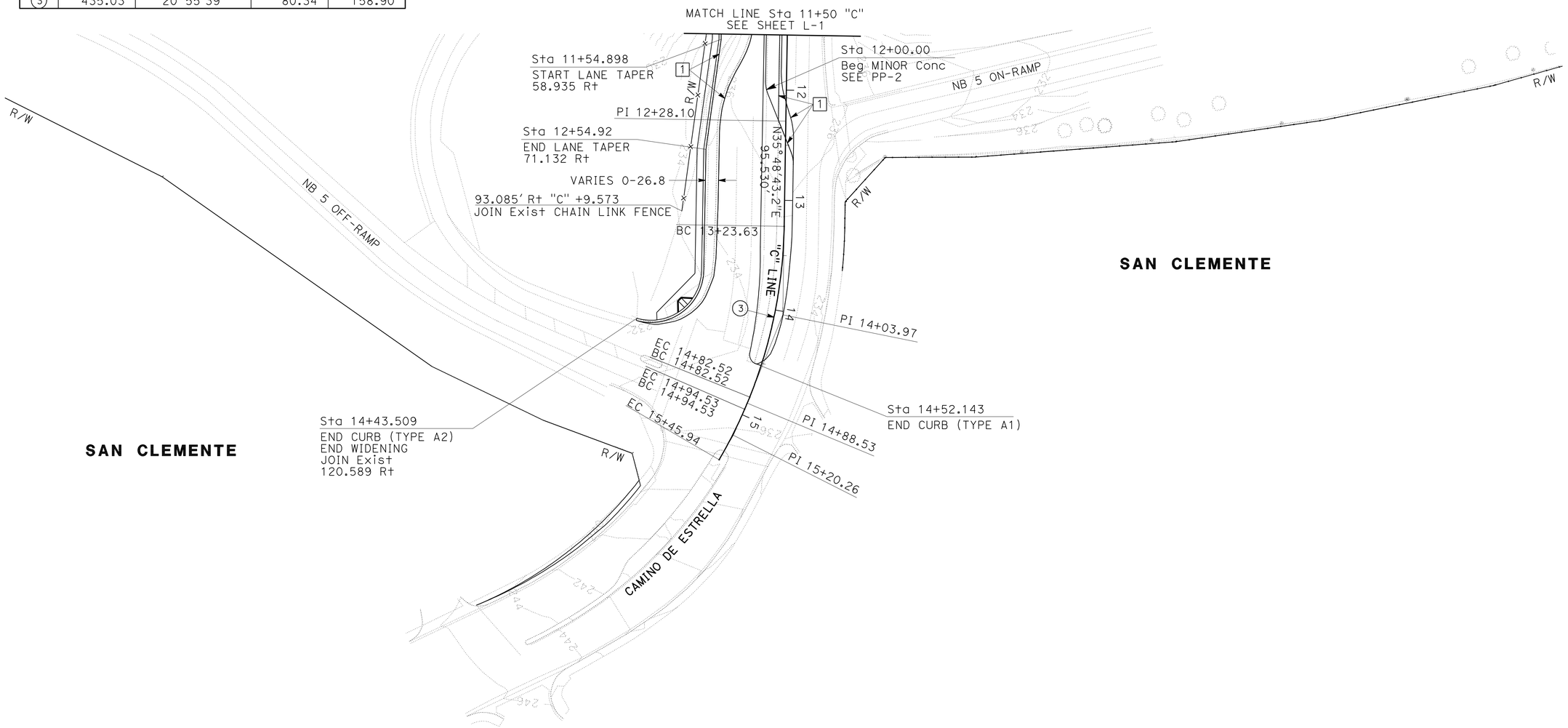

LAYOUT

SCALE: 1" = 50′

L-2

STATE OF CALIFORNIA - DEPARTMENT OF TRANSPORTATION
Caltrans
DESIGN

FUNCTIONAL SUPERVISOR: MILI LIM STAMATION
CALCULATED-DESIGNED BY
CHECKED BY
REVISED BY: JOSEPH LEE
DATE REVISED: 03-18-10

LAST REVISION 03-18-10
DATE PLOTTED => 17-FEB-2011
TIME PLOTTED => 10:41

Dist	COUNTY	ROUTE	POST MILES TOTAL PROJECT	SHEET No.	TOTAL SHEETS
12	Ora	5	5.6/6.6	8	154

REGISTERED CIVIL ENGINEER 09-13-10 DATE

2-14-11
PLANS APPROVAL DATE

REGISTERED PROFESSIONAL ENGINEER
JOSEPH LEE
No. C59058
Exp. 6/30/11
CIVIL
STATE OF CALIFORNIA

THE STATE OF CALIFORNIA OR ITS OFFICERS OR AGENTS SHALL NOT BE RESPONSIBLE FOR THE ACCURACY OR COMPLETENESS OF SCANNED COPIES OF THIS PLAN SHEET.

NOTE:

FOR ACCURATE RIGHT OF WAY DATA, CONTACT RIGHT OF WAY ENGINEERING AT THE DISTRICT OFFICE.

CURVE DATA

No.	R	Δ	T	L
4	2000.00′	13°4′47″	229.28′	456.57′

SAN CLEMENTE

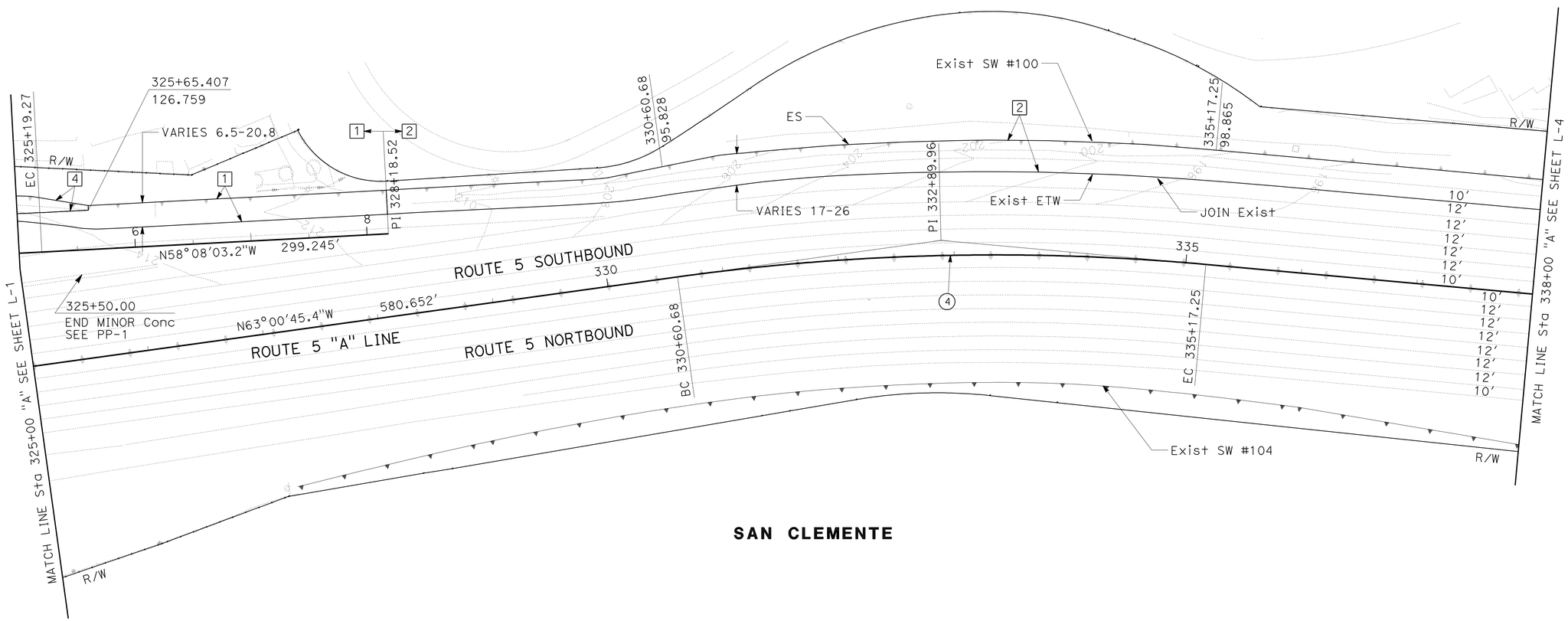

SAN CLEMENTE

LAYOUT

SCALE: 1" = 50′

L-3

CALCULATED-DESIGNED BY	QUAN TRINH
CHECKED BY	JOSEPH LEE
REVISED BY	03-18-10
DATE REVISED	03-18-10
FUNCTIONAL SUPERVISOR	MILI LIM STAMATION

STATE OF CALIFORNIA - DEPARTMENT OF TRANSPORTATION
Caltrans
DESIGN

LAST REVISION 03-18-10 | DATE PLOTTED => 17-FEB-2011 | TIME PLOTTED => 10:41

Dist	COUNTY	ROUTE	POST MILES TOTAL PROJECT	SHEET No.	TOTAL SHEETS
12	Ora	5	5.6/6.6	9	154

REGISTERED CIVIL ENGINEER 09-13-10 DATE

2-14-11
PLANS APPROVAL DATE

REGISTERED PROFESSIONAL ENGINEER
JOSEPH LEE
No. C59058
Exp. 6/30/11
CIVIL
STATE OF CALIFORNIA

THE STATE OF CALIFORNIA OR ITS OFFICERS OR AGENTS SHALL NOT BE RESPONSIBLE FOR THE ACCURACY OR COMPLETENESS OF SCANNED COPIES OF THIS PLAN SHEET.

NOTE:

FOR ACCURATE RIGHT OF WAY DATA, CONTACT
RIGHT OF WAY ENGINEERING AT THE DISTRICT OFFICE.

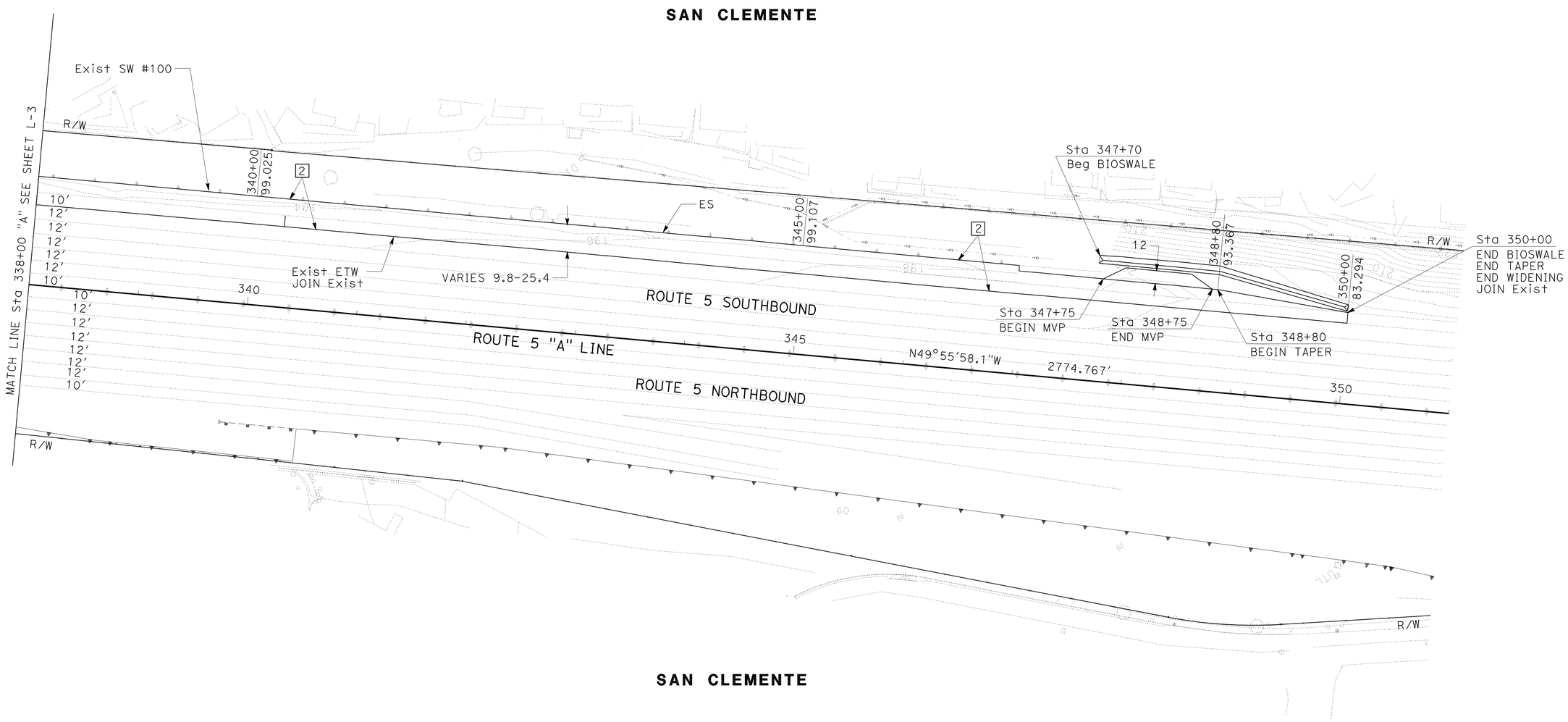

LAYOUT

SCALE: 1" = 50′

L-4

STATE OF CALIFORNIA - DEPARTMENT OF TRANSPORTATION
Caltrans
DESIGN

FUNCTIONAL SUPERVISOR: MILI LIM STAMATION

CALCULATED-DESIGNED BY: QUAN TRINH
CHECKED BY: JOSEPH LEE

REVISED BY: 03-18-10
DATE REVISED: 03-18-10

LAST REVISION 03-18-10
DATE PLOTTED => 17-FEB-2011
TIME PLOTTED => 10:41

Dist	COUNTY	ROUTE	POST MILES TOTAL PROJECT	SHEET No.	TOTAL SHEETS
12	Ora	5	5.6/6.6	10	154

REGISTERED CIVIL ENGINEER DATE 09-13-10

2-14-11
PLANS APPROVAL DATE

REGISTERED PROFESSIONAL ENGINEER
JOSEPH LEE
No. C59058
Exp. 6/30/11
CIVIL
STATE OF CALIFORNIA

THE STATE OF CALIFORNIA OR ITS OFFICERS OR AGENTS SHALL NOT BE RESPONSIBLE FOR THE ACCURACY OR COMPLETENESS OF SCANNED COPIES OF THIS PLAN SHEET.

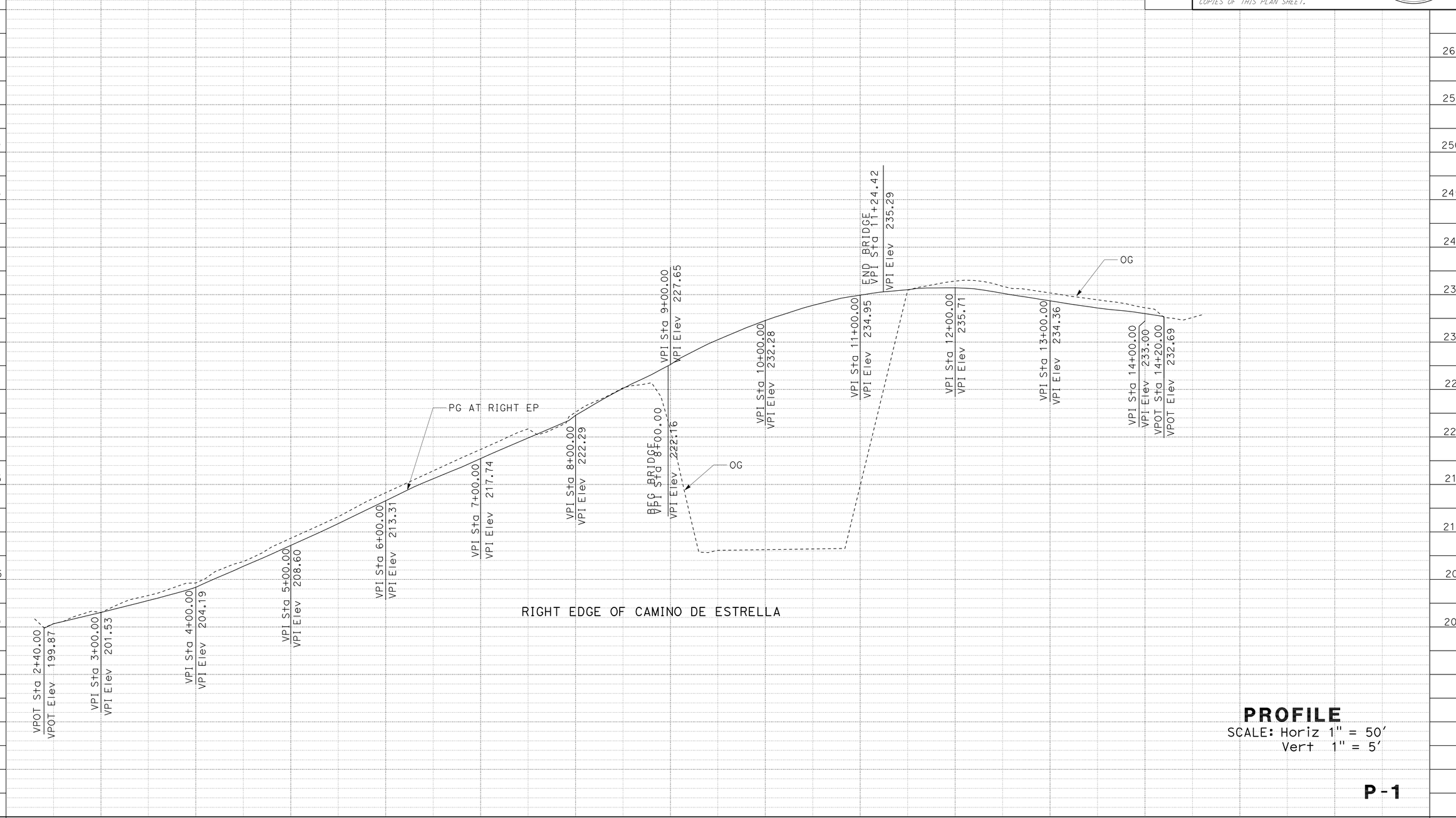

PROFILE
SCALE: Horiz 1" = 50'
Vert 1" = 5'

P-1

REVISED BY	03-18-10
DATE REVISED	03-18-10
CALCULATED-DESIGNED BY	QUAN TRINH
CHECKED BY	JOSEPH LEE
FUNCTIONAL SUPERVISOR	MILI LIM STAMATION

STATE OF CALIFORNIA - DEPARTMENT OF TRANSPORTATION
Caltrans
DESIGN

LAST REVISION 03-18-10
DATE PLOTTED => 16-FEB-2011
TIME PLOTTED => 16:24

Dist	COUNTY	ROUTE	POST MILES TOTAL PROJECT	SHEET No.	TOTAL SHEETS
12	Ora	5	5.6/6.6	11	154

REGISTERED CIVIL ENGINEER DATE 09-13-10

2-14-11
PLANS APPROVAL DATE

REGISTERED PROFESSIONAL ENGINEER
JOSEPH LEE
No. C59058
Exp. 6/30/11
CIVIL
STATE OF CALIFORNIA

THE STATE OF CALIFORNIA OR ITS OFFICERS OR AGENTS SHALL NOT BE RESPONSIBLE FOR THE ACCURACY OR COMPLETENESS OF SCANNED COPIES OF THIS PLAN SHEET.

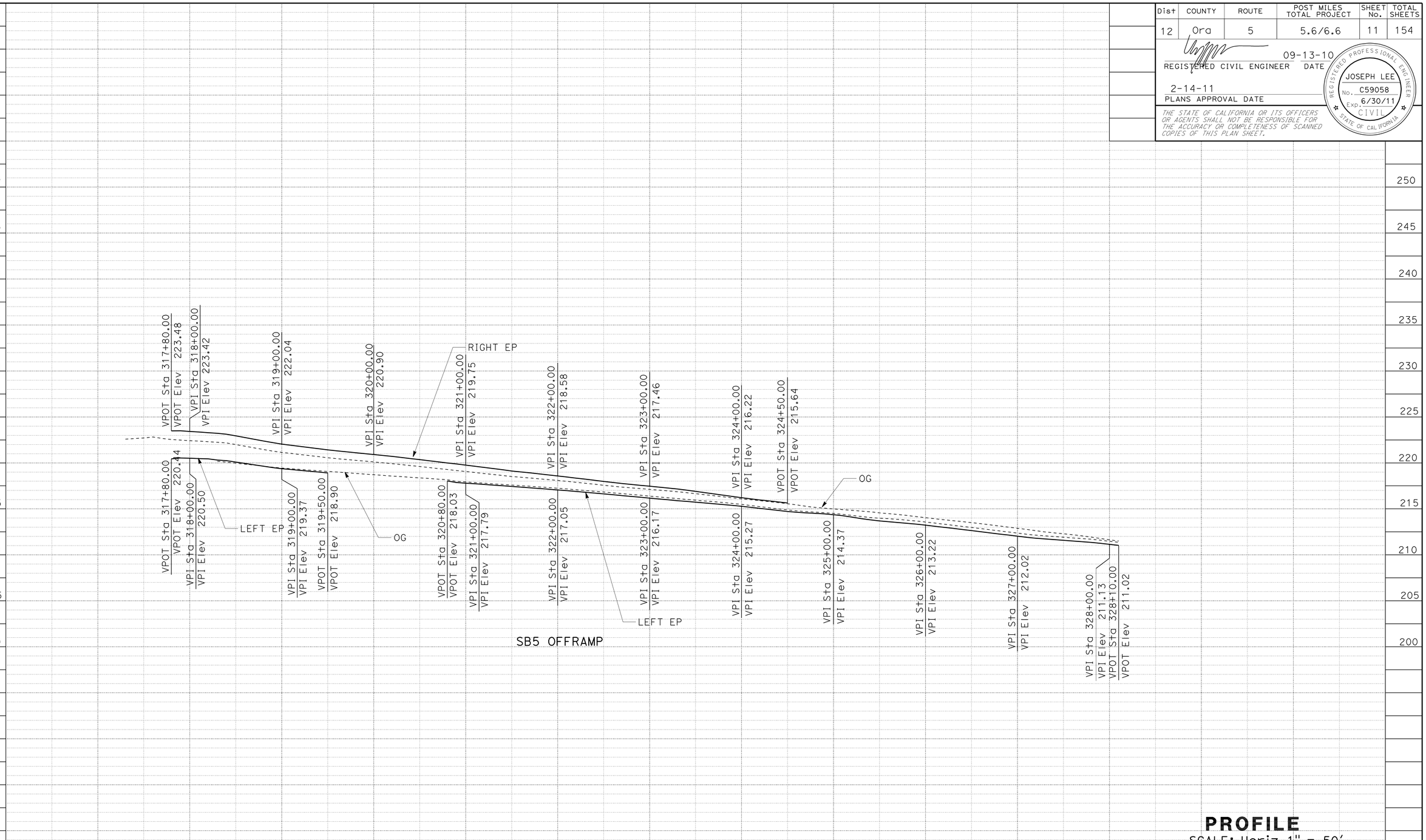

PROFILE
SCALE: Horiz 1" = 50'
Vert 1" = 5'

P-2

STATE OF CALIFORNIA - DEPARTMENT OF TRANSPORTATION
Caltrans
DESIGN

FUNCTIONAL SUPERVISOR: MILI LIM STAMATION

CALCULATED-DESIGNED BY: QUAN TRINH
CHECKED BY: JOSEPH LEE

REVISED BY: 03-18-10
DATE REVISED: 03-18-10

LAST REVISION 03-18-10 | DATE PLOTTED => 16-FEB-2011 | TIME PLOTTED => 16:24

Dist	COUNTY	ROUTE	POST MILES TOTAL PROJECT	SHEET No.	TOTAL SHEETS
12	Ora	5	5.6/6.6	12	154

REGISTERED CIVIL ENGINEER 09-13-10 DATE

2-14-11
PLANS APPROVAL DATE

REGISTERED PROFESSIONAL ENGINEER
JOSEPH LEE
No. C59058
Exp. 6/30/11
CIVIL
STATE OF CALIFORNIA

THE STATE OF CALIFORNIA OR ITS OFFICERS OR AGENTS SHALL NOT BE RESPONSIBLE FOR THE ACCURACY OR COMPLETENESS OF SCANNED COPIES OF THIS PLAN SHEET.

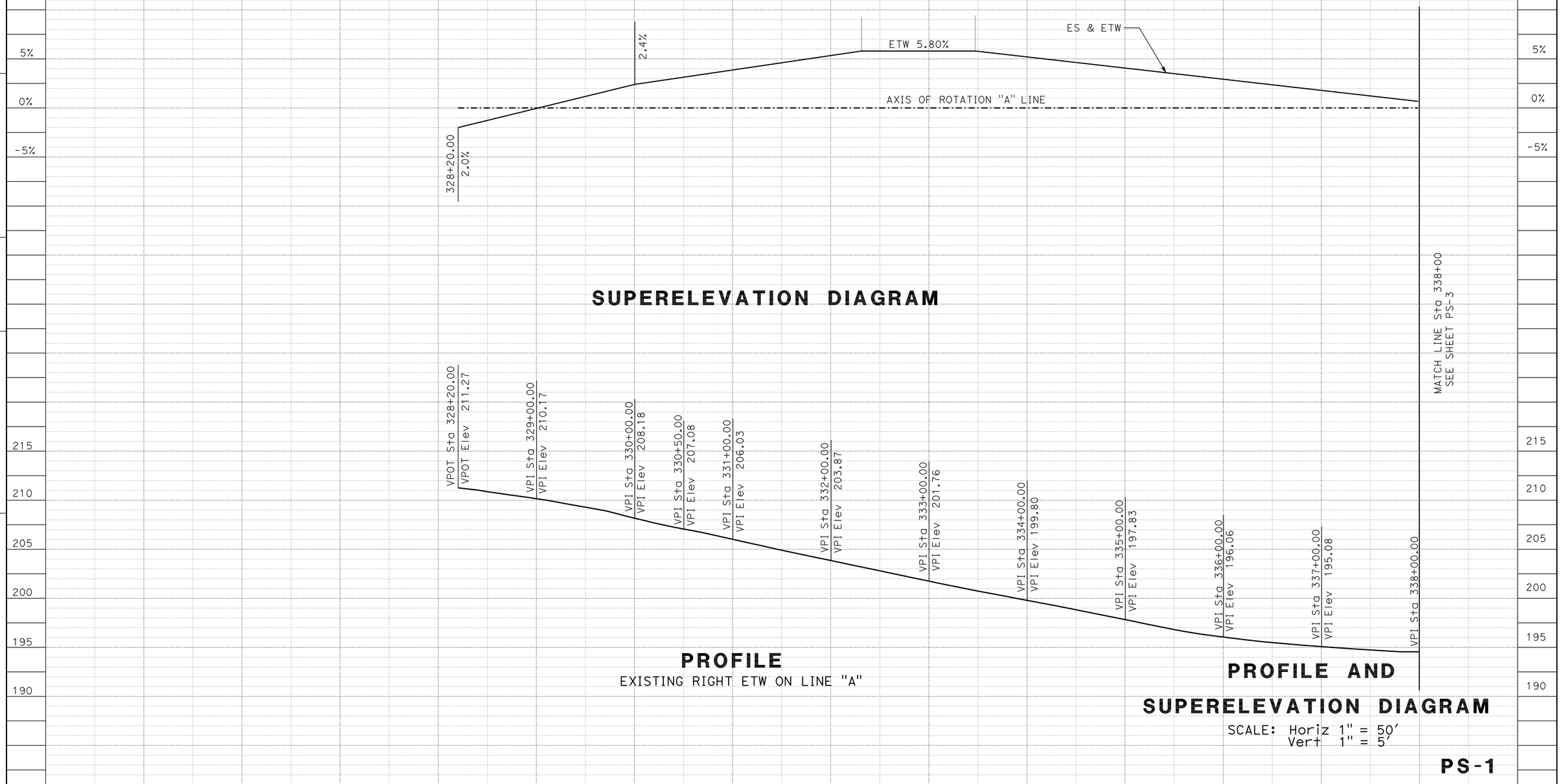

SUPERELEVATION DIAGRAM

PROFILE

EXISTING RIGHT ETW ON LINE "A"

PROFILE AND SUPERELEVATION DIAGRAM

SCALE: Horiz 1" = 50'
Vert 1" = 5'

PS-1

REVISED BY	DATE REVISED
QUAN TRINH	03-18-10
JOSEPH LEE	03-18-10

CALCULATED-DESIGNED BY
CHECKED BY

FUNCTIONAL SUPERVISOR
MILI LIM STAMATION

STATE OF CALIFORNIA - DEPARTMENT OF TRANSPORTATION
Caltrans
DESIGN

LAST REVISION 03-18-10
DATE PLOTTED => 17-FEB-2011
TIME PLOTTED => 10:50

Dist	COUNTY	ROUTE	POST MILES TOTAL PROJECT	SHEET No.	TOTAL SHEETS
12	Ora	5	5.6/6.6	13	154

REGISTERED CIVIL ENGINEER 09-13-10 DATE

2-14-11
PLANS APPROVAL DATE

REGISTERED PROFESSIONAL ENGINEER
JOSEPH LEE
No. C59058
Exp. 6/30/11
CIVIL
STATE OF CALIFORNIA

THE STATE OF CALIFORNIA OR ITS OFFICERS OR AGENTS SHALL NOT BE RESPONSIBLE FOR THE ACCURACY OR COMPLETENESS OF SCANNED COPIES OF THIS PLAN SHEET.

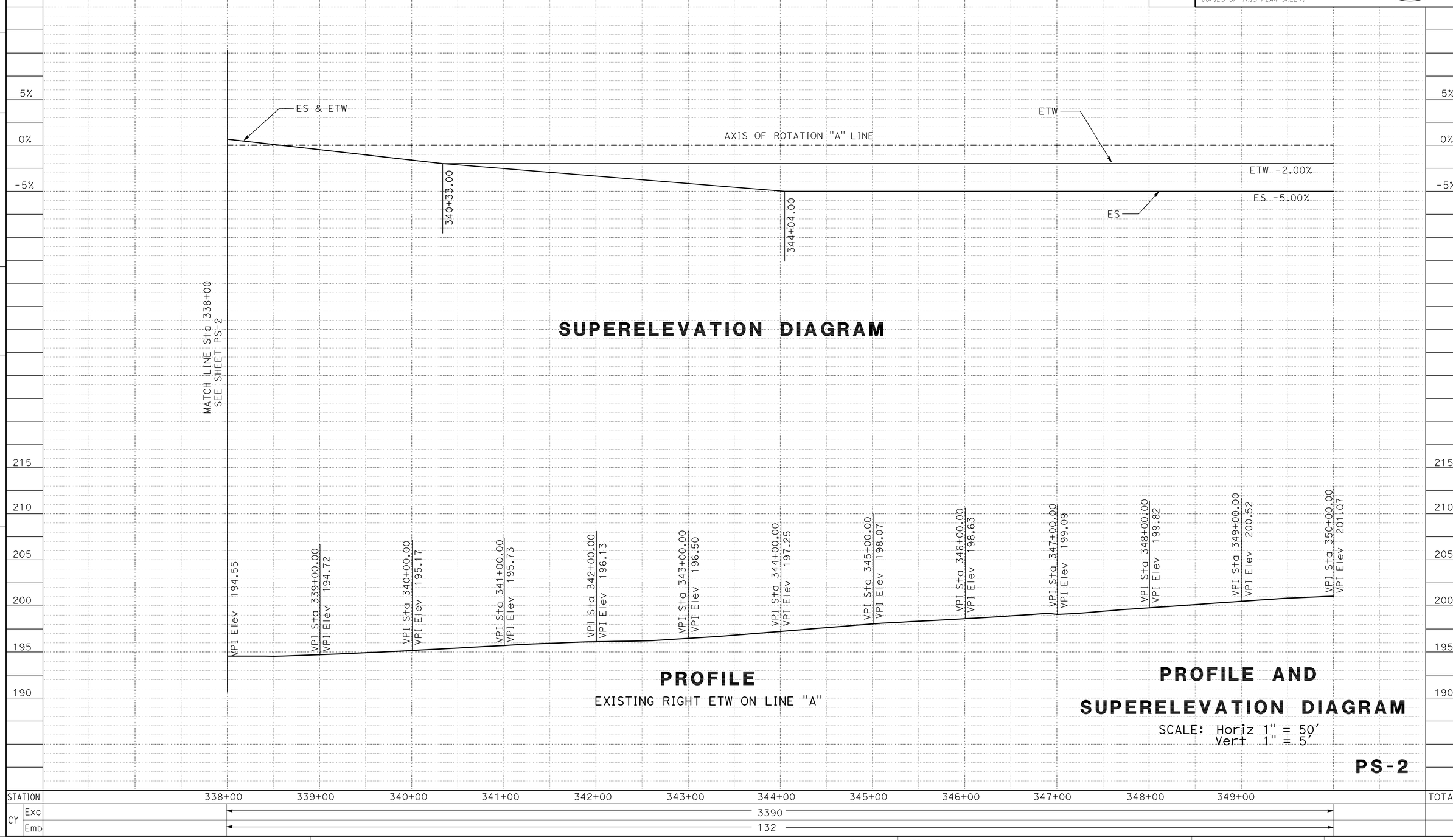

REVISED BY	DATE REVISED
QUAN TRINH	03-18-10
JOSEPH LEE	03-18-10

CALCULATED-DESIGNED BY
CHECKED BY

FUNCTIONAL SUPERVISOR
MILI LIM STAMATION

STATE OF CALIFORNIA - DEPARTMENT OF TRANSPORTATION
Caltrans
DESIGN

LAST REVISION 03-18-10
DATE PLOTTED => 17-FEB-2011
TIME PLOTTED => 10:50

Dist	COUNTY	ROUTE	POST MILES TOTAL PROJECT	SHEET No.	TOTAL SHEETS
12	Ora	5	5.6/6.6	14	154

REGISTERED CIVIL ENGINEER DATE 09-13-10

2-14-11
PLANS APPROVAL DATE

REGISTERED PROFESSIONAL ENGINEER JOSEPH LEE No. C59058 Exp. 6/30/11 CIVIL STATE OF CALIFORNIA

THE STATE OF CALIFORNIA OR ITS OFFICERS OR AGENTS SHALL NOT BE RESPONSIBLE FOR THE ACCURACY OR COMPLETENESS OF SCANNED COPIES OF THIS PLAN SHEET.

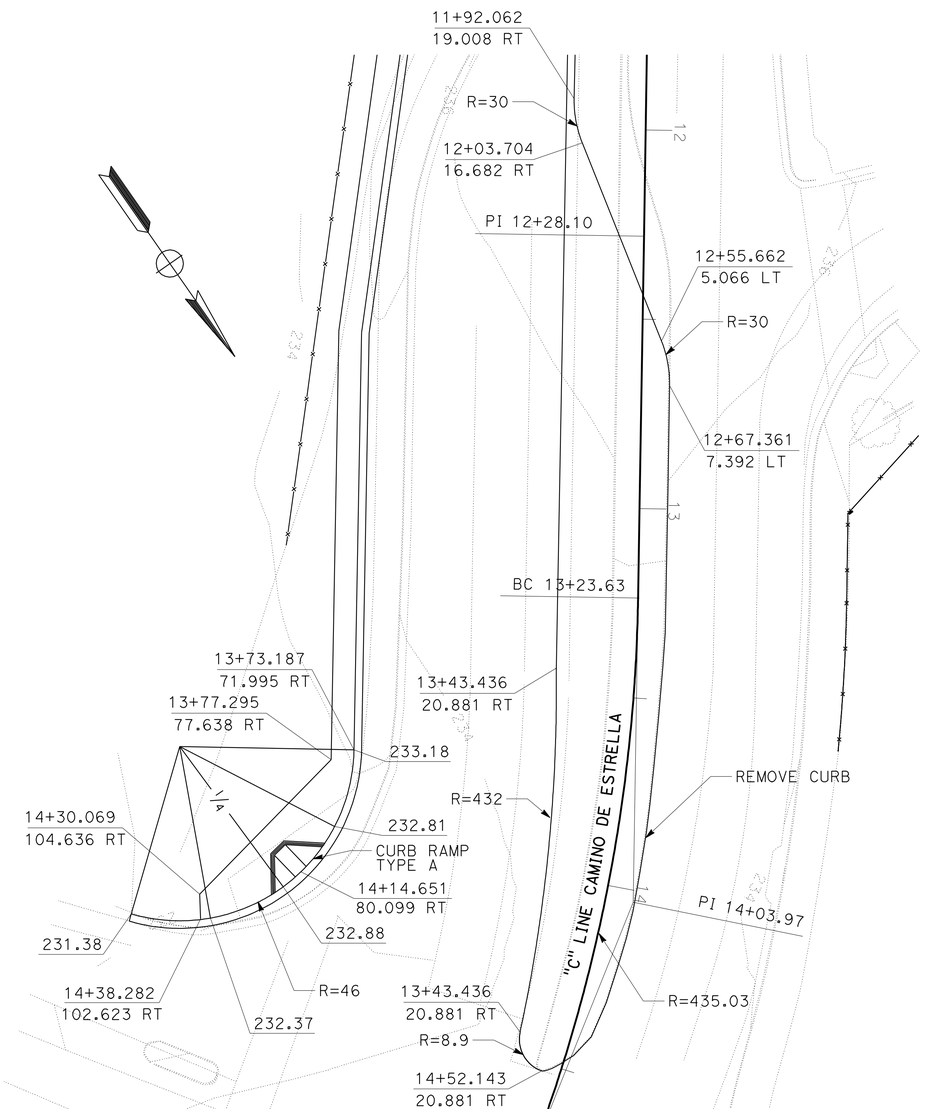

PLAN

CAMINO DE ESTRELLA
AT NB 5 OFFRAMP

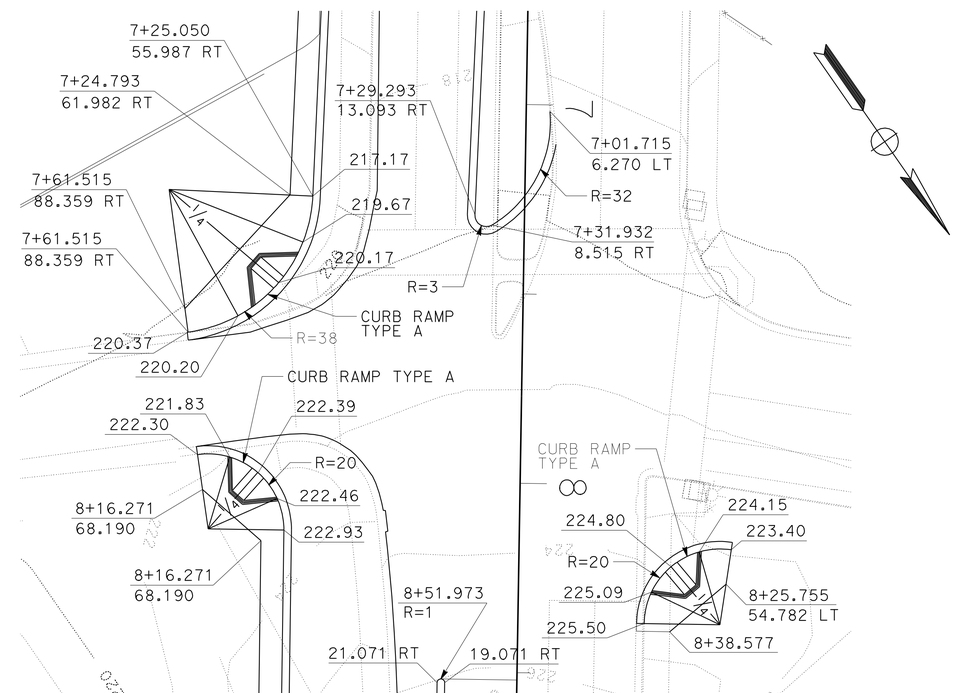

PLAN

CAMINO DE ESTRELLA
AT SB 5 OFFRAMP

CONSTRUCTION DETAILS

SCALE: 1" = 20'

C-1

REVISED BY	DATE REVISED
QUAN TRINH	03-18-10
JOSEPH LEE	03-18-10

CALCULATED-DESIGNED BY
CHECKED BY

FUNCTIONAL SUPERVISOR
MILI LIM STAMATION

STATE OF CALIFORNIA - DEPARTMENT OF TRANSPORTATION
Caltrans
DESIGN

LAST REVISION 03-18-10
DATE PLOTTED => 16-FEB-2011
TIME PLOTTED => 16:24

Dist	COUNTY	ROUTE	POST MILES TOTAL PROJECT	SHEET No.	TOTAL SHEETS
12	Ora	5	5.6/6.6	15	154

REGISTERED CIVIL ENGINEER DATE 09-13-10

2-14-11
PLANS APPROVAL DATE

REGISTERED PROFESSIONAL ENGINEER
JOSEPH LEE
No. C59058
Exp. 6/30/11
CIVIL
STATE OF CALIFORNIA

THE STATE OF CALIFORNIA OR ITS OFFICERS OR AGENTS SHALL NOT BE RESPONSIBLE FOR THE ACCURACY OR COMPLETENESS OF SCANNED COPIES OF THIS PLAN SHEET.

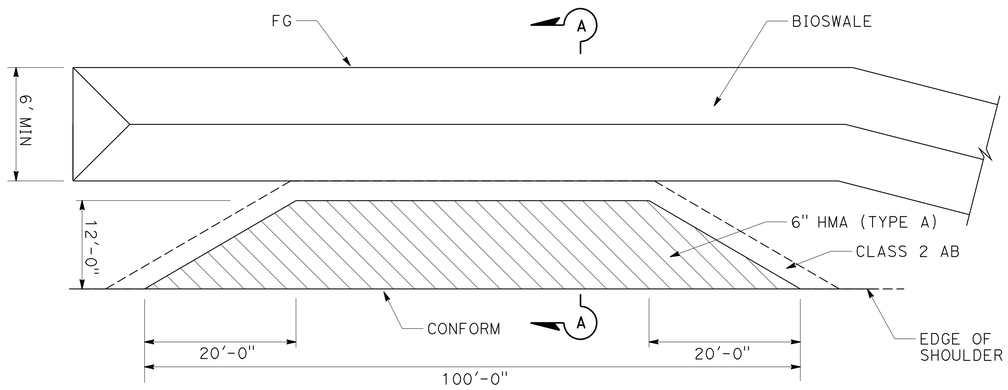

PLAN
MAINTENANCE VEHICLE PULLOUT

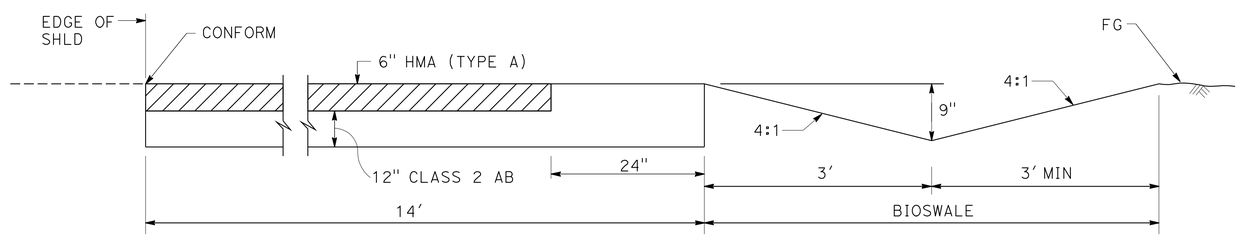

SECTION A-A
MAINTENANCE VEHICLE PULLOUT

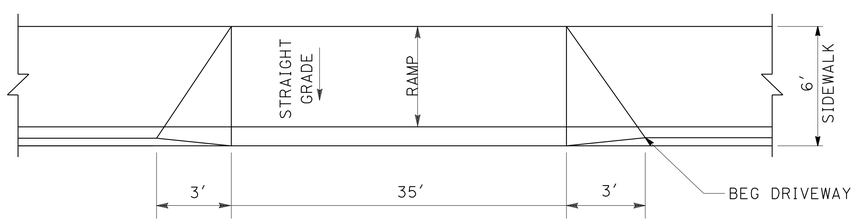

PLAN
DRIVEWAY

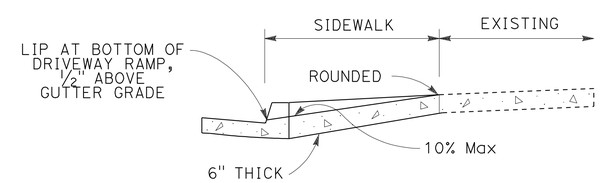

SECTION
DRIVEWAY

CONSTRUCTION DETAILS

SCALE: 1" = 20'

C-2

STATE OF CALIFORNIA - DEPARTMENT OF TRANSPORTATION
Caltrans
DESIGN

FUNCTIONAL SUPERVISOR: MILI LIM STAMATION
CALCULATED-DESIGNED BY: QUAN TRINH
CHECKED BY: JOSEPH LEE
REVISED BY: 03-18-10
DATE REVISED: 03-18-10

LAST REVISION 03-18-10
DATE PLOTTED => 16-FEB-2011
TIME PLOTTED => 16:24

Dist	COUNTY	ROUTE	POST MILES TOTAL PROJECT	SHEET No.	TOTAL SHEETS
12	Ora	5	5.6/6.6	16	154

REGISTERED CIVIL ENGINEER 09-13-10 DATE

2-14-11
PLANS APPROVAL DATE

REGISTERED PROFESSIONAL ENGINEER JOSEPH LEE No. C59058 Exp. 6/30/11 CIVIL STATE OF CALIFORNIA

THE STATE OF CALIFORNIA OR ITS OFFICERS OR AGENTS SHALL NOT BE RESPONSIBLE FOR THE ACCURACY OR COMPLETENESS OF SCANNED COPIES OF THIS PLAN SHEET.

NOTES:

1. FOR ADDITIONAL REMOVALS, SEE
   DRAINAGE PLANS
   UTILITY PLANS
   STAGE CONSTRUCTION PLANS
   PAVEMENT DELINEATION PLANS
   SIGN PLANS
   STRUCTURE PLANS
   ELECTRICAL PLANS
2. FOR ACCURATE RIGHT OF WAY DATA, CONTACT RIGHT OF WAY ENGINEERING AT THE DISTRICT OFFICE.

LEGEND:

REMOVE CONCRETE

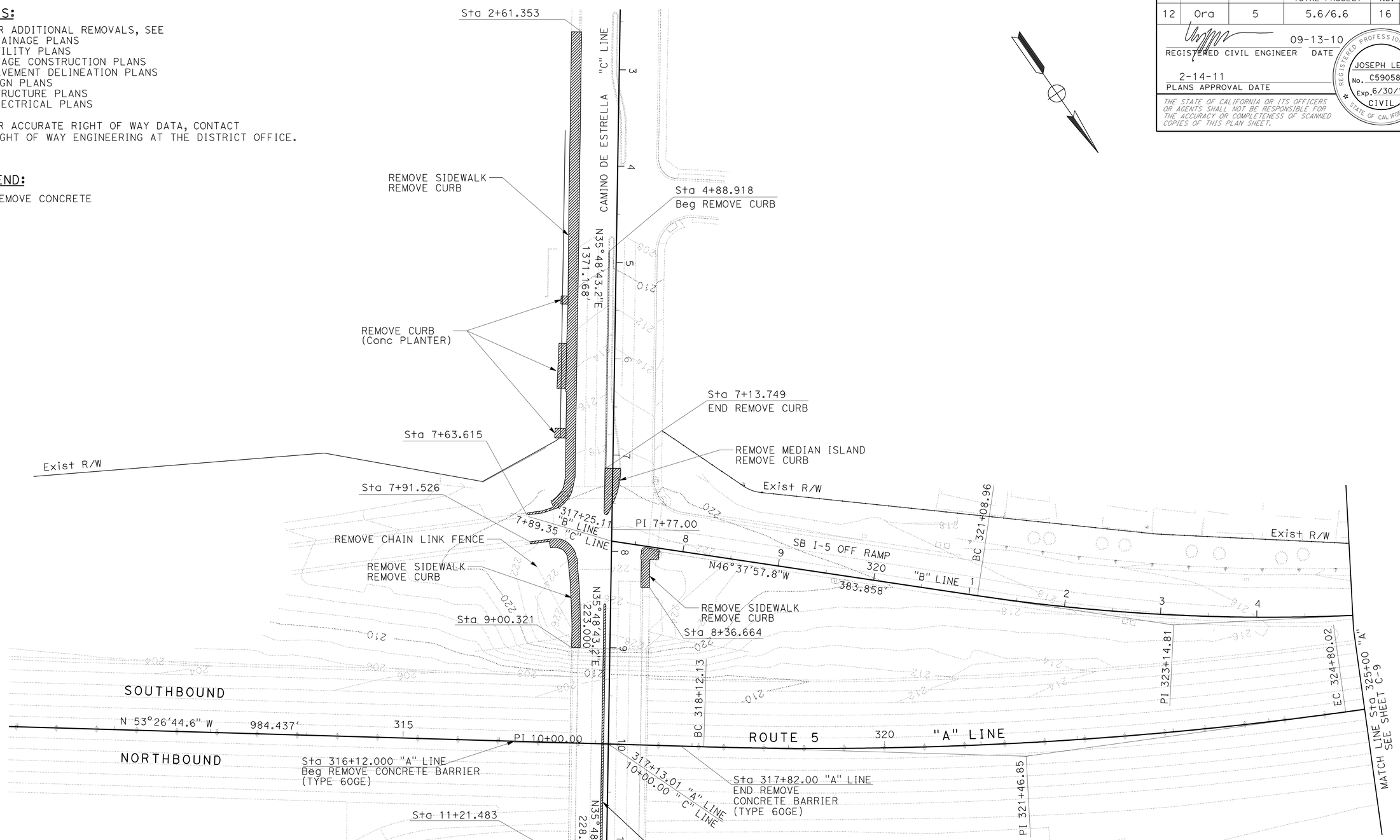

CONSTRUCTION DETAILS
(REMOVALS)

SCALE: 1" = 50'

C-3

REVISED BY	DATE REVISED
QUAN TRINH	03-18-10
JOSEPH LEE	03-18-10

CALCULATED-DESIGNED BY
CHECKED BY

FUNCTIONAL SUPERVISOR
MILI LIM STAMATION

STATE OF CALIFORNIA - DEPARTMENT OF TRANSPORTATION
Caltrans
DESIGN

LAST REVISION 03-18-10
DATE PLOTTED => 17-FEB-2011
TIME PLOTTED => 10:57

Dist	COUNTY	ROUTE	POST MILES TOTAL PROJECT	SHEET No.	TOTAL SHEETS
12	Ora	5	5.6/6.6	17	154

REGISTERED CIVIL ENGINEER DATE 09-13-10

2-14-11
PLANS APPROVAL DATE

REGISTERED PROFESSIONAL ENGINEER
JOSEPH LEE
No. C59058
Exp. 6/30/11
CIVIL
STATE OF CALIFORNIA

THE STATE OF CALIFORNIA OR ITS OFFICERS OR AGENTS SHALL NOT BE RESPONSIBLE FOR THE ACCURACY OR COMPLETENESS OF SCANNED COPIES OF THIS PLAN SHEET.

NOTE:

FOR ACCURATE RIGHT OF WAY DATA, CONTACT
RIGHT OF WAY ENGINEERING AT THE DISTRICT OFFICE.

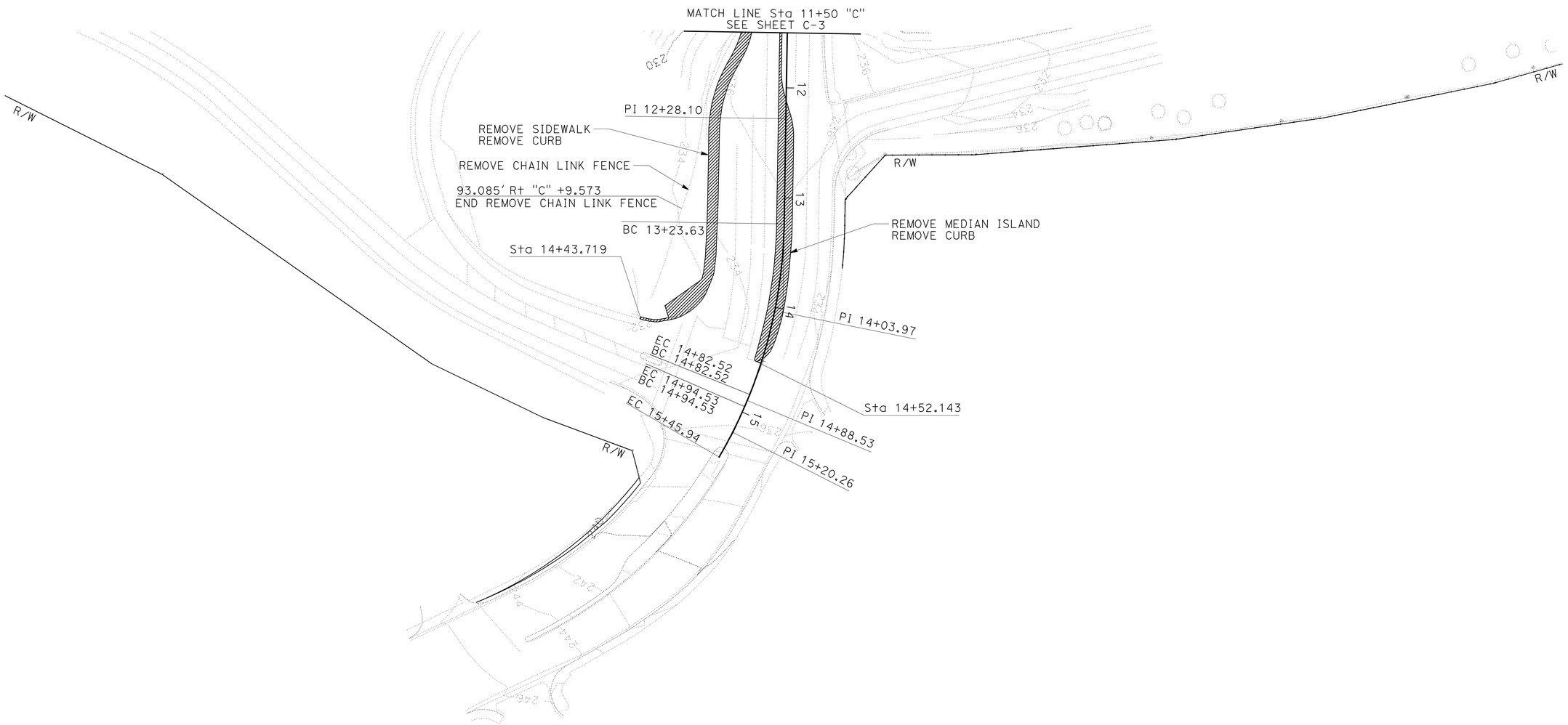

CONSTRUCTION DETAILS
(REMOVALS)

SCALE: 1" = 50'

C-4

STATE OF CALIFORNIA - DEPARTMENT OF TRANSPORTATION
Caltrans
DESIGN

FUNCTIONAL SUPERVISOR: MILI LIM STAMATION

CALCULATED-DESIGNED BY: QUAN TRINH
CHECKED BY: JOSEPH LEE

REVISED BY: 03-18-10
DATE REVISED: 03-18-10

LAST REVISION 03-18-10 | DATE PLOTTED => 17-FEB-2011 | TIME PLOTTED => 10:57

Dist	COUNTY	ROUTE	POST MILES TOTAL PROJECT	SHEET No.	TOTAL SHEETS
12	Ora	5	5.6/6.6	18	154

REGISTERED CIVIL ENGINEER 02-07-11 DATE

2-14-11
PLANS APPROVAL DATE

REGISTERED PROFESSIONAL ENGINEER
JOSEPH LEE
No. C59058
Exp. 6/30/11
CIVIL
STATE OF CALIFORNIA

THE STATE OF CALIFORNIA OR ITS OFFICERS OR AGENTS SHALL NOT BE RESPONSIBLE FOR THE ACCURACY OR COMPLETENESS OF SCANNED COPIES OF THIS PLAN SHEET.

NOTES:

1. LOCATIONS OF ALL TEMPORARY WATER POLLUTION CONTROL ARE APPROXIMATE, EXACT LOCATIONS TO BE DETERMINED BY THE ENGINEER.
2. ALL INLETS RECEIVING RUNOFF FROM DISTURBED SOIL AREAS WILL BE PROTECTED WITH SEDIMENT TRAP INLET PROTECTION
3. FOR ACCURATE RIGHT OF WAY DATA, CONTACT RIGHT OF WAY ENGINEERING AT THE DISTRICT OFFICE.

LEGEND:

- TGBB — TEMPORARY GRAVEL BAG BERM
- TFR — TEMPORARY FIBER ROLL
- TEMPORARY DRAINAGE INLET PROTECTION
- TEMPORARY CONSTRUCTION ENTRANCE
- WASH — TEMPORARY CONCRETE WASHOUT BIN
- TEMPORARY HYDRAULIC MULCH (BONDED FIBER MATRIX)

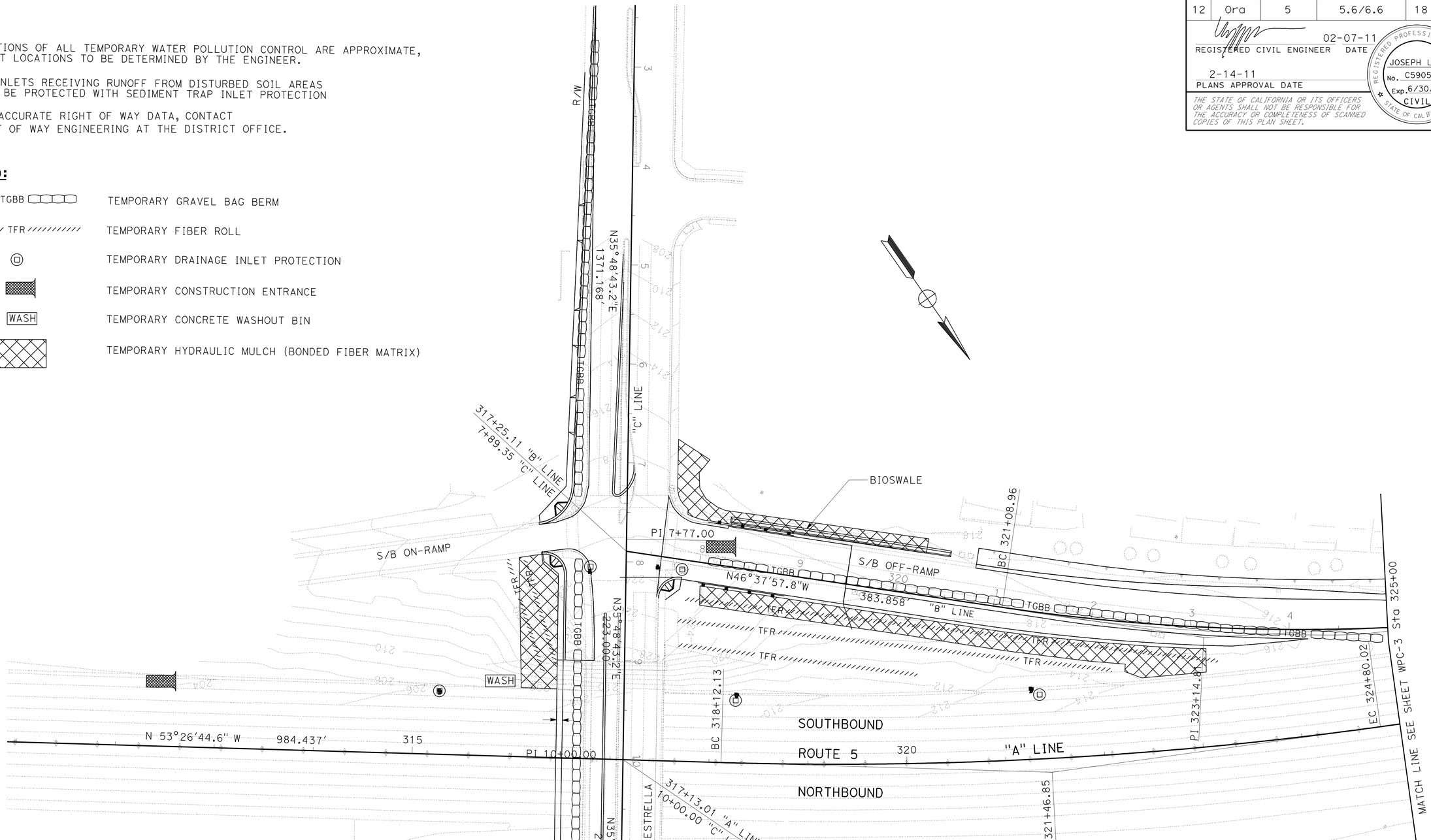

TEMPORARY WATER POLLUTION CONTROL PLAN

SCALE: 1" = 50'

THIS PLAN ACCURATE FOR TEMPORARY WATER POLLUTION CONTROL WORK ONLY

WPC-1

REVISED BY	DATE REVISED
JOSEPH LEE	03-18-10

CALCULATED-DESIGNED BY
CHECKED BY

FUNCTIONAL SUPERVISOR
MILI LIM STAMATION

STATE OF CALIFORNIA - DEPARTMENT OF TRANSPORTATION
Caltrans
DESIGN

LAST REVISION 02-03-11
DATE PLOTTED => 17-FEB-2011
TIME PLOTTED => 10:57

Dist	COUNTY	ROUTE	POST MILES TOTAL PROJECT	SHEET No.	TOTAL SHEETS
12	Ora	5	5.6/6.6	19	154

REGISTERED CIVIL ENGINEER DATE 02-07-11

PLANS APPROVAL DATE 2-14-11

REGISTERED PROFESSIONAL ENGINEER JOSEPH LEE No. C59058 Exp. 6/30/11 CIVIL STATE OF CALIFORNIA

THE STATE OF CALIFORNIA OR ITS OFFICERS OR AGENTS SHALL NOT BE RESPONSIBLE FOR THE ACCURACY OR COMPLETENESS OF SCANNED COPIES OF THIS PLAN SHEET.

NOTE:

FOR ACCURATE RIGHT OF WAY DATA, CONTACT RIGHT OF WAY ENGINEERING AT THE DISTRICT OFFICE.

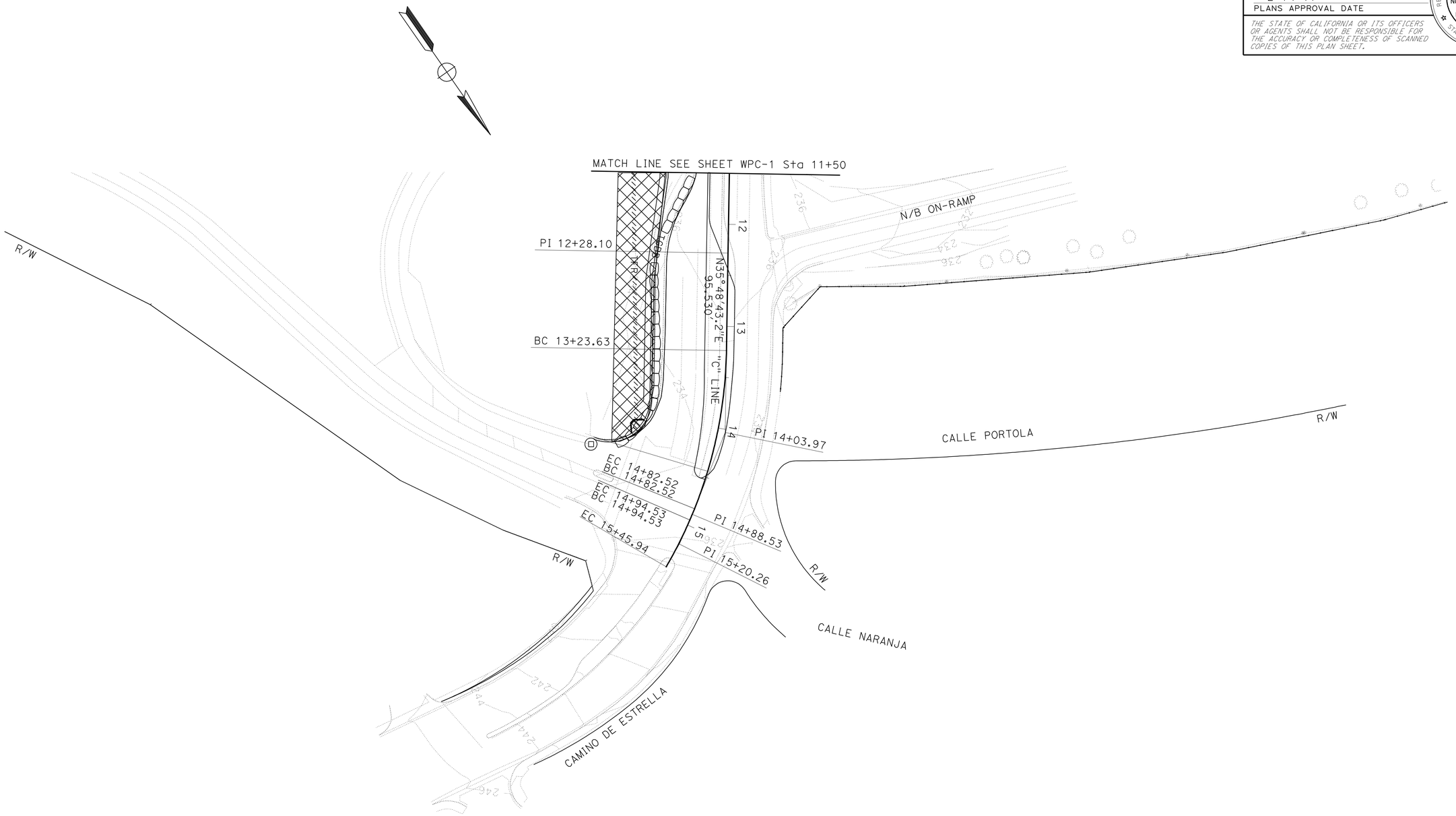

TEMPORARY WATER POLUTION CONTROL PLAN

SCALE: 1" = 50'

WPC-2

THIS PLAN ACCURATE FOR TEMPORARY WATER POLLUTION CONTROL WORK ONLY

STATE OF CALIFORNIA - DEPARTMENT OF TRANSPORTATION

Caltrans

DESIGN

FUNCTIONAL SUPERVISOR: MILI LIM STAMATION

CALCULATED-DESIGNED BY: JOSEPH LEE

CHECKED BY

REVISED BY

DATE REVISED 03/18/10

LAST REVISION 02-03-11

DATE PLOTTED => 17-FEB-2011

TIME PLOTTED => 10:57

Dist	COUNTY	ROUTE	POST MILES TOTAL PROJECT	SHEET No.	TOTAL SHEETS
12	Ora	5	5.6/6.6	20	154

REGISTERED CIVIL ENGINEER 02-07-11 DATE

2-14-11
PLANS APPROVAL DATE

REGISTERED PROFESSIONAL ENGINEER
JOSEPH LEE
No. C59058
Exp. 6/30/11
CIVIL
STATE OF CALIFORNIA

THE STATE OF CALIFORNIA OR ITS OFFICERS OR AGENTS SHALL NOT BE RESPONSIBLE FOR THE ACCURACY OR COMPLETENESS OF SCANNED COPIES OF THIS PLAN SHEET.

NOTE:

FOR ACCURATE RIGHT OF WAY DATA, CONTACT
RIGHT OF WAY ENGINEERING AT THE DISTRICT OFFICE.

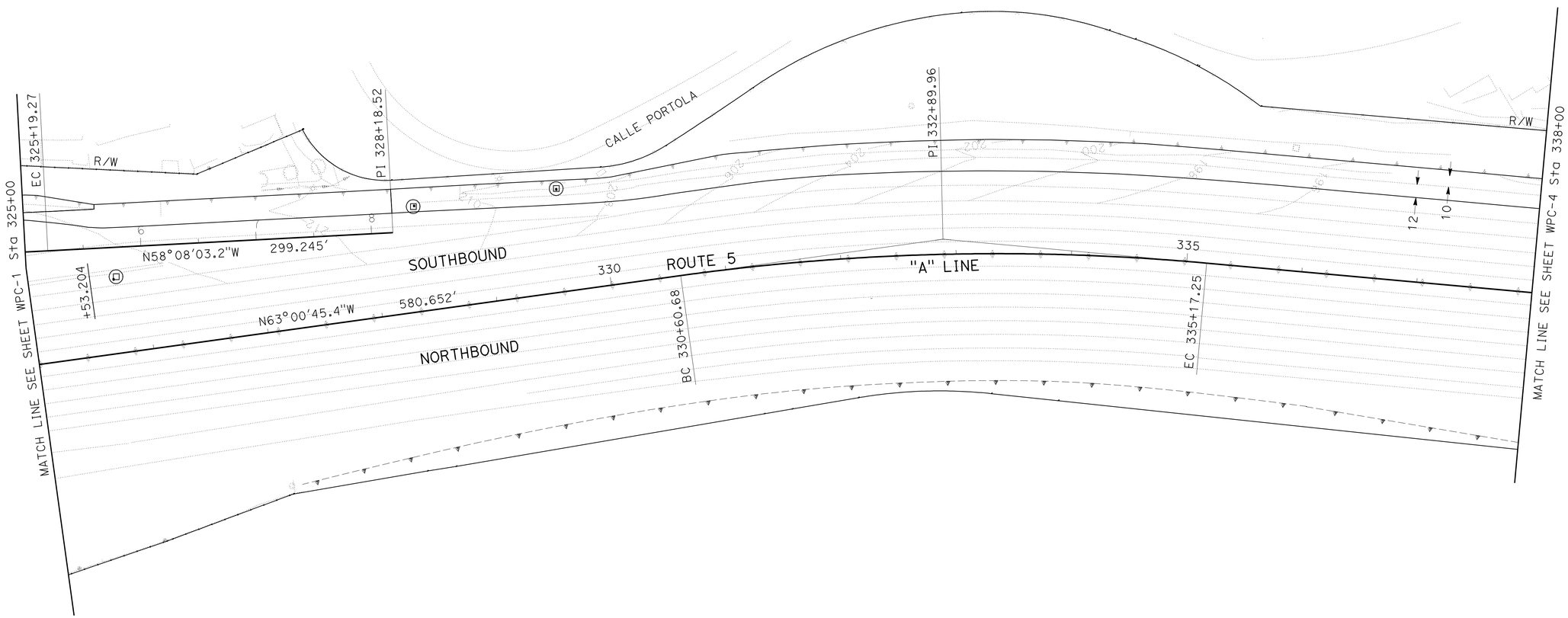

TEMPORARY WATER POLLUTION CONTROL PLAN

SCALE: 1" = 50'

WPC-3

THIS PLAN ACCURATE FOR TEMPORARY WATER POLLUTION CONTROL WORK ONLY

STATE OF CALIFORNIA - DEPARTMENT OF TRANSPORTATION
Caltrans
DESIGN

FUNCTIONAL SUPERVISOR: MILI LIM STAMATION

CALCULATED-DESIGNED BY: JOSEPH LEE
CHECKED BY:

REVISED BY:
DATE REVISED: 03-18-10

LAST REVISION 02-03-11
DATE PLOTTED => 17-FEB-2011
TIME PLOTTED => 10:57

Dist	COUNTY	ROUTE	POST MILES TOTAL PROJECT	SHEET No.	TOTAL SHEETS
12	Ora	5	5.6/6.6	21	154

REGISTERED CIVIL ENGINEER 02-07-11 DATE

2-14-11
PLANS APPROVAL DATE

REGISTERED PROFESSIONAL ENGINEER
JOSEPH LEE
No. C59058
Exp. 6/30/11
CIVIL
STATE OF CALIFORNIA

THE STATE OF CALIFORNIA OR ITS OFFICERS OR AGENTS SHALL NOT BE RESPONSIBLE FOR THE ACCURACY OR COMPLETENESS OF SCANNED COPIES OF THIS PLAN SHEET.

NOTE:

FOR ACCURATE RIGHT OF WAY DATA, CONTACT RIGHT OF WAY ENGINEERING AT THE DISTRICT OFFICE.

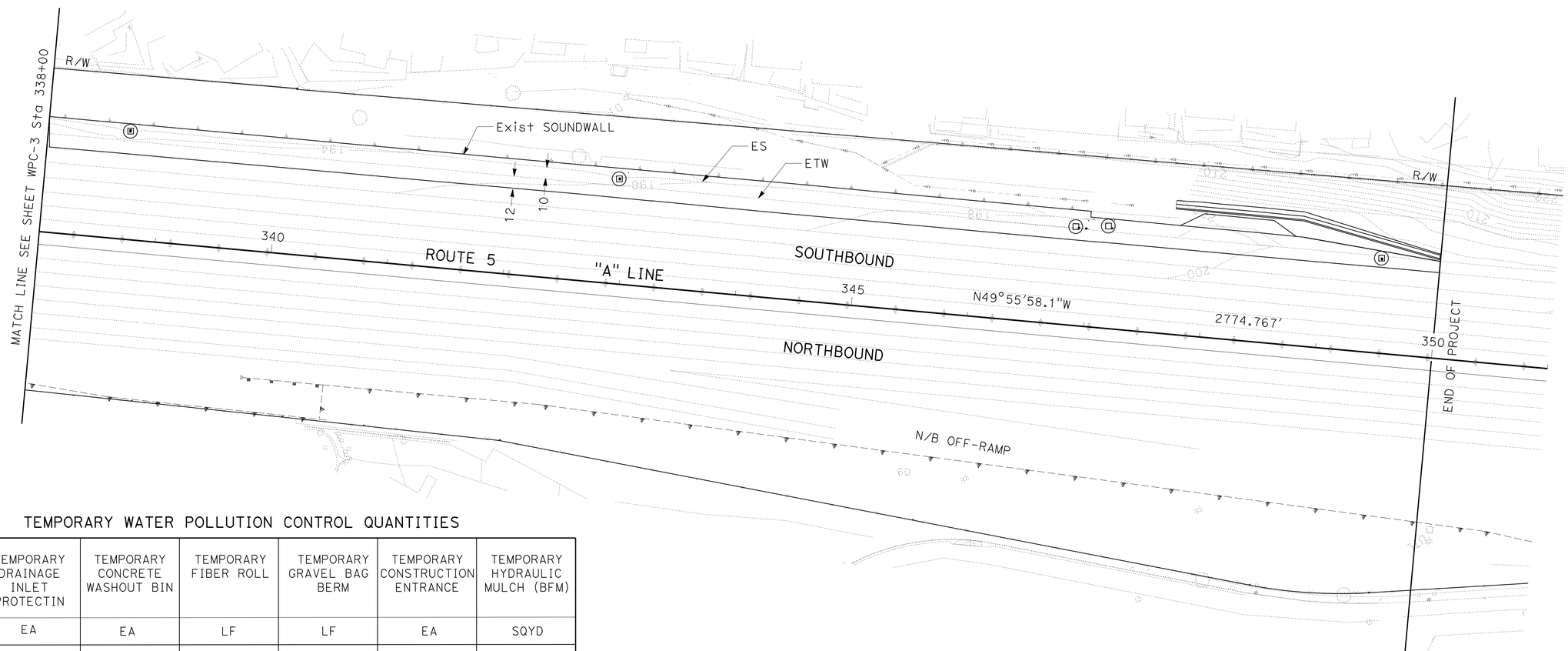

TEMPORARY WATER POLLUTION CONTROL QUANTITIES

SHEET No.	TEMPORARY DRAINAGE INLET PROTECTIN	TEMPORARY CONCRETE WASHOUT BIN	TEMPORARY FIBER ROLL	TEMPORARY GRAVEL BAG BERM	TEMPORARY CONSTRUCTION ENTRANCE	TEMPORARY HYDRAULIC MULCH (BFM)
	EA	EA	LF	LF	EA	SQYD
WPC-1	5	1	1605	1670	2	2492
WPC-2	1		360	285		1145
WPC-3	3					
WPC-4	5					
TOTAL	14	1	1965	1955	2	3637

TEMPORARY WATER POLLUTION CONTROL PLAN AND QUANTITIES

SCALE: 1" = 50'

THIS PLAN ACCURATE FOR TEMPORARY WATER POLLUTION CONTROL WORK ONLY

WPC-4

STATE OF CALIFORNIA - DEPARTMENT OF TRANSPORTATION
Caltrans
DESIGN

FUNCTIONAL SUPERVISOR: MILI LIM STAMATION
CALCULATED-DESIGNED BY: JOSEPH LEE
CHECKED BY:
REVISED BY:
DATE REVISED: 03-18-10

LAST REVISION 02-03-11
DATE PLOTTED => 17-FEB-2011
TIME PLOTTED => 10:57

Dist	COUNTY	ROUTE	POST MILES TOTAL PROJECT	SHEET No.	TOTAL SHEETS
12	Ora	5	5.6/6.6	22	154

REGISTERED CIVIL ENGINEER 09-13-10 DATE

2-14-11
PLANS APPROVAL DATE

REGISTERED PROFESSIONAL ENGINEER
JOSEPH LEE
No. C59058
Exp. 6/30/11
CIVIL
STATE OF CALIFORNIA

THE STATE OF CALIFORNIA OR ITS OFFICERS OR AGENTS SHALL NOT BE RESPONSIBLE FOR THE ACCURACY OR COMPLETENESS OF SCANNED COPIES OF THIS PLAN SHEET.

NOTE:

FOR ACCURATE RIGHT OF WAY DATA, CONTACT RIGHT OF WAY ENGINEERING AT THE DISTRICT OFFICE.

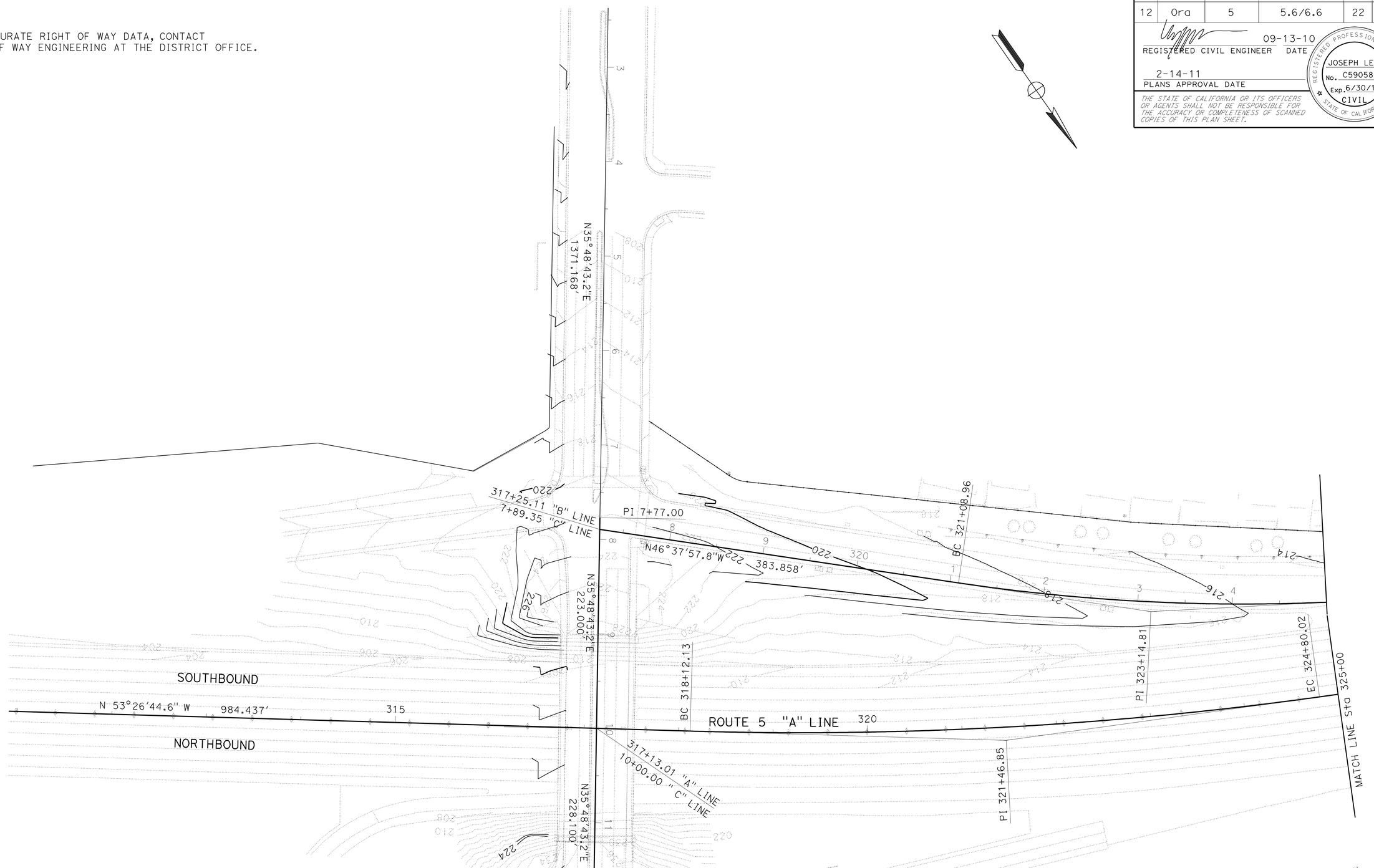

THIS PLAN ACCURATE FOR CONTOUR GRADING WORK ONLY

CONTOUR GRADING

SCALE: 1" = 50'

G-1

STATE OF CALIFORNIA - DEPARTMENT OF TRANSPORTATION
Caltrans
DESIGN

FUNCTIONAL SUPERVISOR: MILI LIM STAMATION
CALCULATED-DESIGNED BY: QUAN TRINH
CHECKED BY: JOSEPH LEE
REVISED BY: 03-18-10
DATE REVISED: 03-18-10

LAST REVISION 03-18-10
DATE PLOTTED => 17-FEB-2011
TIME PLOTTED => 11:03

Dist	COUNTY	ROUTE	POST MILES TOTAL PROJECT	SHEET No.	TOTAL SHEETS
12	Ora	5	5.6/6.6	23	154

REGISTERED CIVIL ENGINEER 09-13-10 DATE

2-14-11
PLANS APPROVAL DATE

REGISTERED PROFESSIONAL ENGINEER
JOSEPH LEE
No. C59058
Exp. 6/30/11
CIVIL
STATE OF CALIFORNIA

THE STATE OF CALIFORNIA OR ITS OFFICERS OR AGENTS SHALL NOT BE RESPONSIBLE FOR THE ACCURACY OR COMPLETENESS OF SCANNED COPIES OF THIS PLAN SHEET.

NOTE:

FOR ACCURATE RIGHT OF WAY DATA, CONTACT
RIGHT OF WAY ENGINEERING AT THE DISTRICT OFFICE.

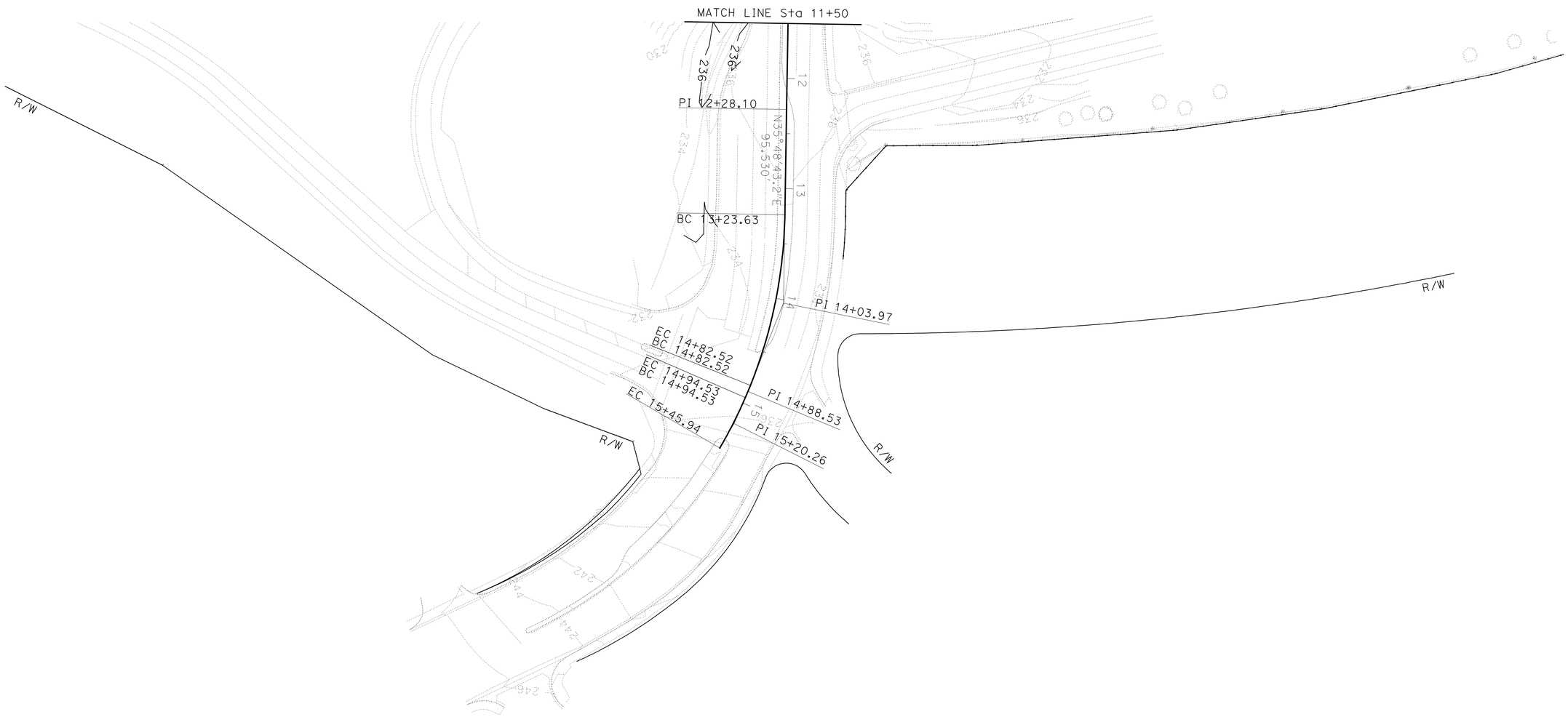

CONTOUR GRADING

SCALE: 1" = 50'

G-2

THIS PLAN ACCURATE FOR CONTOUR GRADING WORK ONLY

REVISED BY	DATE REVISED
QUAN TRINH	03-18-10
JOSEPH LEE	03-18-10

CALCULATED-DESIGNED BY
CHECKED BY

FUNCTIONAL SUPERVISOR
MILI LIM STAMATION

STATE OF CALIFORNIA - DEPARTMENT OF TRANSPORTATION
Caltrans
DESIGN

LAST REVISION 03-18-10
DATE PLOTTED => 17-FEB-2011
TIME PLOTTED => 11:03

Dist	COUNTY	ROUTE	POST MILES TOTAL PROJECT	SHEET No.	TOTAL SHEETS
12	Ora	5	5.6/6.6	24	154

REGISTERED CIVIL ENGINEER DATE 09-13-10

2-14-11
PLANS APPROVAL DATE

REGISTERED PROFESSIONAL ENGINEER
JOSEPH LEE
No. C59058
Exp. 6/30/11
CIVIL
STATE OF CALIFORNIA

THE STATE OF CALIFORNIA OR ITS OFFICERS OR AGENTS SHALL NOT BE RESPONSIBLE FOR THE ACCURACY OR COMPLETENESS OF SCANNED COPIES OF THIS PLAN SHEET.

NOTE:

FOR ACCURATE RIGHT OF WAY DATA, CONTACT
RIGHT OF WAY ENGINEERING AT THE DISTRICT OFFICE.

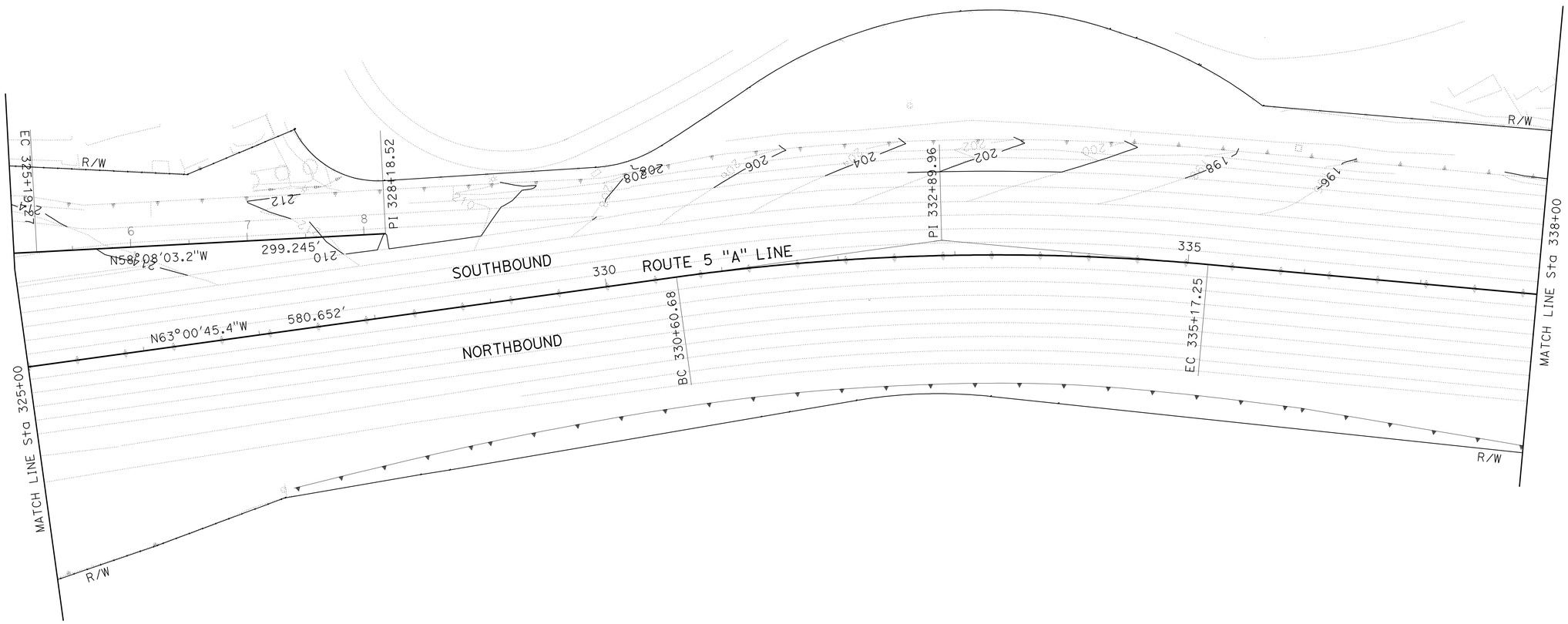

CONTOUR GRADING

SCALE: 1" = 50'

G-3

THIS PLAN ACCURATE FOR CONTOUR GRADING WORK ONLY

STATE OF CALIFORNIA - DEPARTMENT OF TRANSPORTATION
Caltrans
DESIGN

FUNCTIONAL SUPERVISOR: MILI LIM STAMATION

CALCULATED-DESIGNED BY: QUAN TRINH
CHECKED BY: JOSEPH LEE

REVISED BY: 03-18-10
DATE REVISED: 03-18-10

LAST REVISION 03-18-10 | DATE PLOTTED => 17-FEB-2011 | TIME PLOTTED => 11:03

Dist	COUNTY	ROUTE	POST MILES TOTAL PROJECT	SHEET No.	TOTAL SHEETS
12	Ora	5	5.6/6.6	25	154

REGISTERED CIVIL ENGINEER 09-13-10 DATE

2-14-11
PLANS APPROVAL DATE

REGISTERED PROFESSIONAL ENGINEER
JOSEPH LEE
No. C59058
Exp. 6/30/11
CIVIL
STATE OF CALIFORNIA

THE STATE OF CALIFORNIA OR ITS OFFICERS OR AGENTS SHALL NOT BE RESPONSIBLE FOR THE ACCURACY OR COMPLETENESS OF SCANNED COPIES OF THIS PLAN SHEET.

NOTE:

FOR ACCURATE RIGHT OF WAY DATA, CONTACT
RIGHT OF WAY ENGINEERING AT THE DISTRICT OFFICE.

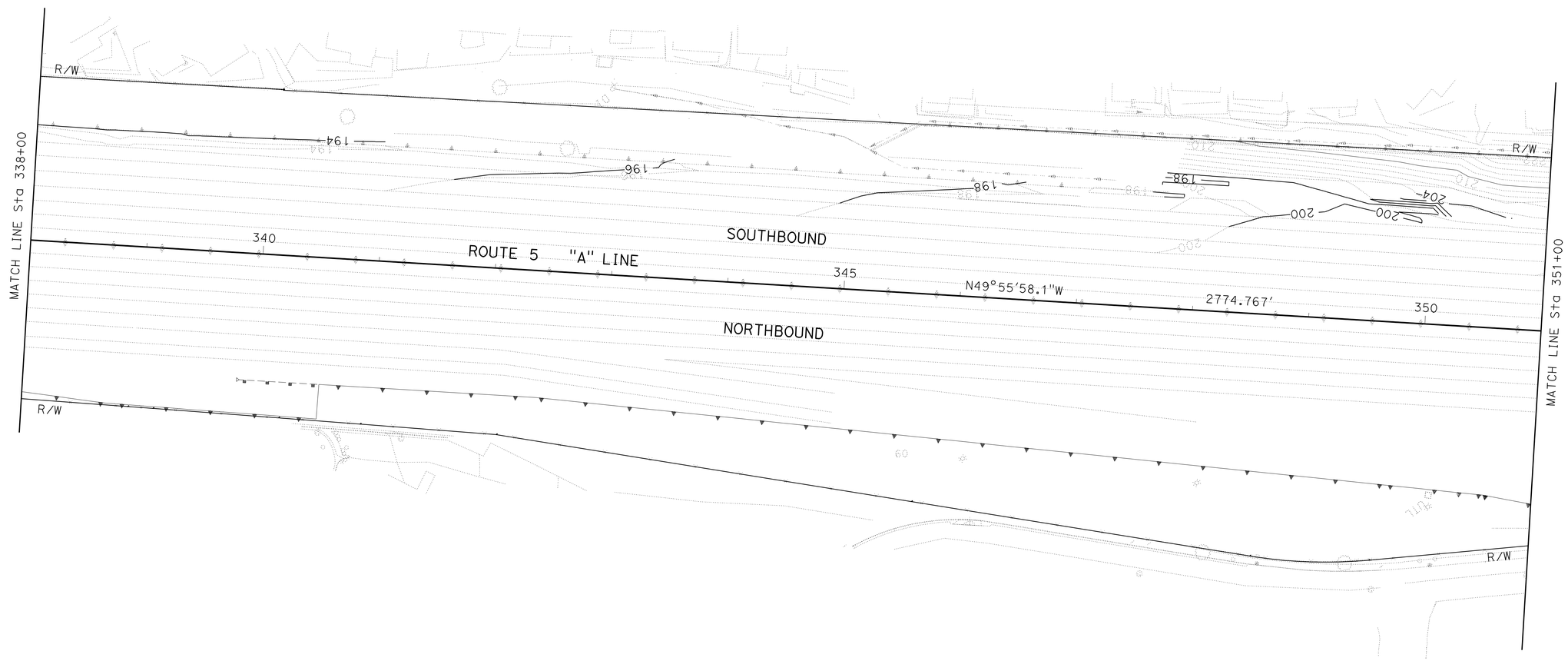

CONTOUR GRADING

SCALE: 1" = 50'

G-4

THIS PLAN ACCURATE FOR CONTOUR GRADING WORK ONLY

REVISED BY	DATE REVISED
03-18-10	03-18-10

CALCULATED-DESIGNED BY: QUAN TRINH
CHECKED BY: JOSEPH LEE
FUNCTIONAL SUPERVISOR: MILI LIM STAMATION

STATE OF CALIFORNIA - DEPARTMENT OF TRANSPORTATION
Caltrans®
DESIGN

LAST REVISION 03-18-10
DATE PLOTTED => 17-FEB-2011
TIME PLOTTED => 11:03

Dist	COUNTY	ROUTE	POST MILES TOTAL PROJECT	SHEET No.	TOTAL SHEETS
12	Ora	5	5.6/6.6	26	154

REGISTERED CIVIL ENGINEER 09-13-10 DATE

2-14-11
PLANS APPROVAL DATE

REGISTERED PROFESSIONAL ENGINEER
PHI DINH
No. C61179
Exp. 06/30/11
CIVIL
STATE OF CALIFORNIA

THE STATE OF CALIFORNIA OR ITS OFFICERS OR AGENTS SHALL NOT BE RESPONSIBLE FOR THE ACCURACY OR COMPLETENESS OF SCANNED COPIES OF THIS PLAN SHEET.

NOTE:

FOR ACCURATE RIGHT OF WAY DATA, CONTACT RIGHT OF WAY ENGINEERING AT THE DISTRICT OFFICE.

LEGEND:

(x) DRAINAGE SYSTEM No.

(x) DRAINAGE UNIT No.

ABBREVIATION:

S - SLOPE

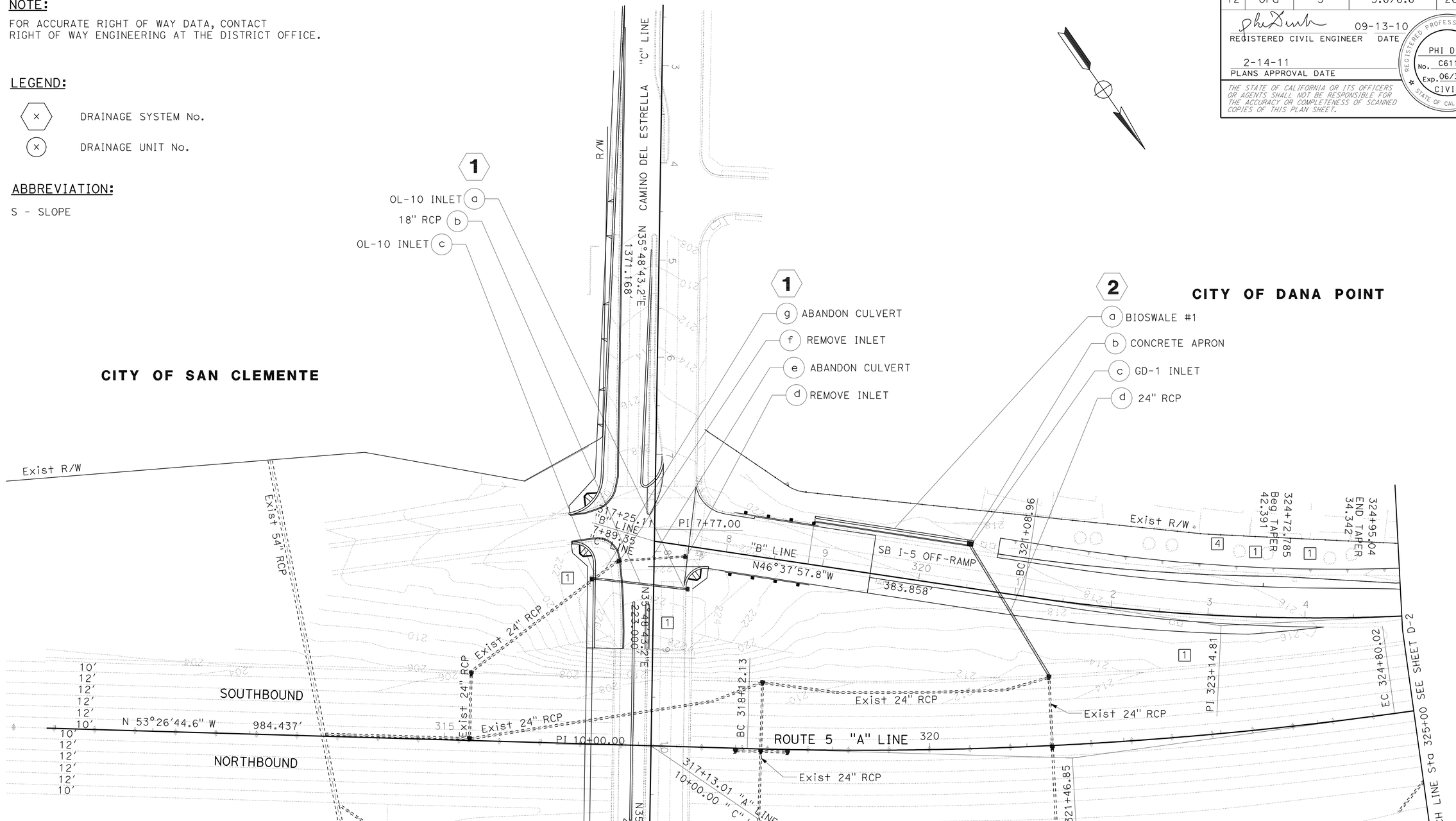

THIS PLAN ACCURATE FOR DRAINAGE WORK ONLY

DRAINAGE PLAN

SCALE: 1" = 50'

D-1

STATE OF CALIFORNIA - DEPARTMENT OF TRANSPORTATION
Caltrans
HYDRAULICS

FUNCTIONAL SUPERVISOR: ROGER KAO

CALCULATED-DESIGNED BY: PHI DINH
CHECKED BY: PHUONG NGUYEN

REVISED BY: PHI DINH
DATE REVISED: 04-13-10

LAST REVISION 04-15-10
DATE PLOTTED => 17-FEB-2011
TIME PLOTTED => 11:03

Dist	COUNTY	ROUTE	POST MILES TOTAL PROJECT	SHEET No.	TOTAL SHEETS
12	Ora	5	5.6/6.6	27	154

REGISTERED CIVIL ENGINEER 09-13-10 DATE

2-14-11
PLANS APPROVAL DATE

REGISTERED PROFESSIONAL ENGINEER
PHI DINH
No. C61179
Exp. 06/30/11
CIVIL
STATE OF CALIFORNIA

THE STATE OF CALIFORNIA OR ITS OFFICERS OR AGENTS SHALL NOT BE RESPONSIBLE FOR THE ACCURACY OR COMPLETENESS OF SCANNED COPIES OF THIS PLAN SHEET.

NOTE:

FOR ACCURATE RIGHT OF WAY DATA, CONTACT
RIGHT OF WAY ENGINEERING AT THE DISTRICT OFFICE.

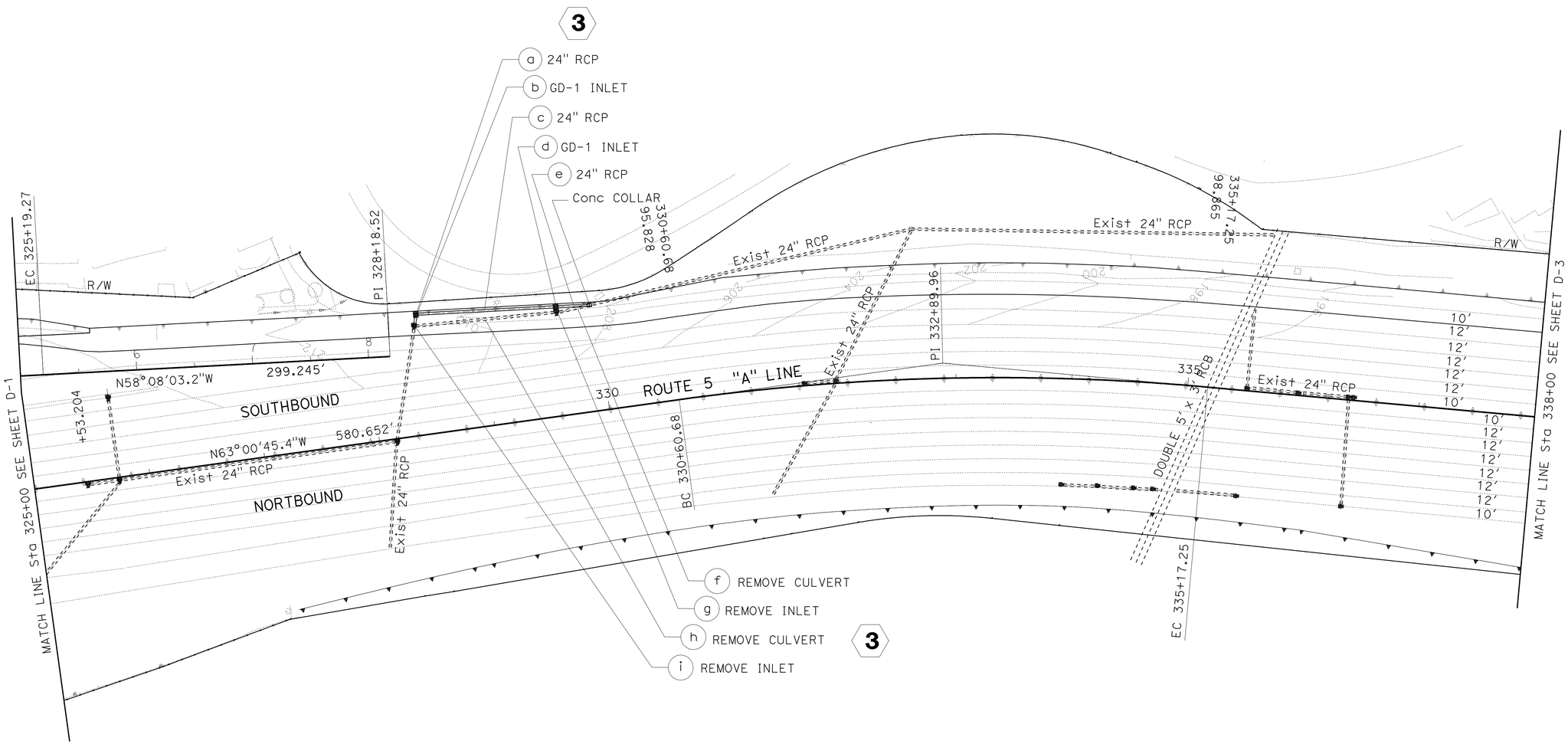

DRAINAGE PLAN

SCALE: 1" = 50'

D-2

THIS PLAN ACCURATE FOR DRAINAGE WORK ONLY

STATE OF CALIFORNIA - DEPARTMENT OF TRANSPORTATION
Caltrans
HYDRAULICS

FUNCTIONAL SUPERVISOR: ROGER KAO
CALCULATED-DESIGNED BY: PHI DINH
CHECKED BY:
REVISED BY: PHI DINH
DATE REVISED: 04-13-10

LAST REVISION 04-15-10 | DATE PLOTTED => 17-FEB-2011 | TIME PLOTTED => 11:03

BORDER LAST REVISED 4/11/2008 | RELATIVE BORDER SCALE IS IN INCHES 0 1 2 3 | USERNAME => trmikesl | DGN FILE => c0f060ia002.dgn | CU 12310 | EA 0F0601

Dist	COUNTY	ROUTE	POST MILES TOTAL PROJECT	SHEET No.	TOTAL SHEETS
12	Ora	5	5.6/6.6	28	154

REGISTERED CIVIL ENGINEER 09-13-10 DATE

2-14-11
PLANS APPROVAL DATE

REGISTERED PROFESSIONAL ENGINEER PHI DINH No. C61179 Exp. 06/30/11 CIVIL STATE OF CALIFORNIA

THE STATE OF CALIFORNIA OR ITS OFFICERS OR AGENTS SHALL NOT BE RESPONSIBLE FOR THE ACCURACY OR COMPLETENESS OF SCANNED COPIES OF THIS PLAN SHEET.

NOTE:

FOR ACCURATE RIGHT OF WAY DATA, CONTACT RIGHT OF WAY ENGINEERING AT THE DISTRICT OFFICE.

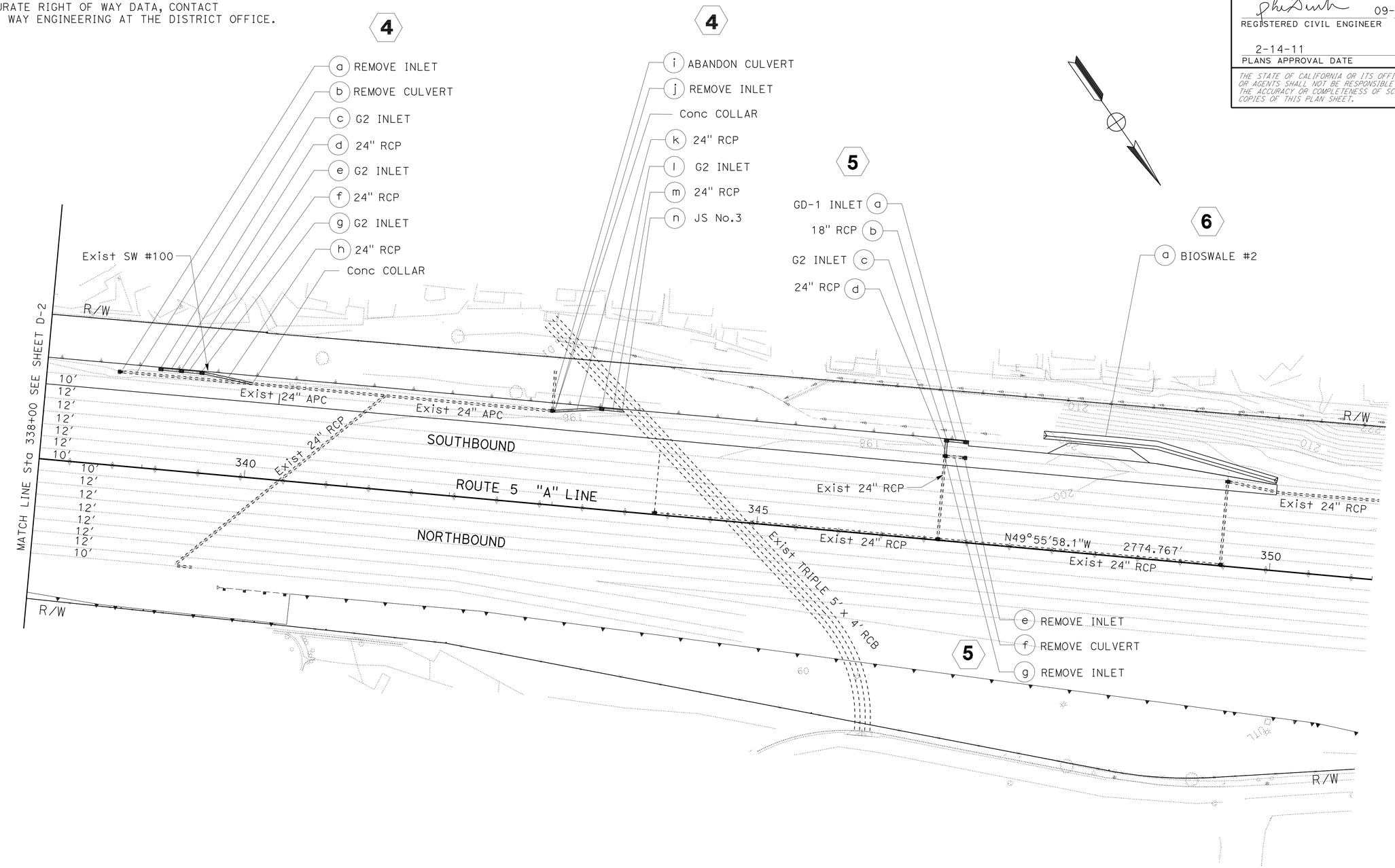

DRAINAGE PLAN

SCALE: 1" = 50'

D-3

THIS PLAN ACCURATE FOR DRAINAGE WORK ONLY

PHI DINH	04-13-10
REVISED BY	DATE REVISED
PHI DINH	PHUONG NGUYEN
CALCULATED-DESIGNED BY	CHECKED BY
FUNCTIONAL SUPERVISOR	ROGER KAO

STATE OF CALIFORNIA - DEPARTMENT OF TRANSPORTATION

Caltrans

HYDRAULICS

LAST REVISION 04-15-10 | DATE PLOTTED => 17-FEB-2011 TIME PLOTTED => 11:03

Dist	COUNTY	ROUTE	POST MILES TOTAL PROJECT	SHEET No.	TOTAL SHEETS
12	Ora	5	5.6/6.6	29	154

REGISTERED CIVIL ENGINEER 09-13-10 DATE

2-14-11
PLANS APPROVAL DATE

REGISTERED PROFESSIONAL ENGINEER PHI DINH No. C61179 Exp. 06/30/11 CIVIL STATE OF CALIFORNIA

THE STATE OF CALIFORNIA OR ITS OFFICERS OR AGENTS SHALL NOT BE RESPONSIBLE FOR THE ACCURACY OR COMPLETENESS OF SCANNED COPIES OF THIS PLAN SHEET.

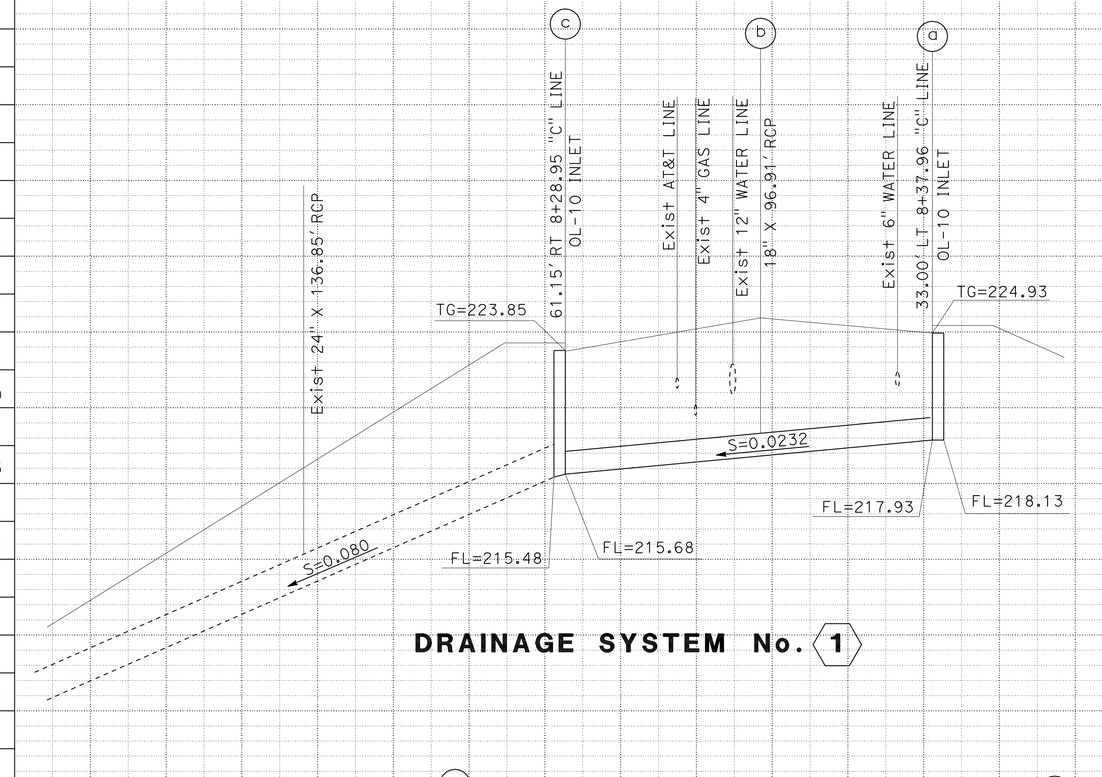

DRAINAGE SYSTEM No. 1

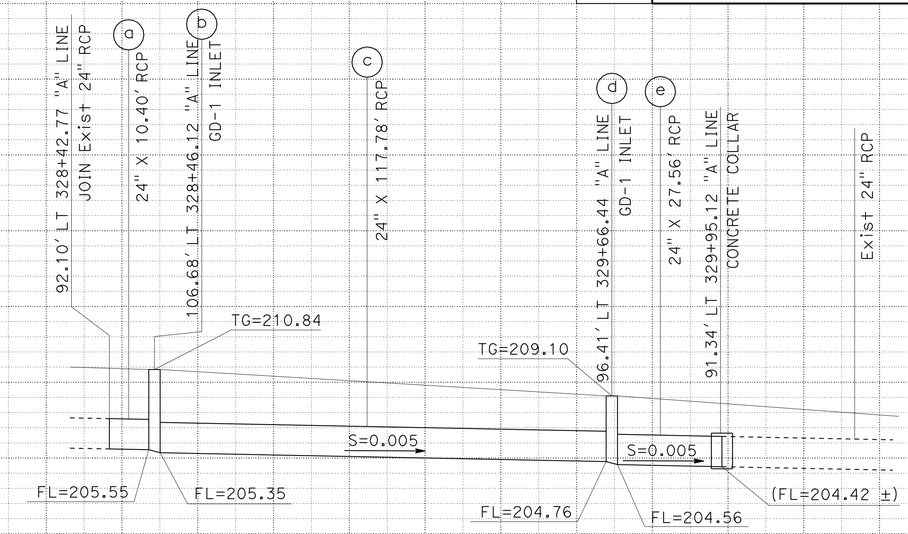

DRAINAGE SYSTEM No. 3

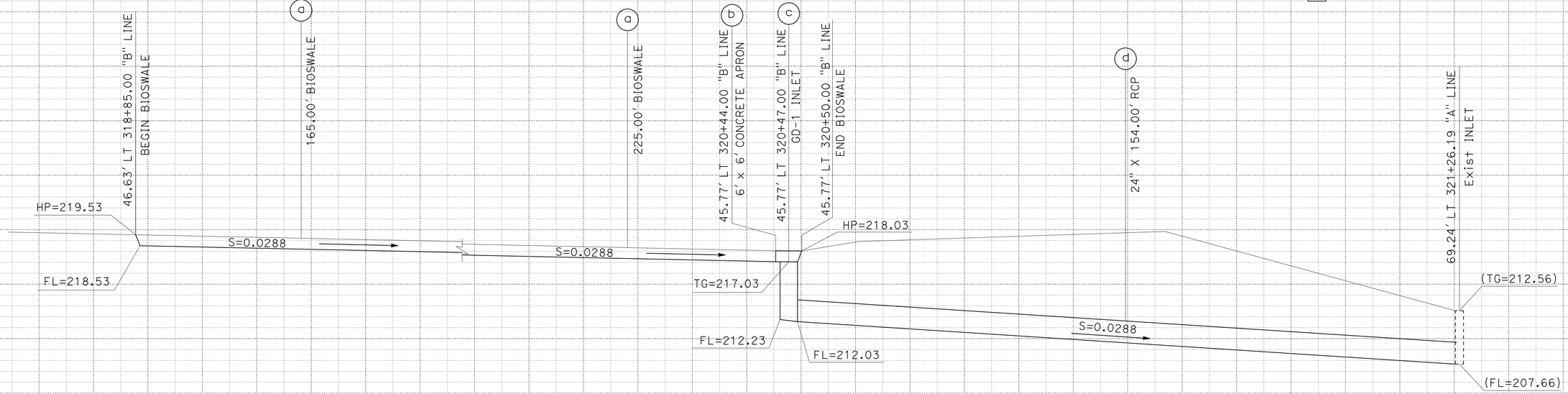

DRAINAGE SYSTEM No. 2

DRAINAGE PROFILES

SCALE: Horiz 1" = 20'
Vert 1" = 5'

DP-1

STATION		
CY	Exc	
	Emb	

TOTAL

STATE OF CALIFORNIA - DEPARTMENT OF TRANSPORTATION
Caltrans® HYDRAULICS

FUNCTIONAL SUPERVISOR: ROGER KAO

CALCULATED-DESIGNED BY: PHI DINH
CHECKED BY: PHUONG NGUYEN

REVISED BY: PHI DINH
DATE REVISED: 04-13-10

LAST REVISION 04-15-10 | DATE PLOTTED => 16-FEB-2011 | TIME PLOTTED => 16:05

Dist	COUNTY	ROUTE	POST MILES TOTAL PROJECT	SHEET No.	TOTAL SHEETS
12	Ora	5	5.6/6.6	30	154

REGISTERED CIVIL ENGINEER 09-13-10 DATE

2-14-11
PLANS APPROVAL DATE

REGISTERED PROFESSIONAL ENGINEER PHI DINH No. C61179 Exp. 06/30/11 CIVIL STATE OF CALIFORNIA

THE STATE OF CALIFORNIA OR ITS OFFICERS OR AGENTS SHALL NOT BE RESPONSIBLE FOR THE ACCURACY OR COMPLETENESS OF SCANNED COPIES OF THIS PLAN SHEET.

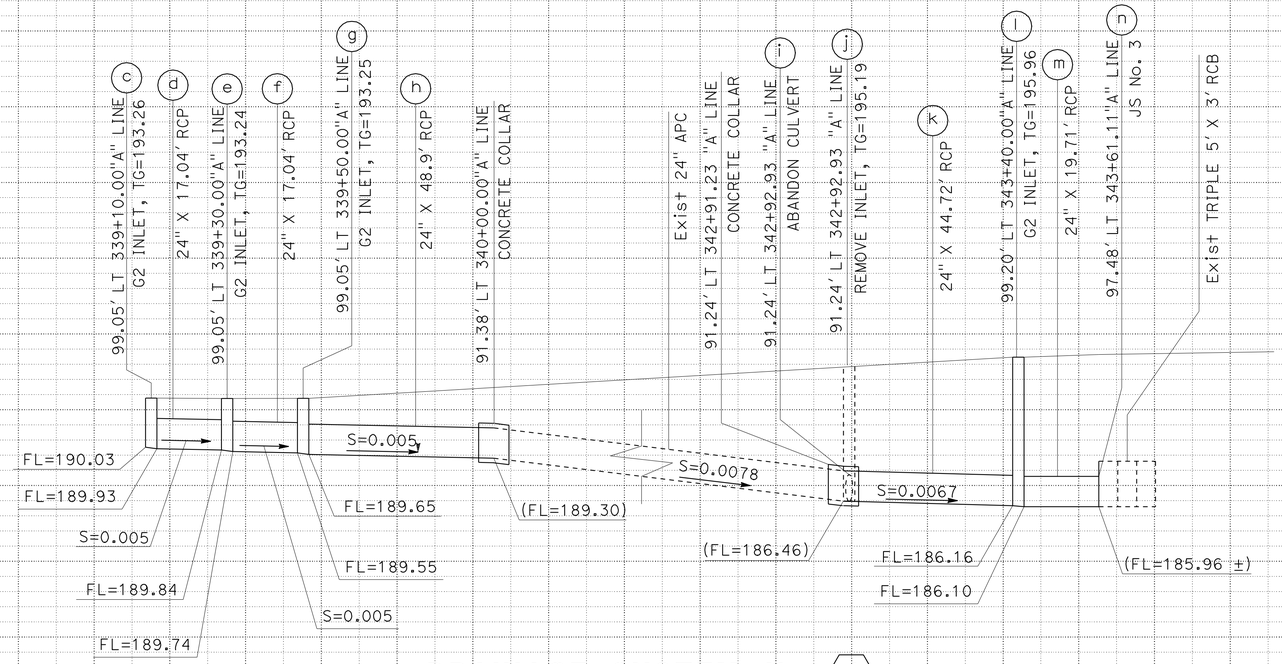

DRAINAGE SYSTEM No. 4

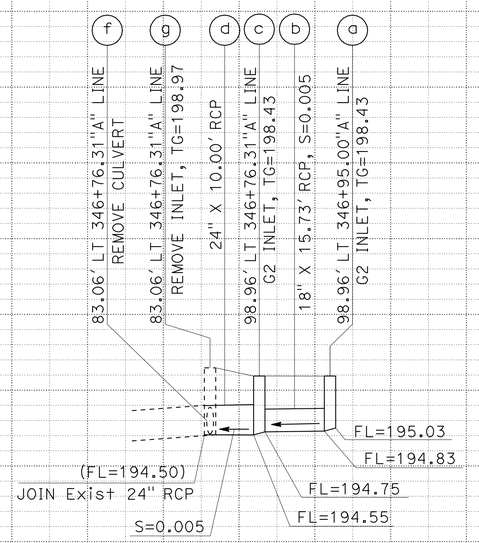

DRAINAGE SYSTEM No. 5

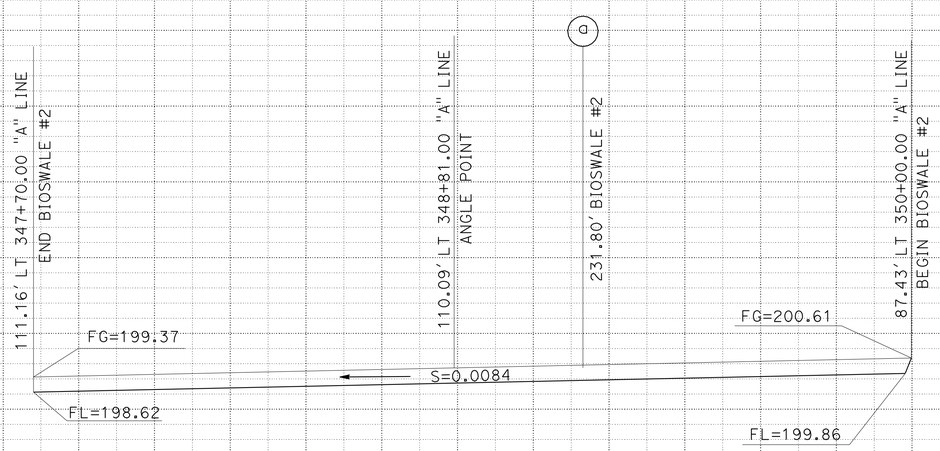

DRAINAGE SYSTEM No. 6

DRAINAGE PROFILES

SCALE: Horiz 1" = 20'
Vert 1" = 5'

DP-2

STATE OF CALIFORNIA - DEPARTMENT OF TRANSPORTATION
Caltrans
HYDRAULICS

FUNCTIONAL SUPERVISOR: ROGER KAO
CALCULATED-DESIGNED BY: PHI DINH
CHECKED BY: PHUONG NGUYEN
REVISED BY: PHI DINH
DATE REVISED: 04-13-10

STATION
CY Exc
Emb
TOTAL

LAST REVISION 04-15-10 | DATE PLOTTED => 16-FEB-2011 | TIME PLOTTED => 16:05

Dist	COUNTY	ROUTE	POST MILES TOTAL PROJECT	SHEET No.	TOTAL SHEETS
12	Ora	5	5.6/6.6	31	154

REGISTERED CIVIL ENGINEER 09-13-10 DATE

2-14-11
PLANS APPROVAL DATE

REGISTERED PROFESSIONAL ENGINEER PHI DINH No. C61179 Exp. 06/30/11 CIVIL STATE OF CALIFORNIA

THE STATE OF CALIFORNIA OR ITS OFFICERS OR AGENTS SHALL NOT BE RESPONSIBLE FOR THE ACCURACY OR COMPLETENESS OF SCANNED COPIES OF THIS PLAN SHEET.

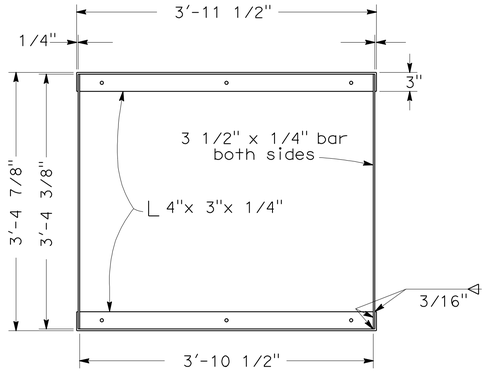

GRATE FRAME DETAIL

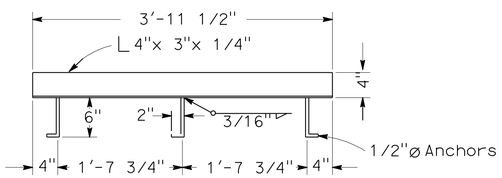

ANCHOR PLACEMENT DETAIL

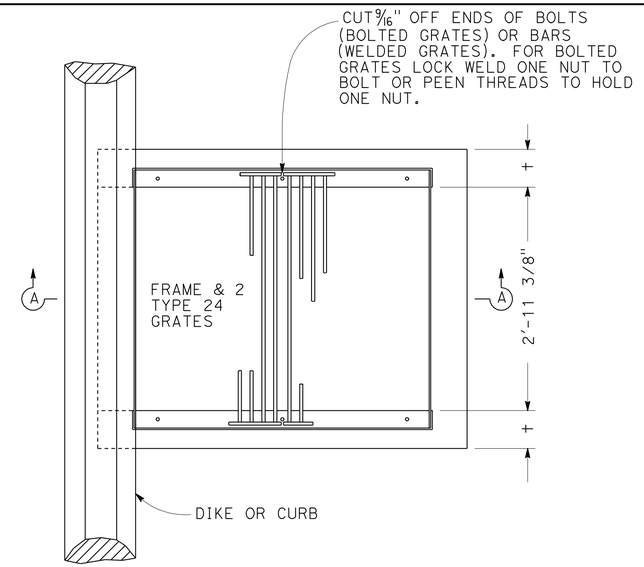

PLAN

FOR GRATE, FRAME AND ANCHOR PLACEMENT DETAILS SEE STANDARD PLANS RSP D77-A AND D77-B

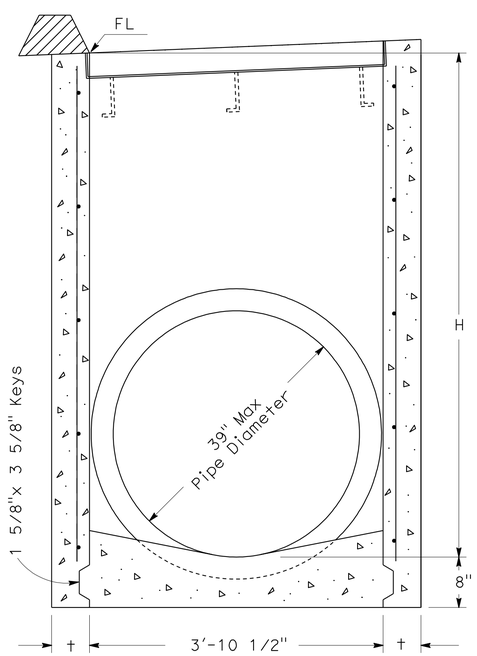

SECTION A-A

(FOR PIPE DIAMETERS 39" OR LESS)

GD-1 INLET

NOTES:

1. 'H' IS THE DIFFERENCE IN ELEVATION BETWEEN THE OUTLET PIPE FLOW LINE AND THE FLOW LINE OF THE GRATES.
2. STEPS - NONE REQUIRED WHEN 'H' IS 3'-6" OR LESS. INSTALL ONE STEP 16"± ABOVE FLOOR WHEN 'H' IS MORE THAN 3'-6" AND LESS THAN 5'-0". WHERE 'H' IS MORE THAN 5'-0" STEPS SHALL BE EVENLY SPACED @ 12"± INTERVALS FROM 16"± ABOVE FLOOR TO WITHIN 12"± OF THE TOP OF THE BOX. PLACE STEPS IN WALL WITHOUT PIPE OPENINGS. SEE STANDARD PLAN D74C FOR STEP DETAIL.
3. PIPE(S) CAN BE PLACED IN ANY WALL.
4. REINFORCING STEEL NOT REQUIRED IN WALLS WHEN H=6' OR LESS.
5. REINFORCING STEEL IN WALLS SHALL BE #4 BARS @ 18"± CENTERS PLACED 1½" CLEAR TO INSIDE OF BOX.

MISCELLANEOUS IRON & STEEL

INLET TYPE	GRATE TYPE	WEIGHT
GD-1	24 - 12	580
	24 - 10C	379
	24 - 10S	433
	24 - 12X	453
	24 - 13	351

H	+
8'-0" or less	6"
8'1" to 20'- 0"	8"

DRAINAGE DETAILS

NO SCALE

DD-1

STATE OF CALIFORNIA - DEPARTMENT OF TRANSPORTATION
Caltrans
HYDRAULICS

FUNCTIONAL SUPERVISOR: ROGER KAO
CALCULATED-DESIGNED BY: PHI DINH
CHECKED BY: PHUONG NGUYEN
REVISED BY: PHI DINH
DATE REVISED: 04-13-10

LAST REVISION 04-15-10
DATE PLOTTED => 16-FEB-2011
TIME PLOTTED => 16:05

Dist	COUNTY	ROUTE	POST MILES TOTAL PROJECT	SHEET No.	TOTAL SHEETS
12	Ora	5	5.6/6.6	32	154

REGISTERED CIVIL ENGINEER 09-13-10 DATE

2-14-11
PLANS APPROVAL DATE

REGISTERED PROFESSIONAL ENGINEER
PHI DINH
No. C61179
Exp. 06/30/11
CIVIL
STATE OF CALIFORNIA

THE STATE OF CALIFORNIA OR ITS OFFICERS OR AGENTS SHALL NOT BE RESPONSIBLE FOR THE ACCURACY OR COMPLETENESS OF SCANNED COPIES OF THIS PLAN SHEET.

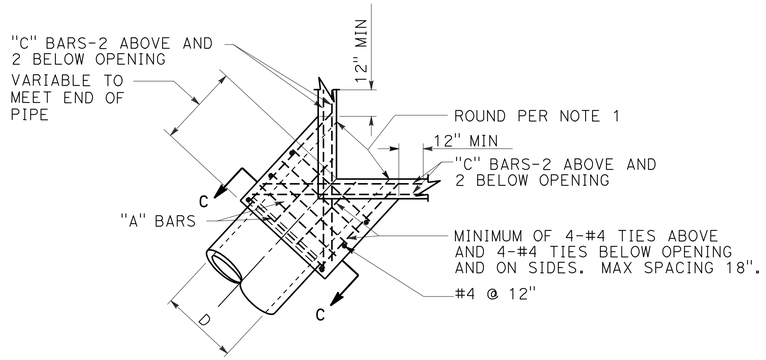

PLAN
CORNER CONNECTION

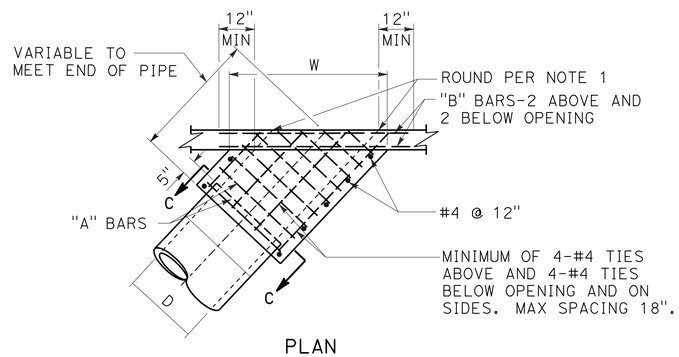

PLAN
SIDE CONNECTION

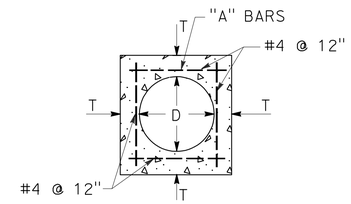

SECTION C-C

D	T	"A"	"B"-"C"
12"	4-½"	#4 @ 6"	#5
15"	4-½"		
18"	5"		
21"	5-½"		
24"	6"		
27"	6-½"		
30"	7"		
33"	7"		
36"	7-½"		
39"	**8"**		
42"	8"		
45"	8"	#5 @ 6"	#6
48"	8"		
51"	8"		
54"	8"		
57"	10"		
60"	10"		
63"	10"		
66"	11"		
69"	11"		
72"	11"		

NOTES:

1. ROUND EDGE OF OUTLET TO 3" RADIUS.
2. REINFORCEMENT SHALL BE 1½" CLEAR FROM THE FACE OF CONCRETE.
3. IN CONNECTING TO AN EXISTING STRUCTURE BREAK OUT PORTIONS OF THE EXISTING STRUCTURE SIX INCHES OUTSIDE ITS INTERSECTION WITH THE NEW CONNECTION. BEND ENDS OF #4 BARS OVER CONNECTION OPENING AS REQUIRED.

MONOLITHIC CONNECTION
FOR PIPES 12" TO 72" INCLUSIVE

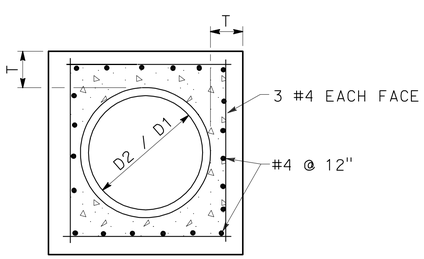

SECTION B-B

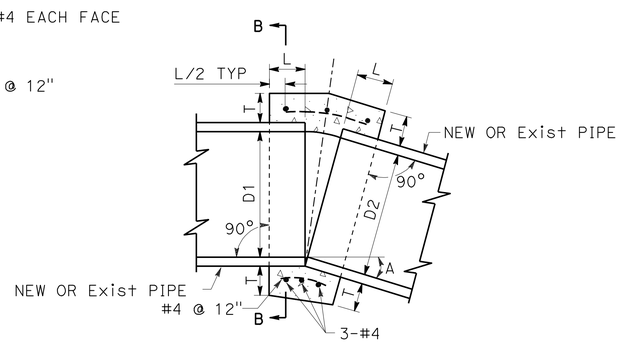

CONCRETE COLLAR

D	L	T
12"	1.0'	4"
18"	1.0'	5"
24"	1.0'	6"
36"	1.5'	8"
48"	1.5'	10"
54"	1.5'	10"
60"	1.75'	11"
66"	1.75'	11"
72"	2.0'	12"

NOTES:

1. WHERE PIPES OF DIFFERENT DIAMETERS ARE JOINED WITH A CONCRETE COLLAR, 'L' AND 'T' SHALL BE THOSE OF THE LARGER PIPE. D=D1 OR D2, WHICHEVER IS GREATER.
2. FOR PIPE SIZE NOT LISTED USE NEXT SIZE LARGER.
3. OMIT REINFORCING ON PIPES 24" AND LESS IN DIAMETER AND ON ALL PIPES WHERE ANGLE A IS LESS THAN 10°.
4. JOIN PIPES AT INVERTS.
5. REINFORCEMENT SHALL BE PLACED 1½" CLEAR FROM OUTSIDE DIAMETER OF PIPE.

DRAINAGE DETAILS

NO SCALE

DD-2

STATE OF CALIFORNIA - DEPARTMENT OF TRANSPORTATION
Caltrans
HYDRAULICS

REVISED BY	PHI DINH
DATE REVISED	04-13-10
CALCULATED-DESIGNED BY	PHI DINH
CHECKED BY	PHUONG NGUYEN
FUNCTIONAL SUPERVISOR	ROGER KAO

LAST REVISION 04-15-10
DATE PLOTTED => 16-FEB-2011
TIME PLOTTED => 16:05

Dist	COUNTY	ROUTE	POST MILES TOTAL PROJECT	SHEET No.	TOTAL SHEETS
12	Ora	5	5.6/6.6	33	154

REGISTERED CIVIL ENGINEER 09-13-10 DATE

2-14-11
PLANS APPROVAL DATE

REGISTERED PROFESSIONAL ENGINEER PHI DINH No. C61179 Exp. 06/30/11 CIVIL STATE OF CALIFORNIA

THE STATE OF CALIFORNIA OR ITS OFFICERS OR AGENTS SHALL NOT BE RESPONSIBLE FOR THE ACCURACY OR COMPLETENESS OF SCANNED COPIES OF THIS PLAN SHEET.

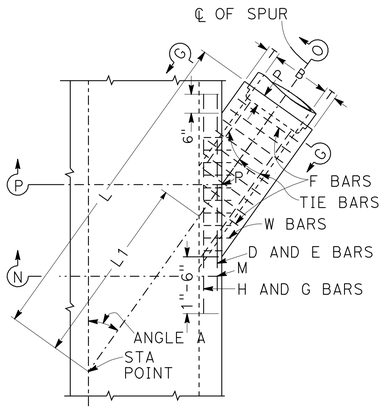

PLAN

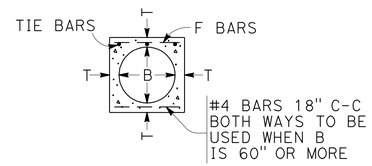

SECTION G-G

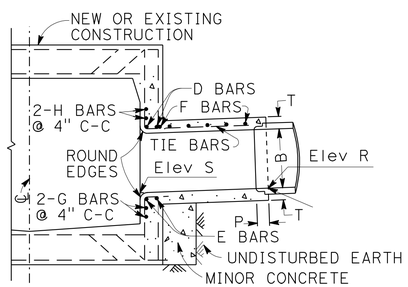

SECTION N-M-P'-O

PROJECTED ON P-P'-O

TABLE OF VALUES FOR T			
B	T	B	T
12"	4"	63"	10"
15"	4 1/4"	66"	10 1/4"
18"	4 1/2"	69"	10 3/4"
21"	5"	72"	11"
24"	5 1/4"	78"	11 3/4"
27"	5 1/2"	84"	12 1/2"
30"	6"	90"	13 1/4"
33"	6 1/4"	96"	14"
36"	6 1/2"	102"	15 1/2"
39"	7"	108"	16"
42"	7 1/2"	114"	16 1/2"
45"	7 3/4"	120"	17"
48"	8"	126"	17"
51"	8 1/2"	132"	17 1/2"
54"	9"	138"	17 1/2"
57"	9 1/4"	144"	18"
60"	9 1/2"		

NOTES:

1. VALUES FOR 'A', 'B', 'L', 'L1', 'Elev R' AND 'Elev S' ARE SHOWN ON DRAINAGE PLAN.
2. STATIONS SPECIFIED IN DRAINAGE PLAN APPLY AT INTERSECTION OF CENTERLINES OF MAIN LINE AND LATERAL.
3. EMBEDMENT 'P' SHALL BE 5" FOR PIPE DIAMETERS 12" TO 96" AND 8" FOR PIPE DIAMETERS 102" TO 144".
4. REINFORCING STEEL SHALL BE 1½" CLEAR FROM FACE OF CONCRETE UNLESS OTHERWISE SHOWN. W BARS ARE OF SIZE AND SPACING SPECIFIED FOR WALL STEEL ON DRAINAGE PLAN, AND SHALL BE CUT IN CENTER OF OPENING AND BENT INTO TOP AND BOTTOM OF JUNCTION STRUCTURE. OMIT H BARS WHEN SOFFIT OF SPUR IS 1' OR LESS BELOW SOFFIT OF MAIN LINE, AND OMIT G BARS WHEN INVERT OF SPUR IS 1' OR LESS ABOVE FLOOR OF MAIN LINE.
5. STEEL SCHEDULE:

Dia B	D,E,H,G Bars	F Bars
12" to 39"	#5	#4 @ 6" C-C
42" to 84"	#6	#5 @ 6" C-C
90" to 144"	#7	#6 @ 6" C-C
Tie bars - #3 @ 18" C-C		

6. JUNCTION STRUCTURE SHALL BE POURED MONOLITHIC WITH MAIN LINE STORM DRAIN OR MANHOLE.
7. FLOOR OF STRUCTURE SHALL BE STEEL-TROWELED.

JUNCTION STRUCTURE No. 3 (JS No. 3)

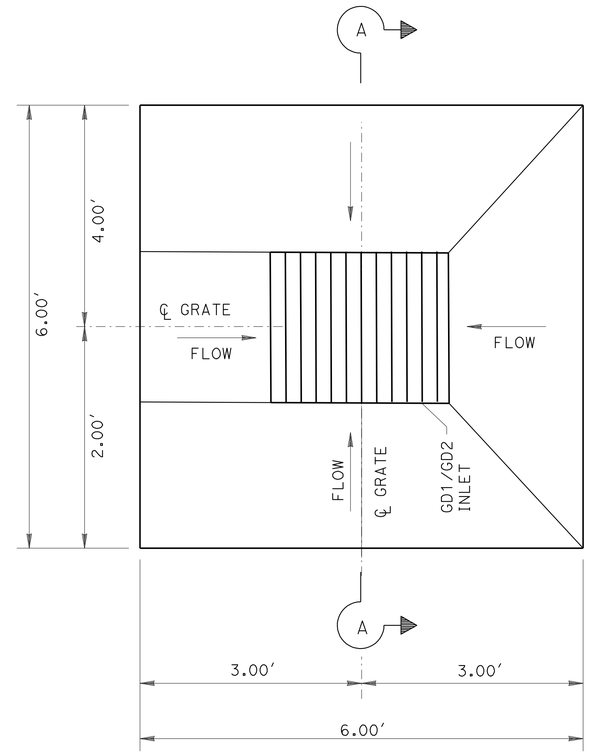

PLAN

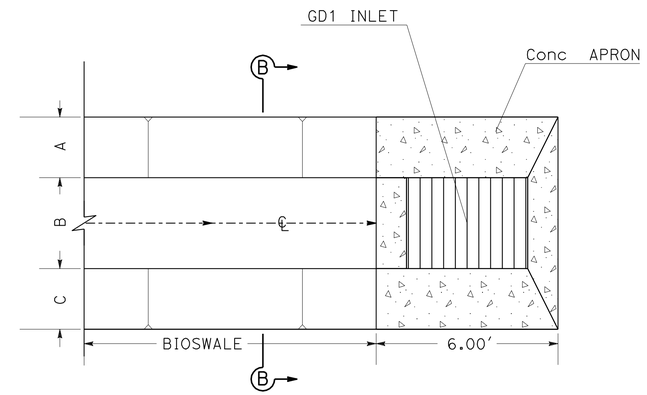

PLAN

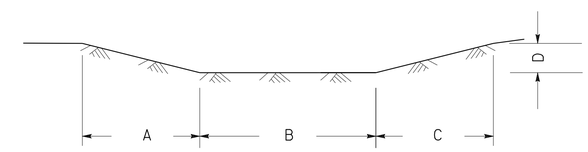

SECTION B-B

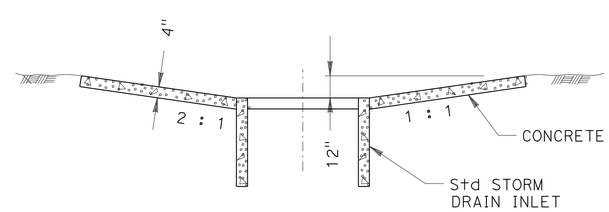

SECTION A-A

CONCRETE APRON

	A	B	C	D
BIOSWALE #1	2'	3'	1'	12"
BIOSWALE #2	3'	0'	3' Min	9"

BIOSWALE

DRAINAGE DETAILS

NO SCALE

DD-3

PHI DINH	04-13-10
REVISED BY	DATE REVISED
PHI DINH	PHUONG NGUYEN
CALCULATED-DESIGNED BY	CHECKED BY
FUNCTIONAL SUPERVISOR	ROGER KAO

STATE OF CALIFORNIA - DEPARTMENT OF TRANSPORTATION
Caltrans
HYDRAULICS

LAST REVISION 04-15-10 | DATE PLOTTED => 17-FEB-2011 TIME PLOTTED => 07:57

Dist	COUNTY	ROUTE	POST MILES TOTAL PROJECT	SHEET No.	TOTAL SHEETS
12	Ora	5	5.6/6.6	34	154

REGISTERED CIVIL ENGINEER 09-13-10 DATE

2-14-11
PLANS APPROVAL DATE

REGISTERED PROFESSIONAL ENGINEER PHI DINH No. C61179 Exp. 06/30/11 CIVIL STATE OF CALIFORNIA

THE STATE OF CALIFORNIA OR ITS OFFICERS OR AGENTS SHALL NOT BE RESPONSIBLE FOR THE ACCURACY OR COMPLETENESS OF SCANNED COPIES OF THIS PLAN SHEET.

NOTE: 1. (N) NOT A SEPARATE PAY ITEM, FOR INFORMATION ONLY.

ABBREVIATIONS: S = STANDARD JOINT TYPE

⬡ DRAINAGE SYSTEM No.	○ DRAINAGE UNIT	MINOR CONCRETE (MINOR STRUCTURE)	MISCELLANEOUS IRON AND STEEL	FRAME & GRATE (24-12) (N)	18" RCP	24" RCP	PIPE JOINT CLASSIFICATION	REMOVE INLET	REMOVE CULVERT	ABANDON CULVERT	SAND BACKFILL	DITCH EXCAVATION	"H" OR "V"	MAXIMUM COVER	DESCRIPTION	STATION	DRAINAGE PLAN SHEET No.	⬡ DRAINAGE SYSTEM No.	○ DRAINAGE UNIT
		CY	LB	EA	LF	LF		EA	LF	LF	CY	CY	FT	FT					
1	a	3.50											7.00		OL-10 INLET	33.00′ L+ 8+37.96 "C" LINE	D-1	1	a
	b				96.91		S							5.00	18" RCP	BET 33.00′ L+ 8+37.96 & 61.15′ R+ 6+28.95 "C" LINE			b
	c	6.85											8.37		OL-10 INLET	61.15′ R+ 8+28.95 "C" LINE			c
	d							1					5.25		REMOVE INLET	30.01′ L+ 8+05.14 "C" LINE			d
	e									29.90	2.61				ABANDON CULVERT	BET 37.59′ R+ 8+10.55 & 30.01′ L+ 8+05.14 "C" LINE			e
	f							1					4.00		REMOVE INLET	37.59′ R+ 8+10.55 "C" LINE			f
	g									66.84	7.77				ABANDON CULVERT	BET 61.15′ R+ 8+28.95′ & 37.59′ R+ 8+10.55 "C" LINE			g
2	a											27.5			BIOSWALE #1	BET 43.62′ L+ 318+85.00 & 42.30′ L+ 320+50.00 "B" LINE	D-1	2	a
	b	0.44													CONCRETE APRON	42.30′ L+ 320+47.00 "B" LINE			b
	c	2.31	580	2									5.00		GD-1 INLET	42.30′ L+ 320+44.00 "B" LINE			c
	d					154.00	S							8.50	24" RCP	BET 42.30′ L+ 320+50.00 "B" LINE & 69.24′ L+ 321+26.19 "A" LINE			d
3	a					10.40	S							3.50	24" RCP	BET 92.10′ L+ 328+42.77 & 106.68′ L+ 328+46.12 "A" LINE	D-2	3	a
	b	2.49	580	2									5.49		GD-1 INLET	106.68′ L+ 328+46.12 "A" LINE			b
	c					117.78	S							3.50	24" RCP	BET 106.68′ L+ 328+46.12 & 96.41′ L+ 329+66.44 "A" LINE			c
	d	2.15	580	2									4.54		GD-1 INLET	96.41′ L+ 329+66.44 "A" LINE			d
	e					27.56	S							2.60	24" RCP	BET 96.41′ L+ 329+66.44 & 91.34′ L+ 329+95.12 "A" LINE			e
	f								26.33					6.00	REMOVE CULVERT	BET 91.34′ L+ 329+95.12 & 88.86′ L+ 329+66.44 "A" LINE			f
	g							1					5.00		REMOVE INLET	88.86′ L+ 329+66.44 "A" LINE			g
	h								121.00					6.00	REMOVE CULVERT	BET 88.86′ L+ 329+66.44 & 94.09 L+ 328+42.77 "A" LINE			h
	i							1					5.00		REMOVE INLET	94.09′ L+ 328+42.77 "A" LINE			i
4	a							1					3.28		REMOVE INLET	91.30′ L+ 338+71.13 "A" LINE	D-3	4	a
	b								127.62					6.00	REMOVE CULVERT	BET 91.30′ L+ 338+71.13 & 91.38′ L+ 340+00.00 "A" LINE			b
	c	1.38	326	1									3.33		G2 INLET	99.05′ L+ 339+10.00 "A" LINE			c
	d					17.04	S							1.40	24" RCP	BET 99.05′ L+ 339+10.00 & 99.05′ L+ 339+30.00 "A" LINE			d
	e	1.42	326	1									3.50		G2 INLET	99.05′ L+ 339+30.00 "A" LINE			e
	f					17.04	S							1.50	24" RCP	BET 99.05′ L+ 339+30.00 & 99.05′ L+ 339+50.00 "A" LINE			f
	g	1.47	326	1									3.70		G2 INLET	99.05′ L+ 339+50.00 "A" LINE			g
	h					48.90	S							2.70	24" RCP	BET 99.05′ L+ 339+50.00 & 91.38′ L+ 340+00.00 "A" LINE			h
	i									40.00	4.65				ABANDON CULVERT	BET 131.24′ L+ 342+92.93 & 91.24′ L+ 342+92.93 "A" LINE			i
	j							1					8.73		REMOVE INLET	91.24′ L+ 342+92.93 "A" LINE			j
	k					44.72	S							7.80	24" RCP	BET 91.24′ L+ 342+91.23 & 99.20′ L+ 343+40.00 "A" LINE			k
	l	4.16	326	1									3.70		G2 INLET	99.20′ L+ 343+40.00 "A" LINE			l
	m					19.71	S							10.00	24" RCP	BET 99.20′ L+ 343+40.00 & 97.48′ L+ 343+61.11 "A" LINE			m
	n	1.00													JUNCTION STRUCTURE No. 3	97.48′ L+ 343+61.11 "A" LINE			n
5	a	1.45	326	1									3.60		G2 INLET	98.96′ L+ 346+95.00 "A" LINE	D-3	5	a
	b				15.73		S							1.80	18" RCP	BET 98.96′ L+ 346+95.00 & 98.96′ L+ 346+76.31 "A" LINE			b
	c	1.51	326	1									3.88		G2 INLET	98.96′ L+ 346+76.31 "A" LINE			c
	d					10.00	S							2.50	24" RCP	BET 98.96′ L+ 346+76.31 & 83.06′ L+ 346+76.31 "A" LINE			d
	e							1					4.20		REMOVE INLET	83.06′ L+ 346+95.37 "A" LINE			e
	f								16.10					5.00	REMOVE CULVERT	BET 83.06′ L+ 346+95.37 & 83.06′ L+ 346+76.31 "A" LINE			f
	g							1					4.40		REMOVE INLET	83.06′ L+ 346+76.31 "A" LINE			g
6	a											19.3			BIOSWALE #2	BET 87.43′ L+ 350+00.00 & 111.16′ L+ 347+70.00 "A" LINE	D-3	6	a
TOTAL		30.14	3696	12	112.64	467.15		8	291.05	136.74	15.03	46.8							

DRAINAGE QUANTITIES
DQ-1

STATE OF CALIFORNIA - DEPARTMENT OF TRANSPORTATION
Caltrans
HYDRAULICS

FUNCTIONAL SUPERVISOR: ROGER KAO
CALCULATED-DESIGNED BY: PHI DINH
CHECKED BY: PHUONG NGUYEN
REVISED BY: PHI DINH
DATE REVISED: 04-13-10

LAST REVISION 04-15-10 | DATE PLOTTED => 17-FEB-2011 | TIME PLOTTED => 07:58

Dist	COUNTY	ROUTE	POST MILES TOTAL PROJECT	SHEET No.	TOTAL SHEETS
12	Ora	5	5.6/6.6	35	154

REGISTERED CIVIL ENGINEER 09-13-10 DATE

2-14-11
PLANS APPROVAL DATE

REGISTERED PROFESSIONAL ENGINEER CHRISTOPHER H. LE No. C 55788 Exp. 12-31-10 CIVIL STATE OF CALIFORNIA

THE STATE OF CALIFORNIA OR ITS OFFICERS OR AGENTS SHALL NOT BE RESPONSIBLE FOR THE ACCURACY OR COMPLETENESS OF SCANNED COPIES OF THIS PLAN SHEET.

NOTES:

1. LOCATION OF UTILITY FACILITIES SHOWN WERE OBTAIN FROM OWNERS RECORDS AND/OR FROM STATE RECORDS OR SURVEYS.
2. LOCATIONS OF UTILITY FACILITIES SHOWN ON THESE PLANS ARE APPROXIMATE AND SHALL BE VERIFIED BY THE CONTRACTOR PRIOR TO CONSTRUCTION.
3. FOR ACCURATE RIGHT OF WAY AND ACCESS DATA, CONTACT RIGHT OF WAY ENGINEERING AT THE DISTRICT OFFICE.
4. ALL ELEVATIONS SHOWN REFER TO THE TOP OF PIPE ELEVATION.
5. REFER TO SIGNAL AND LIGHTING PLANS FOR STREET LIGHTS.

LEGEND:

XX POTHOLE NUMBER

POTHOLE LOCATION

TO / FROM RELOCATE EXIST FACILITIES

ABBREVIATIONS

AT&T	AMERICAN TELEGRAPH AND TELEPHONE COMPANY
SDG&E	SAN DIEGO GAS AND ELECTRIC COMPANY
SCG	SOUTHERN CALIFORNIA GAS COMPANY
SCWD	SOUTH COAST WATER DISTRICT
JRWSS	JOIN REGIONAL WATER SUPPLY SYSTEM
CAB	CABINET

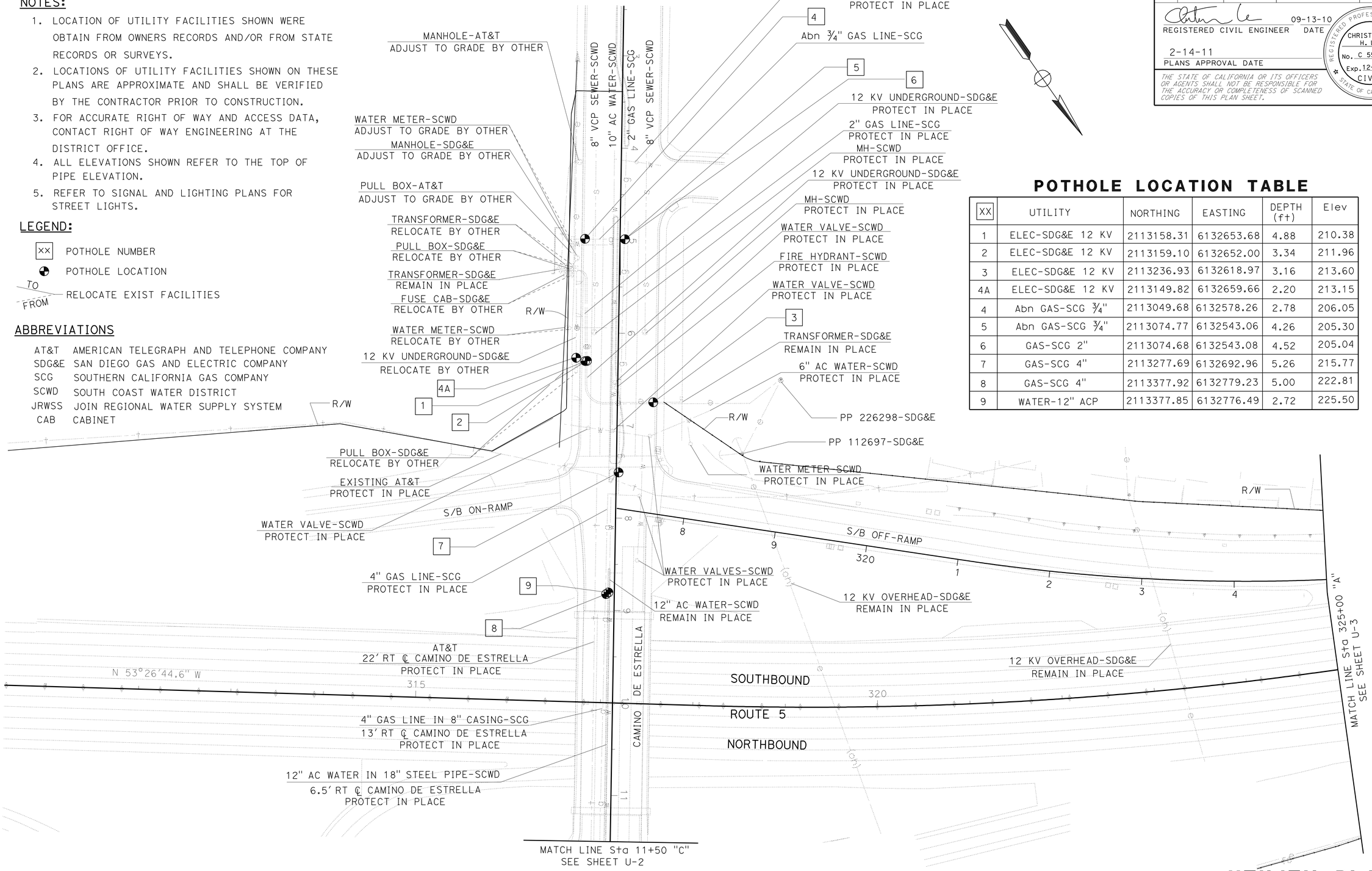

POTHOLE LOCATION TABLE

XX	UTILITY	NORTHING	EASTING	DEPTH (ft)	Elev
1	ELEC-SDG&E 12 KV	2113158.31	6132653.68	4.88	210.38
2	ELEC-SDG&E 12 KV	2113159.10	6132652.00	3.34	211.96
3	ELEC-SDG&E 12 KV	2113236.93	6132618.97	3.16	213.60
4A	ELEC-SDG&E 12 KV	2113149.82	6132659.66	2.20	213.15
4	Abn GAS-SCG ¾"	2113049.68	6132578.26	2.78	206.05
5	Abn GAS-SCG ¾"	2113074.77	6132543.06	4.26	205.30
6	GAS-SCG 2"	2113074.68	6132543.08	4.52	205.04
7	GAS-SCG 4"	2113277.69	6132692.96	5.26	215.77
8	GAS-SCG 4"	2113377.92	6132779.23	5.00	222.81
9	WATER-12" ACP	2113377.85	6132776.49	2.72	225.50

UTILITY PLAN

SCALE: 1" = 50'

U-1

THIS PLAN ACCURATE FOR UTILITY INFORMATION ONLY

REVISED BY	DATE REVISED
M. PHAM	7/12/10

CALCULATED-DESIGNED BY: MINH PHAM
CHECKED BY: CHRISTOPHER LE
FUNCTIONAL SUPERVISOR: CHRISTOPHER LE

STATE OF CALIFORNIA - DEPARTMENT OF TRANSPORTATION
Caltrans
DESIGN

LAST REVISION 07-12-10 | DATE PLOTTED => 17-FEB-2011 | TIME PLOTTED => 07:58

Dist	COUNTY	ROUTE	POST MILES TOTAL PROJECT	SHEET No.	TOTAL SHEETS
12	Ora	5	5.6/6.6	36	154

REGISTERED CIVIL ENGINEER 09-13-10 DATE

2-14-11
PLANS APPROVAL DATE

REGISTERED PROFESSIONAL ENGINEER CHRISTOPHER H. LE No. C 55788 Exp. 12-31-10 CIVIL STATE OF CALIFORNIA

THE STATE OF CALIFORNIA OR ITS OFFICERS OR AGENTS SHALL NOT BE RESPONSIBLE FOR THE ACCURACY OR COMPLETENESS OF SCANNED COPIES OF THIS PLAN SHEET.

NOTE:

FOR ACCURATE RIGHT OF WAY AND ACCESS DATA,
CONTACT RIGHT OF WAY ENGINEERING AT THE DISTRICT OFFICE.

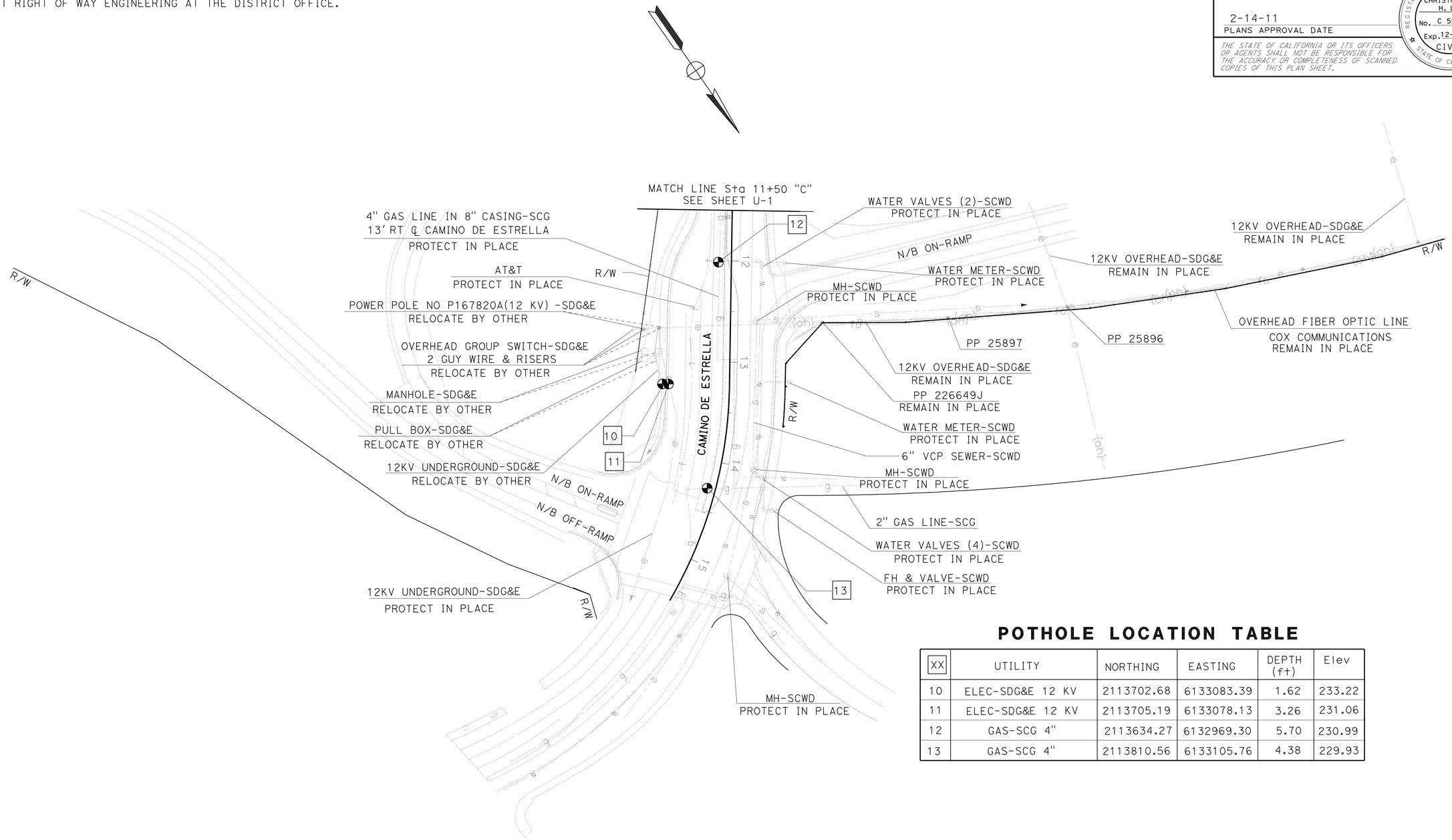

POTHOLE LOCATION TABLE

XX	UTILITY	NORTHING	EASTING	DEPTH (ft)	Elev
10	ELEC-SDG&E 12 KV	2113702.68	6133083.39	1.62	233.22
11	ELEC-SDG&E 12 KV	2113705.19	6133078.13	3.26	231.06
12	GAS-SCG 4"	2113634.27	6132969.30	5.70	230.99
13	GAS-SCG 4"	2113810.56	6133105.76	4.38	229.93

UTILITY PLAN

SCALE: 1" = 50'

THIS PLAN ACCURATE FOR UTILITY INFORMATION ONLY

U-2

STATE OF CALIFORNIA - DEPARTMENT OF TRANSPORTATION
Caltrans
DESIGN

FUNCTIONAL SUPERVISOR: CHRISTOPHER LE
CALCULATED-DESIGNED BY: MINH PHAM
CHECKED BY: CHRISTOPHER LE
REVISED BY: M. PHAM
DATE REVISED: 7/12/10

LAST REVISION 07-12-10 | DATE PLOTTED => 17-FEB-2011 | TIME PLOTTED => 07:58

Dist	COUNTY	ROUTE	POST MILES TOTAL PROJECT	SHEET No.	TOTAL SHEETS
12	Ora	5	5.6/6.6	37	154

REGISTERED CIVIL ENGINEER 09-13-10 DATE

2-14-11
PLANS APPROVAL DATE

REGISTERED PROFESSIONAL ENGINEER
CHRISTOPHER H. LE
No. C 55788
Exp.12-31-10
CIVIL
STATE OF CALIFORNIA

THE STATE OF CALIFORNIA OR ITS OFFICERS OR AGENTS SHALL NOT BE RESPONSIBLE FOR THE ACCURACY OR COMPLETENESS OF SCANNED COPIES OF THIS PLAN SHEET.

NOTE:

FOR ACCURATE RIGHT OF WAY AND ACCESS DATA,
CONTACT RIGHT OF WAY ENGINEERING AT THE DISTRICT OFFICE.

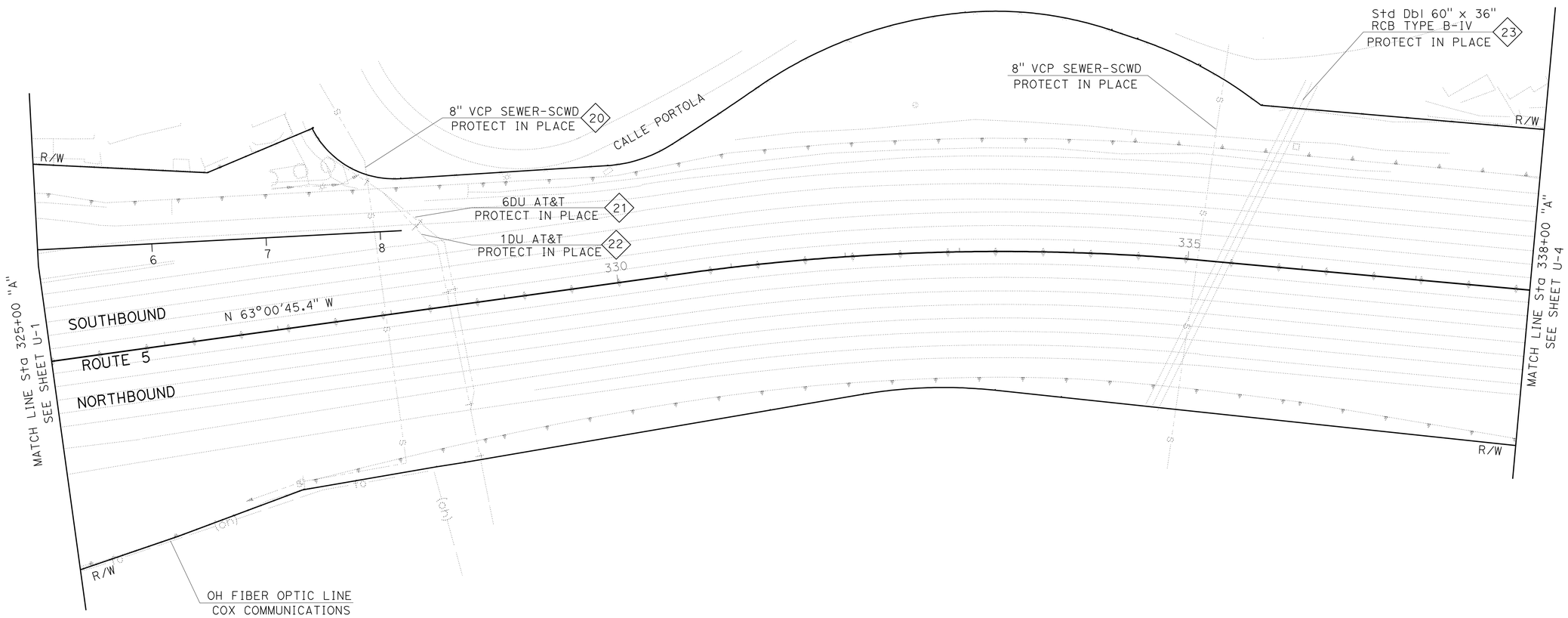

UTILITY PLAN

SCALE: 1" = 50'

U-3

THIS PLAN ACCURATE FOR UTILITY INFORMATION ONLY

M. PHAM	7/12/10	REVISED BY	DATE REVISED
MINH PHAM	CHRISTOPHER LE	CALCULATED-DESIGNED BY	CHECKED BY
FUNCTIONAL SUPERVISOR	CHRISTOPHER LE		

STATE OF CALIFORNIA - DEPARTMENT OF TRANSPORTATION
Caltrans
DESIGN

LAST REVISION 07-12-10 | DATE PLOTTED => 17-FEB-2011 | TIME PLOTTED => 07:58

Dist	COUNTY	ROUTE	POST MILES TOTAL PROJECT	SHEET No.	TOTAL SHEETS
12	Ora	5	5.6/6.6	38	154

REGISTERED CIVIL ENGINEER 09-13-10 DATE

2-14-11
PLANS APPROVAL DATE

REGISTERED PROFESSIONAL ENGINEER
CHRISTOPHER H. LE
No. C 55788
Exp. 12-31-10
CIVIL
STATE OF CALIFORNIA

THE STATE OF CALIFORNIA OR ITS OFFICERS OR AGENTS SHALL NOT BE RESPONSIBLE FOR THE ACCURACY OR COMPLETENESS OF SCANNED COPIES OF THIS PLAN SHEET.

NOTE:

FOR ACCURATE RIGHT OF WAY AND ACCESS DATA,
CONTACT RIGHT OF WAY ENGINEERING AT THE DISTRICT OFFICE.

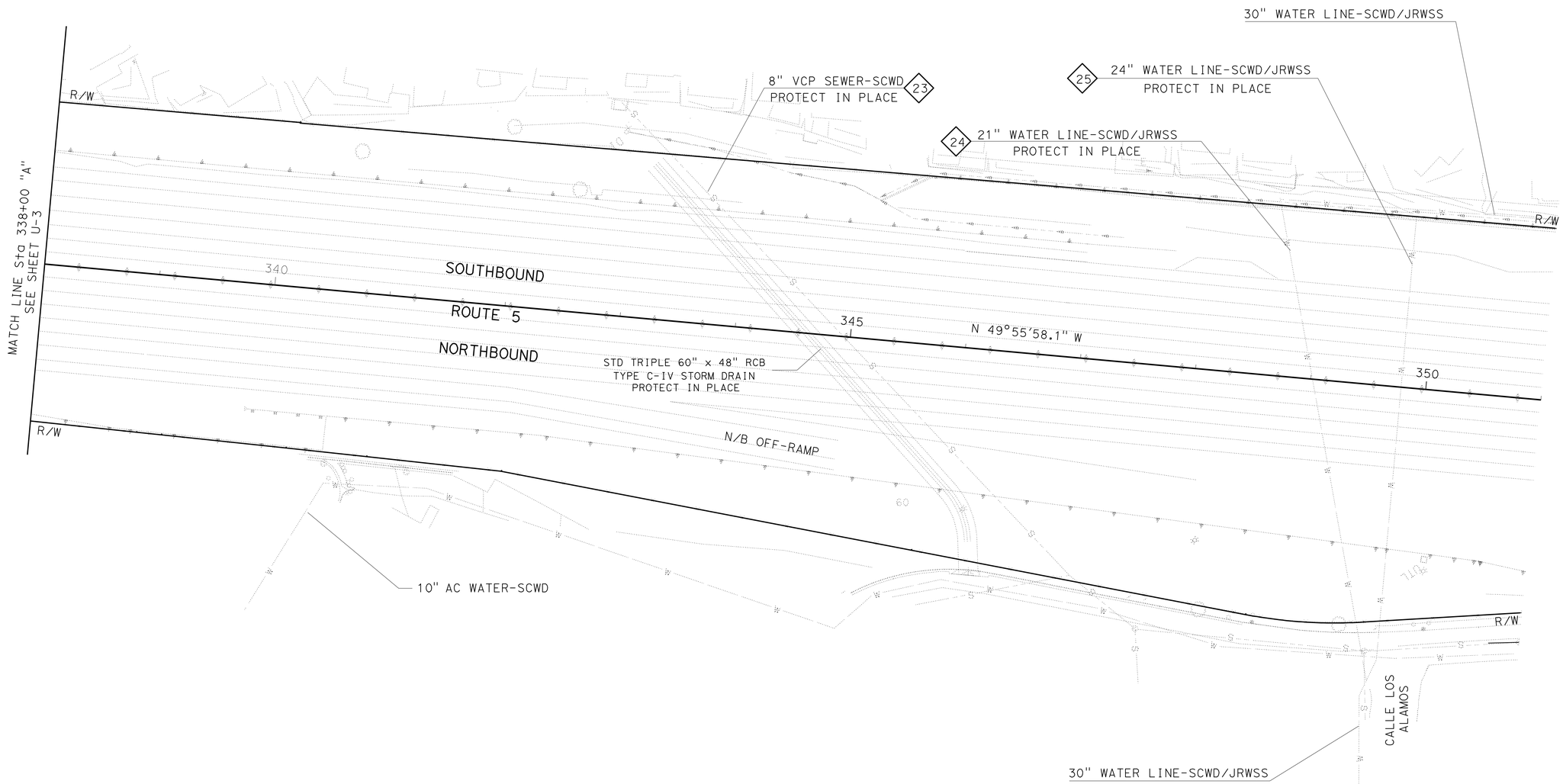

UTILITY PLAN

SCALE: 1" = 50'

U-4

THIS PLAN ACCURATE FOR UTILITY INFORMATION ONLY

CALCULATED-DESIGNED BY	MINH PHAM
CHECKED BY	CHRISTOPHER LE
REVISED BY	M. PHAM
DATE REVISED	7/12/10
FUNCTIONAL SUPERVISOR	CHRISTOPHER LE

STATE OF CALIFORNIA - DEPARTMENT OF TRANSPORTATION
Caltrans
DESIGN

LAST REVISION 07-12-10
DATE PLOTTED => 17-FEB-2011
TIME PLOTTED => 07:58

Dist	COUNTY	LOCATION CODE	POST MILES TOTAL PROJECT	SHEET No.	TOTAL SHEETS
12	Ora	5	5.6/6.6	39	154

REGISTERED CIVIL ENGINEER 09-13-10 DATE

2-14-11
PLANS APPROVAL DATE

REGISTERED PROFESSIONAL ENGINEER
JOSEPH LEE
No. C59058
Exp. 6/30/11
CIVIL
STATE OF CALIFORNIA

THE STATE OF CALIFORNIA OR ITS OFFICERS OR AGENTS SHALL NOT BE RESPONSIBLE FOR THE ACCURACY OR COMPLETENESS OF SCANNED COPIES OF THIS PLAN SHEET.

NOTE: LOCATION OF CONSTRUCTION AREA SIGNS ARE APPROXIMATE, EXACT SIGN LOCATIONS TO BE DETERMINED BY THE ENGINEER.

LEGEND:

CONSTRUCTION AREA SIGN - 1 POST

CONSTRUCTION AREA SIGN - 2 POST

CONSTRUCTION AREA SIGNS (STATIONARY MOUNTED)

TYPE	CODE	SIGN MESSAGE	PANEL SIZE	No. OF POST AND SIZE	No. OF SIGNS	REMARKS
A	W20-1	ROAD WORK AHEAD	72" x 72"	2-4" x 4"	1	
B	G20-2	END ROAD WORK	60" x 24"	1-4" x 6"	1	
C	W20-1	ROAD WORK AHEAD	48" x 48"	1-4" x 6"	4	
D	G20-2	END ROAD WORK	48" x 18"	1-4" x 4"	3	
E	SP-1	CONSTRUCTION PROJECT FUNDING IDENTIFICATION SIGN	90" x 60"	2-4" x 4"	1	TYPE 1 (RSP T7)

* FOR ADDITIONAL QUANTITIES OF CONSTRUCTION AREA SIGNS, SEE SHEET TH-2.

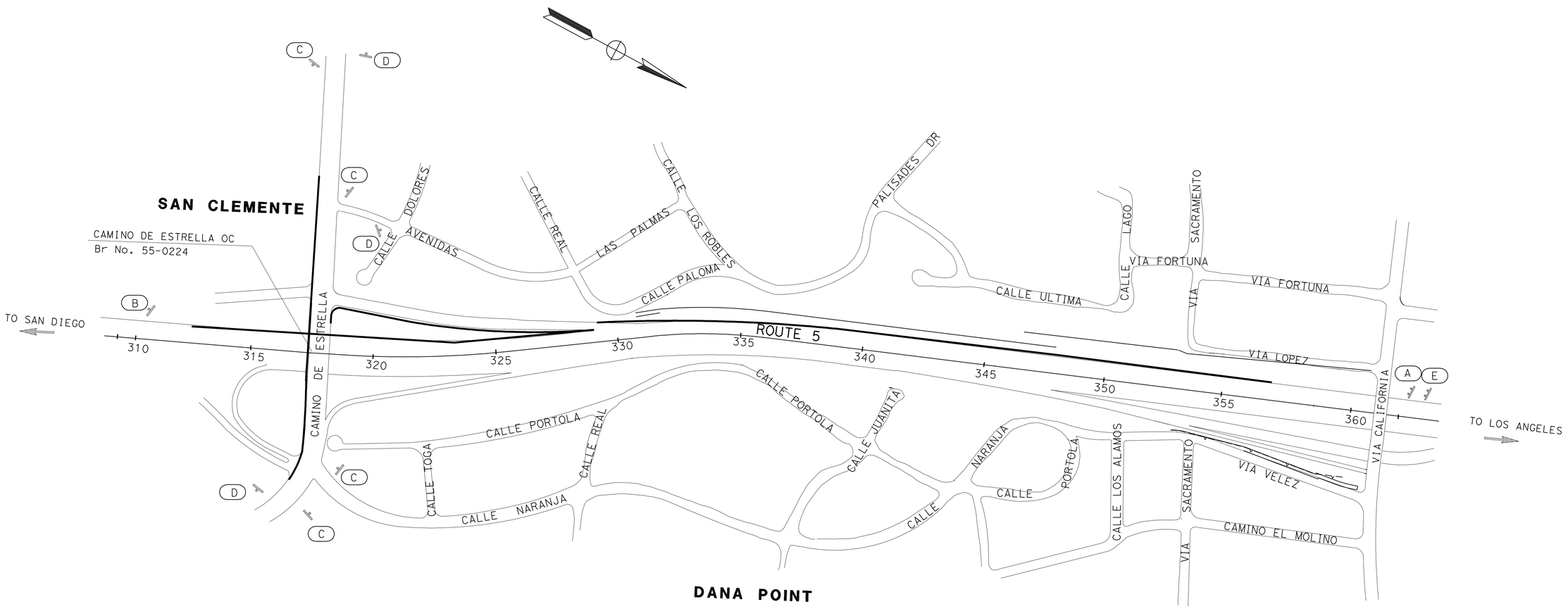

CONSTRUCTION AREA SIGNS

NO SCALE

THIS PLAN ACCURATE FOR CONSTRUCTION AREA SIGNS WORK ONLY

CS-1

REVISED BY	DATE REVISED
	03-18-10

CALCULATED-DESIGNED BY: JOSEPH LEE
CHECKED BY:

FUNCTIONAL SUPERVISOR: MILI LIM STAMATION

STATE OF CALIFORNIA - DEPARTMENT OF TRANSPORTATION
Caltrans
DESIGN

LAST REVISION 07-12-10 | DATE PLOTTED => 17-FEB-2011 | TIME PLOTTED => 07:58

Dist	COUNTY	LOCATION CODE	POST MILES TOTAL PROJECT	SHEET No.	TOTAL SHEETS
12	Ora	5	5.6/6.6	40	154

REGISTERED CIVIL ENGINEER DATE 09-13-10

2-14-11
PLANS APPROVAL DATE

REGISTERED PROFESSIONAL ENGINEER
JOSEPH LEE
No. C59058
Exp. 6/30/11
CIVIL
STATE OF CALIFORNIA

THE STATE OF CALIFORNIA OR ITS OFFICERS OR AGENTS SHALL NOT BE RESPONSIBLE FOR THE ACCURACY OR COMPLETENESS OF SCANNED COPIES OF THIS PLAN SHEET.

NOTES:

1. REMOVE CONFLICTING STRIPES AND SIGNS.
2. FOR ACCURATE RIGHT OF WAY DATA, CONTACT RIGHT OF WAY ENGINEERING AT THE DISTRICT OFFICE.

LEGEND:

- CONSTRUCTION AREA
- Temp RAILING (TYPE K) WITH TEMPORARY TRAFFIC SCREEN
- Temp CRASH CUSHION
- CHANNELIZER (SURFACE MOUNTED)
- ## PAVEMENT DELINEATION DETAIL
- DIRECTION OF TRAVEL
- Temp RAILING (TYPE K) WITH TRAFFIC SCREEN

DETAIL 13 MOD

(FOR STAGE CONSTRUCTION ONLY)

SECTION A-A

NO SCALE

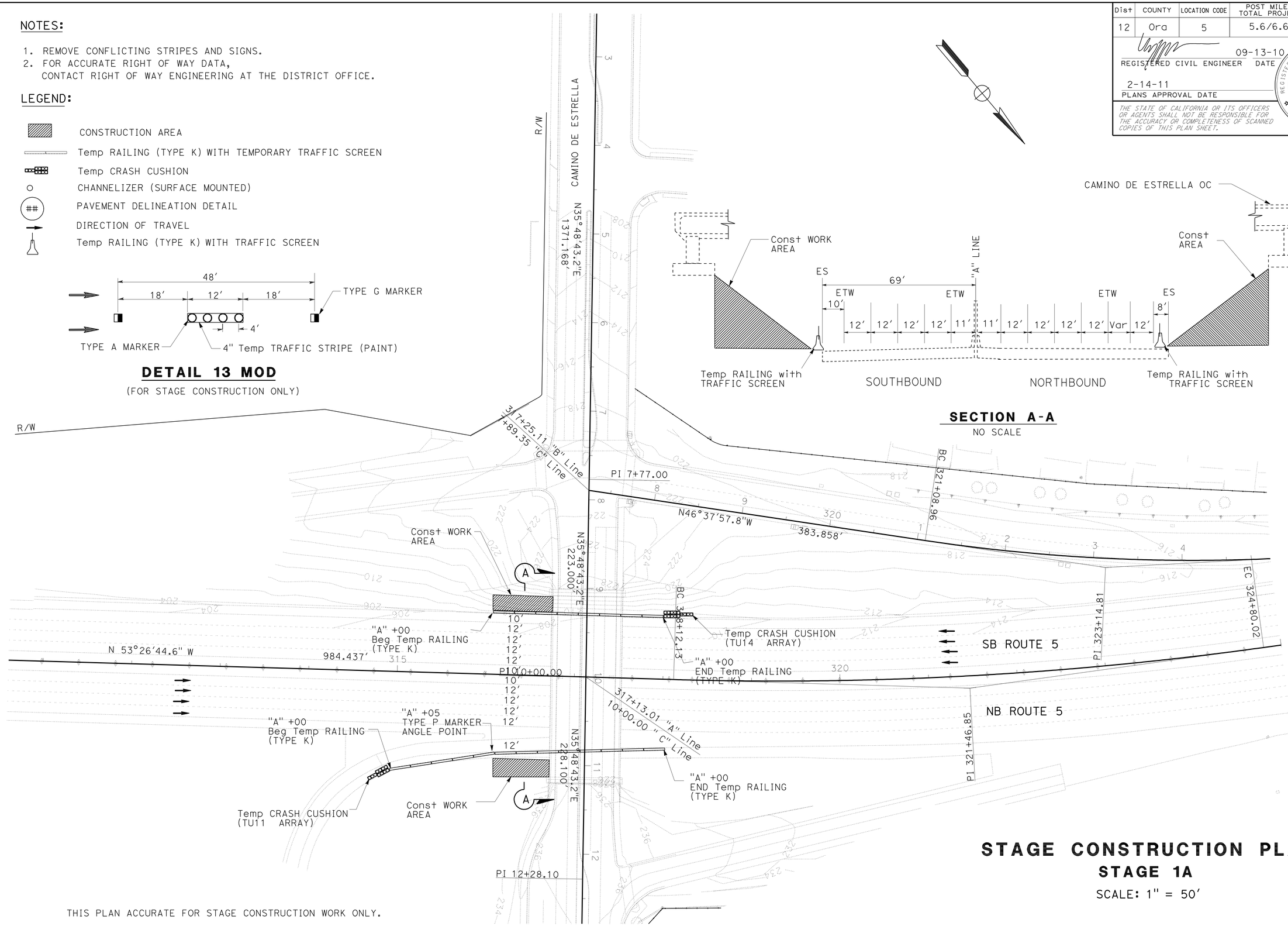

STAGE CONSTRUCTION PLAN

STAGE 1A

SCALE: 1" = 50'

SC-1

THIS PLAN ACCURATE FOR STAGE CONSTRUCTION WORK ONLY.

REVISED BY	DATE REVISED
JOSEPH LEE	03-18-10
QUAN TRINH	03-18-10

CALCULATED-DESIGNED BY: JOSEPH LEE
CHECKED BY: QUAN TRINH
FUNCTIONAL SUPERVISOR: MILI LIM STAMATION

STATE OF CALIFORNIA - DEPARTMENT OF TRANSPORTATION
Caltrans
DESIGN

LAST REVISION 03-18-10
DATE PLOTTED => 17-FEB-2011
TIME PLOTTED => 07:58

Dist	COUNTY	LOCATION CODE	POST MILES TOTAL PROJECT	SHEET No.	TOTAL SHEETS
12	Ora	5	5.6/6.6	41	154

REGISTERED CIVIL ENGINEER 09-13-10 DATE

2-14-11
PLANS APPROVAL DATE

REGISTERED PROFESSIONAL ENGINEER JOSEPH LEE No. C59058 Exp. 6/30/11 CIVIL STATE OF CALIFORNIA

THE STATE OF CALIFORNIA OR ITS OFFICERS OR AGENTS SHALL NOT BE RESPONSIBLE FOR THE ACCURACY OR COMPLETENESS OF SCANNED COPIES OF THIS PLAN SHEET.

NOTE:

FOR ACCURATE RIGHT OF WAY DATA, CONTACT RIGHT OF WAY ENGINEERING AT THE DISTRICT OFFICE.

SECTION B-B
NO SCALE

SECTION C-C
NO SCALE

SECTION D-D
NO SCALE

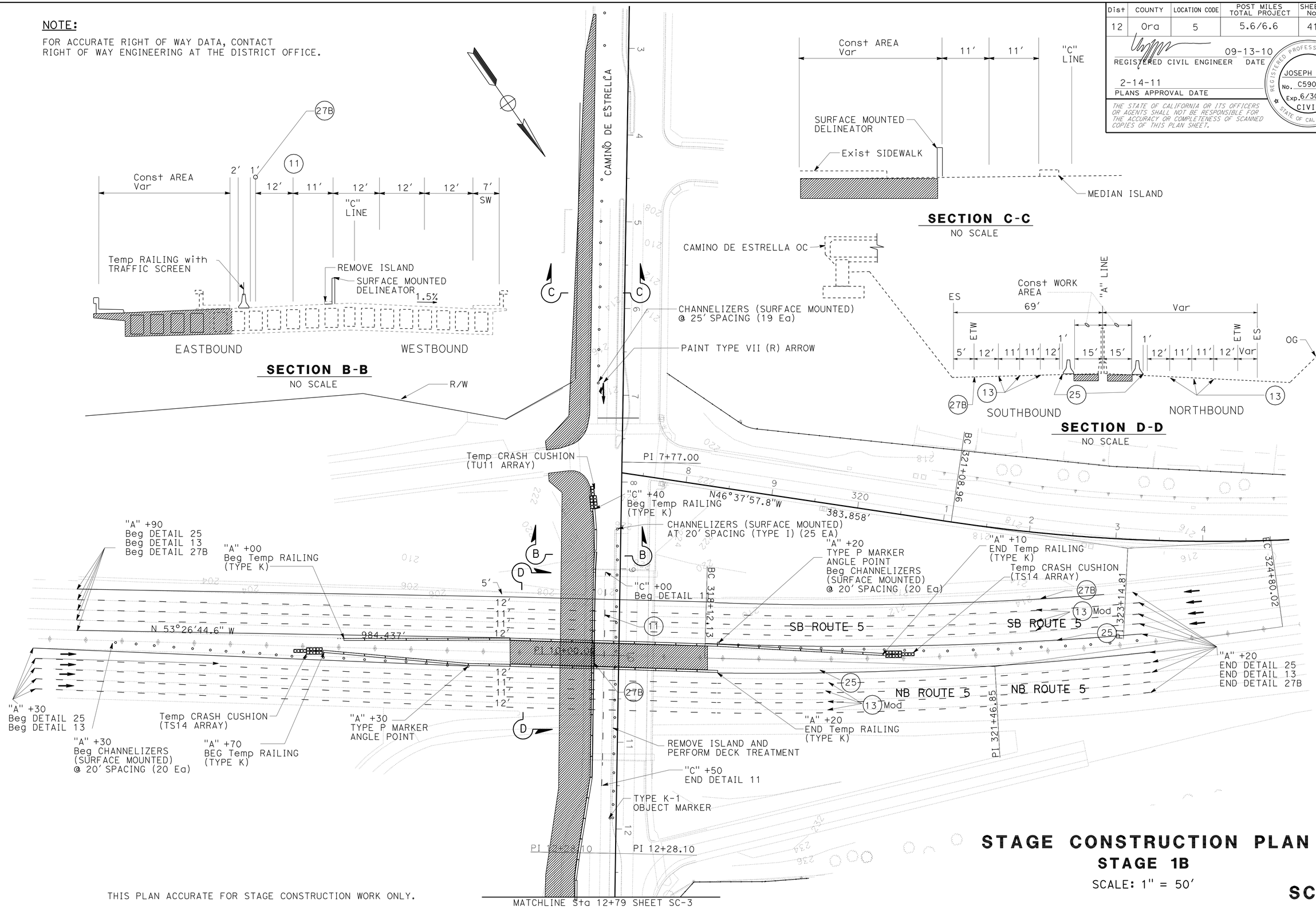

THIS PLAN ACCURATE FOR STAGE CONSTRUCTION WORK ONLY.

STAGE CONSTRUCTION PLAN

STAGE 1B

SCALE: 1" = 50′

SC-2

REVISED BY	DATE REVISED	JOSEPH LEE	QUAN TRINH	CALCULATED-DESIGNED BY	CHECKED BY	FUNCTIONAL SUPERVISOR	MILI LIM STAMATION
03-18-10	03-18-10						

STATE OF CALIFORNIA - DEPARTMENT OF TRANSPORTATION
Caltrans
DESIGN

LAST REVISION 03-18-10
DATE PLOTTED => 17-FEB-2011
TIME PLOTTED => 07:59

Dist	COUNTY	LOCATION CODE	POST MILES TOTAL PROJECT	SHEET No.	TOTAL SHEETS
12	Ora	5	5.6/6.6	42	154

REGISTERED CIVIL ENGINEER 09-13-10 DATE

2-14-11
PLANS APPROVAL DATE

REGISTERED PROFESSIONAL ENGINEER
JOSEPH LEE
No. C59058
Exp. 6/30/11
CIVIL
STATE OF CALIFORNIA

THE STATE OF CALIFORNIA OR ITS OFFICERS OR AGENTS SHALL NOT BE RESPONSIBLE FOR THE ACCURACY OR COMPLETENESS OF SCANNED COPIES OF THIS PLAN SHEET.

NOTE:

FOR ACCURATE RIGHT OF WAY DATA, CONTACT
RIGHT OF WAY ENGINEERING AT THE DISTRICT OFFICE.

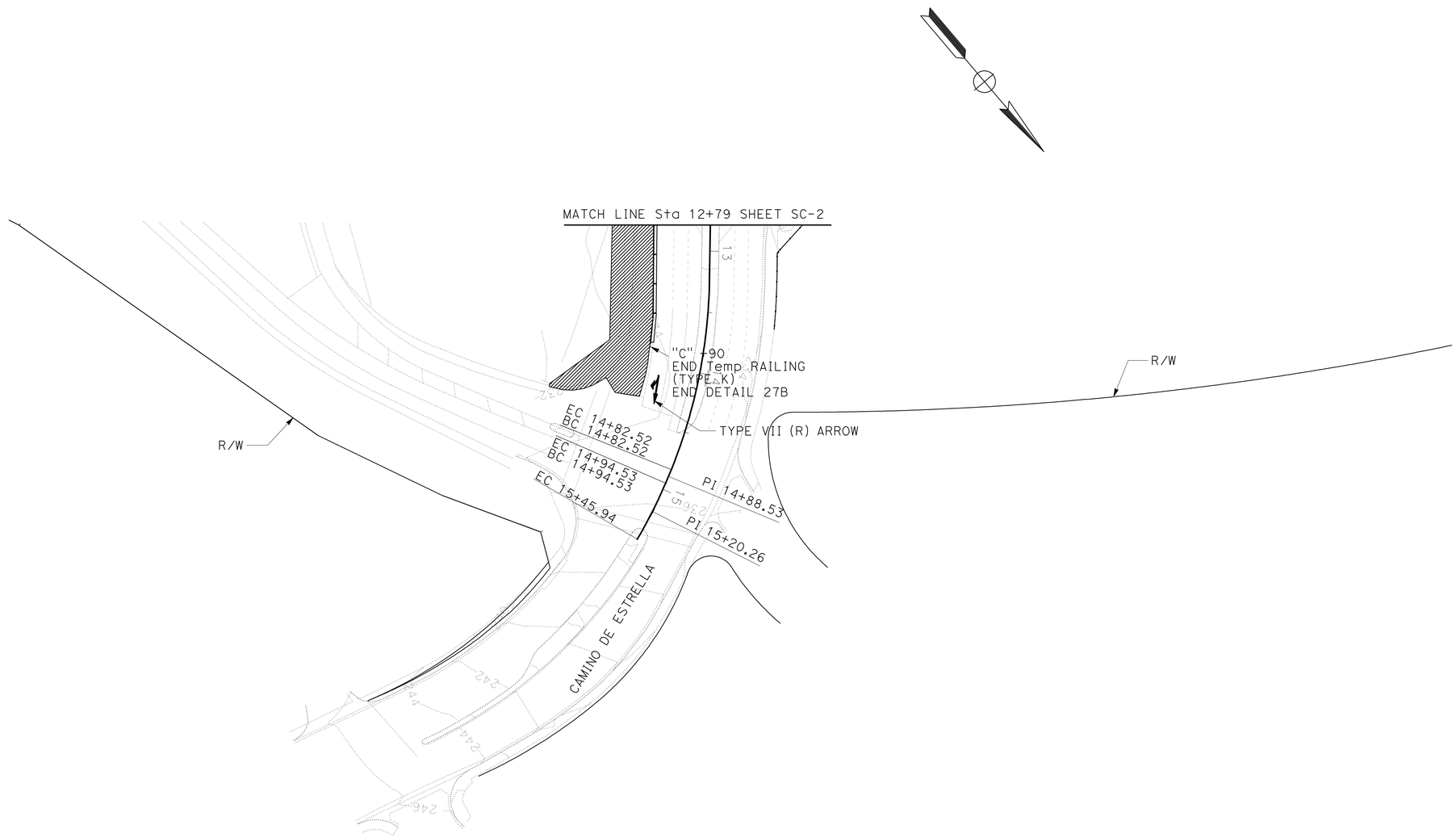

THIS PLAN ACCURATE FOR STAGE CONSTRUCTION WORK ONLY.

STAGE CONSTRUCTION PLAN

STAGE 1B

SCALE: 1" = 50'

SC-3

REVISED BY	DATE REVISED
JOSEPH LEE	03-18-10
QUAN TRINH	03-18-10

CALCULATED-DESIGNED BY
CHECKED BY

FUNCTIONAL SUPERVISOR
MILI LIM STAMATION

STATE OF CALIFORNIA - DEPARTMENT OF TRANSPORTATION
Caltrans
DESIGN

LAST REVISION 03-18-10
DATE PLOTTED => 17-FEB-2011
TIME PLOTTED => 07:59

Dist	COUNTY	LOCATION CODE	POST MILES TOTAL PROJECT	SHEET No.	TOTAL SHEETS
12	Ora	5	5.6/6.6	43	154

REGISTERED CIVIL ENGINEER 09-13-10 DATE

2-14-11
PLANS APPROVAL DATE

REGISTERED PROFESSIONAL ENGINEER
JOSEPH LEE
No. C59058
Exp. 6/30/11
CIVIL
STATE OF CALIFORNIA

THE STATE OF CALIFORNIA OR ITS OFFICERS OR AGENTS SHALL NOT BE RESPONSIBLE FOR THE ACCURACY OR COMPLETENESS OF SCANNED COPIES OF THIS PLAN SHEET.

NOTE:

FOR ACCURATE RIGHT OF WAY DATA, CONTACT RIGHT OF WAY ENGINEERING AT THE DISTRICT OFFICE.

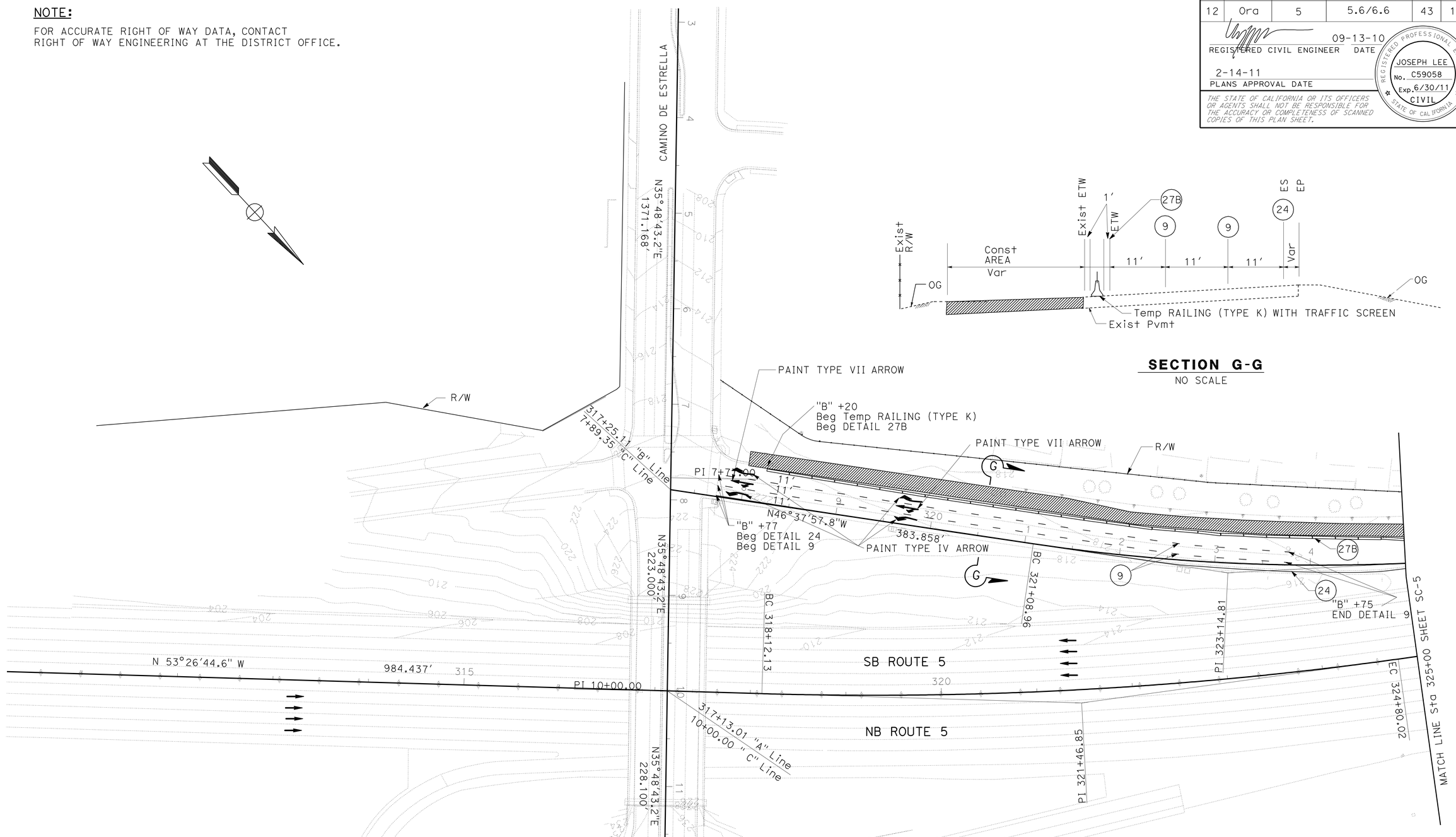

SECTION G-G
NO SCALE

STAGE CONSTRUCTION PLAN
STAGE 2
SCALE: 1" = 50'

SC-4

THIS PLAN ACCURATE FOR STAGE CONSTRUCTION WORK ONLY.

REVISED BY	DATE REVISED
JOSEPH LEE	03-18-10
QUAN TRINH	03-18-10

CALCULATED-DESIGNED BY
CHECKED BY

FUNCTIONAL SUPERVISOR
MILI LIM STAMATION

STATE OF CALIFORNIA - DEPARTMENT OF TRANSPORTATION
Caltrans
DESIGN

LAST REVISION 03-18-10
DATE PLOTTED => 17-FEB-2011
TIME PLOTTED => 07:59

Dist	COUNTY	LOCATION CODE	POST MILES TOTAL PROJECT	SHEET No.	TOTAL SHEETS
12	Ora	5	5.6/6.6	44	154

REGISTERED CIVIL ENGINEER 09-13-10 DATE

2-14-11
PLANS APPROVAL DATE

REGISTERED PROFESSIONAL ENGINEER
JOSEPH LEE
No. C59058
Exp. 6/30/11
CIVIL
STATE OF CALIFORNIA

THE STATE OF CALIFORNIA OR ITS OFFICERS OR AGENTS SHALL NOT BE RESPONSIBLE FOR THE ACCURACY OR COMPLETENESS OF SCANNED COPIES OF THIS PLAN SHEET.

NOTE:

FOR ACCURATE RIGHT OF WAY DATA, CONTACT RIGHT OF WAY ENGINEERING AT THE DISTRICT OFFICE.

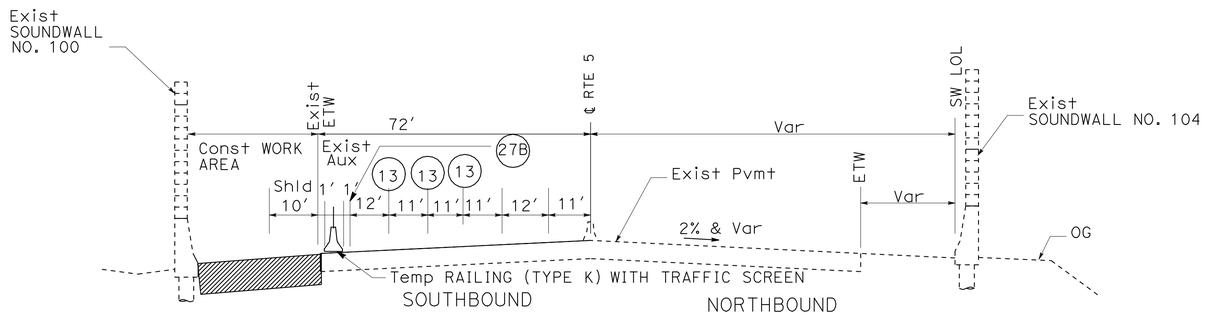

SECTION E-E

NO SCALE

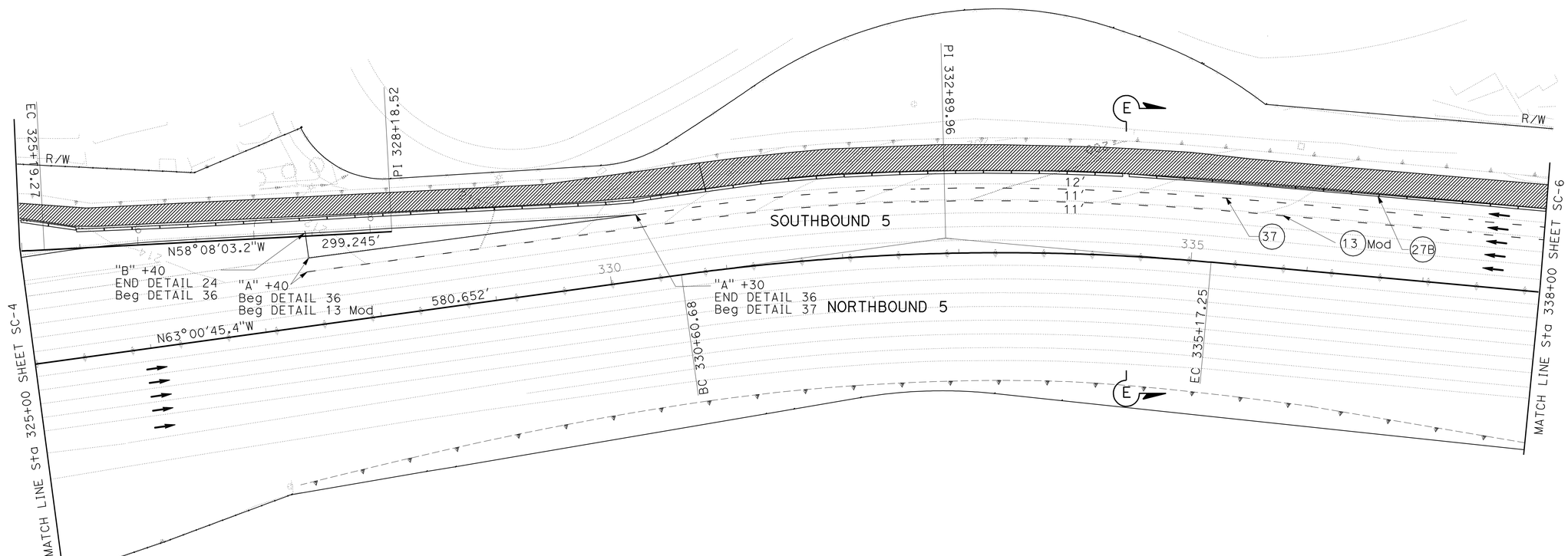

STAGE CONSTRUCTION PLAN

STAGE 2

SCALE: 1" = 50'

THIS PLAN ACCURATE FOR STAGE CONSTRUCTION WORK ONLY.

SC-5

REVISED BY	DATE REVISED
JOSEPH LEE	03-18-10

CALCULATED-DESIGNED BY: JOSEPH LEE
CHECKED BY: QUAN TRINH
FUNCTIONAL SUPERVISOR: MILI LIM STAMATION

STATE OF CALIFORNIA - DEPARTMENT OF TRANSPORTATION
Caltrans
DESIGN

LAST REVISION 03-18-10
DATE PLOTTED => 17-FEB-2011
TIME PLOTTED => 07:59

Dist	COUNTY	LOCATION CODE	POST MILES TOTAL PROJECT	SHEET No.	TOTAL SHEETS
12	Ora	5	5.6/6.6	45	154

REGISTERED CIVIL ENGINEER 09-13-10 DATE

2-14-11
PLANS APPROVAL DATE

REGISTERED PROFESSIONAL ENGINEER
JOSEPH LEE
No. C59058
Exp. 6/30/11
CIVIL
STATE OF CALIFORNIA

THE STATE OF CALIFORNIA OR ITS OFFICERS OR AGENTS SHALL NOT BE RESPONSIBLE FOR THE ACCURACY OR COMPLETENESS OF SCANNED COPIES OF THIS PLAN SHEET.

NOTE:

FOR ACCURATE RIGHT OF WAY DATA, CONTACT RIGHT OF WAY ENGINEERING AT THE DISTRICT OFFICE.

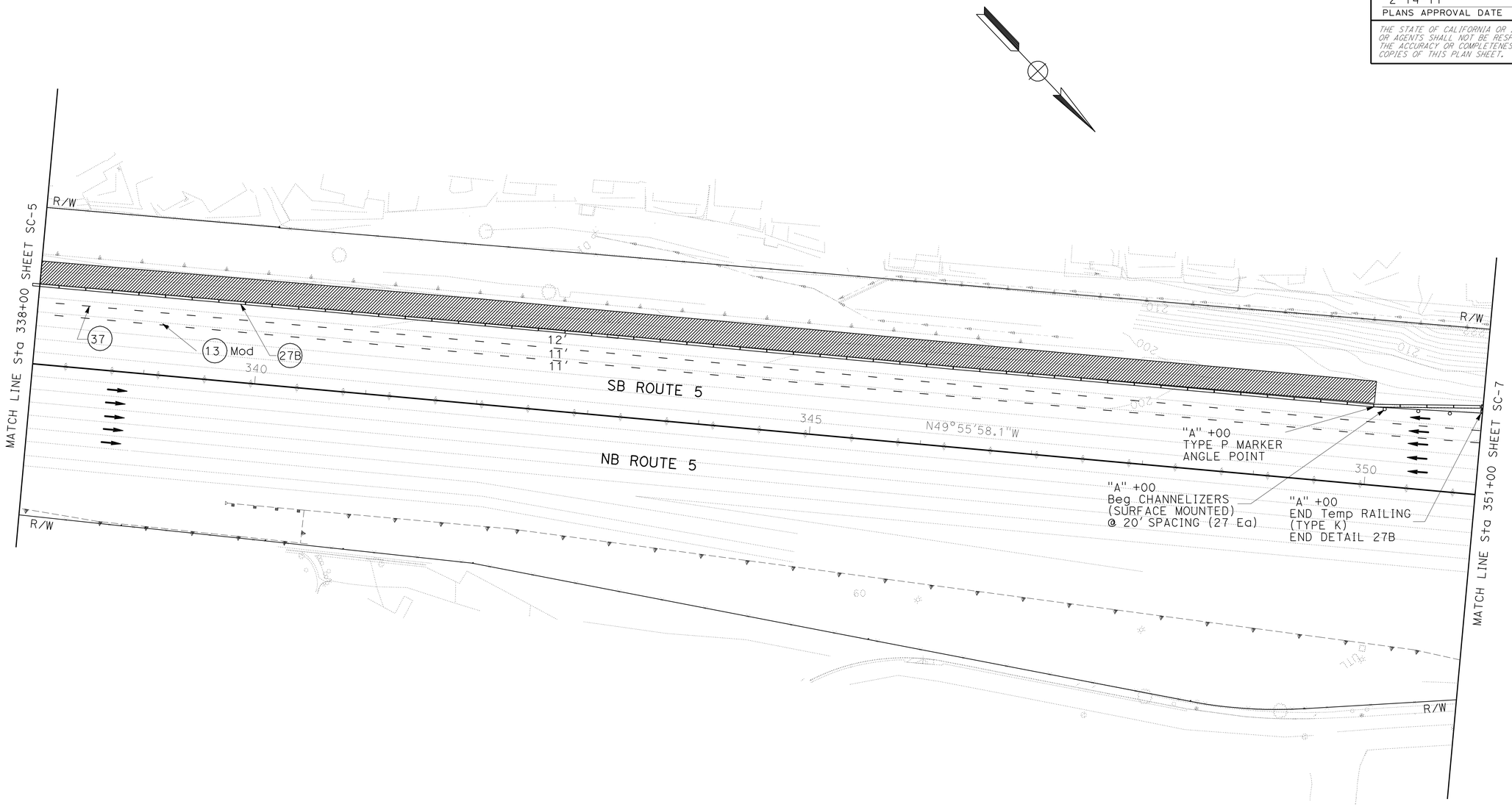

STAGE CONSTRUCTION PLAN

STAGE 2

SCALE: 1" = 50'

THIS PLAN ACCURATE FOR STAGE CONSTRUCTION WORK ONLY.

SC-6

STATE OF CALIFORNIA - DEPARTMENT OF TRANSPORTATION
Caltrans
DESIGN

FUNCTIONAL SUPERVISOR: MILI LIM STAMATION
CALCULATED-DESIGNED BY: JOSEPH LEE
CHECKED BY: QUAN TRINH
REVISED BY: 03-18-10
DATE REVISED: 03-18-10

LAST REVISION 03-18-10
DATE PLOTTED => 17-FEB-2011
TIME PLOTTED => 07:59

Dist	COUNTY	LOCATION CODE	POST MILES TOTAL PROJECT	SHEET No.	TOTAL SHEETS
12	Ora	5	5.6/6.6	46	154

REGISTERED CIVIL ENGINEER DATE 09-13-10

2-14-11
PLANS APPROVAL DATE

REGISTERED PROFESSIONAL ENGINEER
JOSEPH LEE
No. C59058
Exp. 6/30/11
CIVIL
STATE OF CALIFORNIA

THE STATE OF CALIFORNIA OR ITS OFFICERS OR AGENTS SHALL NOT BE RESPONSIBLE FOR THE ACCURACY OR COMPLETENESS OF SCANNED COPIES OF THIS PLAN SHEET.

NOTE:

FOR ACCURATE RIGHT OF WAY DATA, CONTACT
RIGHT OF WAY ENGINEERING AT THE DISTRICT OFFICE.

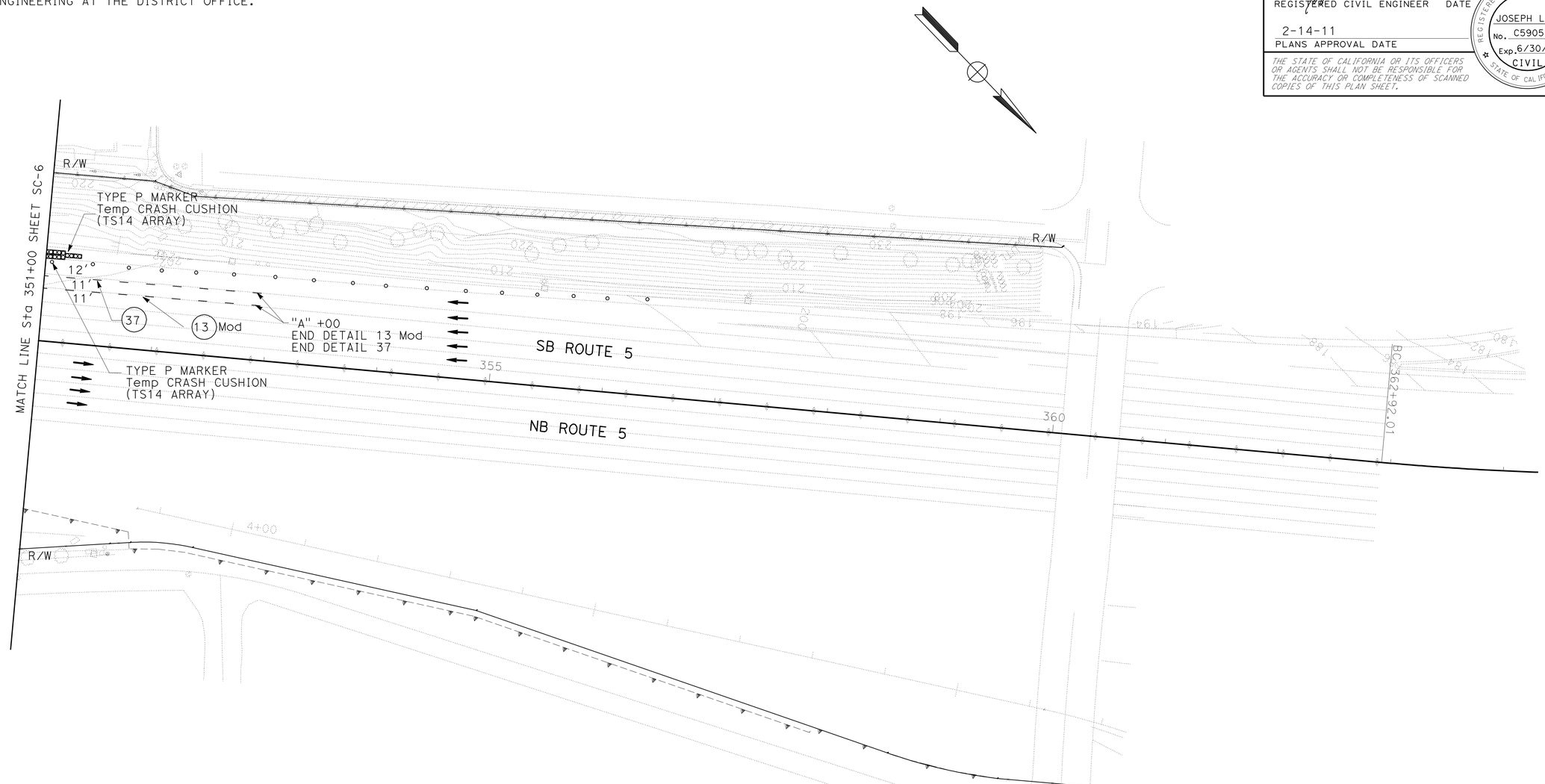

STAGE CONSTRUCTION PLAN

STAGE 2

SCALE: 1" = 50'

THIS PLAN ACCURATE FOR STAGE CONSTRUCTION WORK ONLY.

SC-7

REVISED BY	DATE REVISED
JOSEPH LEE	03-18-10
QUAN TRINH	03-18-10

CALCULATED-DESIGNED BY
CHECKED BY

FUNCTIONAL SUPERVISOR
MILI LIM STAMATION

STATE OF CALIFORNIA - DEPARTMENT OF TRANSPORTATION
Caltrans
DESIGN

LAST REVISION 03-18-10
DATE PLOTTED => 17-FEB-2011
TIME PLOTTED => 07:59

Dist	COUNTY	LOCATION CODE	POST MILES TOTAL PROJECT	SHEET No.	TOTAL SHEETS
12	Ora	5	5.6/6.6	47	154

REGISTERED CIVIL ENGINEER DATE 09-13-10

2-14-11
PLANS APPROVAL DATE

REGISTERED PROFESSIONAL ENGINEER
JOSEPH LEE
No. C59058
Exp. 6/30/11
CIVIL
STATE OF CALIFORNIA

THE STATE OF CALIFORNIA OR ITS OFFICERS OR AGENTS SHALL NOT BE RESPONSIBLE FOR THE ACCURACY OR COMPLETENESS OF SCANNED COPIES OF THIS PLAN SHEET.

NOTE:

FOR ACCURATE RIGHT OF WAY DATA, CONTACT RIGHT OF WAY ENGINEERING AT THE DISTRICT OFFICE.

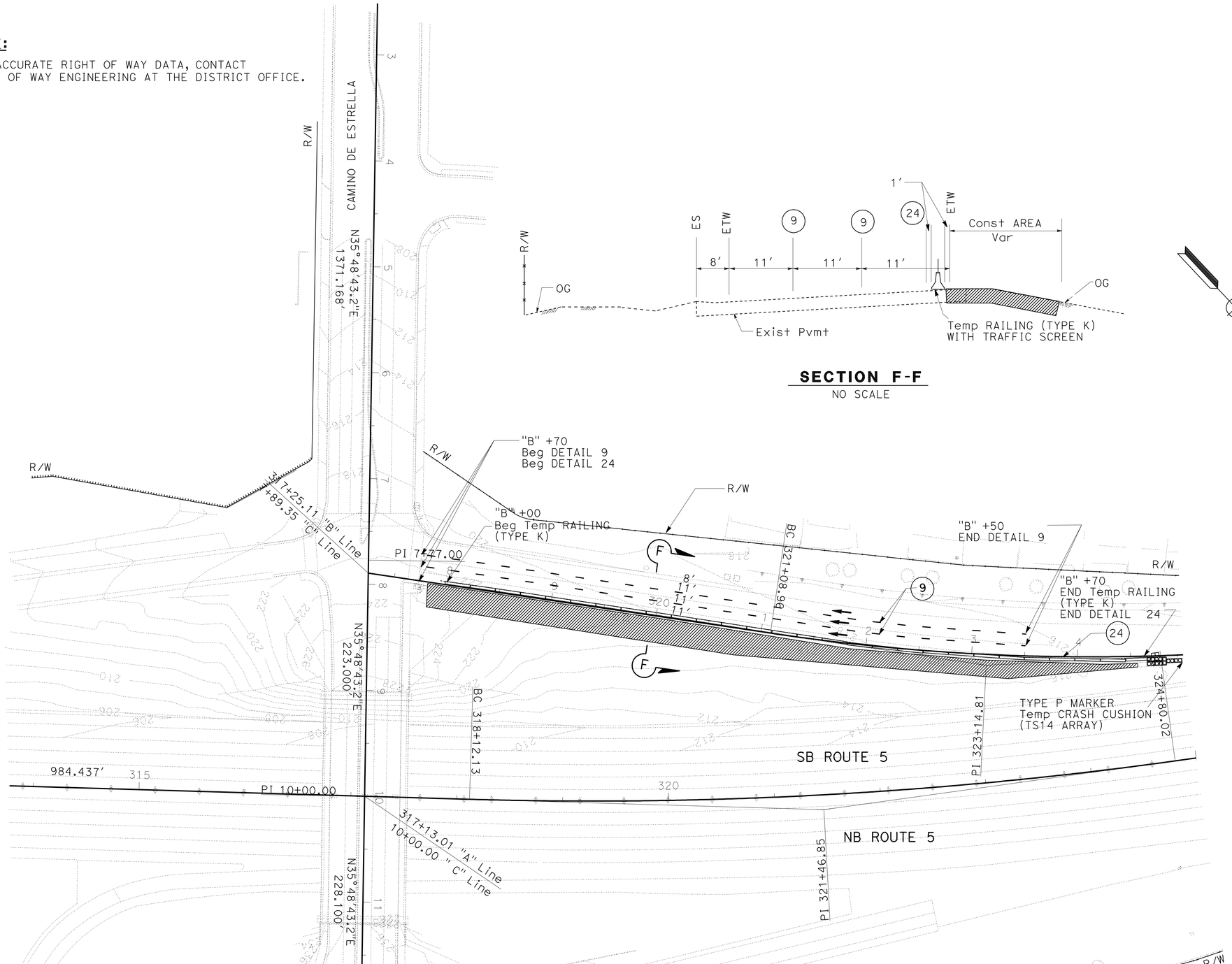

SECTION F-F
NO SCALE

THIS PLAN ACCURATE FOR STAGE CONSTRUCTION WORK ONLY.

STAGE CONSTRUCTION PLAN
STAGE 3
SCALE: 1" = 50'

SC-8

REVISED BY	DATE REVISED
JOSEPH LEE	03-18-10
QUAN TRINH	03-18-10

CALCULATED-DESIGNED BY
CHECKED BY
FUNCTIONAL SUPERVISOR
MILI LIM STAMATION

STATE OF CALIFORNIA - DEPARTMENT OF TRANSPORTATION
Caltrans
DESIGN

LAST REVISION 03-18-10
DATE PLOTTED => 17-FEB-2011
TIME PLOTTED => 07:59

Dist	COUNTY	ROUTE	POST MILES TOTAL PROJECT	SHEET No.	TOTAL SHEETS
12	Ora	5	5.6/6.6	48	154

REGISTERED CIVIL ENGINEER 09-13-10 DATE

2-14-11
PLANS APPROVAL DATE

REGISTERED PROFESSIONAL ENGINEER JOSEPH LEE No. C59058 Exp. 6/30/11 CIVIL STATE OF CALIFORNIA

THE STATE OF CALIFORNIA OR ITS OFFICERS OR AGENTS SHALL NOT BE RESPONSIBLE FOR THE ACCURACY OR COMPLETENESS OF SCANNED COPIES OF THIS PLAN SHEET.

TEMPORARY PAVEMENT DELINEATION QUANTITIES

SHEET NUMBER	TEMPORARY PAVEMENT DELINEATION												TEMPORARY PAVEMENT MARKING (PAINT)	REMOVE EXISTING PAVEMENT DELINEATION (N)	TRAFFIC CONTROL DEVICES						
	TEMPORARY TRAFFIC STRIPE (PAINT)								TEMPORARY PAVEMENT MARKER						TEMP RAILING (TYPE K)	TEMP TRAFFIC SCREEN	TEMP CRASH CUSHION MODULE			CHANNELIZER (SURFACE MOUNTED)	OBJECT MARKER (TYPE K-1)
	DETAIL 9	DETAIL 11	DETAIL 13 Mod	DETAIL 25	DETAIL 27B	DETAIL 24	DETAIL 36	DETAIL 37	NON-REFLECTIVE TYPE A	RETROREFLECTIVE TYPE C	RETROREFLECTIVE TYPE G	RETROREFLECTIVE TYPE H	ARROW WHITE				(TU11)	(TS14)	(TU14)		
	LF	LF	LF	LF	LF	LF	LF	LF	EA	EA	EA	EA	SQFT	LF	LF	LF	EA	EA	EA	EA	EA
SC-1															520	520	11		14		
SC-2		250	8850	2520	1669				740		370	106	27	13289	760	760	11		28	59	1
SC-3					111									111	120	120					
SC-4	1196				700	723					52		114	2619	680	680					
SC-5			1060		1300	240	290	770		51	150			3660	1300	1300					
SC-6			1300		1300			1300	88	56	106			3900	1300	1300				5	
SC-7			200					200	20	16	14			400				14		27	
SC-8	1160					700					50			1860	670	670		14			
SUBTOTAL	2356	250	11410	2520	5080	1663	290	2270	848	123	742	106	141	25,839	5350	5350	22	28	42	91	1
TOTAL	25,839								1819				141	25,839	5350	5350	92			91	1

(N) NOT A SEPARATE PAY ITEM, FOR INFORMATION ONLY.

STAGE CONSTRUCTION QUANTITIES

SCQ-1

REVISED BY	DATE REVISED	CALCULATED-DESIGNED BY	CHECKED BY	FUNCTIONAL SUPERVISOR
04-20-10	04-20-10	JOSEPH LEE	QUAN TRINH	MILI LIM STAMATION

STATE OF CALIFORNIA - DEPARTMENT OF TRANSPORTATION
Caltrans DESIGN

LAST REVISION 06-22-09 | DATE PLOTTED => 17-FEB-2011 | TIME PLOTTED => 07:59

Dist	COUNTY	LOCATION CODE	POST MILES TOTAL PROJECT	SHEET No.	TOTAL SHEETS
12	Ora	5	5.6/6.6	49	154

REGISTERED CIVIL ENGINEER 09-13-10 DATE

2-14-11
PLANS APPROVAL DATE

REGISTERED PROFESSIONAL ENGINEER JOSEPH LEE No. C59058 Exp. 6/30/11 CIVIL STATE OF CALIFORNIA

THE STATE OF CALIFORNIA OR ITS OFFICERS OR AGENTS SHALL NOT BE RESPONSIBLE FOR THE ACCURACY OR COMPLETENESS OF SCANNED COPIES OF THIS PLAN SHEET.

NOTES:

1. LOCATIONS OF CONSTRUCTION DETOUR SIGNS AND PORTABLE CHANGEABLE MESSAGE SIGNS (PCMS) ARE APPROXIMATE.
2. CONSTRUCTION DETOUR SIGNS SHALL BE LOCATED APPROXIMATELY 75 FEET AWAY FROM THE INTERSECTION.
3. MESSAGES ON PCMS AND EXACT LOCATIONS WILL BE DETERMINED BY THE ENGINEER.

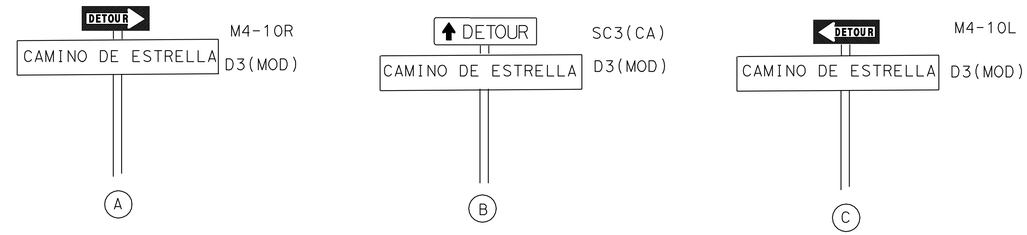

LEGENDS:

- DIRECTION OF TRAFFIC
- SIGN 1-POST
- CONSTRUCTION DETOUR SIGN
- PORTABLE CHANGEABLE MESSAGE SIGN (PCMS)

CLOSURE:

1. SB ROUTE 5 CAMINO DE ESTRELLA OFF-RAMP

DETOURS:

1a. SB ROUTE 5 TO CAMINO LAS RAMBLAS OFF-RAMP
TO CALLE VELEZ TO CALLE NARANJA TO CAMINO DE ESTRELLA

1b. SB ROUTE 5 TO AVENIDA VISTA HERMOSA OFF-RAMP TO
CALLE FRONTERA TO CALLE JUAREZ TO CALLE GUADALAJARA
TO CALLE VAQUERO TO CAMERO DE LOS MARES
TO CAMINO DE ESTRELLA

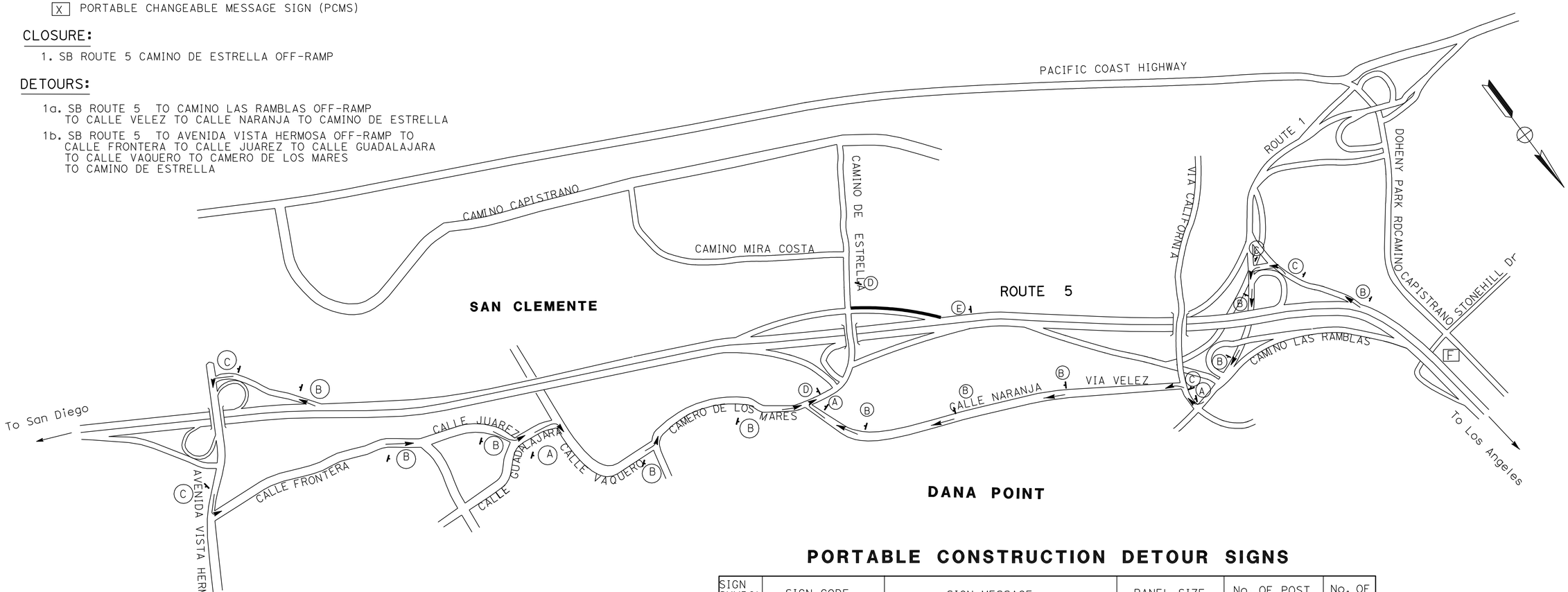

PORTABLE CONSTRUCTION DETOUR SIGNS

SIGN SYMBOL	SIGN CODE	SIGN MESSAGE	PANEL SIZE	No. OF POST AND SIZE	No. OF SIGNS
A	M4-10R/D3(MOD)	DETOUR (RT)/CAMINO DE ESTRELLA	48" X 18"	1 - 6" X 6"	3
B	SC3(CA)/D3(MOD)	DETOUR/CAMINO DE ESTRELLA	48" X 18"	1 - 6" X 6"	11
C	M4-10L/D3(MOD)	DETOUR (LT)/CAMINO DE ESTRELLA	48" X 18"	1 - 6" X 6"	5
D	M4-8a	END DETOUR	30" X 18"	1 - 4" X 4"	2
E	SC6-4 (CA)	RAMP CLOSED	48" X 30"	1 - 4" X 4"	1

TRAFFIC HANDLING PLAN
(DETOUR)
(SB CAMINO DE ESTRELLA OFF-RAMP)

NO SCALE

TH-1

THIS PLAN ACCURATE FOR TRAFFIC HANDLING WORK ONLY

REVISED BY	DATE REVISED
NK	04-15-10

CALCULATED-DESIGNED BY: NYCHOLE KHONG
CHECKED BY: JOSEPH LEE
FUNCTIONAL SUPERVISOR: MILI LIM STAMATION

STATE OF CALIFORNIA - DEPARTMENT OF TRANSPORTATION
Caltrans
DESIGN

LAST REVISION 07-12-10 | DATE PLOTTED => 17-FEB-2011 | TIME PLOTTED => 08:00

Dist	COUNTY	LOCATION CODE	POST MILES TOTAL PROJECT	SHEET No.	TOTAL SHEETS
12	Ora	5	5.6/6.6	50	154

REGISTERED CIVIL ENGINEER 09-13-10 DATE

2-14-11
PLANS APPROVAL DATE

REGISTERED PROFESSIONAL ENGINEER JOSEPH LEE No. C59058 Exp. 6/30/11 CIVIL STATE OF CALIFORNIA

THE STATE OF CALIFORNIA OR ITS OFFICERS OR AGENTS SHALL NOT BE RESPONSIBLE FOR THE ACCURACY OR COMPLETENESS OF SCANNED COPIES OF THIS PLAN SHEET.

NOTE: LOCATION OF CONSTRUCTION AREA SIGNS ARE APPROXIMATE, EXACT SIGN LOCATIONS TO BE DETERMINED BY THE ENGINEER.

STATIONARY MOUNTED CONSTRUCTION AREA SIGNS (DETOURS)

SIGN SYMBOL	SIGN CODE	PANEL SIZE	SIGN MESSAGE	No. OF POST AND SIZE	No. OF SIGNS
Ⓡ	R9-11(Rt)	24" x 12"	SIDEWALK CLOSED AHEAD (With Rt Arrow) CROSS HERE	TYPE III BARRICADE	1
Ⓢ	R9-11(Lt)	24" x 12"	SIDEWALK CLOSED AHEAD (With Lt Arrow) CROSS HERE	TYPE III BARRICADE	1
Ⓣ	R9-9	24" x 18"	SIDEWALK CLOSED AHEAD	TYPE III BARRICADE	2
Ⓤ	R9-9 (Mod)	24" x 18"	SIDEWALK CLOSED	TYPE III BARRICADE	2

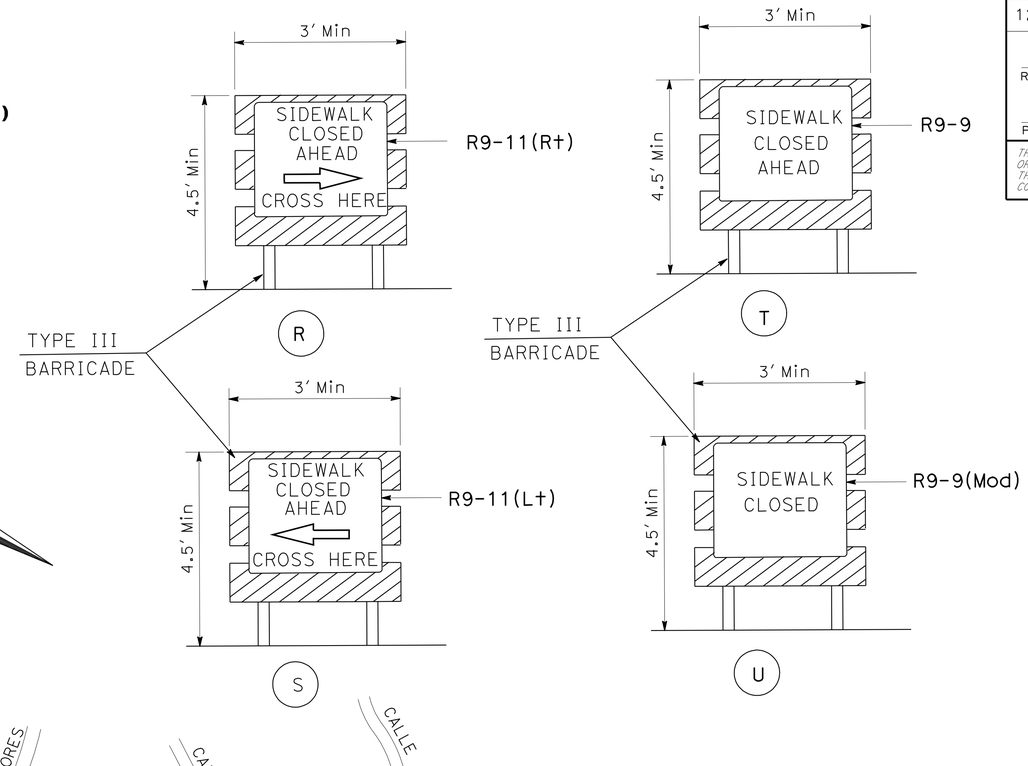

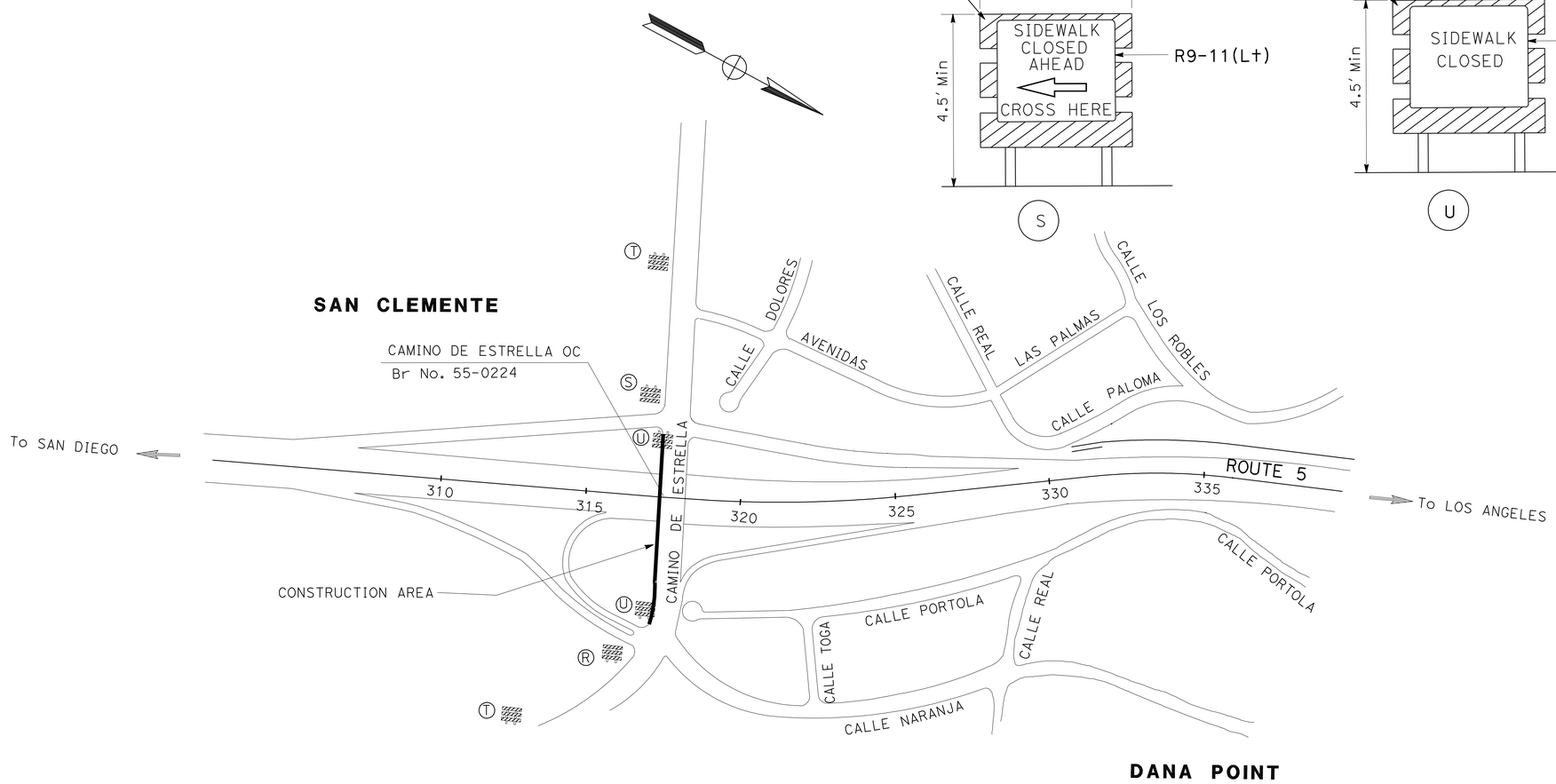

TRAFFIC HANDLING PLAN
(DETOUR)
(PEDESTRIAN CROSSING AND BIKE LANE)
(CAMINO DE ESTRELLA)

NO SCALE

THIS PLAN ACCURATE FOR TRAFFIC HANDLING WORK ONLY

TH-2

STATE OF CALIFORNIA - DEPARTMENT OF TRANSPORTATION
Caltrans® DESIGN
FUNCTIONAL SUPERVISOR: MILI LIM STAMATION
CALCULATED-DESIGNED BY: NYCHOLE KHONG
CHECKED BY: JOSEPH LEE
REVISED BY: NK
DATE REVISED: 04-15-10

LAST REVISION 07-12-10 | DATE PLOTTED => 17-FEB-2011 | TIME PLOTTED => 08:00

Dist	COUNTY	ROUTE	POST MILES TOTAL PROJECT	SHEET No.	TOTAL SHEETS
12	Ora	5	5.6/6.6	51	154

Mostafa Aliakbarzadeh 09-13-10
REGISTERED CIVIL ENGINEER DATE

2-14-11
PLANS APPROVAL DATE

REGISTERED PROFESSIONAL ENGINEER
MOSTAFA ALIAKBARZADEH
No. C53003
Exp. 3-31-11
CIVIL
STATE OF CALIFORNIA

THE STATE OF CALIFORNIA OR ITS OFFICERS OR AGENTS SHALL NOT BE RESPONSIBLE FOR THE ACCURACY OR COMPLETENESS OF SCANNED COPIES OF THIS PLAN SHEET.

LEGEND:

- (X) PAVEMENT DELINEATION DETAIL
- CHANGE IN PAVEMENT DELINEATION
- TYPE G ONE-WAY CLEAR RETROREFLECTIVE MARKER
- TYPE A WHITE NON-REFLECTIVE MARKER
- 4" WHITE THERMOPLASTIC TRAFFIC STRIPE
- DIRECTION OF TRAFFIC

NOTES:

1. ALL CONFLICTING TRAFFIC STRIPE AND PAVEMENT MARKING SHALL BE REMOVED.
2. ALL TRAFFIC STRIPES AND PAVEMENT MARKINGS SHALL BE THERMOPLASTIC UNLESS OTHERWISE NOTED.
3. SEE STANDARD PLAN FOR PAVEMENT MARKING SYMBOLS AND WORDS DETAILS

NOTE:

FOR ACCURATE RIGHT OF WAY DATA, CONTACT RIGHT OF WAY ENGINEERING AT THE DISTRICT OFFICE.

DETAIL 13 MOD

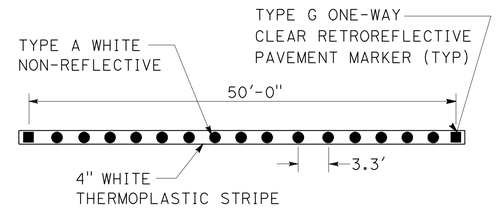

DETAIL A

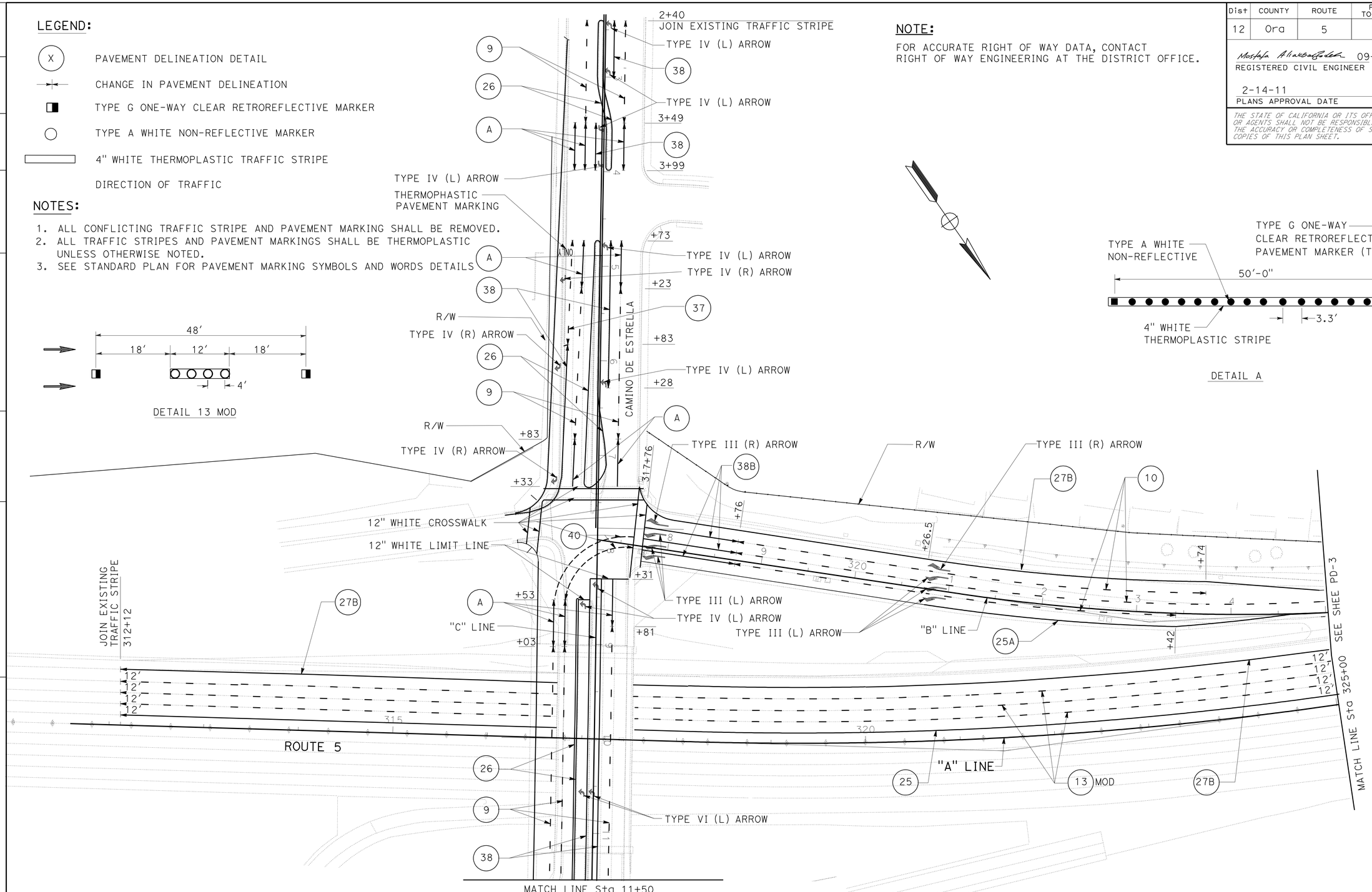

PAVEMENT DELINEATION PLAN

SCALE: 1" = 50'

THIS PLAN ACCURATE FOR PAVEMENT DELINEATION ONLY

PD-1

STATE OF CALIFORNIA - DEPARTMENT OF TRANSPORTATION
Caltrans® DESIGN DIVISION

FUNCTIONAL SUPERVISOR: ADEL MALEK
CALCULATED-DESIGNED BY: RICHARD DANG
CHECKED BY: MOSTAFA ALIAKBARZADEH
REVISED BY / DATE REVISED

LAST REVISION 07-15-10 | DATE PLOTTED => 17-FEB-2011 | TIME PLOTTED => 08:00

Dist	COUNTY	ROUTE	POST MILES TOTAL PROJECT	SHEET No.	TOTAL SHEETS
12	Ora	5	5.6/6.6	52	154

REGISTERED CIVIL ENGINEER 09-13-10 DATE

2-14-11
PLANS APPROVAL DATE

REGISTERED PROFESSIONAL ENGINEER
MOSTAFA ALIAKBARZADEH
No. C53003
Exp. 3-31-11
CIVIL
STATE OF CALIFORNIA

THE STATE OF CALIFORNIA OR ITS OFFICERS OR AGENTS SHALL NOT BE RESPONSIBLE FOR THE ACCURACY OR COMPLETENESS OF SCANNED COPIES OF THIS PLAN SHEET.

NOTE:

FOR ACCURATE RIGHT OF WAY DATA, CONTACT
RIGHT OF WAY ENGINEERING AT THE DISTRICT OFFICE.

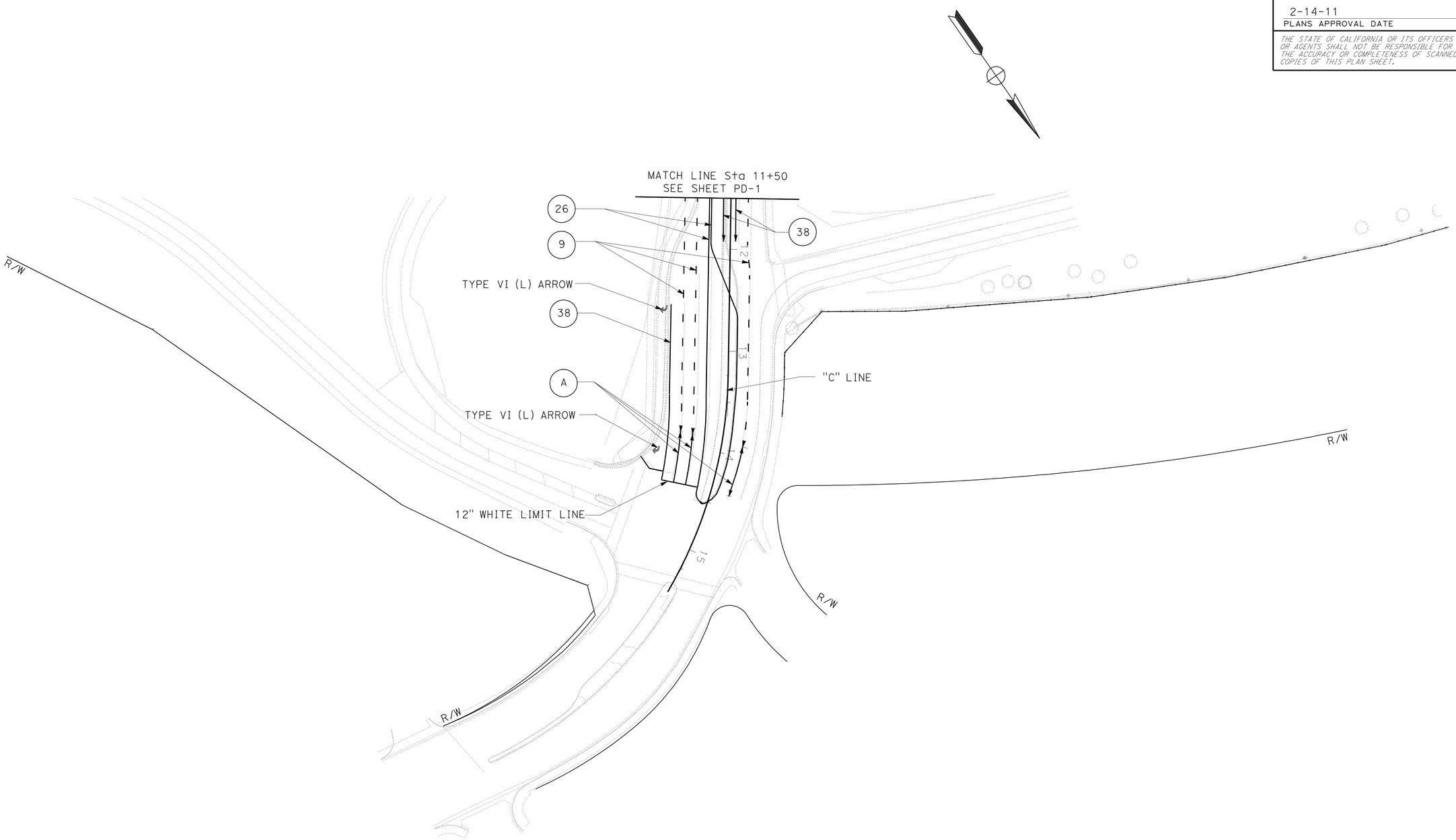

PAVEMENT DELINEATION PLAN

SCALE: 1" = 50'

PD-2

THIS PLAN ACCURATE FOR PAVEMENT DELINEATION ONLY

STATE OF CALIFORNIA - DEPARTMENT OF TRANSPORTATION
Caltrans® DESIGN DIVISION

FUNCTIONAL SUPERVISOR: ADEL MALEK
CALCULATED-DESIGNED BY: RICHARD DANG
CHECKED BY: MOSTAFA ALIAKBARZADEH
REVISED BY
DATE REVISED

LAST REVISION 04-15-10
DATE PLOTTED => 17-FEB-2011
TIME PLOTTED => 08:00

BORDER LAST REVISED 4/11/2008
RELATIVE BORDER SCALE IS IN INCHES 0 1 2 3
USERNAME => trmikesl
DGN FILE => c0f060na002.dgn
CU 12241
EA 0F0601

Dist	COUNTY	ROUTE	POST MILES TOTAL PROJECT	SHEET No.	TOTAL SHEETS
12	Ora	5	5.6/6.6	53	154

Mostafa Aliakbarzadeh 09-13-10
REGISTERED CIVIL ENGINEER DATE

2-14-11
PLANS APPROVAL DATE

REGISTERED PROFESSIONAL ENGINEER
MOSTAFA ALIAKBARZADEH
No. C53003
Exp. 3-31-11
CIVIL
STATE OF CALIFORNIA

THE STATE OF CALIFORNIA OR ITS OFFICERS OR AGENTS SHALL NOT BE RESPONSIBLE FOR THE ACCURACY OR COMPLETENESS OF SCANNED COPIES OF THIS PLAN SHEET.

NOTE:

FOR ACCURATE RIGHT OF WAY DATA, CONTACT
RIGHT OF WAY ENGINEERING AT THE DISTRICT OFFICE.

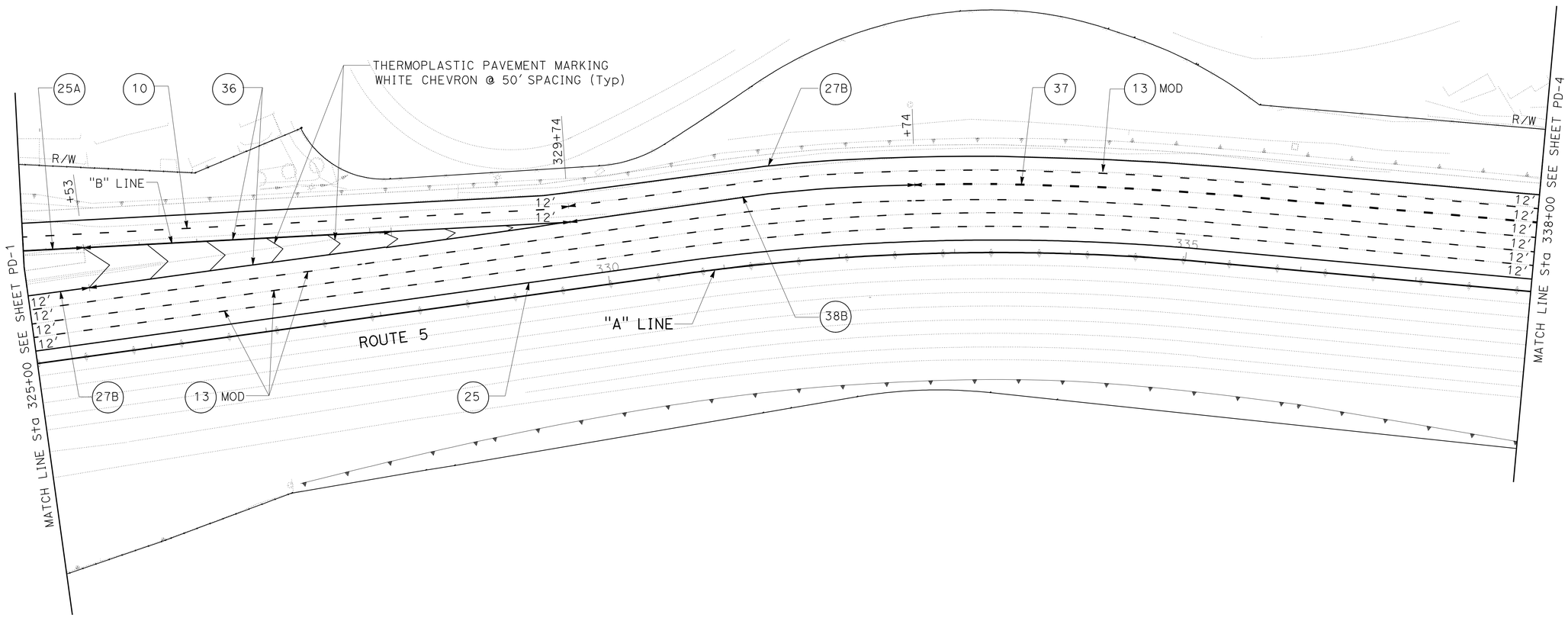

PAVEMENT DELINEATION PLAN

SCALE: 1" = 50'

PD-3

THIS PLAN ACCURATE FOR PAVEMENT DELINEATION ONLY

STATE OF CALIFORNIA - DEPARTMENT OF TRANSPORTATION
Caltrans
DESIGN DIVISION

FUNCTIONAL SUPERVISOR: ADEL MALEK
CALCULATED-DESIGNED BY: RICHARD DANG
CHECKED BY: MOSTAFA ALIAKBARZADEH
REVISED BY
DATE REVISED

LAST REVISION DATE PLOTTED => 17-FEB-2011
07-15-10 TIME PLOTTED => 08:00

Dist	COUNTY	ROUTE	POST MILES TOTAL PROJECT	SHEET No.	TOTAL SHEETS
12	Ora	5	5.6/6.6	54	154

REGISTERED CIVIL ENGINEER 09-13-10 DATE

2-14-11
PLANS APPROVAL DATE

REGISTERED PROFESSIONAL ENGINEER
MOSTAFA ALIAKBARZADEH
No. C53003
Exp. 3-31-11
CIVIL
STATE OF CALIFORNIA

THE STATE OF CALIFORNIA OR ITS OFFICERS OR AGENTS SHALL NOT BE RESPONSIBLE FOR THE ACCURACY OR COMPLETENESS OF SCANNED COPIES OF THIS PLAN SHEET.

NOTE:

FOR ACCURATE RIGHT OF WAY DATA, CONTACT
RIGHT OF WAY ENGINEERING AT THE DISTRICT OFFICE.

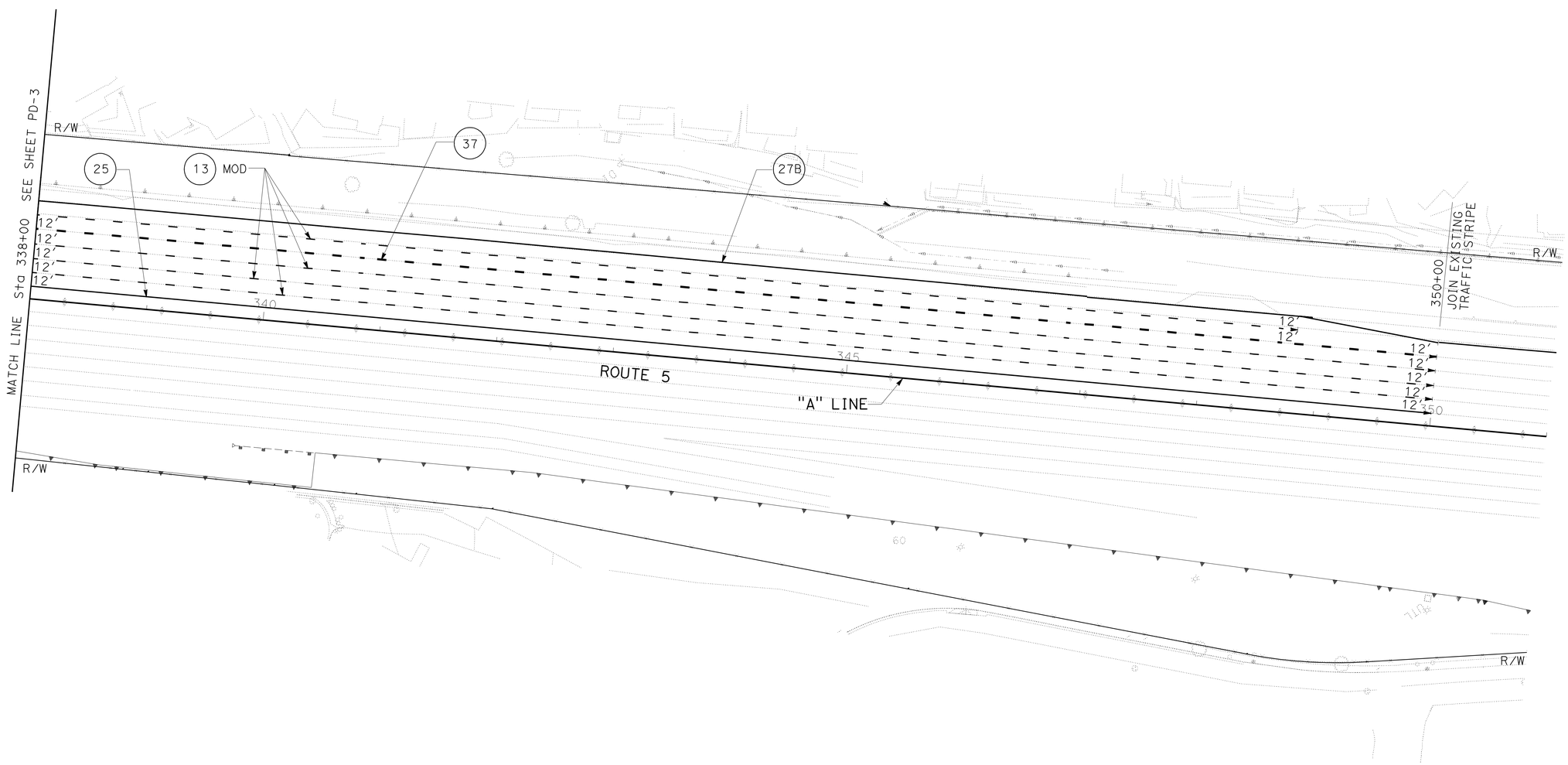

PAVEMENT DELINEATION PLAN

SCALE: 1" = 50'

PD-4

THIS PLAN ACCURATE FOR PAVEMENT DELINEATION ONLY

STATE OF CALIFORNIA - DEPARTMENT OF TRANSPORTATION
Caltrans
DESIGN DIVISION

FUNCTIONAL SUPERVISOR: ADEL MALEK
CALCULATED-DESIGNED BY: RICHARD DANG
CHECKED BY: MOSTAFA ALIAKBARZADEH
REVISED BY
DATE REVISED

LAST REVISION 07-15-10
DATE PLOTTED => 17-FEB-2011
TIME PLOTTED => 08:48

Dist	COUNTY	ROUTE	POST MILES TOTAL PROJECT	SHEET No.	TOTAL SHEETS
12	Ora	5	5.6/6.6	55	154

REGISTERED CIVIL ENGINEER 09-13-10 DATE

2-14-11
PLANS APPROVAL DATE

REGISTERED PROFESSIONAL ENGINEER MOSTAFA ALIAKBARZADEH No. C53003 Exp. 3-31-11 CIVIL STATE OF CALIFORNIA

THE STATE OF CALIFORNIA OR ITS OFFICERS OR AGENTS SHALL NOT BE RESPONSIBLE FOR THE ACCURACY OR COMPLETENESS OF SCANNED COPIES OF THIS PLAN SHEET.

PAVEMENT DELINEATION QUANTITIES

SHEET No.	LOCATION-DESCRIPTION	(N) DETAIL 10	(N) DETAIL 26	4" THERMOPLASTIC TRAFFIC STRIPE DETAIL 40 BROKEN WHITE (6-1)	4" THERMOPLASTIC TRAFFIC STRIPE DETAIL 9 BROKEN WHITE (17-7)	4" THERMOPLASTIC TRAFFIC STRIPE DETAIL 13 MOD BROKEN WHITE (36-12)	4" THERMOPLASTIC TRAFFIC STRIPE DETAIL A SOLID WHITE	4" THERMOPLASTIC TRAFFIC STRIPE DETAIL 27B SOLID WHITE	4" THERMOPLASTIC TRAFFIC STRIPE DETAIL 25A SOLID YELLOW	4" THERMOPLASTIC TRAFFIC STRIPE DETAIL 25 SOLID YELLOW	8" THERMOPLASTIC TRAFFIC STRIPE DETAIL 38B SOLID WHITE	8" THERMOPLASTIC TRAFFIC STRIPE DETAIL 38 SOLID WHITE	8" THERMOPLASTIC TRAFFIC STRIPE DETAIL 36 SOLID WHITE	8" THERMOPLASTIC TRAFFIC STRIPE DETAIL 37 BROKEN WHITE (12-3)	THERMOPLASTIC PAVEMENT MARKING			PAVEMENT MARKER				REMOVE			
															CHEVRON	ARROW	CROSS WALK & LIMIT LINE	NON-REFLECTIVE TYPE A	NON-REFLECTIVE TYPE C	RETRO-REFLECTIVE TYPE G	RETRO-REFLECTIVE TYPE H	THERMOPLASTIC TRAFFIC STRIPE (WHITE)	YELLOW THERMOPLASTIC TRAFFIC STRIPE (HAZARDOUS WASTE)	THERMOPLASTIC PAVEMENT MARKING	PAVEMENT MARKER
		LF	LF	LF	LF	LF	LF	LF	LF	LF	LF	LF	LF	LF	SQFT	SQFT	SQFT	EA	EA	EA	EA	LF	LF	SQFT	EA
PD-1	CAMINO DE ESTRALLA LINE "C"		1484	280	1279		500					1031		110		90	180	150		92	32	3090		270	274
	Rte 5 CAMINO DE ESTRALLA S/B OFF RAMP LINE "B"					1580		773.5	773.5		300					468	170					2653.5	773.5	638	
	Rte 5 "A" LINE FROM 312+12 TO 325+00					3864				1288								324		82	28	3864	1288		434
PD-2	Rte 5 "C" LINE		572		858		150						175			30	72	45		34	13	1755		72	92
PD-3	Rte 5 CAMINO DE ESTRALLA S/B OFF RAMP LINE "B"	474						318	53									42		8		636	53		50
	Rte 5 "A" LINE FROM 325+00 TO 338+00					4726		1353		1300	300		842	526	250			396	48	179	29	7747	1300		652
PD-4	Rte 5 "A" LINE FROM 338+00 TO 351+00					4800		1200		1200				1200				400	112	131	29	7200	1200		672
SUBTOTAL		474	2056	280	2137	14970	650	3644.5	826.5	3788	600	1031	1017	1836	250	588	422	1357	160	526	131	26945.5	4614	980	2174
TOTAL		474	2056	280	2137	14970	8909				2648			1836	1260			1357	817			26945.5	4614.5	980	2174

(N) - NOT A SEPARATE PAY ITEM, FOR INFORMATION ONLY

PAVEMENT DELINEATION QUANTITIES

PDQ-1

THIS PLAN ACCURATE FOR PAVEMENT DELINEATION ONLY

STATE OF CALIFORNIA - DEPARTMENT OF TRANSPORTATION
Caltrans DESIGN DIVISION

FUNCTIONAL SUPERVISOR: ADEL MALEK
CALCULATED-DESIGNED BY: RICHARD DANG
CHECKED BY: MOSTAFA ALIAKBARZADEH
REVISED BY
DATE REVISED

LAST REVISION 07-15-10 | DATE PLOTTED => 18-FEB-2011 | TIME PLOTTED => 05:44

Dist	COUNTY	ROUTE	POST MILES TOTAL PROJECT	SHEET No.	TOTAL SHEETS
12	Ora	5	5.6/6.6	56	154

Mostafa Aliakbarzadeh 09-13-10
REGISTERED CIVIL ENGINEER DATE

2-14-11
PLANS APPROVAL DATE

REGISTERED PROFESSIONAL ENGINEER
MOSTAFA ALIAKBARZADEH
No. C53003
Exp. 3-31-11
CIVIL
STATE OF CALIFORNIA

THE STATE OF CALIFORNIA OR ITS OFFICERS OR AGENTS SHALL NOT BE RESPONSIBLE FOR THE ACCURACY OR COMPLETENESS OF SCANNED COPIES OF THIS PLAN SHEET.

LEGEND:

OVERHEAD SIGN STRUCTURE

X SIGN IDENTIFICATION NUMBER

ABBREVIATIONS:

ISS INSTALL SIGN STRUCTURE
IS INSTALL ROADSIDE SIGN
PP PROTECT IN PLACE
RM REMOVE ROADSIDE SIGN (WOOD POST)
RL RELOCATE ROADSIDE SIGN

NOTE:

1. NEW ROADSIDE SIGNS SHALL REPLACE EXISTING ROADSIDE SIGN AT THE SAME LOCATIONS

NOTE:

FOR ACCURATE RIGHT OF WAY DATA, CONTACT RIGHT OF WAY ENGINEERING AT THE DISTRICT OFFICE.

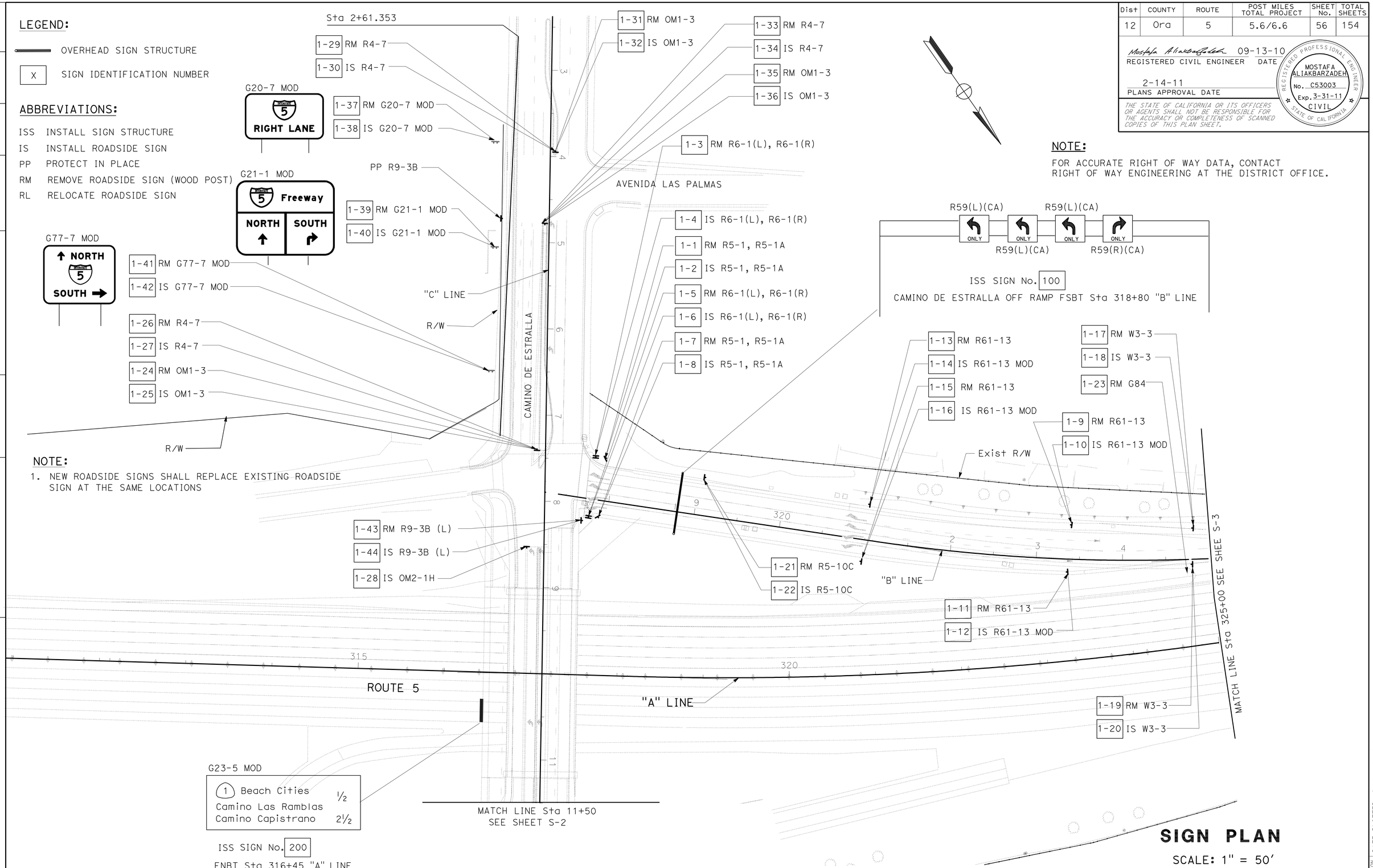

SIGN PLAN

SCALE: 1" = 50'

THIS PLAN ACCURATE FOR SIGNING WORK ONLY

S-1

REVISED BY	DATE REVISED
RICHARD DANG	MOSTAFA ALIAKBARZADEH
CALCULATED-DESIGNED BY	CHECKED BY
FUNCTIONAL SUPERVISOR	ADEL MALEK

STATE OF CALIFORNIA - DEPARTMENT OF TRANSPORTATION
Caltrans® DESIGN DIVISION

LAST REVISION 07-15-10 | DATE PLOTTED => 17-FEB-2011 | TIME PLOTTED => 08:48

Dist	COUNTY	ROUTE	POST MILES TOTAL PROJECT	SHEET No.	TOTAL SHEETS
12	Ora	5	5.6/6.6	57	154

Mostafa Aliakbarzadeh 09-13-10
REGISTERED CIVIL ENGINEER DATE

2-14-11
PLANS APPROVAL DATE

REGISTERED PROFESSIONAL ENGINEER
MOSTAFA ALIAKBARZADEH
No. C53003
Exp. 3-31-11
CIVIL
STATE OF CALIFORNIA

THE STATE OF CALIFORNIA OR ITS OFFICERS OR AGENTS SHALL NOT BE RESPONSIBLE FOR THE ACCURACY OR COMPLETENESS OF SCANNED COPIES OF THIS PLAN SHEET.

NOTE:

FOR ACCURATE RIGHT OF WAY DATA, CONTACT
RIGHT OF WAY ENGINEERING AT THE DISTRICT OFFICE.

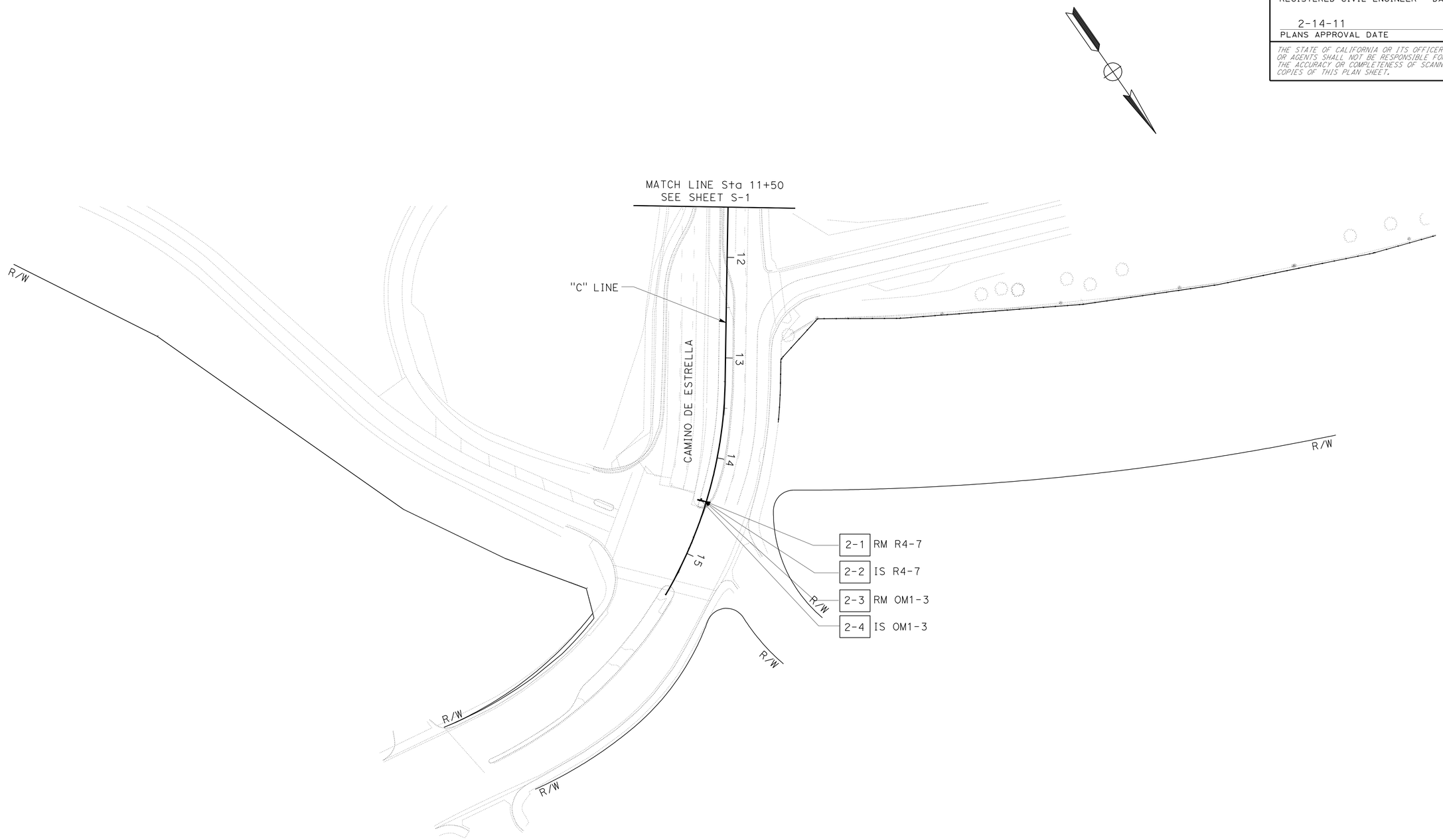

SIGN PLAN

SCALE: 1" = 50'

S-2

THIS PLAN ACCURATE FOR SIGNING WORK ONLY

STATE OF CALIFORNIA - DEPARTMENT OF TRANSPORTATION
Caltrans® DESIGN DIVISION

FUNCTIONAL SUPERVISOR: ADEL MALEK
CALCULATED-DESIGNED BY: RICHARD DANG
CHECKED BY: MOSTAFA ALIAKBARZADEH
REVISED BY
DATE REVISED

LAST REVISION 07-15-10
DATE PLOTTED => 17-FEB-2011
TIME PLOTTED => 08:49

Dist	COUNTY	ROUTE	POST MILES TOTAL PROJECT	SHEET No.	TOTAL SHEETS
12	Ora	5	5.6/6.6	58	154

Mostafa Aliakbarzadeh 09-13-10
REGISTERED CIVIL ENGINEER DATE

2-14-11
PLANS APPROVAL DATE

REGISTERED PROFESSIONAL ENGINEER
MOSTAFA ALIAKBARZADEH
No. C53003
Exp. 3-31-11
CIVIL
STATE OF CALIFORNIA

THE STATE OF CALIFORNIA OR ITS OFFICERS OR AGENTS SHALL NOT BE RESPONSIBLE FOR THE ACCURACY OR COMPLETENESS OF SCANNED COPIES OF THIS PLAN SHEET.

NOTE:

FOR ACCURATE RIGHT OF WAY DATA, CONTACT
RIGHT OF WAY ENGINEERING AT THE DISTRICT OFFICE.

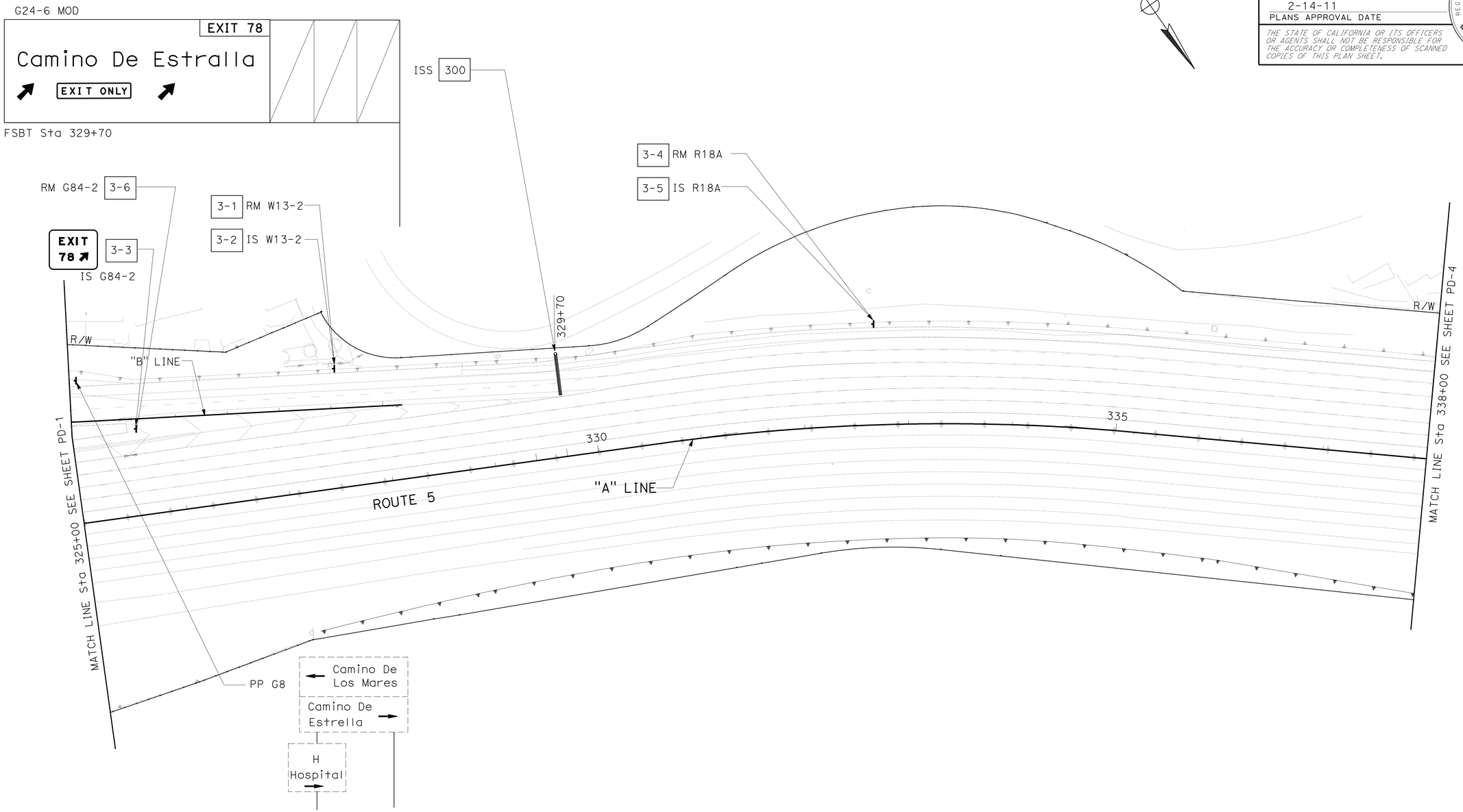

SIGN PLAN

SCALE: 1" = 50'

THIS PLAN ACCURATE FOR SIGNING WORK ONLY

S-3

STATE OF CALIFORNIA - DEPARTMENT OF TRANSPORTATION
Caltrans
DESIGN DIVISION

FUNCTIONAL SUPERVISOR: ADEL MALEK
CALCULATED-DESIGNED BY: RICHARD DANG
CHECKED BY: MOSTAFA ALIAKBARZADEH
REVISED BY
DATE REVISED

LAST REVISION 07-15-10
DATE PLOTTED => 17-FEB-2011
TIME PLOTTED => 08:49

Dist	COUNTY	ROUTE	POST MILES TOTAL PROJECT	SHEET No.	TOTAL SHEETS
12	Ora	5	5.6/6.6	59	154

Mostafa Aliakbarzadeh 09-13-10
REGISTERED CIVIL ENGINEER DATE

2-14-11
PLANS APPROVAL DATE

REGISTERED PROFESSIONAL ENGINEER
MOSTAFA ALIAKBARZADEH
No. C53003
Exp. 3-31-11
CIVIL
STATE OF CALIFORNIA

THE STATE OF CALIFORNIA OR ITS OFFICERS OR AGENTS SHALL NOT BE RESPONSIBLE FOR THE ACCURACY OR COMPLETENESS OF SCANNED COPIES OF THIS PLAN SHEET.

NOTE:

FOR ACCURATE RIGHT OF WAY DATA, CONTACT
RIGHT OF WAY ENGINEERING AT THE DISTRICT OFFICE.

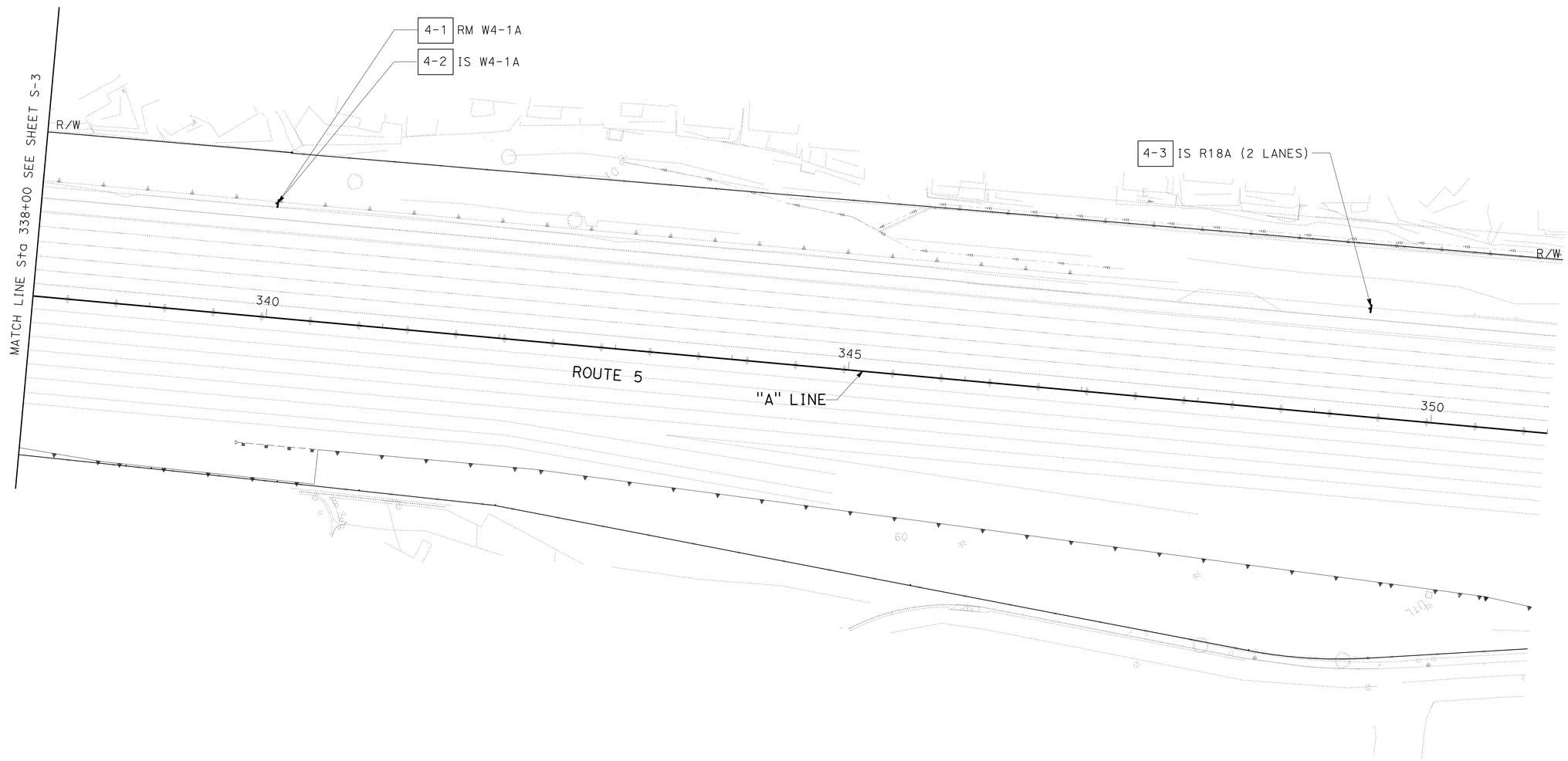

SIGN PLAN

SCALE: 1" = 50'

THIS PLAN ACCURATE FOR SIGNING WORK ONLY

S-4

STATE OF CALIFORNIA - DEPARTMENT OF TRANSPORTATION
Caltrans
DESIGN DIVISION

FUNCTIONAL SUPERVISOR: ADEL MALEK
CALCULATED-DESIGNED BY: RICHARD DANG
CHECKED BY: MOSTAFA ALIAKBARZADEH
REVISED BY
DATE REVISED

LAST REVISION 07-15-10
DATE PLOTTED => 17-FEB-2011
TIME PLOTTED => 08:49

Dist	COUNTY	ROUTE	POST MILES TOTAL PROJECT	SHEET No.	TOTAL SHEETS
12	Ora	5	5.6/6.6	60	154

Mostafa Aliakbarzadeh 09-13-10
REGISTERED CIVIL ENGINEER DATE

2-14-11
PLANS APPROVAL DATE

REGISTERED PROFESSIONAL ENGINEER MOSTAFA ALIAKBARZADEH No. C53003 Exp. 3-31-11 CIVIL STATE OF CALIFORNIA

THE STATE OF CALIFORNIA OR ITS OFFICERS OR AGENTS SHALL NOT BE RESPONSIBLE FOR THE ACCURACY OR COMPLETENESS OF SCANNED COPIES OF THIS PLAN SHEET.

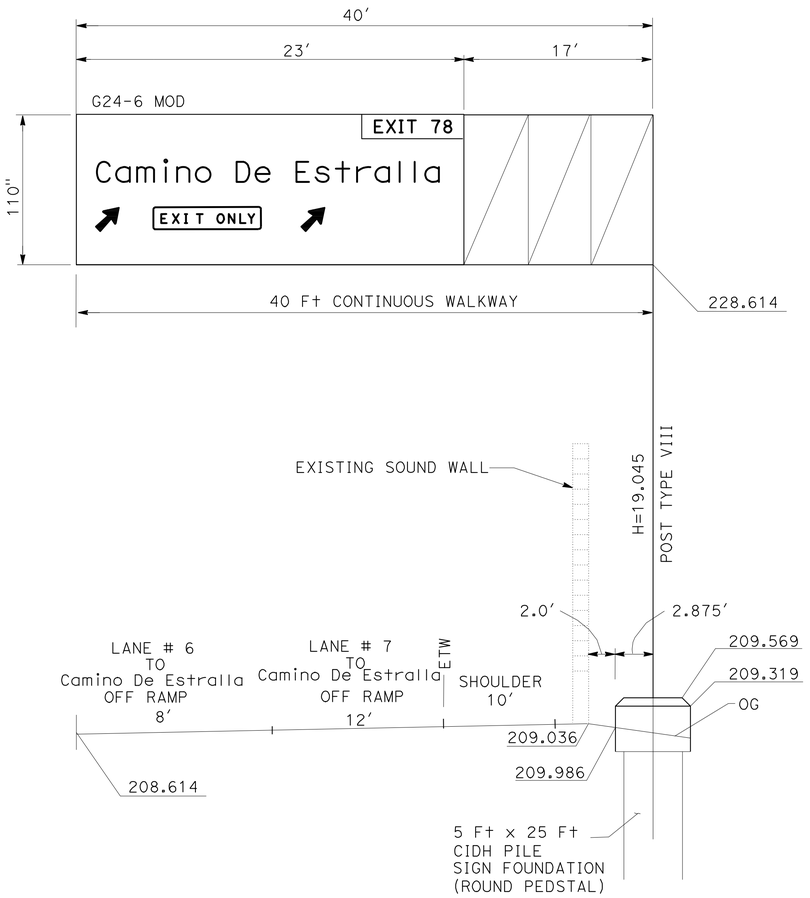

SIGN No. 300
FSBT Sta 329+70 "A" LINE

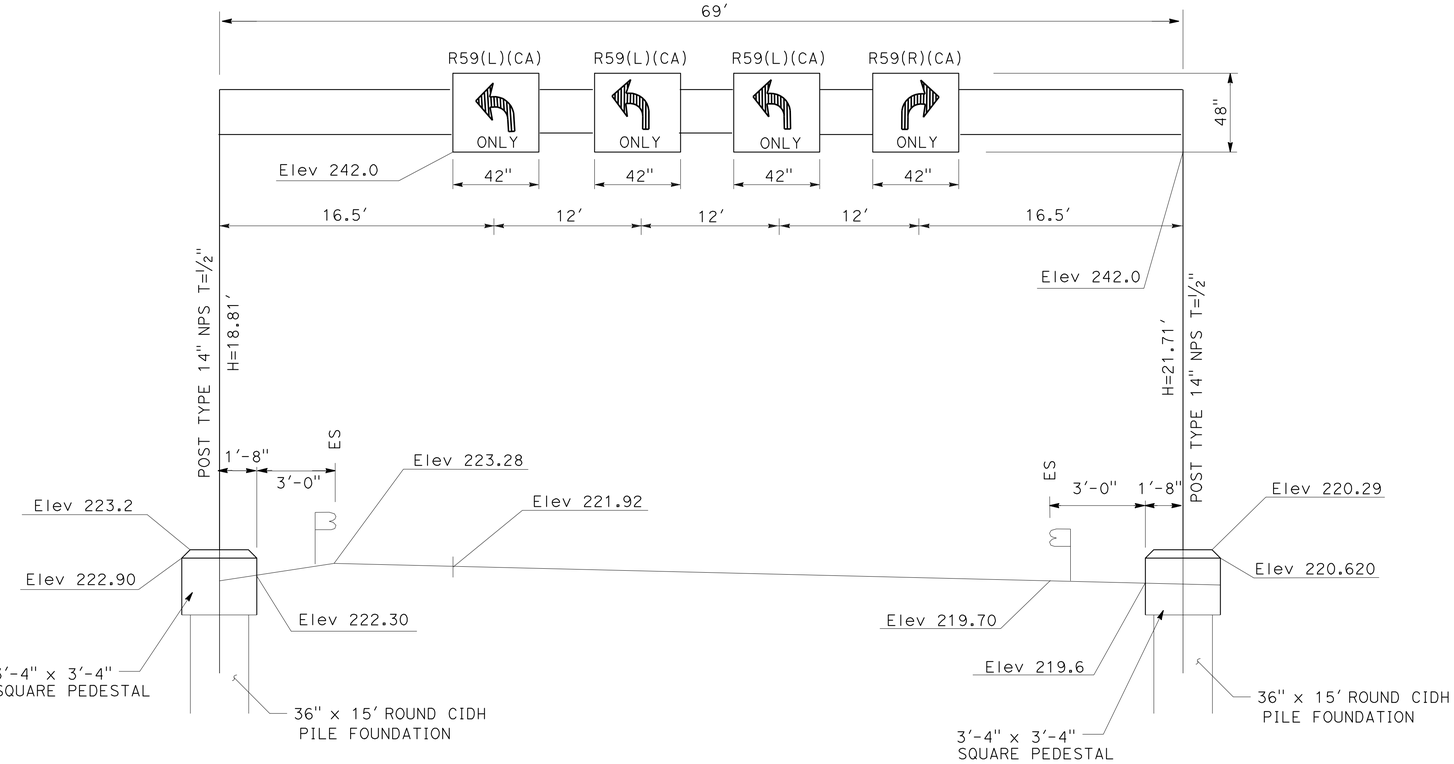

SIGN No. 100
CAMINO DE ESTRALLA OFF RAMP Sta 318+80 "B" LINE

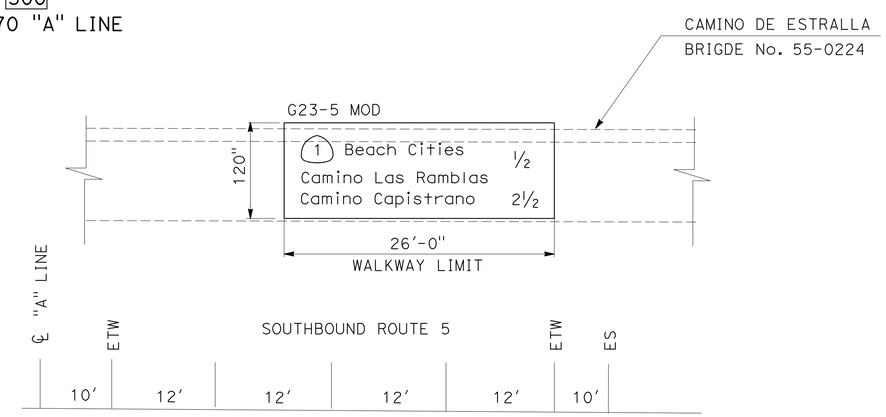

ISS SIGN No. 200
FNBT Sta 316+45 "A" LINE
(BRIGDE MOUNTED, BRIDGE No. 55-0224)

THIS PLAN ACCURATE FOR SIGNING WORK ONLY

SIGN DETAILS

NO SCALE

SD-1

STATE OF CALIFORNIA - DEPARTMENT OF TRANSPORTATION
Caltrans® DESIGN DIVISION

FUNCTIONAL SUPERVISOR: ADEL MALEK
CALCULATED-DESIGNED BY: RICHARD DANG
CHECKED BY: MOSTAFA ALIAKBARZADEH
REVISED BY
DATE REVISED

LAST REVISION 07-15-10
DATE PLOTTED => 17-FEB-2011
TIME PLOTTED => 08:49

Dist	COUNTY	ROUTE	POST MILES TOTAL PROJECT	SHEET No.	TOTAL SHEETS
12	Ora	5	5.6/6.6	61	154

Mostafa Aliakbarzadeh 09-13-10
REGISTERED CIVIL ENGINEER DATE

2-14-11
PLANS APPROVAL DATE

REGISTERED PROFESSIONAL ENGINEER
MOSTAFA ALIAKBARZADEH
No. C53003
Exp. 3-31-11
CIVIL
STATE OF CALIFORNIA

THE STATE OF CALIFORNIA OR ITS OFFICERS OR AGENTS SHALL NOT BE RESPONSIBLE FOR THE ACCURACY OR COMPLETENESS OF SCANNED COPIES OF THIS PLAN SHEET.

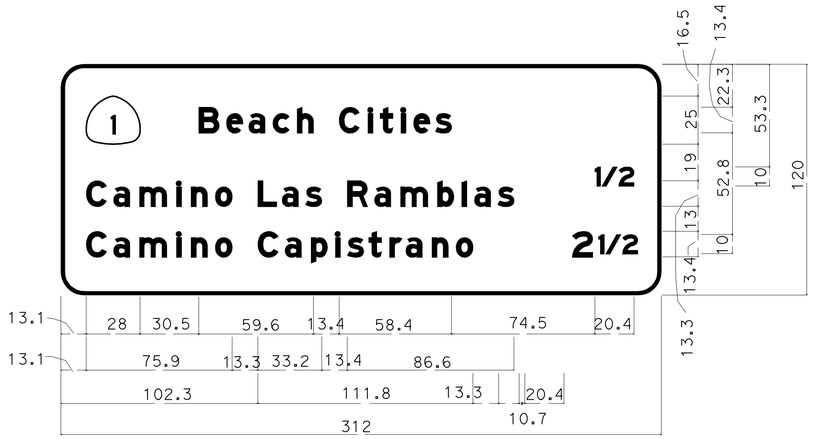

12.0" Radius, 2.0" Border, White on Green;
[Beach Cities] E Mod; [Camino Las Ramblas] E Mod; [Camino Capistrano 21/2] E Mod; [1/2] E Mod;

200 G23-5 MOD

W61C

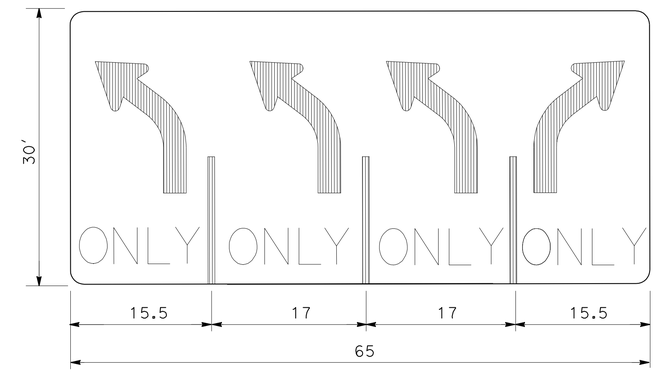

1-14 AND 1-16 R61-13 MOD

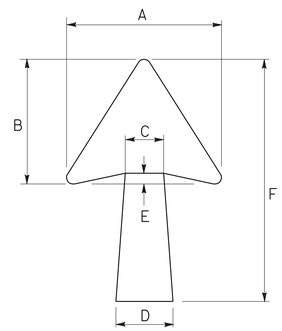

DIAGONAL ARROW

ARROW DETAIL

A	B	C	D	E	F
22 1/4	17	5 3/8	7 1/8	1 3/4	25

12.0" Radius, 2.0" Border, White on Green;
[Camino De Estrella] E Mod; Arrow 13.33UC-1L - 20.3" 45{;
Arrow 13.33UC-1L - 20.3" 45{;

300 G24-6 MOD

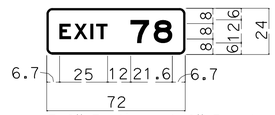

3.0" Radius, 1.0" Border, White on Green;
[EXIT] E; [78] E;

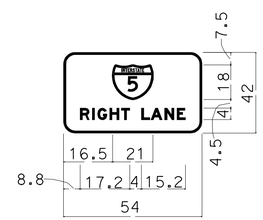

6.0" Radius, 1.3" Border, White on Green;
[RIGHT LANE] E Mod;

1-38 G20-7 MOD

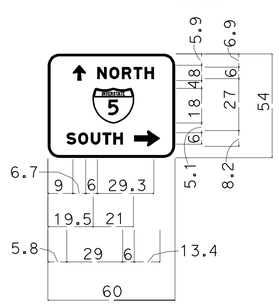

6.0" Radius, 1.3" Border, White on Green;
Arrow Custom - 8.0" 90{; [NORTH] E Mod; [SOUTH] E Mod;
Standard Arrow Custom 13.4" X 8.1" 0{;

1-42 G77-7 MOD

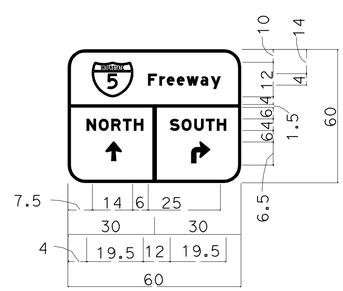

9.0" Radius, 1.5" Border, White on Green;
[Freeway] E Mod; [NORTH] E Mod; [SOUTH] E Mod; Arrow Custom - 6.4" 90{;
90 Deg Advanced Turn Arrow 9.8" X 11.3";

1-40 G21-1 MOD

SIGN DETAILS

NO SCALE

SD-2

STATE OF CALIFORNIA - DEPARTMENT OF TRANSPORTATION
Caltrans® DESIGN DIVISION

FUNCTIONAL SUPERVISOR: ADEL MALEK
CALCULATED-DESIGNED BY: RICHARD DANG
CHECKED BY: MOSTAFA ALIAKBARZADEH
REVISED BY / DATE REVISED

LAST REVISION DATE PLOTTED => 17-FEB-2011
07-15-10 TIME PLOTTED => 08:49

Dist	COUNTY	ROUTE	POST MILES TOTAL PROJECT	SHEET No.	TOTAL SHEETS
12	Ora	5	5.6/6.6	62	154

Mostafa Aliakbarzadeh 09-13-10
REGISTERED CIVIL ENGINEER DATE

2-14-11
PLANS APPROVAL DATE

REGISTERED PROFESSIONAL ENGINEER
MOSTAFA ALIAKBARZADEH
No. C53003
Exp. 3-31-11
CIVIL
STATE OF CALIFORNIA

THE STATE OF CALIFORNIA OR ITS OFFICERS OR AGENTS SHALL NOT BE RESPONSIBLE FOR THE ACCURACY OR COMPLETENESS OF SCANNED COPIES OF THIS PLAN SHEET.

ROADSIDE SIGNS QUANTITIES

SHEET No.	SIGN No.	SIGN CODE	PANEL SIZE	POST SIZE & LENGTH	REMOVE ROADSIDE SIGN	ROADSIDE SIGN (ONE POST)	ROADSIDE SIGN (TWO POST)	INSTALL SIGN (STRAP & SADDLE BRACKET METHOD)
				6" x 6"				
			IN x IN	F+	EA	EA	EA	EA
S-1	1-1	R5-1	EXISTING		1			
		R5-1A	EXISTING					
	1-2	R5-1	48" x 48"	13		1		
		R5-1A	42" x 30"					
	1-3	R6-1(L)	EXISTING		1			
		R6-1(R)	EXISTING					
	1-4	R6-1(L)	36" x 12"	6		1		
		R6-1(R)	36" x 12"					
	1-5	R6-1(L)	EXISTING		1			
		R6-1(R)	EXISTING					
	1-6	R6-1(L)	36" x 12"	6		1		
		R6-1(R)	36" x 12"					
	1-7	R5-1	EXISTING		1			
		R5-1A	EXISTING					
	1-8	R5-1	48" x 48"	13		1		
		R5-1A	42" x 30"					
	1-9	R61-13	EXISTING		1			
	1-10	R61-13 MOD	65" x 30"	15.5		1		
	1-11	R61-13	EXISTING		1			
	1-12	R61-13 MOD	65" x 30"	15.5		1		
	1-13	R61-13	EXISTING		1			
	1-14	R61-13 MOD	65" x 30"	15.5		1		
	1-15	R61-13	EXISTING		1			
	1-16	R61-13 MOD	65" x 30"	15.5		1		
	1-17	W3-3	EXISTING		1			
	1-18	W3-3	48" x 48"	12.5		1		
	1-19	W3-3	EXISTING		1			
	1-20	W3-3	48" x 48"	12.5		1		
	1-21	R5-10C	EXISTING		1			
	1-22	R5-10C	12" x 24"	11		1		
	1-23	G84	EXISTING		1			
	1-24	OM1-3	EXISTING		1			
	1-25	OM1-3	18" x 18"	8		1		
	1-26	R4-7	EXISTING		1			
	1-27	R4-7	18" x 24"	12.5		1		
	1-28	OM2-1H	18" x 18"	8		1		
	1-29	R4-7	EXISTING		1			
	1-30	R4-7	18" x 24"	12.5		1		
	1-31	OM1-3	EXISTING		1			
	1-32	OM1-3	18" x 18"	8		1		
		SUBTOTAL			16	16		

ROADSIDE SIGNS QUANTITIES

SHEET No.	SIGN No.	SIGN CODE	PANEL SIZE	POST SIZE & LENGTH	REMOVE ROADSIDE SIGN	ROADSIDE SIGN (ONE POST)	ROADSIDE SIGN (TWO POST)	INSTALL SIGN (STRAP & SADDLE BACKET METHOD)
				6" x 6"				
			IN x IN	LF	EA	EA	EA	EA
S-1	1-33	R4-7	EXISTING		1			
	1-34	R4-7	18" x 24"	12.5		1		
	1-35	OM1-3	EXISTING		1			
	1-36	OM1-3	18" x 18"	8		1		
	1-37	G20-7 MOD						
	1-38	G20-7 MOD	72" x 42"	15			1	
	1-39	G21-1 MOD			1			
	1-40	G21-1 MOD	90" x 72"	15			1	
	1-41	G77-7 MOD			1			
	1-42	G77-7 MOD	66" x 54"	15			1	
	1-43	R9-3B (L)			1			
	1-44	R9-3B (L)	24" x 12"					1
S-2	2-1	R4-7	EXISTING		1			
	2-2	R4-7	18" x 24"	12.5		1		
	2-3	OM1-3	EXISTING		1			
	2-4	OM1-3	18" x 18"	8		1		
S-3	3-1	W13-2	EXISTING		1			
	3-2	W13-2	36" x 48"	15		1		
	3-3	G84-2	48" x 54"			1		
	3-4	R18A	EXISTING		1			
	3-5	R18A	48" x 66"	16		1		
	3-6	G84-2	EXISTING		1			
S-4	4-1	W4-1A	EXISTING		1			
	4-1	W4-1A	48" x 48"			1		
	4-3	R18A (2 LANES)	48" x 66"			1		
		SUBTOTAL			11	9		
		TOTAL			27	25	3	1

SIGN QUANTITIES

SQ-1

THIS PLAN ACCURATE FOR PAVEMENT DELINEATION ONLY

STATE OF CALIFORNIA - DEPARTMENT OF TRANSPORTATION
Caltrans® DESIGN DIVISION

FUNCTIONAL SUPERVISOR: ADEL MALEK
CALCULATED-DESIGNED BY: RICHARD DANG
CHECKED BY: MOSTAFA ALIAKBARZADEH
REVISED BY
DATE REVISED

LAST REVISION 07-15-10
DATE PLOTTED => 18-FEB-2011
TIME PLOTTED => 05:44

Dist	COUNTY	ROUTE	POST MILES TOTAL PROJECT	SHEET No.	TOTAL SHEETS
12	Ora	5	5.6/6.6	63	154

REGISTERED CIVIL ENGINEER 09-13-10 DATE

2-14-11
PLANS APPROVAL DATE

REGISTERED PROFESSIONAL ENGINEER MOSTAFA ALIAKBARZADEH No. C53003 Exp. 3-31-11 CIVIL STATE OF CALIFORNIA

THE STATE OF CALIFORNIA OR ITS OFFICERS OR AGENTS SHALL NOT BE RESPONSIBLE FOR THE ACCURACY OR COMPLETENESS OF SCANNED COPIES OF THIS PLAN SHEET.

OVERHEAD SIGN QUANTITIES

SHEET No.	SIGN No.	LOCATION	FURNISH SIGN STRUCTURE (TRUSS)	FURNISH SIGN STRUCTURE (LIGHTWEIGHT)	INSTALL SIGN STRUCTURE (TRUSS)	INSTALL SIGN STRUCTURE (LIGHTWEIGHT)	60 INCHES CIDH CONCRETE PILE (SIGN FOUNDATION)	36 INCHES CIDH CONCRETE PILE (SIGN FOUNDATION)	REMOVE SIGN STRUCTURE
			LB	LB	LB	LB	LF	LF	EA
S-1	100	Sta 318+20 "B" LINE		8545		8545		30	1
S-3	300	FSBT @ Sta 329+70 "A" LINE	23024		23024		25		1
S-1	200	FNBT @ Sta 316+45 "A" LINE	3885.35		3885.35				1
TOTAL			26909.35	8545	26909.35	8545	25	30	3

MATERIAL SUMMARY (CONTRACTOR FURNISHED OVERHEAD SIGNS)

SHEET No.	SIGN No.	SIGN CODE	PANEL SIZE (inch x inch)	SIGN AREA (SQFT)	SINGLE FACED	PROTECTIVE OVERLAY	BACKGROUND		LEGEND		GRAFFITI FILM	OVERHEAD SIGN FURNISH LAMINATED PANEL SIGN (1" - TYPE A)
							SHEETING COLOR	RETROREFLECTIVE ASTM TYPE	SHEETING COLOR	RETROREFLECTIVE ASTM TYPE	STANDARD	SQFT
S-1	100	R59 (L) (CA)	48" x 42"	14	x	N/A	W	VIII	B	VIII	x	14
		R59 (L) (CA)	48" x 42"	14	x	N/A	W	VIII	B	VIII	x	14
		R59 (R) (CA)	48" x 42"	14	x	N/A	W	VIII	B	VIII	x	14
		R59 (R) (CA)	48" x 42"	14	x	N/A	W	VIII	B	VIII	x	14
S-1	200	G23-5 MOD	120" x 312"	260	x	N/A	G	VIII	W	VIII	x	141.66
S-3	300	G24-6 MOD	110" x 480"	366.67	x	N/A	G	VIII	W	VIII	x	150
										TOTAL		347.66

ABBREVIATION:

B = BLACK
G = GREEN
W = WHITE

SIGN QUANTITIES

SQ-2

REVISED BY | DATE REVISED
RICHARD DANG | MOSTAFA ALIAKBARZADEH
CALCULATED-DESIGNED BY | CHECKED BY
FUNCTIONAL SUPERVISOR | ADEL MALEK
STATE OF CALIFORNIA - DEPARTMENT OF TRANSPORTATION
Caltrans® DESIGN DIVISION

LAST REVISION 07-15-10 | DATE PLOTTED => 17-FEB-2011 TIME PLOTTED => 08:49

Dist	COUNTY	ROUTE	POST MILES TOTAL PROJECT	SHEET No.	TOTAL SHEETS
12	Ora	5	5.6/6.6	64	154

Mostafa Aliakbarzadeh 09-13-10
REGISTERED CIVIL ENGINEER DATE

2-14-11
PLANS APPROVAL DATE

REGISTERED PROFESSIONAL ENGINEER MOSTAFA ALIAKBARZADEH No. C53003 Exp. 3-31-11 CIVIL STATE OF CALIFORNIA

THE STATE OF CALIFORNIA OR ITS OFFICERS OR AGENTS SHALL NOT BE RESPONSIBLE FOR THE ACCURACY OR COMPLETENESS OF SCANNED COPIES OF THIS PLAN SHEET.

MATERIAL SUMMARY (CONTRACTOR FURNISHED SIGNS)

SHEET No.	SIGN No.	SIGN CODE	PANEL SIZE	SIGN AREA (SQFT)	SINGLE FACED	PROTECTIVE OVERLAY	BACKGROUND SHEETING COLOR	BACKGROUND RETROREFLECTIVE ASTM TYPE	LEGEND SHEETING COLOR	LEGEND RETROREFLECTIVE ASTM TYPE	FURNISH SINGLE-SHEET ALUMINUM SIGN (0.063" UNFRAMED) SQFT	FURNISH SINGLE-SHEET ALUMINUM SIGN (0.080" FRAMED) SQFT
S-1	1-2	R5-1	48" x 48"	16	x	N/A	Y	VII	B	VII	16	
		R5-1A	42" x 30"	8.75	x	N/A	Y	VII	B	VII	8.75	
	1-4	R6-1(L)	36" x 12"	3	x	N/A	Y	VII	B	VII	3	
		R6-1(R)	36" x 12"	3	x	N/A	Y	VII	B	VII	3	
	1-6	R6-1(L)	36" x 12"	3	x	N/A	G	VII	W	VII	3	
		R6-1(R)	36" x 12"	3	x	N/A	G	VII	W	VII	3	
	1-8	R5-1	48" x 48"	16	x	N/A	Y	VII	B	VII	16	
		R5-1A	42" x 30"	8.75	x	N/A	Y	VII	B	VII	8.75	
	1-10	R61-13 MOD	65" x 30"	13.54	x	N/A	Y	VII	B	VII		13.54
	1-12	R61-13 MOD	65" x 30"	13.54	x	N/A	G	VII	W	VII		13.54
	1-14	R61-13 MOD	65" x 30"	13.54	x	N/A	Y	VII	B	VII		13.54
	1-16	R61-13 MOD	65" x 30"	13.54	x	N/A	G	VII	W	VII		13.54
	1-18	W3-3	48" x 48"	16	x	N/A	Y	VII	B	VII	16	
	1-20	W3-3	48" x 48"	16	x	N/A	Y	VII	B	VII	16	
	1-22	R5-10C	12" x 24"	2	x	N/A	Y	VII	B	VII	2	
	1-25	OM1-3	18" x 18"	2.25	x	N/A	Y	VII	NONE	VII	2.25	
	1-27	R4-7	18" x 24"	3	x	N/A	W	VII	B	VII	3	
	1-28	OM2-1H	18" x 18"	2.25	x	N/A	W/Y	VII	NONE	VII	2.25	
	1-30	R4-7	18" x 24"	3	x	N/A	W	VII	B	VII	3	
	1-32	OM1-3	18" x 18"	2.25	x	N/A	Y	VII	NONE	VII	2.25	
	1-34	R4-7	18" x 24"	3	x	N/A	W	VII	B	VII	3	
	1-36	OM1-3	18" x 18"	2.25	x	N/A	Y	VII	NONE	VII	2.25	
	1-38	G20-7 MOD	54" x 42"	15.75	x	N/A	G	VII	W	VII		15.75
	1-40	G21-1 MOD	60" x 60"	25	x	N/A	G	VII	W	VII		25
	1-42	G77-7 MOD	60" x 54"	22.5	x	N/A	G	VII	W	VII		22.5
	1-44	R9-3B(L)	24" x 12"	2	x	N/A	W	VII	B	VII	2	
S-2	2-2	R4-7	18" x 24"	3	x	N/A	W	VII	B	VII	3	
	2-4	OM1-3	18" x 18"	2.25	x	N/A	Y	VII	NONE	VII	2.25	
S-3	3-2	W13-2	36" x 48"	12	x	N/A	Y	VII	B	VII	12	
	3-3	G84-2	48" x 54"	5.33	x	N/A	G	VII	W	VII	5.33	
	3-5	R18A	48" x 66"	22	x	N/A	W	VII	B	VII	22	
S-4	4-2	W4-1A	48" x 48"	16	x	N/A	Y	VII	B	VII	16	
		R18A (2 LANES)	48" x 66"	22	x	N/A	Y	VII	B	VII	22	
										TOTAL	198.08	117.41

ABBREVIATION:

Y = YELLOW
B = BLACK
G = GREEN
W = WHITE
Non = NON-REFLECTIVE
N/A = NOT APPLICABLE

SIGN QUANTITIES

SQ-3

REVISED BY | DATE REVISED
RICHARD DANG | MOSTAFA ALIAKBARZADEH
CALCULATED-DESIGNED BY | CHECKED BY
FUNCTIONAL SUPERVISOR: ADEL MALEK
STATE OF CALIFORNIA - DEPARTMENT OF TRANSPORTATION
Caltrans DESIGN DIVISION

LAST REVISION 07-15-10 | DATE PLOTTED => 18-FEB-2011 | TIME PLOTTED => 05:44

Dist	COUNTY	LOCATION CODE	POST MILES TOTAL PROJECT	SHEET No.	TOTAL SHEETS
12	Ora	5	5.6/6.6	65	154

REGISTERED CIVIL ENGINEER DATE 09-13-10

2-14-11
PLANS APPROVAL DATE

REGISTERED PROFESSIONAL ENGINEER JOSEPH LEE No. C59058 Exp. 6/30/11 CIVIL STATE OF CALIFORNIA

THE STATE OF CALIFORNIA OR ITS OFFICERS OR AGENTS SHALL NOT BE RESPONSIBLE FOR THE ACCURACY OR COMPLETENESS OF SCANNED COPIES OF THIS PLAN SHEET.

ROADWAY QUANTITIES

SHEET No.	LOCATION	STATION LIMITS	REMOVE CONCRETE (Misc) CURB	REMOVE CONCRETE (Misc) CONCRETE SIDEWALK	REMOVE CONCRETE (Misc) MEDIAN ISLAND	CHAIN LINK FENCE	REMOVE CHAIN LINK FENCE	REMOVE CONCRETE BARRIER	CONCRETE BARRIER (TYPE 60GE)	ROADWAY EXCAVATION	(N) EMBANKMENT	MINOR CONCRETE (CURB, SIDEWALK AND CURB RAMP) CURB	MINOR CONCRETE (CURB, SIDEWALK AND CURB RAMP) SIDEWALK	MINOR CONCRETE (CURB, SIDEWALK AND CURB RAMP) CURB RAMP	(N) CURB RAMP DETECTABLE WARNING SURFACE	MINOR CONCRETE (TEXTURED PAVING)	HOT MIX ASPHALT (TYPE A)	CLASS 2 AGGREGATE BASE	CONCRETE PAVEMENT (RAPID STRENGTH CONCRETE)	CLASS 3 AGGREGATE SUBBASE	TACK COAT	SEAL PAVEMENT JOINT	COLD PLANE ASPHALT CONCRETE (0.10' MAXIMUM)	ADJUST MANHOLE TO GRADE	METAL BEAM GUARD RAILING (WOOD POST)	ALTERNATIVE IN-LINE TERMINAL SYSTEM	DOWEL BARS (DRILL AND BOND)	TIE BARS
			CY	CY	CY	LF	LF	LF		CY	CY	CY	CY	CY	SQFT	SQFT	TON	CY	CY	CY	TON	LF	SQFT	EA	LF	EA	EA	EA
L-1	"C" LINE R†	2+38.642 TO 11+50.000	45	81		87	80			987	268	44	48	4	48		354	676			0.3			2				
	"C" LINE CENTER	4+88.918 TO 11+50.000	20		15							24				2500												
	"C" LINE L†	7+97.430 TO 8+36.664	3	6								2	2	1	12													
	"A" LINE CENTER	316+12.000 TO 317+82.000						170	170																			
	"A" LINE L† & R†	316+45.000 TO 317+73.000									20																	
	"B" LINE	317+61.033 TO 325+00.000								3254	325					5700	1371	1016	308	1238	1.0	1750	16503		76	2	790	250
L-2	"C" LINE R†	11+50.000 TO 14+43.719	18	55		163	200			484	13	18	24				135	259			0.2							
	"C" LINE CENTER	11+50.000 TO 14+52.143	15		63							11				2560												
L-3	"B" LINE	325+000 TO 328+18.520								720							320	489			0.5							
	"A" LINE L†	328+18.520 TO 338+00.000								2950							1260	2432			2.0							
L-4	"A" LINE L†	338+00.000 TO 350+00.000								3390	132						1445	2775			2.0							
		SUBTOTAL	101	143	78		280	170	170	11785	758	99	74	5	60	10700	4885	7647	308	1238	6	1750	16503	2	76	2	790	250
		TOTAL	322			250	280	170	170	11785	758	178			60	10700	4885	7647	308	1238	6	1750	16503	2	76	2	790	250

(N) - NOT A SEPARATE PAY ITEM, FOR INFORMATION ONLY.

SUMMARY OF QUANTITIES

Q-1

REVISED BY	03-18-10
DATE REVISED	03-18-10
JOSEPH LEE	
QUAN TRINH	
CALCULATED-DESIGNED BY	
CHECKED BY	
FUNCTIONAL SUPERVISOR	MILI LIM STAMATION

STATE OF CALIFORNIA - DEPARTMENT OF TRANSPORTATION

Caltrans DESIGN

LAST REVISION 05-05-10 | DATE PLOTTED => 18-FEB-2011 TIME PLOTTED => 05:45

Dist	COUNTY	ROUTE	POST MILES TOTAL PROJECT	SHEET No.	TOTAL SHEETS
12	Ora	5	5.6/6.6	66	154

Ronald Wong 09-13-10
LICENSED LANDSCAPE ARCHITECT

2-14-11
PLANS APPROVAL DATE

LICENSED LANDSCAPE ARCHITECT — RONALD WONG 1595 — Expiration Date 01-31-12 — Renewal Date 09-13-10 — Date — STATE OF CALIFORNIA

THE STATE OF CALIFORNIA OR ITS OFFICERS OR AGENTS SHALL NOT BE RESPONSIBLE FOR THE ACCURACY OR COMPLETENESS OF ELECTRONIC COPIES OF THIS PLAN SHEET.

ABBREVIATIONS:

AMEND — amendment
B & B — balled and burlapped
Dia — diameter
EA — each
lb — pound
oz. — ounce
Ft — foot/feet
SQFT — square feet
CF — cubic feet
Max — maximum
Min — minimum
NCN — no common name
No. — number
Pkt — packet
PLT ESTB — plant establishment
Pvmt — pavement
R/W — right of way
SF — state furnished
TRVD — traveled

PLANT LIST AND PLANTING SPECIFICATIONS

PLANT GROUP	PLANT No.	SYMBOL	BOTANICAL NAME	COMMON NAME	SIZE	QUANTITY EACH	HOLE SIZE (INCH) Dia	HOLE SIZE (INCH) DEPTH	BASIN TYPE	IRON SULFATE ①	SOIL AMEND ①	COMMERCIAL FERTILIZER ① PLANTING	COMMERCIAL FERTILIZER ① PLT ESTB	BASIN MULCH	STAKING	PLANTING LIMITS MINIMUM DISTANCE (Ft) FROM TRVD WAY	PVMT	FENCE	WALL	PAVED DITCH	EARTH DITCH	ON CENTER (Ft)	REMARKS
A	1		DIETES BICOLOR	FORTNIGHT LILY	No. 1	130	12	12	II	-	0.15 CF	0.13 LB	0.13 LB	0.70 CF	-	-	6	6	6	6	8	2.5	SHRUB ⑧
	2		HEMEROCALLIS HYBRIDS	DAYLILY	No. 1	140	12	12	II	-	0.15 CF	0.13 LB	0.13 LB	0.70 CF	-	-	6	6	6	4	4	2.0	SHRUB
B	3		PLUMBAGO AURICULATA	CAPE PLUMBAGO	No. 5	14	18	12	II	-	0.25 CF	0.25 LB	0.25 LB	0.70 CF	-	-	10	15	15	15	15	④	SHRUB
	4		RHAPHIOLEPIS INDICA	INDIAN HAWTHORN	No. 5	27	18	12	II	-	0.25 CF	0.25 LB	0.25 LB	0.70 CF	-	-	10	6	6	9	10	④	SHRUB
F	5		PELARGONIUM PELTATUM	IVY GERANIUM	IN FLATS	12,550	6	6		-	0.05 CF	5 LB PER 100 SQFT	5 LB PER 100 SQFT	④	-	4	2	-	-	-	-	1.0	GROUND COVER
H	6		CARPOBROTUS EDULIS	HOTTENTOT FIG	CUTTINGS	12530	-	-		-	-	5 LB PER 100 SQFT	5 LB PER 100 SQFT	④	-	6	4	4	4	4	4	1.5	GROUND COVER
P	7		ZOYSIA TENUIFOLIA	ZOYSIA	2"X2"	1125	②	②	-	-	0.05 CF	5 LB PER 100 SQFT	5 LB PER 100 SQFT	④	-	2	-	-	-	-	-	1.0	GROUND COVER PLANT PLUGS 6" O.C. FOR THE FIRST 24" STRIP FROM RAMP
U	8		CERCIS OCCIDENTALIS	WESTERN REDBUD	No. 15	3	24	18	II⑨	-	0.5 CF	0.75 LB	0.50 LB	2.00 CF	⑥	30	-	15	15	15	15	④	TREE
	9		PINUS CANARIENSIS	CANARY ISLAND PINE	No. 15	6	24	18	II⑨	-	0.5 CF	0.75 LB	0.50 LB	2.00 CF	⑥	40	-	20	20	10	12	④	TREE
	10		PHOENIX ROEBELENII	PYGMY DATE PALM	No. 15	12	24	18	II⑨	-	0.5 CF	0.75 LB	0.50 LB	2.00 CF	⑥	=	10	6	6	9	10	④	SHRUB

APPLICABLE WHEN CIRCLED:

① - Quantities shown are "per plant" unless shown as SQFT or SQYD application rates.
② - Sufficient to receive root ball.
3 - Does not apply to mulch areas.
④ - As shown on plans.
5 - Unless otherwise shown on plans.
⑥ - See detail.
7 - See Special Provisions.
⑧ - Double rows, triangular spaced.
⑨ - Basin area equivalent to 36" diameter.

LEGEND:

MINOR CONCRETE TEXTURE PAVING (GORE PAVING)

MINOR CONCRETE TEXTURED PAVING (MEDIAN PLANTING)

MAINTAIN EXISTING PLANTED AREA

NOTE:

Underlined portions of botanical name indicate abbreviations used on Planting Plans.

PLANT LIST

NO SCALE

PL-1

REVISED BY: PS — DATE REVISED: 04-15-10
CALCULATED-DESIGNED BY: KEN CHAN — CHECKED BY: I-HONG SUN
SENIOR LANDSCAPE ARCHITECT: ERIC DICKSON
STATE OF CALIFORNIA - DEPARTMENT OF TRANSPORTATION — Caltrans — LANDSCAPE ARCHITECTURE

LAST REVISION 04-16-10 — DATE PLOTTED => 17-FEB-2011 — TIME PLOTTED => 11:47

Dist	COUNTY	ROUTE	POST MILES TOTAL PROJECT	SHEET No.	TOTAL SHEETS
12	Ora	5	5.6/6.6	67	154

Ronald Wong 09-13-10
LICENSED LANDSCAPE ARCHITECT

2-14-11
PLANS APPROVAL DATE

LICENSED LANDSCAPE ARCHITECT RONALD WONG 1555 Ronald Wong Signature 01-31-12 Renewal Date 09-13-10 Date STATE OF CALIFORNIA

THE STATE OF CALIFORNIA OR ITS OFFICERS OR AGENTS SHALL NOT BE RESPONSIBLE FOR THE ACCURACY OR COMPLETENESS OF SCANNED COPIES OF THIS PLAN SHEET.

NOTE:

FOR ACCURATE RIGHT OF WAY DATA, CONTACT RIGHT OF WAY ENGINEERING AT THE DISTRICT OFFICE.

MINOR CONCRETE (GORE PAVING) DETAIL

PLAN VIEW (NO SCALE)

MINOR CONCRETE (GORE PAVING)

SECTION (NO SCALE)

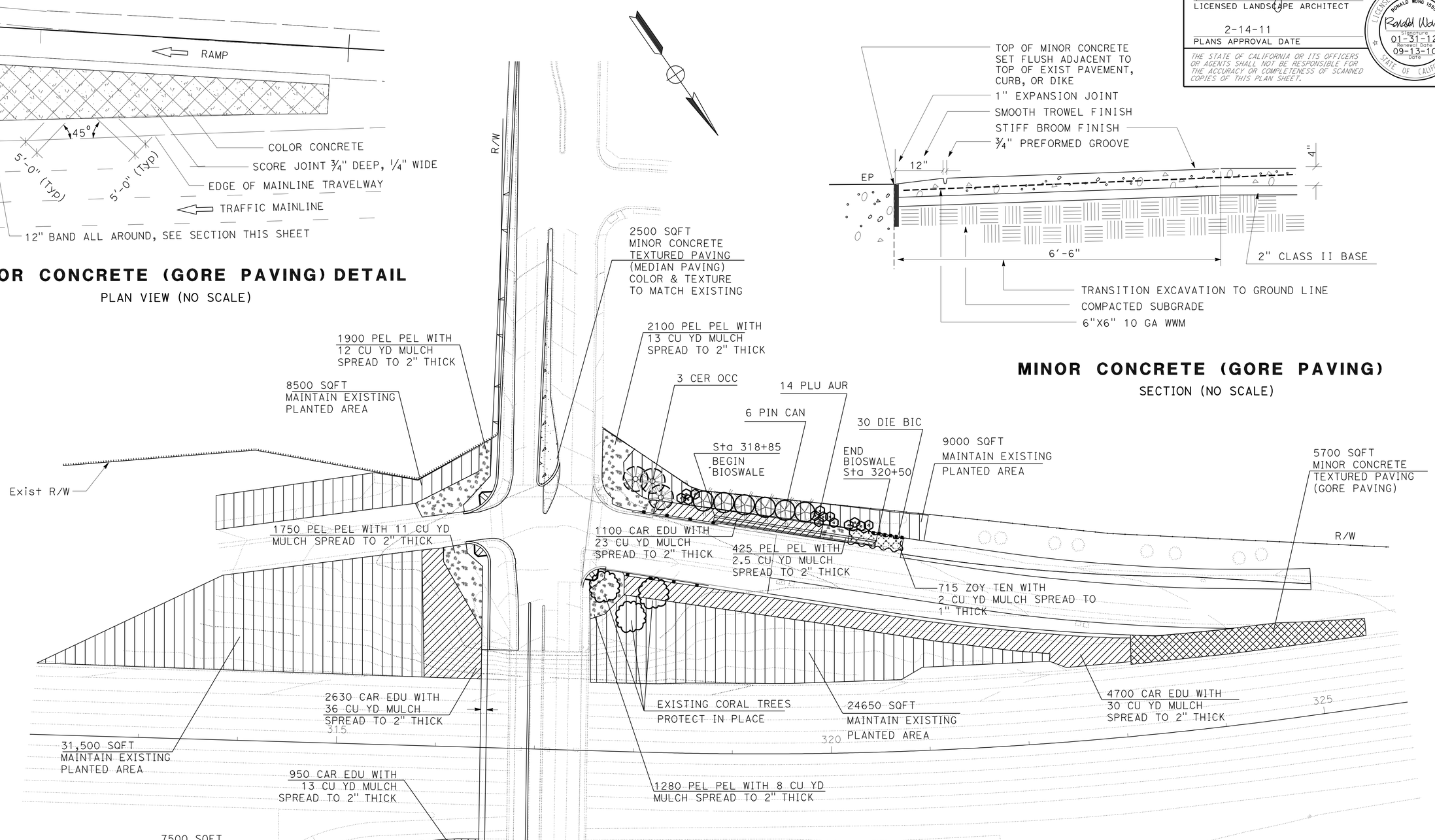

PLANTING PLAN

SCALE: 1" = 50'

PP-1

THIS PLAN ACCURATE FOR LANDSCAPE WORK ONLY

REVISED BY	PS
DATE REVISED	04-5-10
CALCULATED-DESIGNED BY	PAUL SUN
CHECKED BY	RONALD WONG
SENIOR LANDSCAPE ARCHITECT	ERIC DICKSON

STATE OF CALIFORNIA - DEPARTMENT OF TRANSPORTATION
Caltrans® LANDSCAPE ARCHITECTURE

LAST REVISION 04-05-10 | DATE PLOTTED => 17-FEB-2011 | TIME PLOTTED => 08:36

Dist	COUNTY	ROUTE	POST MILES TOTAL PROJECT	SHEET No.	TOTAL SHEETS
12	Ora	5	5.6/6.6	68	154

Ronald Wong 09-13-10
LICENSED LANDSCAPE ARCHITECT

2-14-11
PLANS APPROVAL DATE

LICENSED LANDSCAPE ARCHITECT
RONALD WONG 1555
Ronald Wong
Expiration Date
01-31-12
Renewal Date
09-13-10
Date
STATE OF CALIFORNIA

THE STATE OF CALIFORNIA OR ITS OFFICERS OR AGENTS SHALL NOT BE RESPONSIBLE FOR THE ACCURACY OR COMPLETENESS OF SCANNED COPIES OF THIS PLAN SHEET.

NOTE:

FOR ACCURATE RIGHT OF WAY DATA, CONTACT RIGHT OF WAY ENGINEERING AT THE DISTRICT OFFICE.

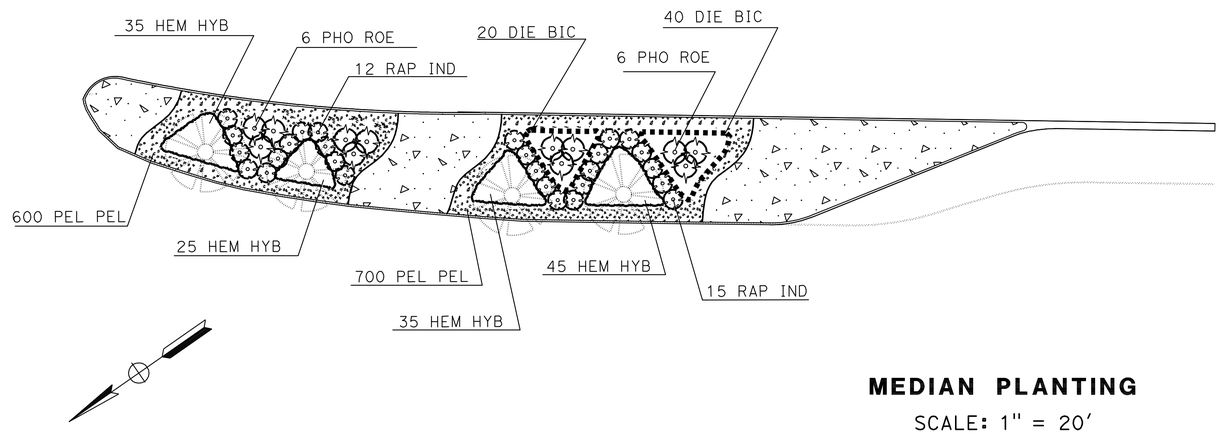

MEDIAN PLANTING

SCALE: 1" = 20'

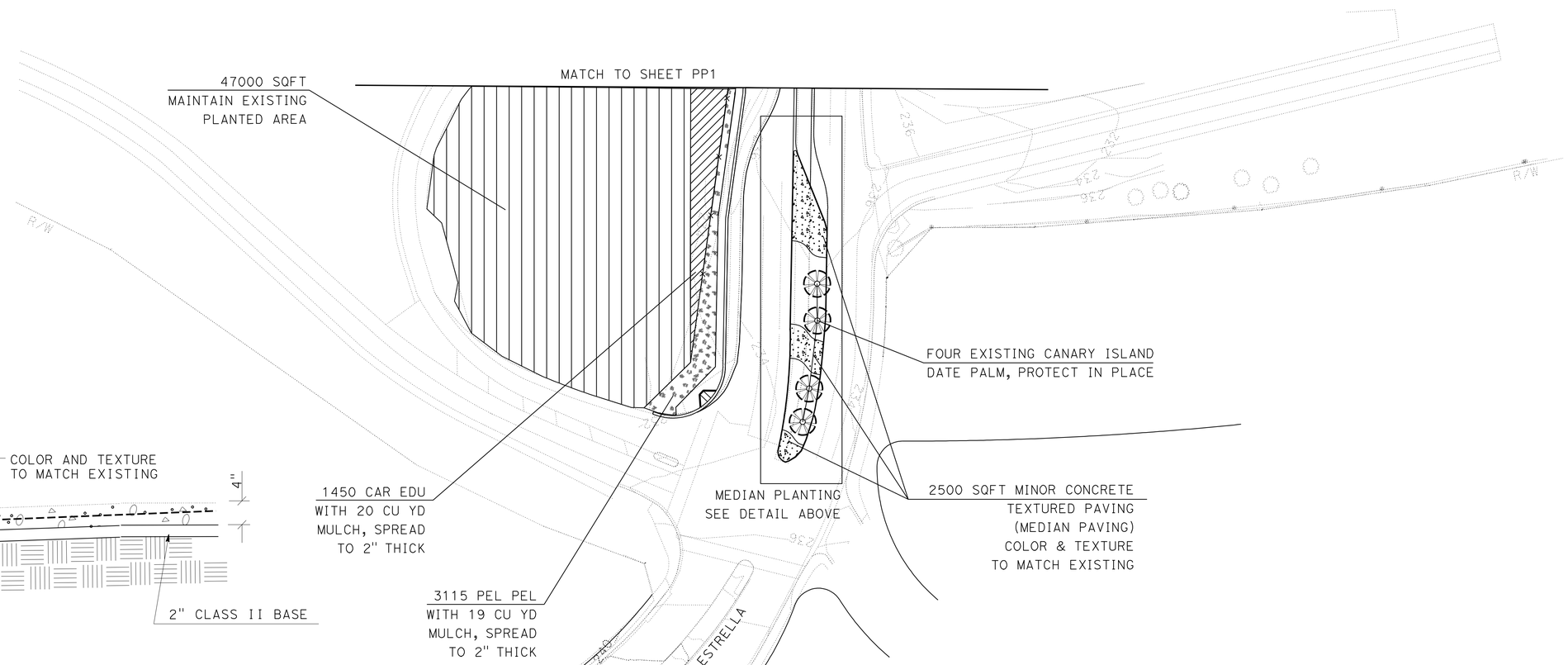

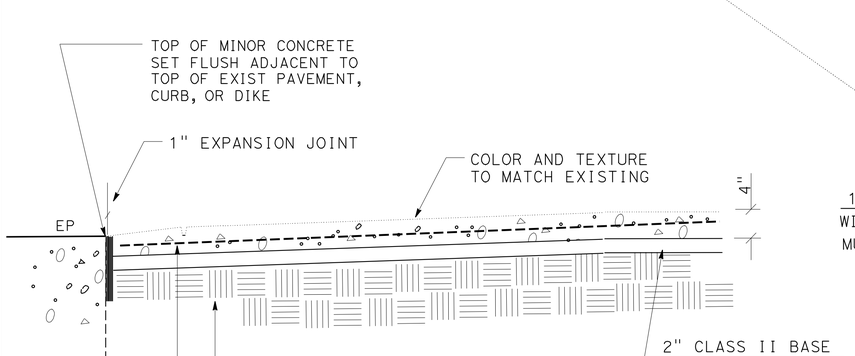

MINOR CONCRETE (TEXTURED PAVING)

SECTION (NO SCALE)

THIS PLAN ACCURATE FOR LANDSCAPE WORK ONLY

PLANTING PLAN

SCALE: 1" = 50'

PP-2

STATE OF CALIFORNIA - DEPARTMENT OF TRANSPORTATION
Caltrans
LANDSCAPE ARCHITECTURE

SENIOR LANDSCAPE ARCHITECT: ERIC DICKSON

CALCULATED-DESIGNED BY: PAUL SUN
CHECKED BY: RONALD WONG

REVISED BY: PS
DATE REVISED: 04-5-10

LAST REVISION 04-05-10
DATE PLOTTED => 17-FEB-2011
TIME PLOTTED => 11:51

Dist	COUNTY	ROUTE	POST MILES TOTAL PROJECT	SHEET No.	TOTAL SHEETS
12	Ora	5	5.6/6.6	69	154

Ronald Wong 09-13-10
LICENSED LANDSCAPE ARCHITECT

2-14-11
PLANS APPROVAL DATE

LICENSED LANDSCAPE ARCHITECT
RONALD WONG 1335
Ronald Wong
Expiration Date
01-31-12
Renewal Date
09-13-10
Date
STATE OF CALIFORNIA

THE STATE OF CALIFORNIA OR ITS OFFICERS OR AGENTS SHALL NOT BE RESPONSIBLE FOR THE ACCURACY OR COMPLETENESS OF SCANNED COPIES OF THIS PLAN SHEET.

NOTE:

FOR ACCURATE RIGHT OF WAY DATA, CONTACT
RIGHT OF WAY ENGINEERING AT THE DISTRICT OFFICE.

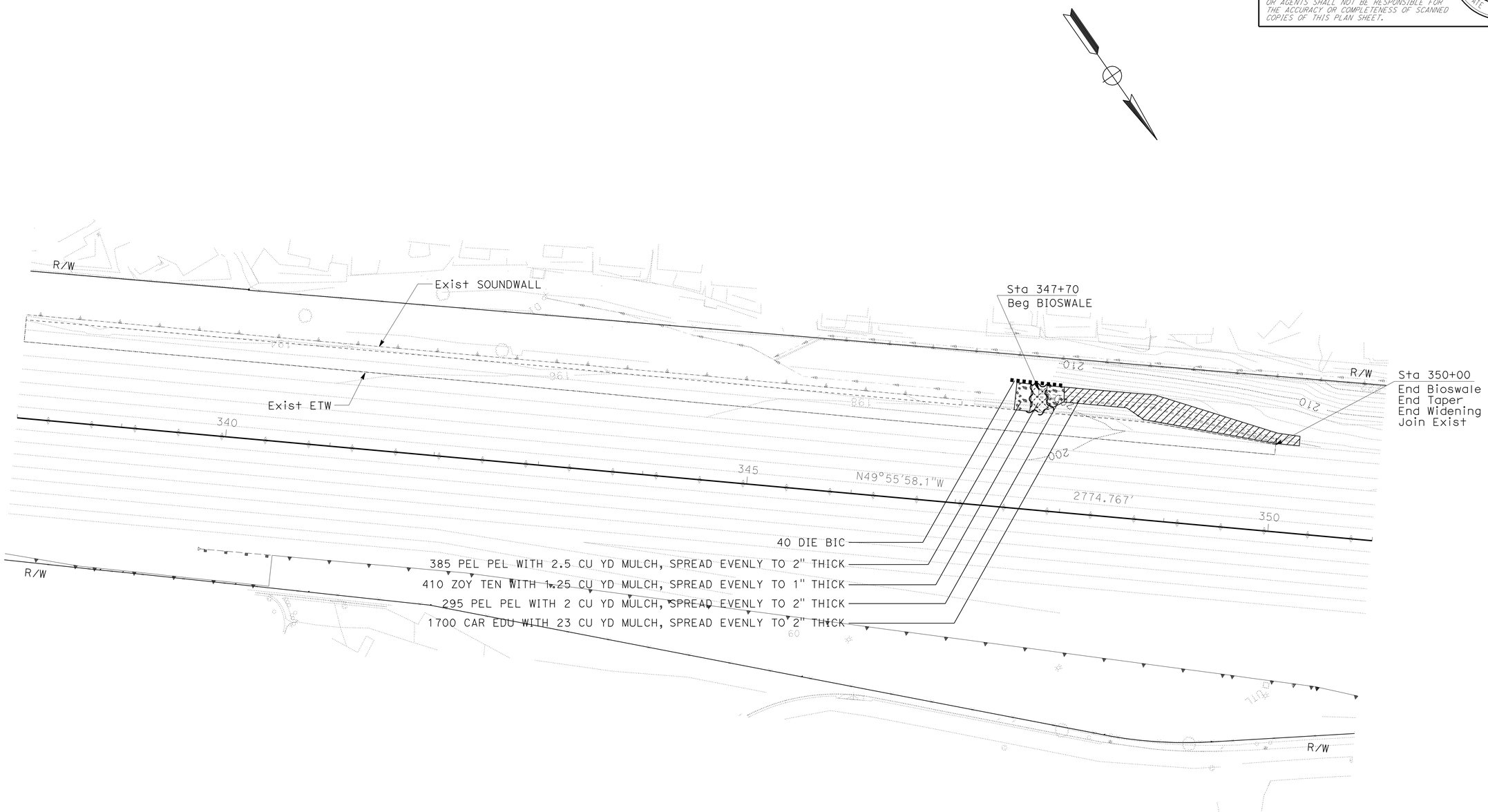

PLANTING PLAN

SCALE: 1" = 50'

PP-3

THIS PLAN ACCURATE FOR LANDSCAPE WORK ONLY

REVISED BY	PS
DATE REVISED	1-5-10
CALCULATED-DESIGNED BY	PAUL SUN
CHECKED BY	RONALD WONG
SENIOR LANDSCAPE ARCHITECT	ERIC DICKSON

STATE OF CALIFORNIA - DEPARTMENT OF TRANSPORTATION
Caltrans® LANDSCAPE ARCHITECTURE

LAST REVISION 04-05-10 | DATE PLOTTED => 17-FEB-2011 | TIME PLOTTED => 08:37

Dist	COUNTY	ROUTE	POST MILES TOTAL PROJECT	SHEET No.	TOTAL SHEETS
12	Ora	5	5.6/6.6	70	154

Ronald Wong 09-13-10
LICENSED LANDSCAPE ARCHITECT

2-14-11
PLANS APPROVAL DATE

LICENSED LANDSCAPE ARCHITECT
RONALD WONG 1555
Ronald Wong
Signature
01-31-12
Renewal Date
09-13-10
Date
STATE OF CALIFORNIA

THE STATE OF CALIFORNIA OR ITS OFFICERS OR AGENTS SHALL NOT BE RESPONSIBLE FOR THE ACCURACY OR COMPLETENESS OF SCANNED COPIES OF THIS PLAN SHEET.

NOTE:

FOR ACCURATE RIGHT OF WAY DATA, CONTACT RIGHT OF WAY ENGINEERING AT THE DISTRICT OFFICE.

WATER METER INFORMATION			
WATER DISTRICT:	SOUTH COAST	CONTROLLER(S) SERVED BY W.M.	
W.M. ADDRESS:	-	CONTR.	MAX GPM
METER SIZE/TYPE:	3"/POTABLE	N	62
STATIC PRESSURE	72 PSI		
W.M. ELEVATION:	-		
HGL ELEVATION	-		

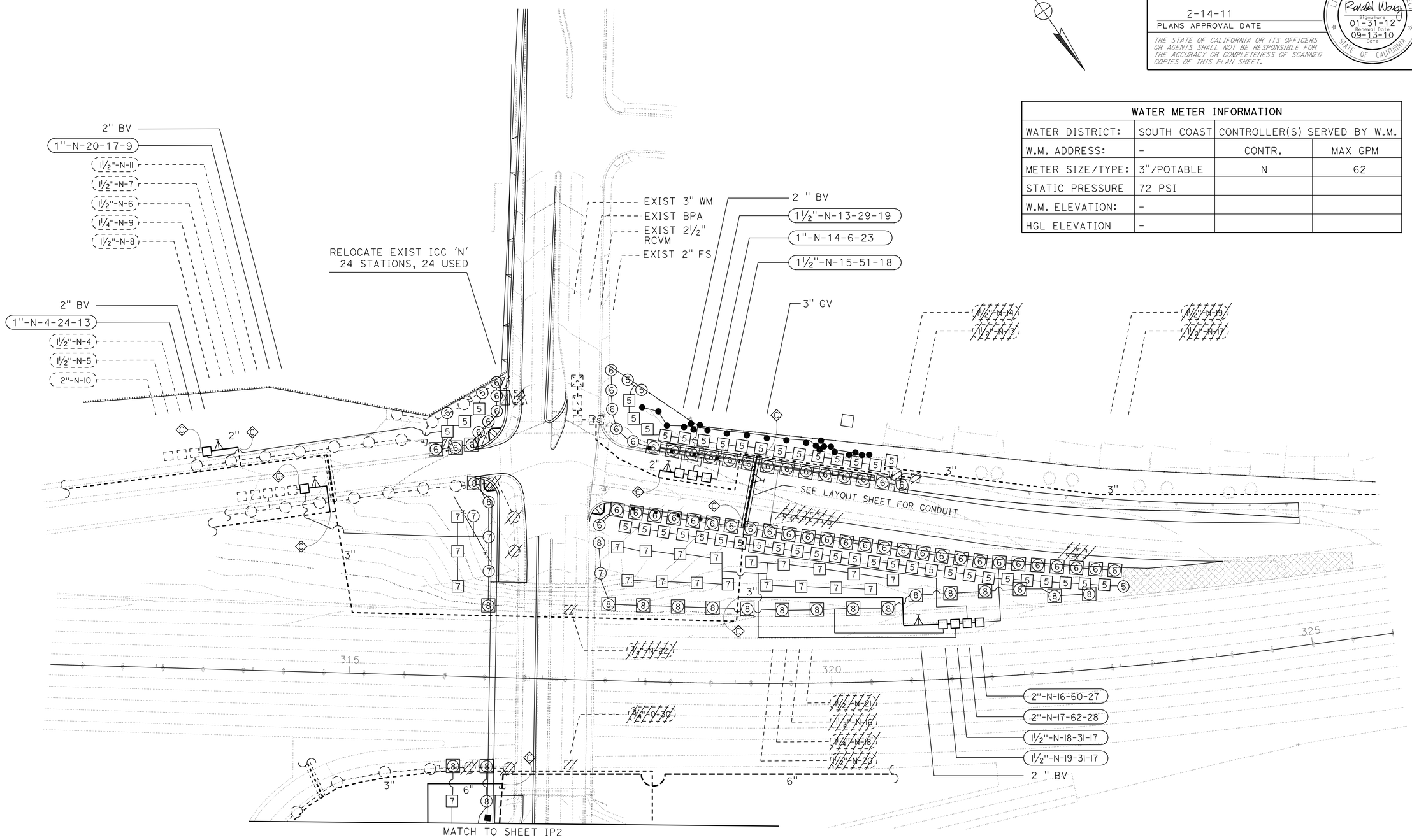

IRRIGATION PLAN

SCALE: 1" = 50'

IP-1

THIS PLAN ACCURATE FOR LANDSCAPE WORK ONLY

STATE OF CALIFORNIA - DEPARTMENT OF TRANSPORTATION
Caltrans®
LANDSCAPE ARCHITECTURE

SENIOR LANDSCAPE ARCHITECT: ERIC DICKSON

CALCULATED-DESIGNED BY: PAUL SUN
CHECKED BY: RONALD WONG

REVISED BY: PS
DATE REVISED: 4-5-10

LAST REVISION 04-05-10
DATE PLOTTED => 17-FEB-2011
TIME PLOTTED => 08:37

BORDER LAST REVISED 4/11/2008

RELATIVE BORDER SCALE IS IN INCHES 0 1 2 3

USERNAME => trmartin
DGN FILE => c0f060t1001.dgn

CU 12216

EA 0F0601

Dist	COUNTY	ROUTE	POST MILES TOTAL PROJECT	SHEET No.	TOTAL SHEETS
12	Ora	5	5.6/6.6	71	154

Ronald Wong 09-13-10
LICENSED LANDSCAPE ARCHITECT

2-14-11
PLANS APPROVAL DATE

LICENSED LANDSCAPE ARCHITECT
RONALD WONG 1535
Ronald Wong
Signature
01-31-12
Renewal Date
09-13-10
Date
STATE OF CALIFORNIA

THE STATE OF CALIFORNIA OR ITS OFFICERS OR AGENTS SHALL NOT BE RESPONSIBLE FOR THE ACCURACY OR COMPLETENESS OF SCANNED COPIES OF THIS PLAN SHEET.

NOTE:

FOR ACCURATE RIGHT OF WAY DATA, CONTACT
RIGHT OF WAY ENGINEERING AT THE DISTRICT OFFICE.

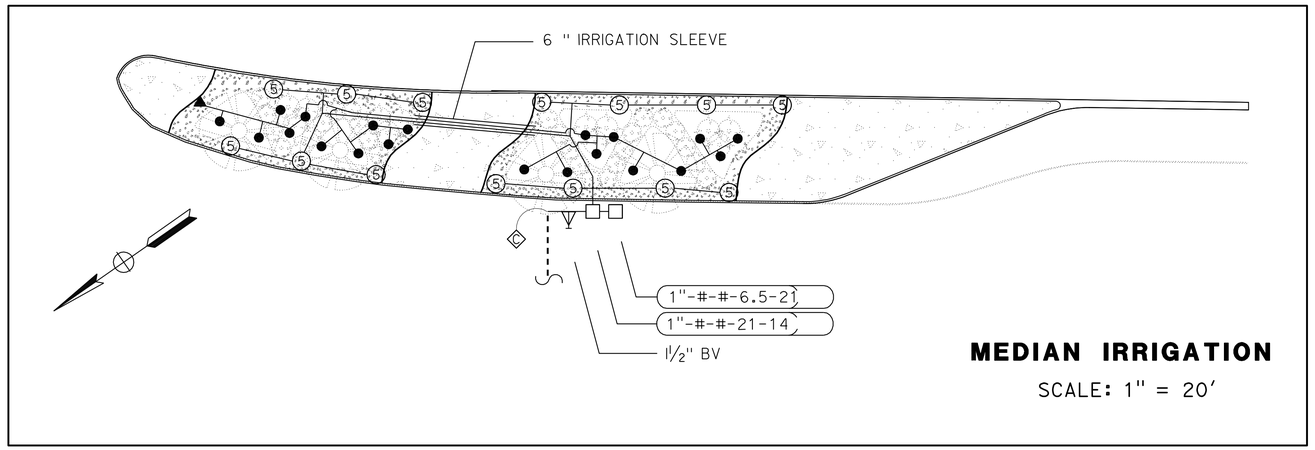

MEDIAN IRRIGATION

SCALE: 1" = 20'

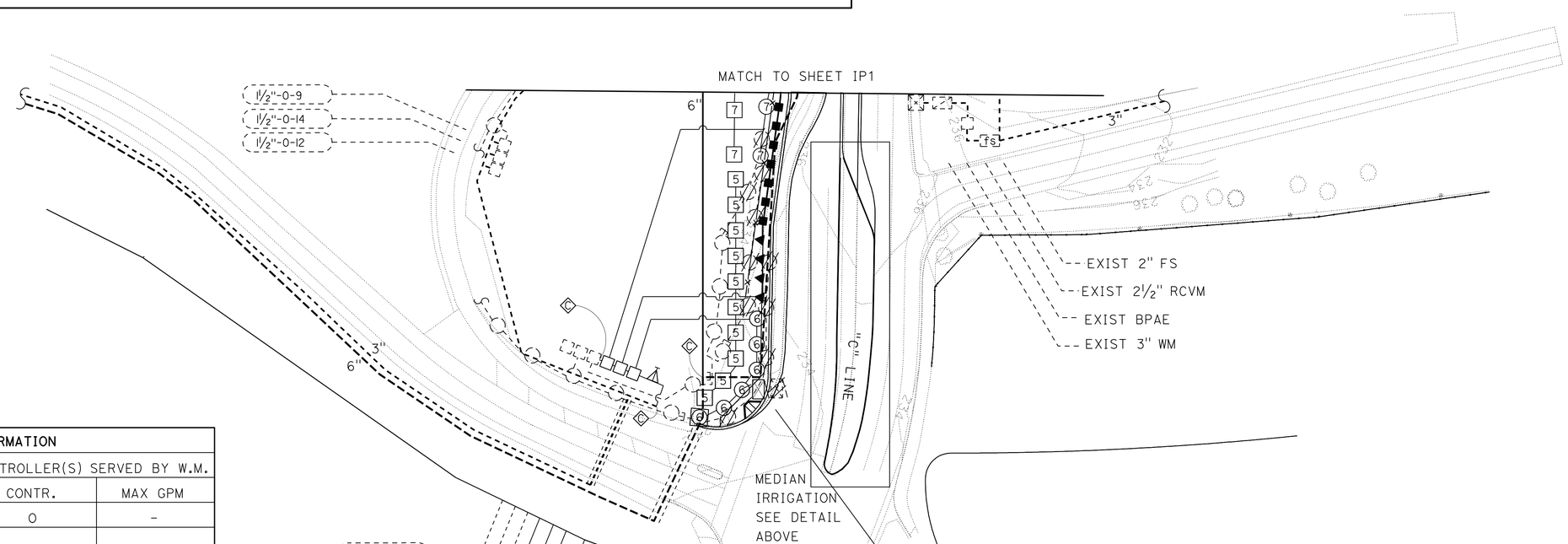

WATER METER INFORMATION			
WATER DISTRICT:	SOUTH COAST	CONTROLLER(S) SERVED BY W.M.	
W.M. ADDRESS:	-	CONTR.	MAX GPM
METER SIZE/TYPE:	3"/POTABLE	0	-
STATIC PRESSURE	72 PSI		
W.M. ELEVATION:	230'		
HGL ELEVATION	-		

IRRIGATION PLAN

SCALE: 1" = 50'

IP-2

THIS PLAN ACCURATE FOR IRRIGATION WORK ONLY

REVISED BY	DATE REVISED
PS	04-05-10

CALCULATED-DESIGNED BY: PAUL SUN
CHECKED BY: RONALD WONG
SENIOR LANDSCAPE ARCHITECT: ERIC DICKSON

STATE OF CALIFORNIA - DEPARTMENT OF TRANSPORTATION
Caltrans®
LANDSCAPE ARCHITECTURE

LAST REVISION 04-05-10
DATE PLOTTED => 17-FEB-2011
TIME PLOTTED => 08:37

Dist	COUNTY	ROUTE	POST MILES TOTAL PROJECT	SHEET No.	TOTAL SHEETS
12	Ora	5	5.6/6.6	72	154

Ronald Wong 09-13-10
LICENSED LANDSCAPE ARCHITECT

2-14-11
PLANS APPROVAL DATE

THE STATE OF CALIFORNIA OR ITS OFFICERS OR AGENTS SHALL NOT BE RESPONSIBLE FOR THE ACCURACY OR COMPLETENESS OF SCANNED COPIES OF THIS PLAN SHEET.

LICENSED LANDSCAPE ARCHITECT
RONALD WONG 1335
Ronald Wong
Signature
01-31-12
Renewal Date
09-13-10
Date
STATE OF CALIFORNIA

NOTE:

FOR ACCURATE RIGHT OF WAY DATA, CONTACT
RIGHT OF WAY ENGINEERING AT THE DISTRICT OFFICE.

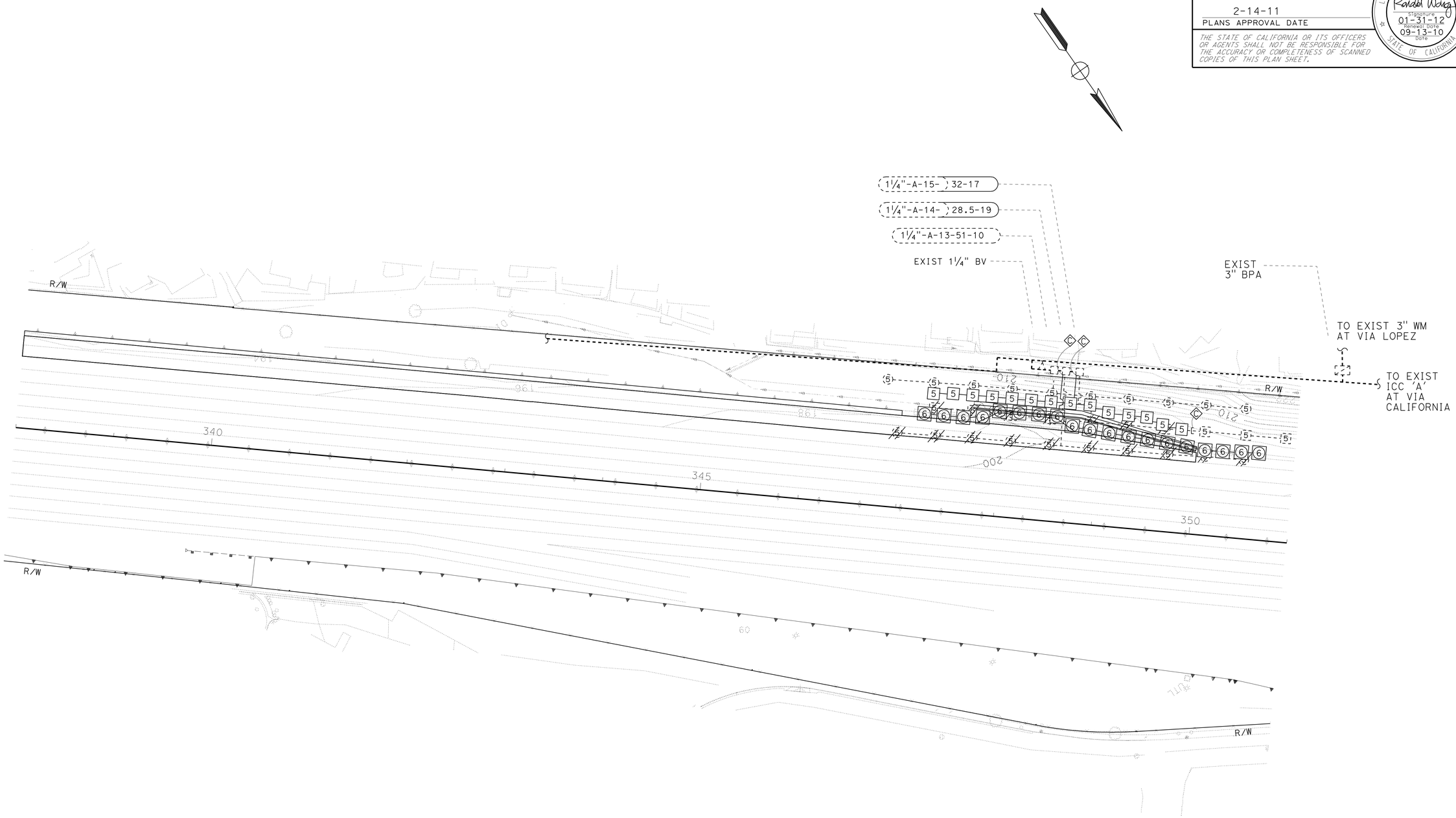

THIS PLAN ACCURATE FOR IRRIGATION WORK ONLY

IRRIGATION PLAN

SCALE : 1" = 50'

IP-3

STATE OF CALIFORNIA - DEPARTMENT OF TRANSPORTATION
Caltrans® LANDSCAPE ARCHITECTURE

SENIOR LANDSCAPE ARCHITECT: ERIC DICKSON

CALCULATED-DESIGNED BY: PAUL SUN
CHECKED BY: RONALD WONG

REVISED BY: PS
DATE REVISED: 04-05-10

LAST REVISION 04-05-10
DATE PLOTTED => 17-FEB-2011
TIME PLOTTED => 08:37

BORDER LAST REVISED 4/11/2008

RELATIVE BORDER SCALE IS IN INCHES 0 1 2 3

USERNAME => trmartin
DGN FILE => c0f060ti003.dgn

CU 12216

EA 0F0601

Dist	COUNTY	ROUTE	POST MILES TOTAL PROJECT	SHEET No.	TOTAL SHEETS
12	Ora	5	5.6/6.6	73	154

Ronald Wong 09-13-10
LICENSED LANDSCAPE ARCHITECT

2-14-11
PLANS APPROVAL DATE

LICENSED LANDSCAPE ARCHITECT — RONALD WONG 1555 — Signature — Expiration Date 01-31-12 — Renewal Date 09-13-10 — Date — STATE OF CALIFORNIA

THE STATE OF CALIFORNIA OR ITS OFFICERS OR AGENTS SHALL NOT BE RESPONSIBLE FOR THE ACCURACY OR COMPLETENESS OF SCANNED COPIES OF THIS PLAN SHEET.

SPRINKLER SCHEDULE

SYMBOL	TYPE	DESCRIPTION	SPRAY PATTERN	OPERATING PRESSURE (PSI)	PRESSURE COMPENSATING	PLUS/MINUS 5% DISCHARGE: GALLONS PER MINUTE (GPM)	PLUS/MINUS 5% DISCHARGE: GALLONS PER HOUR (GPH)	RADIUS (Ft)	WIDTH x LENGTH (Ft)	MATERIAL	INLET CONNECTION (NPT INCH)	POSITIVE-LOCKING ADJ ARC STOP	BACKSPLASH PREVENTER	DIFFUSER PIN	DISTANCE CONTROL FLAP	ADJ DISCHARGE	RISER: TYPE	RISER: MATERIAL: PLASTIC	RISER: MATERIAL: GALVANIZED	RISER: SIZE (IPS INCH)	RISER: HEIGHT (INCH)	RISER: FLOW SHUTOFF DEVICE	⑤ SWING JOINT (TYPE)	RISER SUPPORT	SPRINKLER PROTECTOR (TYPE)	REMARKS
⑦/[7]	A-7	GEAR DRIVEN	P/F	35	—	1.81	—	36	—	PL	¾"	—	—	—	—	X	IV	X	—	¾"	18"	—	I	X	—	⑤⑨
⑧	A-8	GEAR DRIVEN	P	35	—	1.81	—	36	—	PL	¾"	—	—	—	—	X	—	X	—	¾"	—	—	I	—	—	12" POP-UP ⑤⑨
[8]	A-8	GEAR DRIVEN	P	35	—	1.81	—	36	—	PL	¾"	—	—	—	—	X	—	X	—	¾"	—	—	I	—	II	12" POP-UP ⑤⑨
⑤/[5]	A-5	STREAM SPRAY	P/F	30	—	1.5/3.0	—	21	—	PL	½"	—	—	—	—	X	IV	X	—	½"	18"	—	I	X	—	⑤⑨
⑥	A-6	STREAM SPRAY	P	30	—	1.50	—	21	—	PL	½"	—	—	—	—	X	—	X	—	½"	—	—	I	—	—	12" POP-UP ⑤⑨
[6]	A-6	STREAM SPRAY	P	30	—	1.50	—	21	—	PL	½"	—	—	—	—	X	—	X	—	½"	—	—	I	—	II	12" POP-UP ⑤⑨
▲	B-2	SHRUB SPRAY	H	30	—	0.92	—	15	—	PL	½"	—	—	—	—	X	—	X	—	½"	—	—	I	—	—	12" POP-UP ⑤⑨
■	B-4	STRIP SPRAY	SST	30	—	1.21	—	—	4X30	PL	½"	—	—	—	—	X	—	X	—	½"	—	—	I	—	—	12" POP-UP ⑤⑨
●	C-3	SPRAY	Q	30	—	0.26	—	8	—	PL	½"	—	—	—	—	X	II	X	—	½"	12"	—	I	—	—	⑧

APPLICABLE WHEN CIRCLED BELOW: X IN BOX DENOTES REQUIREMENT

1 - See Special Provisions.
2 - If a pressure compensating device is specified, the discharge and radii shown reflect its use.
3 - Arc Stop shall be fitted with a nut and bolt.
4 - Vinyl-coated cast iron housing.
⑤ - Swing Joints required adjacent to shoulders, curbs, sidewalks, and dikes.
6 - Unless otherwise shown on plans.
7 - Install 0.6 pressure compensating screen.
⑧ - One plant receives one sprinkler typical.
⑨ - Lowest Head Check Valve.

ABBREVIATIONS

F — full circle
P — part circle
F/P — full/part circle
Q — quarter circle
T — third circle
H — half circle
TT — two third circle
TQ — three quarter circle
CST — center strip
SST — side strip
EST — end strip
Ft — feet/foot
GPM — gallons per minute
GPH — gallons per hour
Adj — adjustable
PL — plastic
B/B — brass/bronze
B/PL — brass/plastic
B/B/PL — brass/bronze/plastic
NPT — national pipe thread
IPS — iron pipe size
PSI — pounds per square inch

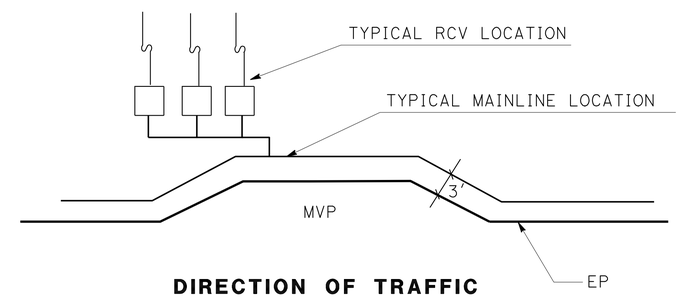

DIRECTION OF TRAFFIC

RCV/MVP DETAIL
NO SCALE

NOTE:

NEW CONTROL AND NEUTRAL CONDUCTORS (CNC) NOT SHOWN SHALL BE INSTALLED CONNECTING ALL EXISTING AND UPGRADED IRRIGATION CONTROLLERS, NEW REMOTE CONTROL VALVES, EXISTING MASTER REMOTE CONTROL VALVES, AND FLOW SENSORS. ALL CNC WIRES IN EXISTING IRRIGATION CROSSOVER SHALL BE REPLACED WITH NEW CNC WIRES.

ALL NEW MAINLINES SHALL BE 3", GATE VALVES SHALL BE 3", UNLESS OTHERWISE NOTED.

TYPE C-3 SPRINKLERS SHALL BE INSTALLED ON THE LOWER SIDE OF SLOPE, ON THE LOWER SIDE OF PLANTS, WITHIN PLANT BASIN AND SPRAY TOWARDS THE PLANT.

IRRIGATION CROSSOVERS

LOCATION: LINE	LOCATION: STATION	SIDE: Lt	SIDE: Rt	CONDUIT TYPE ③: SIZE (INCH)	CONDUIT TYPE ③: LENGTH (LF)	(N) WATER LINE CROSSOVER SIZE (INCH)	(N) SPRINKLER CONTROL CROSSOVER SIZE (INCH)
"B"	319.4	X		10	70	3"	2"
TOTAL							

(N) - NOT A SEPARATE PAY ITEM FOR INFORMATION ONLY
X - DENOTES REQUIREMENT

CONDUIT TYPE:
(Applicable when circled below and shown under the 'CONDUIT TYPE' column heading)

1 BITUMINOUS COATED CORRUGATED STEEL PIPE (0.064 INCH THICK)
2 CORRUGATED STEEL PIPE (0.064 INCH THICK)
③ CORRUGATED HIGH DENSITY POLYETHYLENE PIPE
4 ALTERNATIVE CONDUIT
5 WELDED STEEL PIPE

TYPE A-5, A-6 SPRINKLER

⑤ ⑥ 1"	1¼"	1½"	2"
0 GPM-15 GPM 0 - 10 HEADS	16 GPM-24 GPM 11 - 15 HEADS	25 GPM-34 GPM 16 - 22 HEADS	35 GPM-55 GPM 23 - 34 HEADS

TYPE A-7, A-8 SPRINKLER

⑦ ⑧ [7] 1"	1¼"	1½"
0 GPM-16 GPM 0-8 HEADS	16 GPM-25 GPM 9-13 HEADS	25 GPM-35 GPM 13-19 HEADS

TYPE A-5 SPRINKLER

[5] 1"	1¼"	1½"	2"	2½"
0 GPM-15 GPM 0 - 5 HEADS	16 GPM-24 GPM 6 - 8 HEADS	25 GPM-34 GPM 9 - 11 HEADS	35 GPM-55 GPM 12 - 18 HEADS	56 GPM-80 GPM 19 -26 HEADS

TYPE B-2 SPRINKLER

▲ 1"	1¼"
0 GPM-16 GPM 0-17 HEADS	16 GPM-25 GPM 18-27 HEADS

TYPE B-4 SPRINKLER

■ 1"	1¼"
0 GPM-16 GPM 0-13 HEADS	16 GPM-25 GPM 14-20 HEADS

TYPE C-3 SPRINKLER

● 1"
0 GPM-16 GPM 0-60 HEADS

PIPE SIZING CHARTS (PR 200) (LATERAL LINE)

SPRINKLER SCHEDULE
LD-1

STATE OF CALIFORNIA - DEPARTMENT OF TRANSPORTATION
Caltrans® LANDSCAPE ARCHITECTURE
SENIOR LANDSCAPE ARCHITECT: ERIC DICKSON
CALCULATED-DESIGNED BY: PAUL SUN
CHECKED BY: RONALD WONG
REVISED BY: PS
DATE REVISED: 4-5-10

LAST REVISION 04-05-10 | DATE PLOTTED => 19-OCT-2011 | TIME PLOTTED => 07:47

Dist	COUNTY	ROUTE	POST MILES TOTAL PROJECT	SHEET No.	TOTAL SHEETS
12	Ora	5	5.6/6.6	74	154

09-13-10
REGISTERED ELECTRICAL ENGINEER

2-14-11
PLANS APPROVAL DATE

REGISTERED PROFESSIONAL ENGINEER S. SHAHRIARI No. E 13485 Exp. 9/30/12 ELECTRICAL STATE OF CALIFORNIA

THE STATE OF CALIFORNIA OR ITS OFFICERS OR AGENTS SHALL NOT BE RESPONSIBLE FOR THE ACCURACY OR COMPLETENESS OF SCANNED COPIES OF THIS PLAN SHEET.

NOTE:

FOR ACCURATE RIGHT OF WAY DATA, CONTACT
RIGHT OF WAY ENGINEERING AT THE DISTRICT OFFICE.

NOTES (THIS SHEET):

1. NOT USED

2 RC EXISTING 120/240 V METERED SERVICE IN TYPE III-BF SERVICE EQUIPMENT ENCLOSURE.
ID No. 12-55-005-0-55-0-005.900

3 INSTALL 120/240 V METERED SERVICE IN TYPE III-CF SERVICE EQUIPMENT ENCLOSURE

METER No. 1 ID No. 12-55-005-0005.900
100 A, 240 V, 2P, CB MAIN,
30 A, 240 V, 2P CB FOR SIGN,
40 A, 240 V, 2P CB FOR LIGHTING,
15 A, 120 V, 1P CB FOR PEC.

METER No. 2 ID No. 12-55-005-0005.920
100 A, 240 V, 2P CB MAIN
20 A, 120 V, 1P CB FOR IRRIGATION,
30 A, 120 V, 1P CB FOR NB RAMP METERING,
30 A, 120 V, 1P CB FOR NB RAMP METERING,
30 A, 120 V, 1P CB FOR CCTV.

4 INSTALL 2"C, 2#8 FOR CCTV

5 INSTALL 3"C, 2#8 FOR CCTV

6 INSTALL 3"C, PER UTILITY REQUIREMENT
(CONDUCTORS BY UTILITY COMPANY).

7 INSTALL TYPE H SERVICE

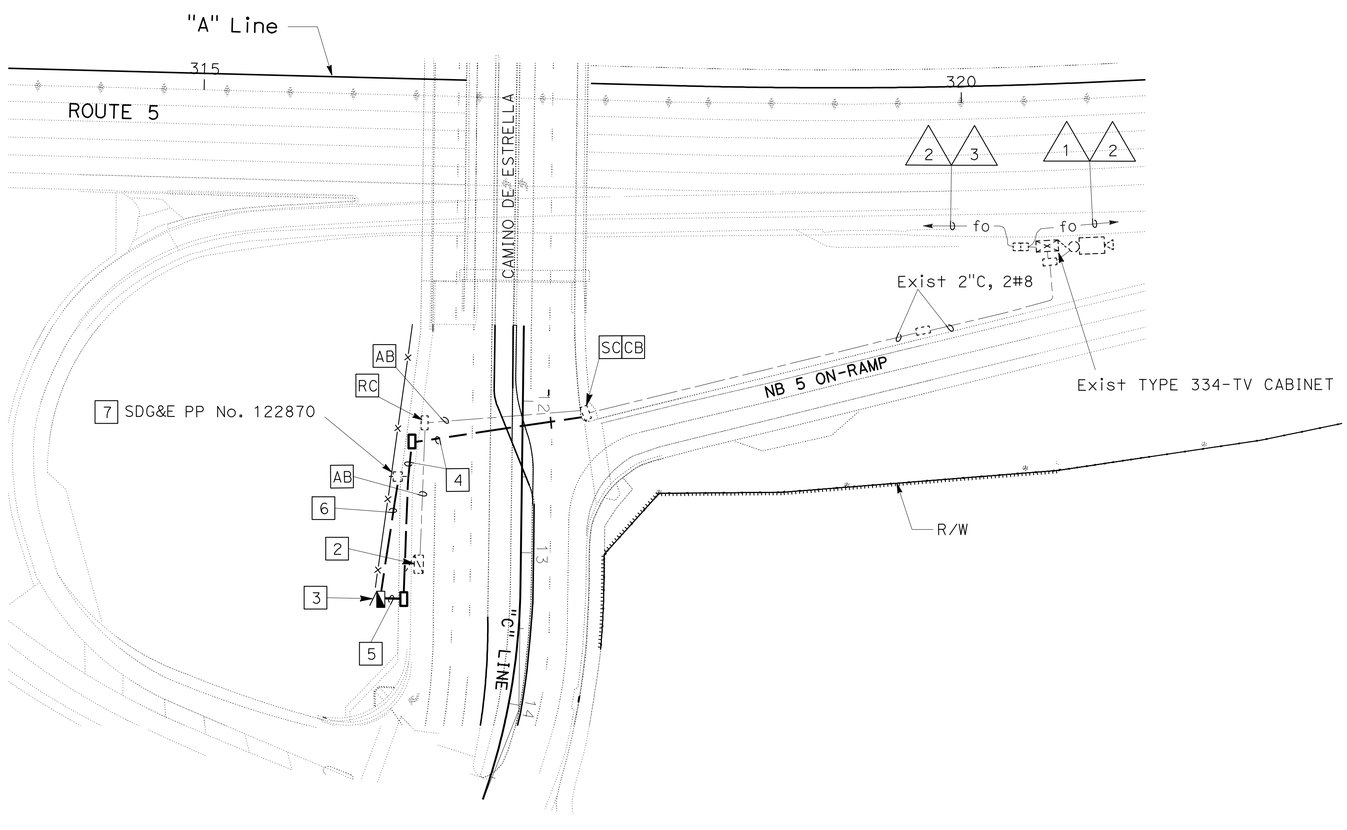

ABBREVIATION:

TYPE A CABLE	36 SINGLEMODE FIBER OPTIC CABLE
TYPE B CABLE	72 SINGLEMODE FIBER OPTIC CABLE
TYPE D CABLE	12 SINGLEMODE FIBER OPTIC CABLE
SDG&E	SAN DIEGO GAS AND ELECTRIC

EXISTING CONDUCTOR AND CONDUIT SCHEDULE

CONDUCTOR TYPE	1	2	3
TYPE A CABLE	1		1
TYPE B CABLE	1		1
TYPE D CABLE			1
PULL ROPE	2	4	1
CONDUIT SIZE	4"	4"	4"

MODIFY
CLOSED CIRCUIT TELEVISION SYSTEM

SCALE: 1" = 50'

E-1

THIS PLAN IS ACCURATE FOR ELECTRICAL WORK ONLY.

STATE OF CALIFORNIA - DEPARTMENT OF TRANSPORTATION
Caltrans® ELECTRICAL DESIGN

FUNCTIONAL SUPERVISOR: SHAHRAM SHAHRIARI
CALCULATED-DESIGNED BY: SOUDABEH AFRASIABI
CHECKED BY: VANESSA TRUONG
REVISED BY
DATE REVISED

LAST REVISION 05-10-10
DATE PLOTTED => 17-FEB-2011
TIME PLOTTED => 08:37

Dist	COUNTY	ROUTE	POST MILES TOTAL PROJECT	SHEET No.	TOTAL SHEETS
12	Ora	5	5.6/6.6	75	154

09-13-10
REGISTERED ELECTRICAL ENGINEER

2-14-11
PLANS APPROVAL DATE

REGISTERED PROFESSIONAL ENGINEER S. SHAHRIARI No. E 13485 Exp. 9/30/12 ELECTRICAL STATE OF CALIFORNIA

THE STATE OF CALIFORNIA OR ITS OFFICERS OR AGENTS SHALL NOT BE RESPONSIBLE FOR THE ACCURACY OR COMPLETENESS OF SCANNED COPIES OF THIS PLAN SHEET.

NOTE:

FOR ACCURATE RIGHT OF WAY DATA, CONTACT RIGHT OF WAY ENGINEERING AT THE DISTRICT OFFICE.

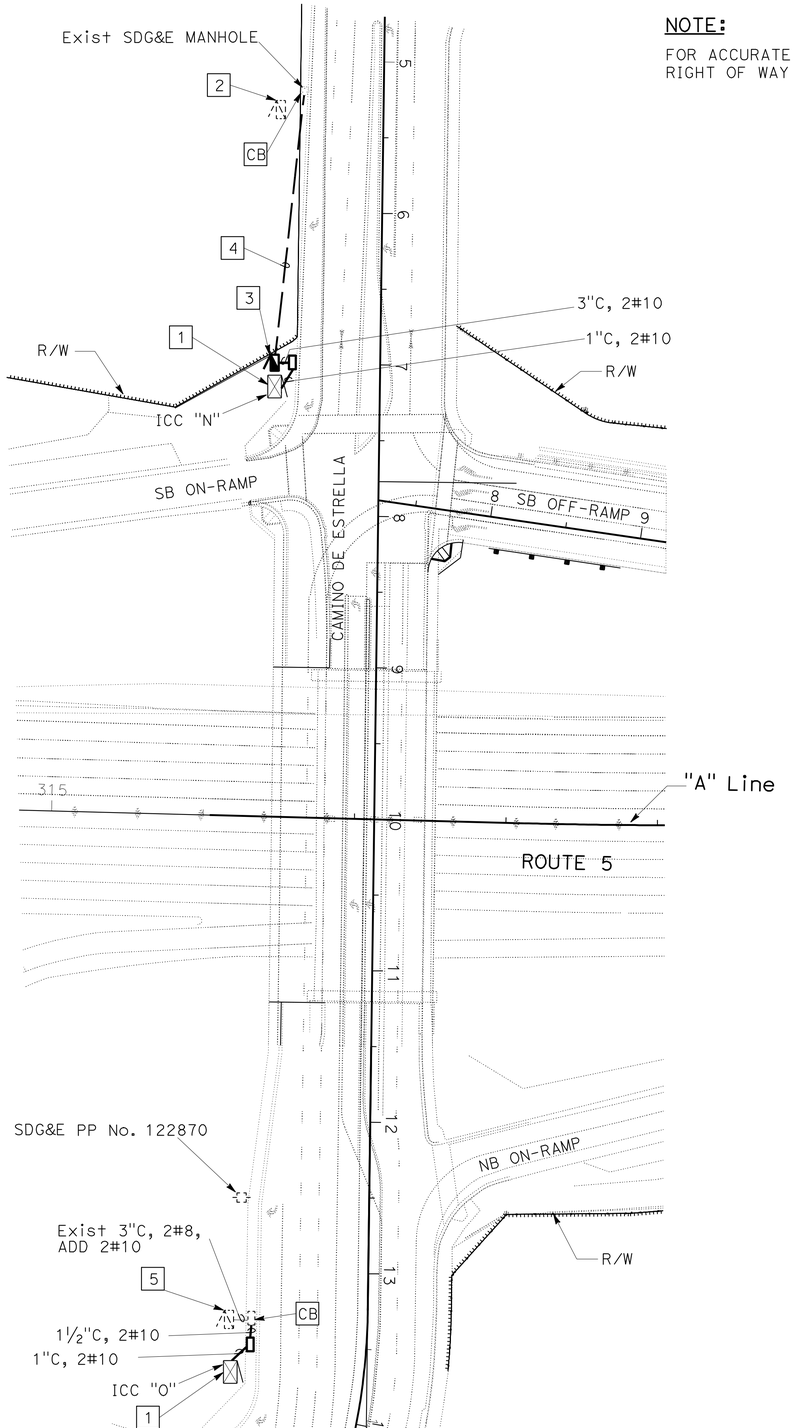

NOTES (THIS SHEET):

1. SEE IRRIGATION PLANS FOR CONTROLLER RELOCATION.

2. RC EXISTING 120/240 V METERED SERVICE IN TYPE III-BF SERVICE EQUIPMENT ENCLOSURE.

3. INSTALL 120/240 V METERED SERVICE IN TYPE III-CF SERVICE EQUIPMENT ENCLOSURE

   METER No. 1 ID No. 12-55-005-0005.580
   100 A, 240 V, 2P CB MAIN
   15 A, 120 V, 1P FOR PEC
   30 A, 240 V, 2P CB FOR SIGN,
   40 A, 240 V, 2P CB FOR LIGHTING,

   METER No. 2 ID No. 12-55-005-0005.587
   100 A, 240 V, 2P CB MAIN
   20 A, 120 V, 1P CB FOR IRRIGATION,
   30 A, 120 V, 1P CB FOR SB RAMP METERING.

4. INSTALL 3"C (CONDUCTORS BY UTILITY COMPANY).

5. SEE SHEET E-1.

ELECTRIC SERVICE (IRRIGATION)

SCALE: 1" = 50'

E-2

THIS PLAN IS ACCURATE FOR ELECTRICAL WORK ONLY.

STATE OF CALIFORNIA - DEPARTMENT OF TRANSPORTATION
Caltrans ELECTRICAL DESIGN

FUNCTIONAL SUPERVISOR: SHAHRAM SHAHRIARI
CALCULATED-DESIGNED BY: SOUDABEH AFRASIABI
CHECKED BY: VANESSA TRUONG
REVISED BY / DATE REVISED

LAST REVISION 05-10-10 | DATE PLOTTED => 17-FEB-2011 | TIME PLOTTED => 08:37

Dist	COUNTY	ROUTE	POST MILES TOTAL PROJECT	SHEET No.	TOTAL SHEETS
12	Ora	5	5.6/6.6	76	154

09-13-10
REGISTERED ELECTRICAL ENGINEER

2-14-11
PLANS APPROVAL DATE

REGISTERED PROFESSIONAL ENGINEER
S. SHAHRIARI
No. E 13485
Exp. 9/30/12
ELECTRICAL
STATE OF CALIFORNIA

THE STATE OF CALIFORNIA OR ITS OFFICERS OR AGENTS SHALL NOT BE RESPONSIBLE FOR THE ACCURACY OR COMPLETENESS OF SCANNED COPIES OF THIS PLAN SHEET.

NOTE:

FOR ACCURATE RIGHT OF WAY DATA, CONTACT RIGHT OF WAY ENGINEERING AT THE DISTRICT OFFICE.

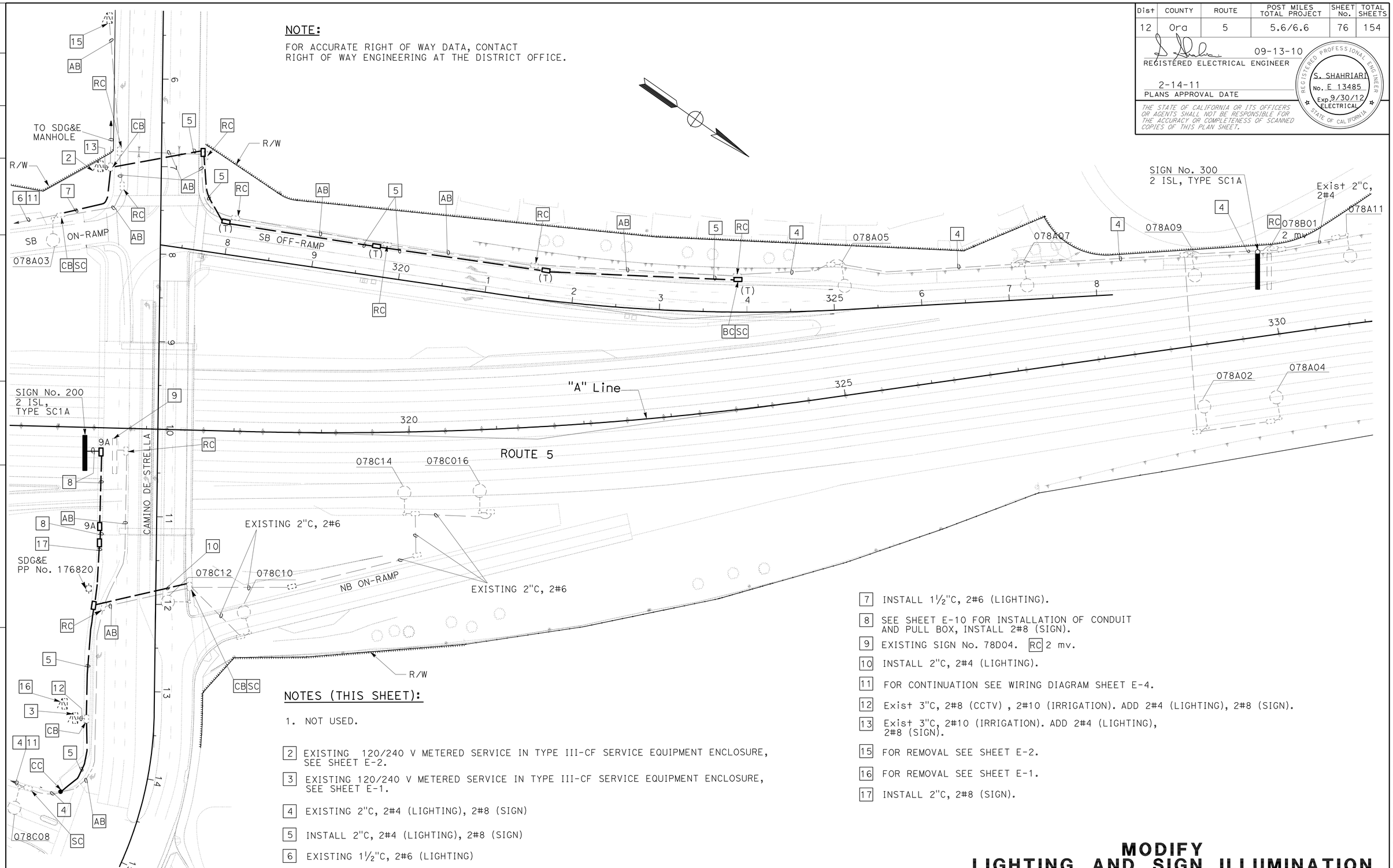

NOTES (THIS SHEET):

1. NOT USED.

2 EXISTING 120/240 V METERED SERVICE IN TYPE III-CF SERVICE EQUIPMENT ENCLOSURE, SEE SHEET E-2.

3 EXISTING 120/240 V METERED SERVICE IN TYPE III-CF SERVICE EQUIPMENT ENCLOSURE, SEE SHEET E-1.

4 EXISTING 2"C, 2#4 (LIGHTING), 2#8 (SIGN)

5 INSTALL 2"C, 2#4 (LIGHTING), 2#8 (SIGN)

6 EXISTING 1½"C, 2#6 (LIGHTING)

7 INSTALL 1½"C, 2#6 (LIGHTING).

8 SEE SHEET E-10 FOR INSTALLATION OF CONDUIT AND PULL BOX, INSTALL 2#8 (SIGN).

9 EXISTING SIGN No. 78D04. RC 2 mv.

10 INSTALL 2"C, 2#4 (LIGHTING).

11 FOR CONTINUATION SEE WIRING DIAGRAM SHEET E-4.

12 Exist 3"C, 2#8 (CCTV) , 2#10 (IRRIGATION). ADD 2#4 (LIGHTING), 2#8 (SIGN).

13 Exist 3"C, 2#10 (IRRIGATION). ADD 2#4 (LIGHTING), 2#8 (SIGN).

15 FOR REMOVAL SEE SHEET E-2.

16 FOR REMOVAL SEE SHEET E-1.

17 INSTALL 2"C, 2#8 (SIGN).

THIS PLAN IS ACCURATE FOR ELECTRICAL WORK ONLY.

MODIFY LIGHTING AND SIGN ILLUMINATION

SCALE: 1" = 50'

E-3

STATE OF CALIFORNIA - DEPARTMENT OF TRANSPORTATION
Caltrans ELECTRICAL DESIGN

FUNCTIONAL SUPERVISOR: SHAHRAM SHAHRIARI
CALCULATED-DESIGNED BY: SOUDABEH AFRASIABI
CHECKED BY: VANESSA TRUONG
REVISED BY / DATE REVISED

LAST REVISION DATE PLOTTED => 18-FEB-2011
05-10-10 TIME PLOTTED => 09:52

BORDER LAST REVISED 4/11/2008
RELATIVE BORDER SCALE IS IN INCHES 0 1 2 3
USERNAME => trmikesl
DGN FILE => c0f060ua003.dgn
CU 12390
EA 0F0601

Dist	COUNTY	ROUTE	POST MILES TOTAL PROJECT	SHEET No.	TOTAL SHEETS
12	Ora	5	5.6/6.6	77	154

09-13-10
REGISTERED ELECTRICAL ENGINEER

2-14-11
PLANS APPROVAL DATE

REGISTERED PROFESSIONAL ENGINEER
S. SHAHRIARI
No. E 13485
Exp. 9/30/12
ELECTRICAL
STATE OF CALIFORNIA

THE STATE OF CALIFORNIA OR ITS OFFICERS OR AGENTS SHALL NOT BE RESPONSIBLE FOR THE ACCURACY OR COMPLETENESS OF SCANNED COPIES OF THIS PLAN SHEET.

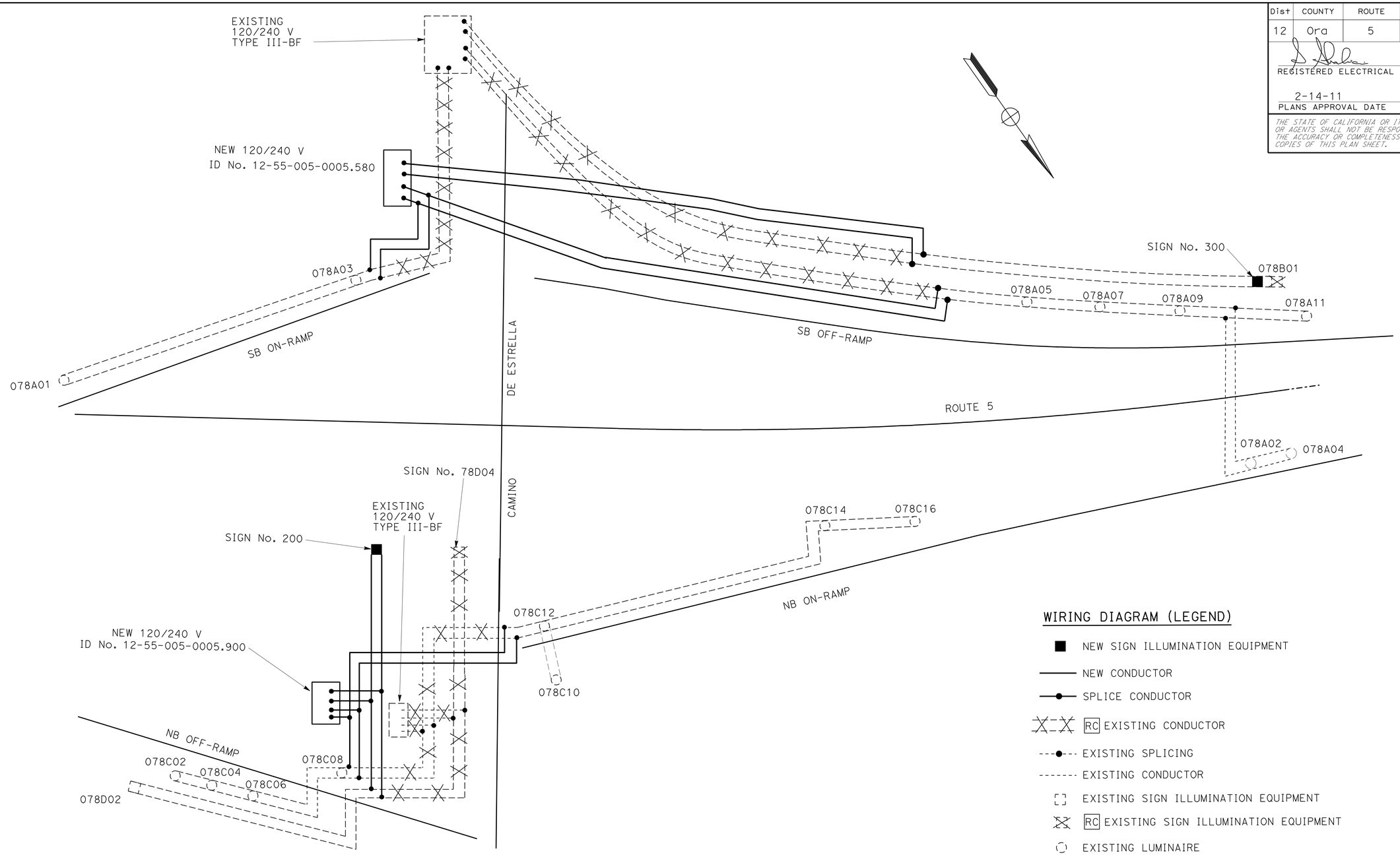

WIRING DIAGRAM (LEGEND)

- NEW SIGN ILLUMINATION EQUIPMENT
- NEW CONDUCTOR
- SPLICE CONDUCTOR
- RC EXISTING CONDUCTOR
- EXISTING SPLICING
- EXISTING CONDUCTOR
- EXISTING SIGN ILLUMINATION EQUIPMENT
- RC EXISTING SIGN ILLUMINATION EQUIPMENT
- EXISTING LUMINAIRE

MODIFY LIGHTING AND SIGN ILLUMINATION

(WIRING DIAGRAM)

NO SCALE

E-4

THIS PLAN IS ACCURATE FOR ELECTRICAL WORK ONLY.

STATE OF CALIFORNIA - DEPARTMENT OF TRANSPORTATION
Caltrans® ELECTRICAL DESIGN

FUNCTIONAL SUPERVISOR: SHAHRAM SHAHRIARI
CALCULATED-DESIGNED BY: SOUDABEH AFRASIABI
CHECKED BY: VANESSA TRUONG
REVISED BY
DATE REVISED

LAST REVISION 05-10-10 | DATE PLOTTED => 17-FEB-2011 | TIME PLOTTED => 09:14

Dist	COUNTY	ROUTE	POST MILES TOTAL PROJECT	SHEET No.	TOTAL SHEETS
12	Ora	5	5.6/6.6	78	154

09-13-10
REGISTERED ELECTRICAL ENGINEER

2-14-11
PLANS APPROVAL DATE

REGISTERED PROFESSIONAL ENGINEER S. SHAHRIARI No. E 13485 Exp. 9/30/12 ELECTRICAL STATE OF CALIFORNIA

THE STATE OF CALIFORNIA OR ITS OFFICERS OR AGENTS SHALL NOT BE RESPONSIBLE FOR THE ACCURACY OR COMPLETENESS OF SCANNED COPIES OF THIS PLAN SHEET.

NOTE:

FOR ACCURATE RIGHT OF WAY DATA, CONTACT RIGHT OF WAY ENGINEERING AT THE DISTRICT OFFICE.

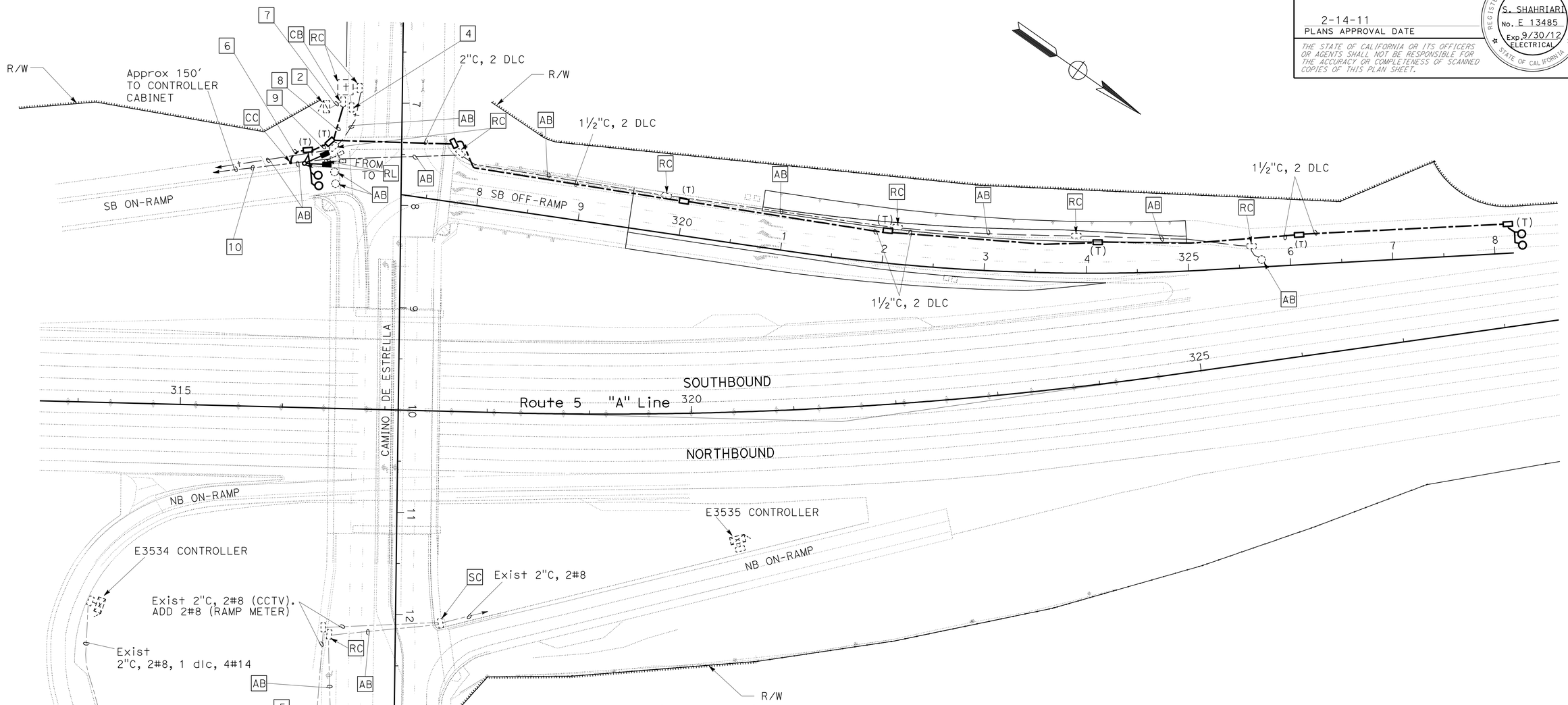

NOTES (THIS SHEET):

1. NOT USED.

2 EXISTING 120/240 V METERED SERVICE IN TYPE III-CF SERVICE EQUIPMENT ENCLOSURE. SEE SHEET E-2 FOR DETAIL.

3 EXISTING 120/240 V METERED SERVICE IN TYPE III-CF SERVICE EQUIPMENT ENCLOSURE. SEE SHEET E-1 FOR DETAIL.

4 RC EXISTING PACIFIC BELL PULL BOX No. 423.

5 EXISTING 3"C, 2#8 (CCTV), 2#10 (IRRIGATION), 2#4 (LIGHTING), 2#8 (SIGN). ADD 4#8 (RAMP METER).

6 INSTALL 2"C, 2#8 (RAMP METERING), 4#14 (METER ON), 4 DLC.

7 EXISTING 3"C, 2#10 (IRRIGATION), 2#4 (LIGHTING), 2#8 (SIGN). ADD 2#8 (RAMP METER).

8 INSTALL 2"C, 2#8.

9 INSTALL 2"C, 2#8, 2 DLC.

10 EXISTING 2"C, 2#8, 3 dlc, 4#14. REMOVE 2#8, 3 dlc, 4#14. INSTALL 2#8, 4 DLC, 4#14.

THIS PLAN IS ACCURATE FOR ELECTRICAL WORK ONLY.

MODIFY RAMP METERING SYSEM

SCALE: 1" = 50'

E-5

STATE OF CALIFORNIA - DEPARTMENT OF TRANSPORTATION
Caltrans® **ELECTRICAL DESIGN**

FUNCTIONAL SUPERVISOR: SHAHRAM SHAHRIARI
CALCULATED-DESIGNED BY: SOUDABEH AFRASIABI
CHECKED BY: VANESSA TRUONG
REVISED BY
DATE REVISED

LAST REVISION 05-10-10
DATE PLOTTED => 18-FEB-2011
TIME PLOTTED => 09:52

Dist	COUNTY	ROUTE	POST MILES TOTAL PROJECT	SHEET No.	TOTAL SHEETS
12	Ora	5	5.6/6.6	79	154

REGISTERED ELECTRICAL ENGINEER 09-13-10 DATE

2-14-11
PLANS APPROVAL DATE

REGISTERED PROFESSIONAL ENGINEER S. SHAHRIARI No. E 13485 Exp. 9/30/12 ELECTRICAL STATE OF CALIFORNIA

THE STATE OF CALIFORNIA OR ITS OFFICERS OR AGENTS SHALL NOT BE RESPONSIBLE FOR THE ACCURACY OR COMPLETENESS OF SCANNED COPIES OF THIS PLAN SHEET.

EXISTING POLE AND EQUIPMENT SCHEDULE

No.	STANDARD			VEH SIG MTG		PED SIG MTG	PPB		HPS LUM
	TYPE	SMA	LMA	MAST ARM	POLE		Ø	ARROW	
(A)	1-A	-	-	-	TV-2	SP-1	6	←	-
(B)	17-1-70	15′	12′	MAT	SV-2-TA	SP-1	2	←	250 W
(C)	1-A	-	-	-	TV-2-T	SP-1-T	2	←	-
(D)	1-A	-	-	-	TV-2-T	SP-1-T	4	→	
(E)	1-A	-	-	-	TV-1-T	-	4	↔	
(F)	17-1-70	20′	12′	MAT	SV-1-T	SP-2-T	4/6	⇄	250 W

NOTE:

FOR ACCURATE RIGHT OF WAY DATA, CONTACT RIGHT OF WAY ENGINEERING AT THE DISTRICT OFFICE.

EXISTING PHASE DIAGRAM

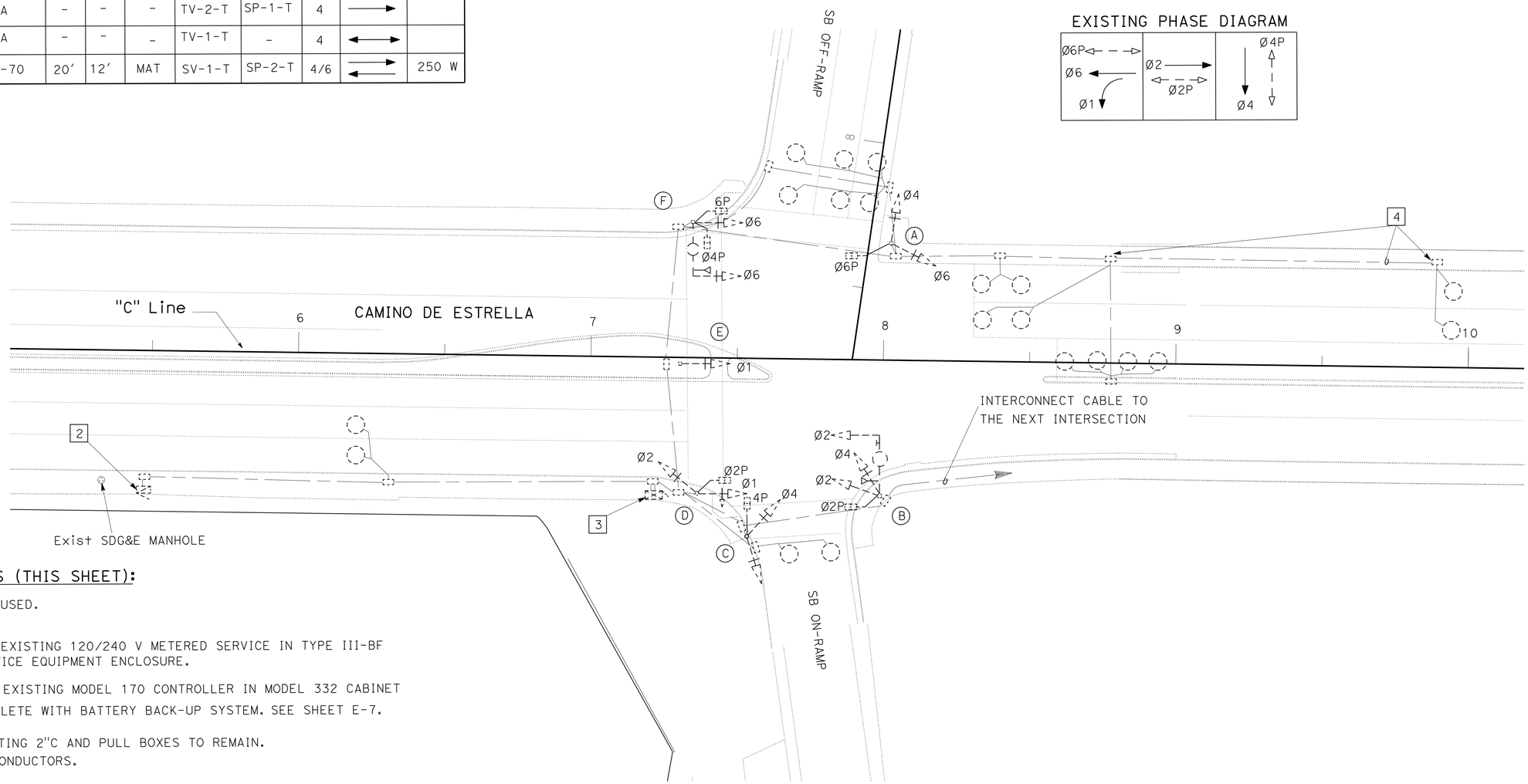

NOTES (THIS SHEET):

1. NOT USED.

2 RC EXISTING 120/240 V METERED SERVICE IN TYPE III-BF SERVICE EQUIPMENT ENCLOSURE.

3 RL EXISTING MODEL 170 CONTROLLER IN MODEL 332 CABINET COMPLETE WITH BATTERY BACK-UP SYSTEM. SEE SHEET E-7.

4 EXISTING 2"C AND PULL BOXES TO REMAIN.
RC CONDUCTORS.

5. AB ALL EXISTING LOOP DETECTORS, AND CONDUITS UNLESS OTHERWISE NOTED.

6. RC EXISTING SIGNAL STANDARDS, TRAFFIC AND PEDESTRIAN SIGNAL HEADS, evd, LUMINAIRES, SIGNS AND PPB ATTACHED ON STANDARD, PULL BOXES UNLESS OTHERWISE NOTED.

SIGNAL AND LIGHTING (LOCATION 1)
(REMOVE)

SCALE: 1" = 20′

THIS PLAN IS ACCURATE FOR ELECTRICAL WORK ONLY.

E-6

STATE OF CALIFORNIA - DEPARTMENT OF TRANSPORTATION
Caltrans® ELECTRICAL DESIGN

FUNCTIONAL SUPERVISOR: SHAHRAM SHAHRIARI
CALCULATED-DESIGNED BY: SOUDABEH AFRASIABI
CHECKED BY: VANESSA TRUONG
REVISED BY / DATE REVISED

LAST REVISION 05-10-10
DATE PLOTTED => 18-FEB-2011
TIME PLOTTED => 09:52

Dist	COUNTY	ROUTE	POST MILES TOTAL PROJECT	SHEET No.	TOTAL SHEETS
12	Ora	5	5.6/6.6	80	154

REGISTERED ELECTRICAL ENGINEER 09-13-10 DATE

2-14-11
PLANS APPROVAL DATE

REGISTERED PROFESSIONAL ENGINEER S. SHAHRIARI No. E 13485 Exp. 9/30/12 ELECTRICAL STATE OF CALIFORNIA

THE STATE OF CALIFORNIA OR ITS OFFICERS OR AGENTS SHALL NOT BE RESPONSIBLE FOR THE ACCURACY OR COMPLETENESS OF SCANNED COPIES OF THIS PLAN SHEET.

NOTES (THIS SHEET):

1. IISNS COLOR AND FONTS PER CITY OF SAN CLEMENTE REQUIREMENTS. TYPE "A" IISNS, WHITE 8" UPPERCASE/6" LOWER CASE HWY GOTHIC E FONT ON GREEN BACKGROUND (NuArt 3M 1177 EC GREEN FILM) or APPROVED EQUAL BY THE CITY.

2 INSTALL RELOCATED MODEL 170 CONTROLLER IN MODEL 332 CABINET COMPLETE WITH BATTERY BACK-UP SYSTEM.

3 INSTALL 120/240 V METERED SERVICE IN TYPE III-BF SERVICE EQUIPMENT ENCLOSURE.
ID No. 12-55-005-0005810
100 A, 240 V, 2P CB FOR MAIN,
40 A, 120 V, 1P CB FOR SIGNAL,
30 A, 120 V, 1P CB FOR LIGHTING,
20 A, 120 V, 1P CB FOR IISNS,
15 A, 120 V, 1P CB FOR PEC.

4 INSTALL STATE-FURNISHED EMERGENCY VEHICLE DETECTOR (PROVIDED BY CITY) ON SIGNAL MAST ARM.

5 EXISTING 2"C, mt. INSTALL 12-PR#19 SIC.

6 INSTALL 3"C (CONDUCTORS BY UTILITY COMPANY).

7 INSTALL TYPE-I PEDESTRIAN BARRICADE WITH TWO SIGNS OF R9-3A AND R9-3B BACK TO BACK.

8 INSTALL 2"C, 12-PR#19 SIC 220 FT TO SIGNAL CONTROLLER AT CAMINO DE ESTRELLA AND AVENIDA LAS PALMAS.

9 INSTALL 2"C, 12-PR#19 SIC.

10 INSTALL LED COUNTDOWN PEDESTRIAN SIGNAL MODULE.

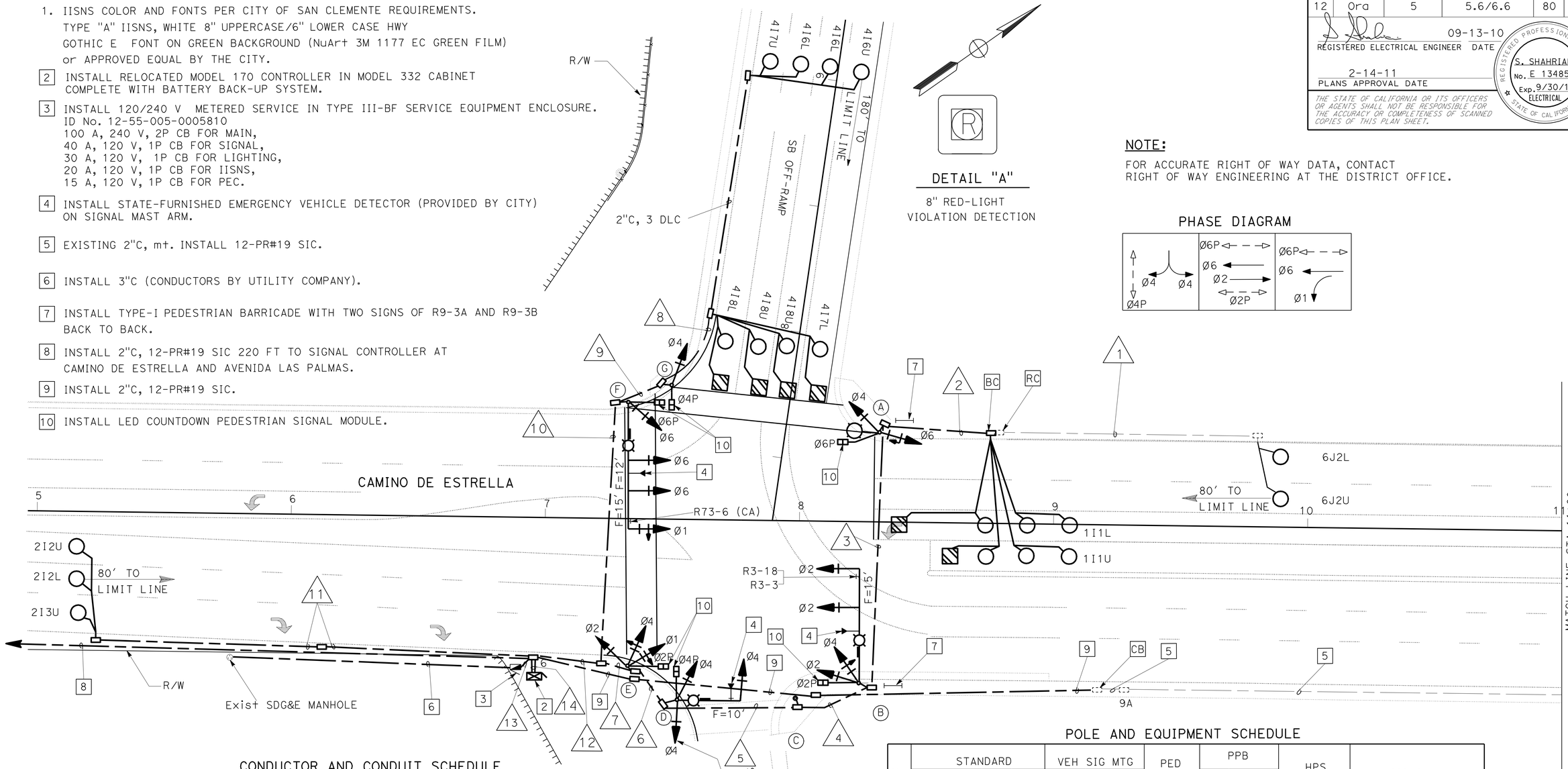

DETAIL "A"

8" RED-LIGHT VIOLATION DETECTION

NOTE:

FOR ACCURATE RIGHT OF WAY DATA, CONTACT RIGHT OF WAY ENGINEERING AT THE DISTRICT OFFICE.

PHASE DIAGRAM

CONDUCTOR AND CONDUIT SCHEDULE

CONDUCTOR	CONDUCTOR RUN	1	2	3	4	5	6	7	8	9	10	11	12	13	14
12CSC	VEHICLE SIGNALS	-	-	2	4	4	5	7	-	1	2	-	9	-	9
3CSC	PPB	-	-	1	1	2	3	4	-	1	2	-	6	-	6
#6	SERVICE	-	-	-	-	-	-	-	-	-	-	-	-	2	2
#10	LUMINAIRE	-	-	2	2	2	2	2	-	-	2	-	2	2	-
	IISNS	-	-	-	2	2	2	2	-	-	2	-	2	2	-
DLC	Ø1 DETECTOR	-	2	2	2	2	2	2	-	-	-	-	2	-	2
	Ø2 DETECTOR	-	-	-	-	-	-	-	-	-	-	3	-	-	3
	Ø4 DETECTOR	-	-	-	-	-	-	-	6	6	6	-	6	-	6
	Ø6 DETECTOR	2	2	2	2	2	2	2	-	-	-	-	2	-	2
*EVC		-	-	-	1	1	2	2	-	-	1	-	3	-	3
12-PR#19 SIC		-	-	-	-	-	-	-	-	-	-	-	-	-	2
CONDUIT SIZE		2"(E)	2"	3"	3½"	3½"	4"	4"	2"	2"	3"	2"	2-3"	2"	2-3"

ALL CONDUCTORS AND CONDUITS ARE NEW UNLESS OTHERWISE NOTED
(E) = EXISTING
(*) = STATE FURNISHED (PROVIDED BY CITY)

POLE AND EQUIPMENT SCHEDULE

No.	STANDARD TYPE	STANDARD SMA	STANDARD LMA	VEH SIG MTG MAST ARM	VEH SIG MTG POLE	PED SIG MTG	PPB Ø	PPB ARROW	HPS LUM	IISNS
A	15TS	-	12'	-	SV-2-TA	SP-1-T	6	→	200 W	-
B	26A-4-100	45'	15'	2-MAS	SV-2-TA	SP-1-T	-	-	310 W	I-5 South →
C	PPB POST	-	-		-	-	2	←	-	-
D	19A-4-100	25'	15'	1-MAS	SV-2-TA	SP-1-T	2	→	310 W	Camino de Estrella
E	1-A	-	-	-	TV-3-T	SP-1-T	4	→	-	-
F	29A-5-100	50'	15'	1-MAT 2-MAS	SV-1-T	SP-1-T	4	←	310 W	← I-5 South
G	1-A	-	-	-	TV-1-T	SP-1-T	6	→	-	-

THIS PLAN IS ACCURATE FOR ELECTRICAL WORK ONLY.

SIGNAL AND LIGHTING (LOCATION 1)

SCALE: 1" = 20'

E-7

STATE OF CALIFORNIA - DEPARTMENT OF TRANSPORTATION
Caltrans ELECTRICAL DESIN

FUNCTIONAL SUPERVISOR: SHAHRAM SHAHRIARI
CALCULATED-DESIGNED BY: SOUDABEH AFRASIABI
CHECKED BY: VANESSA TRUONG
REVISED BY / DATE REVISED

LAST REVISION DATE PLOTTED => 18-FEB-2011
TIME PLOTTED => 09:52
05-10-10

Dist	COUNTY	ROUTE	POST MILES TOTAL PROJECT	SHEET No.	TOTAL SHEETS
12	Ora	5	5.6/6.6	81	154

REGISTERED ELECTRICAL ENGINEER 09-13-10 DATE

2-14-11
PLANS APPROVAL DATE

REGISTERED PROFESSIONAL ENGINEER S. SHAHRIARI No. E 13485 Exp. 9/30/12 ELECTRICAL STATE OF CALIFORNIA

THE STATE OF CALIFORNIA OR ITS OFFICERS OR AGENTS SHALL NOT BE RESPONSIBLE FOR THE ACCURACY OR COMPLETENESS OF SCANNED COPIES OF THIS PLAN SHEET.

NOTE:

FOR ACCURATE RIGHT OF WAY DATA, CONTACT RIGHT OF WAY ENGINEERING AT THE DISTRICT OFFICE.

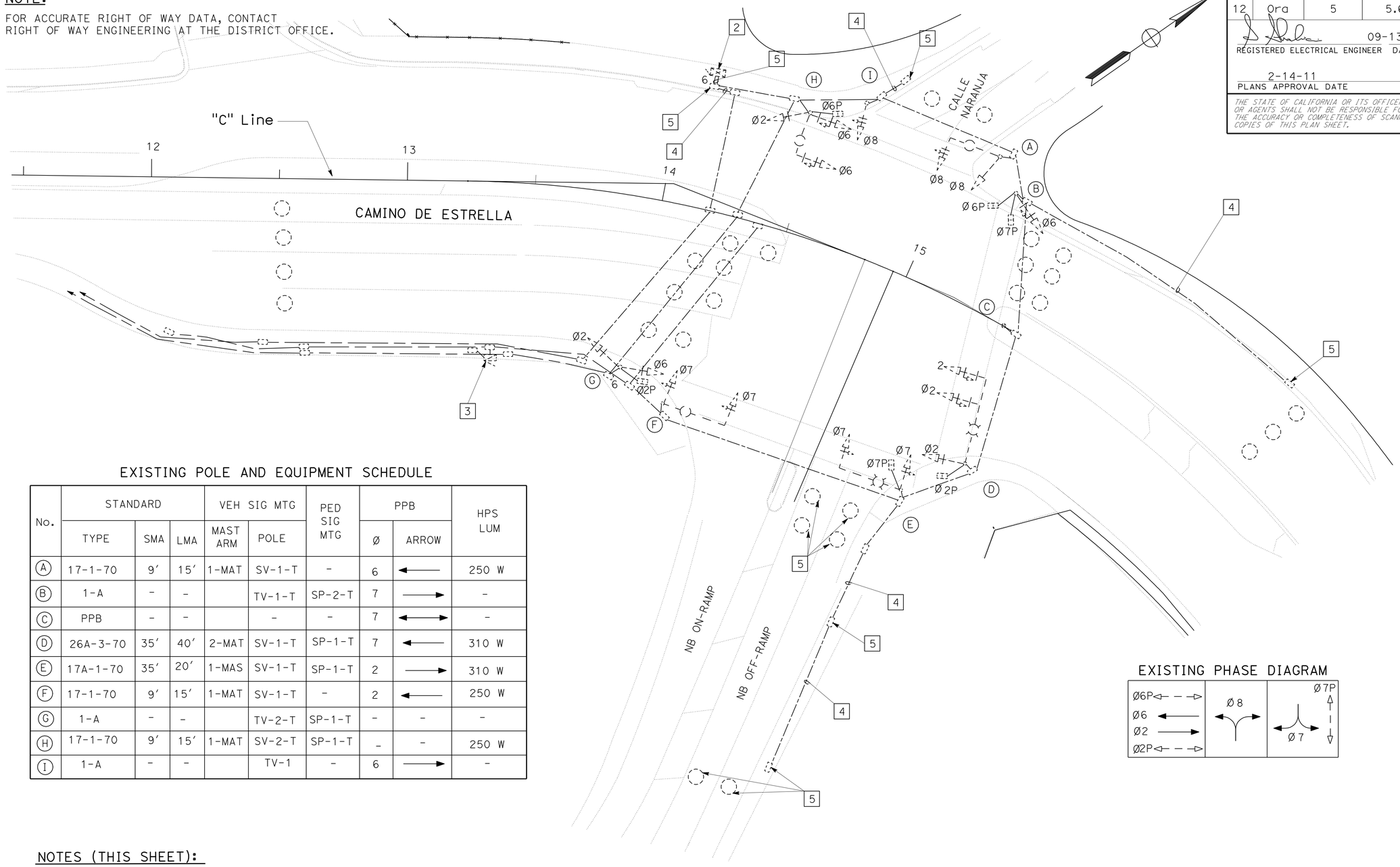

EXISTING POLE AND EQUIPMENT SCHEDULE

No.	STANDARD			VEH SIG MTG		PED SIG MTG	PPB		HPS LUM
	TYPE	SMA	LMA	MAST ARM	POLE		Ø	ARROW	
A	17-1-70	9′	15′	1-MAT	SV-1-T	-	6	←	250 W
B	1-A	-	-		TV-1-T	SP-2-T	7	→	-
C	PPB	-	-		-	-	7	↔	-
D	26A-3-70	35′	40′	2-MAT	SV-1-T	SP-1-T	7	←	310 W
E	17A-1-70	35′	20′	1-MAS	SV-1-T	SP-1-T	2	→	310 W
F	17-1-70	9′	15′	1-MAT	SV-1-T	-	2	←	250 W
G	1-A	-	-		TV-2-T	SP-1-T	-	-	-
H	17-1-70	9′	15′	1-MAT	SV-2-T	SP-1-T	-	-	250 W
I	1-A	-	-		TV-1	-	6	→	-

EXISTING PHASE DIAGRAM

NOTES (THIS SHEET):

1. NOT USED.

2 EXISTING MODEL 170 CONTROLLER IN MODEL 332 CABINET TO REMAIN IN PLACE.

3 RC EXISTING 120/240 V METERED SERVICE IN TYPE III-BF SERVICE EQUIPMENT ENCLOSURE.

4 PROTECT IN PLACE CONDUIT, REMOVE CONDUCTORS

5 PROTECT IN PLACE.

6. AB ALL EXISTING LOOP DETECTORS AND CONDUITS UNLESS OTHERWISE NOTED.

7. RC EXISTING SIGNAL STANDARDS, TRAFFIC AND PEDESTRIAN SIGNAL HEADS, LUMINAIRES, SIGNS AND PPB ATTACHED ON STANDARD, PULL BOXES UNLESS OTHERWISE NOTED.

THIS PLAN IS ACCURATE FOR ELECTRICAL WORK ONLY.

SIGNAL AND LIGHTING (LOCATION 2)

(REMOVE)

SCALE: 1" = 20′

E-8

STATE OF CALIFORNIA - DEPARTMENT OF TRANSPORTATION
Caltrans® ELECTRICAL DESIGN

FUNCTIONAL SUPERVISOR: SHAHRAM SHAHRIARI
CALCULATED-DESIGNED BY: SOUDABEH AFRASIABI
CHECKED BY: VANESSA TRUONG
REVISED BY
DATE REVISED

LAST REVISION 05-10-10
DATE PLOTTED => 18-FEB-2011
TIME PLOTTED => 09:52

Dist	COUNTY	ROUTE	POST MILES TOTAL PROJECT	SHEET No.	TOTAL SHEETS
12	Ora	5	5.6/6.6	82	154

REGISTERED ELECTRICAL ENGINEER 09-13-10 DATE

2-14-11
PLANS APPROVAL DATE

REGISTERED PROFESSIONAL ENGINEER S. SHAHRIARI No. E 13485 Exp. 9/30/12 ELECTRICAL STATE OF CALIFORNIA

THE STATE OF CALIFORNIA OR ITS OFFICERS OR AGENTS SHALL NOT BE RESPONSIBLE FOR THE ACCURACY OR COMPLETENESS OF SCANNED COPIES OF THIS PLAN SHEET.

NOTE:

FOR ACCURATE RIGHT OF WAY DATA, CONTACT RIGHT OF WAY ENGINEERING AT THE DISTRICT OFFICE.

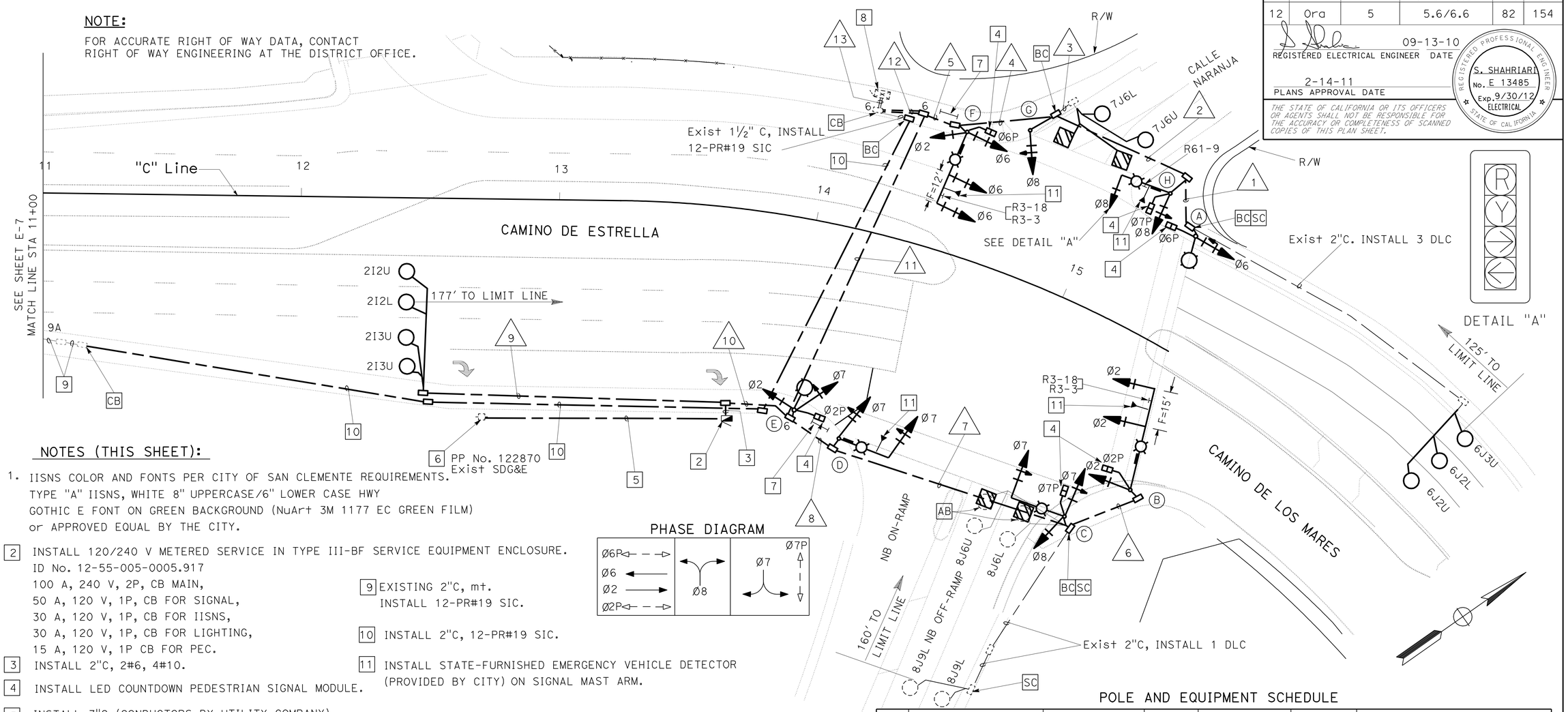

NOTES (THIS SHEET):

1. IISNS COLOR AND FONTS PER CITY OF SAN CLEMENTE REQUIREMENTS. TYPE "A" IISNS, WHITE 8" UPPERCASE/6" LOWER CASE HWY GOTHIC E FONT ON GREEN BACKGROUND (NuArt 3M 1177 EC GREEN FILM) or APPROVED EQUAL BY THE CITY.

2 INSTALL 120/240 V METERED SERVICE IN TYPE III-BF SERVICE EQUIPMENT ENCLOSURE.
ID No. 12-55-005-0005.917
100 A, 240 V, 2P, CB MAIN,
50 A, 120 V, 1P, CB FOR SIGNAL,
30 A, 120 V, 1P, CB FOR IISNS,
30 A, 120 V, 1P, CB FOR LIGHTING,
15 A, 120 V, 1P CB FOR PEC.

3 INSTALL 2"C, 2#6, 4#10.

4 INSTALL LED COUNTDOWN PEDESTRIAN SIGNAL MODULE.

5 INSTALL 3"C (CONDUCTORS BY UTILITY COMPANY).

6 INSTALL TYPE H SERVICE.

7 INSTALL TYPE-I PEDESTRIAN BARRICADE WITH TWO SIGNS OF R9-3A AND R9-3B BACK TO BACK.

8 EXISTING MODEL 170 CONTROLLER IN MODEL 332 CABINET WITH BATTERY BACK-UP SYSTEM.

9 EXISTING 2"C, mt. INSTALL 12-PR#19 SIC.

10 INSTALL 2"C, 12-PR#19 SIC.

11 INSTALL STATE-FURNISHED EMERGENCY VEHICLE DETECTOR (PROVIDED BY CITY) ON SIGNAL MAST ARM.

PHASE DIAGRAM

CONDUCTOR AND CONDUIT SCHEDULE

CONDUCTOR	CONDUCTOR RUN	1	2	3	4	5	6	7	8	9	10	11	12	13
12CSC	VEHICLE SIGNALS	1	2	-	3	5	1	2	3	-	-	5	10	10
3CSC	PPB	1	2	-	3	3	1	2	3	-	-	3	6	6
#6	SERVICE	-	-	-	-	-	-	-	-	-	2	2	2	2
#10	LUMINAIRE	2	2	-	2	2	2	2	2	-	2	2	-	-
	IISNS	-	2	-	2	2	2	2	2	-	2	2	-	-
DLC	Ø2 DETECTOR	-	-	-	-	-	-	-	-	3	3	3	3	3
	Ø6 DETECTOR	3	3	-	3	3	-	-	-	-	-	-	3	3
	Ø7 DETECTOR	-	-	4	4	4	-	-	-	-	-	-	4	4
	Ø8 DETECTOR	-	-	-	-	-	-	3	3	-	-	3	3	3
12-PR#19 SIC		-	-	-	-	-	-	-	-	-	-	-	-	1
*EVC		-	1	-	1	2	1	1	2	-	-	2	4	4
CONDUIT SIZE		2-1/2"	3"	2"(E)	4"	4"	2-1/2"	3"	4"	1-1/2"	2"	4"	2-4"	2-3"(E)

ALL CONDUCTORS AND CONDUITS ARE NEW UNLESS OTHERWISE NOTED
(E) = EXISTING (*) = STATE-FURNISHED (PROVIDED BY CITY)

POLE AND EQUIPMENT SCHEDULE

No.	STANDARD			VEH SIG MTG		PED SIG	PPB		HPS LUM	IISNS
	TYPE	SMA	LMA	MAST ARM	POLE	MTG	Ø	ARROW		
A	15TS	-	12'	-	SV-1-T	SP-1-T	Ø 7	→	200 W	-
B	26-4-100	40'	12'	2-MAS	SV-1-T	SP-1-T	Ø7	←	200 W	I-5 North →
C	17-2-100	20'	12'	MAS	SV-2-TA	SP-1-T	Ø2	→	200 W	-
D	17-2-100	20'	12'	MAS	SV-1-T	-	Ø2	←	200 W	Camino De Estrella → ; ← Camino de Los Mares
E	15TS	-	12'	-	SV-2-TA	SP-1-T	-	-	200 W	-
F	19-4-100	30'	12'	2-MAS	SV-1-T SV-T-T	SP-1-T	-	-	200 W	← I-5 North
G	1-A	-	-	-	TV-1-T	-	Ø6	→	-	-
H	19-4-100	20'	12'	MAS	SV-1-T	SP-1-T	Ø6	←	200 W	← Camino De Estrella ; Camino de Los Mares →

THIS PLAN IS ACCURATE FOR ELECTRICAL WORK ONLY.

SIGNAL AND LIGHTING (LOCATION 2)

SCALE: 1" = 20'

E-9

STATE OF CALIFORNIA - DEPARTMENT OF TRANSPORTATION
Caltrans ELECTRICAL DESIGN

FUNCTIONAL SUPERVISOR: SHAHRAM SHAHRIARI
CALCULATED-DESIGNED BY: SOUDABEH AFRASIABI
CHECKED BY: VANESSA TRUONG
REVISED BY / DATE REVISED

LAST REVISION 05-11-10
DATE PLOTTED => 18-FEB-2011
TIME PLOTTED => 10:15

Dist	COUNTY	ROUTE	POST MILES TOTAL PROJECT	SHEET No.	TOTAL SHEETS
12	Ora	5	5.6/6.6	83	154

REGISTERED ELECTRICAL ENGINEER 09-13-10 DATE

2-14-11
PLANS APPROVAL DATE

REGISTERED PROFESSIONAL ENGINEER
S. SHAHRIARI
No. E 13485
Exp. 9/30/12
ELECTRICAL
STATE OF CALIFORNIA

THE STATE OF CALIFORNIA OR ITS OFFICERS OR AGENTS SHALL NOT BE RESPONSIBLE FOR THE ACCURACY OR COMPLETENESS OF SCANNED COPIES OF THIS PLAN SHEET.

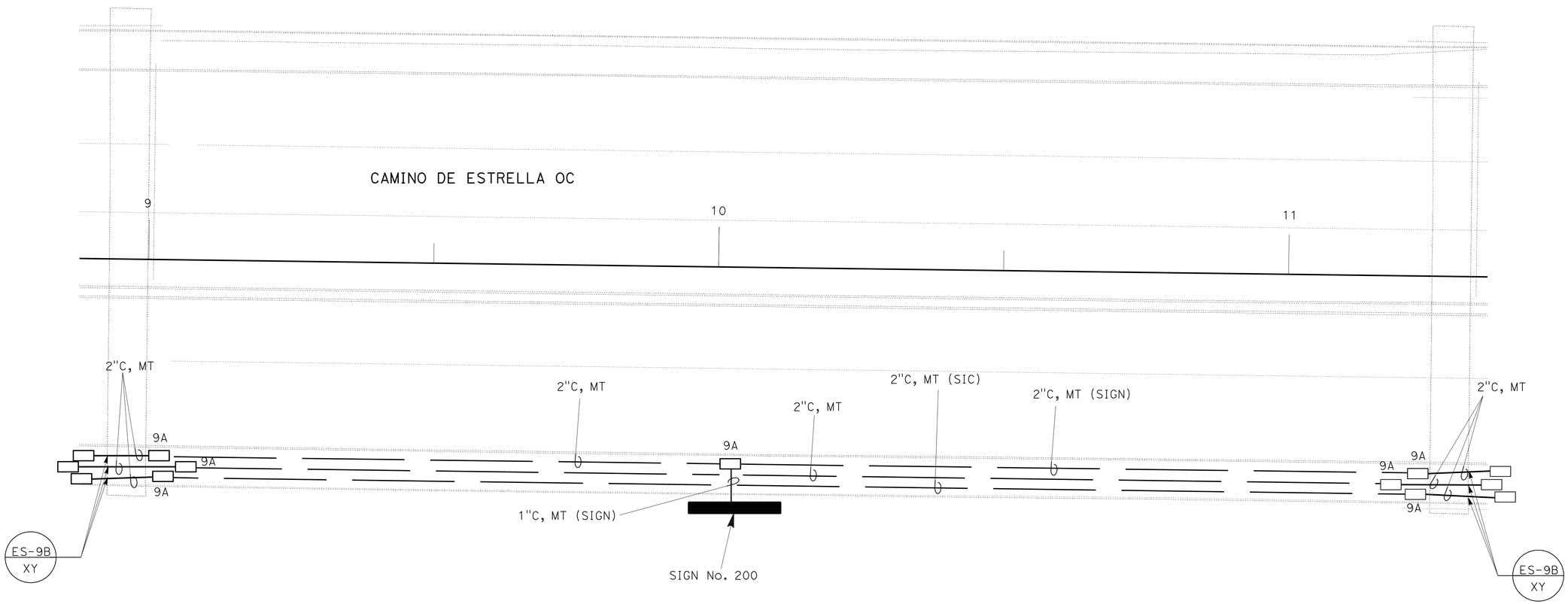

COMMUNICATION CONDUIT (BRIDGE)

SCALE: 1" = 10'

THIS PLAN IS ACCURATE FOR ELECTRICAL WORK ONLY.

E-10

STATE OF CALIFORNIA - DEPARTMENT OF TRANSPORTATION
Caltrans® **ELECTRICAL DESIGN**

FUNCTIONAL SUPERVISOR: SHAHRAM SHAHRIARI
CALCULATED-DESIGNED BY: SOUDABEH AFRASIABI
CHECKED BY: VANESSA TRUONG
REVISED BY
DATE REVISED

LAST REVISION 05-11-10
DATE PLOTTED => 17-FEB-2011
TIME PLOTTED => 09:13

Dist	COUNTY	ROUTE	POST MILES TOTAL PROJECT	SHEET No.	TOTAL SHEETS
12	Ora	5	5.6/6.6	84	154

Mina Zolfaghari 09-13-10
REGISTERED ELECTRICAL ENGINEER DATE

2-14-11
PLANS APPROVAL DATE

REGISTERED PROFESSIONAL ENGINEER MINA ZOLFAGHARI No. E 16816 Exp. 12/31/10 ELECTRICAL STATE OF CALIFORNIA

THE STATE OF CALIFORNIA OR ITS OFFICERS OR AGENTS SHALL NOT BE RESPONSIBLE FOR THE ACCURACY OR COMPLETENESS OF SCANNED COPIES OF THIS PLAN SHEET.

CONDUCTOR AND CONDUIT SCHEDULE

AWG OR CABLE	POLE OR CIRCUIT	CONDUCTOR RUN 1	2	3	4	5	6	7	8	9	10
#14	Ø1	3	3	3	3	3	3	3	3	3	3
	Ø2								3	3	3
	Ø4		3	3	3	3	3	3		3	3
	Ø5				3	3	3	3		3	3
	Ø6	3	3	3	3	3	3	3		3	3
	Ø8		3	3	3	3	3	3	3	3	3
	Ø2P								2	2	2
	Ø6P	2	2	2	2	2	2	2		2	2
	Ø8P		2	2	2	2	2	2	2	2	2
	Ø2PPB								1	1	1
	Ø6PPB		1	1	1	1	1	1		1	1
	Ø8PPB	1	1	1	1	1	1	1	1	1	1
	PPB COMMON	1	1	1	1	1	1	1	1	2	2
	SPARE	3	3	3	3	3	3	3	3	3	3
	TOTAL	13	22	22	25	25	25	25	19	32	32
#14	IISNS	2	2	2	2	2	2	2	2	2	
#10	LUMINAIRES	2	2	2	2	2	2	2	2	2	
	SIGNAL COMMON	1	1	1	1	1	1	1	1	2	2
#6	SERVICE										2
2#12 DLC	Ø1						2	2		2	2
	Ø2								3	3	3
	Ø4									2	2
	Ø5								2	2	2
	Ø6					3	3	3		3	3
	Ø8		2	2	2	2	2	2		2	2
	TOTAL		2	2	2	5	7	7	5	14	14
EVC *		1	1	1	1	1	1	1	1	3	3
12-PR#19 SIC											2
CONDUIT SIZE		2"(E)	3"(E)	2"(E)	2"(E)	3"(E)	3"(E)	3"	3"	3½"	2-3½"

REMOVE ALL EXISTING CONDUCTORS AND INSTALL NEW CONDUCTORS
* = STATE-FURNISHED (PROVIDED BY CITY)
(E) = EXISTING

PROJECT NOTES (THIS SHEET ONLY):

1. THE CONTRACTOR SHALL DOCUMENT ALL EXISTING CONNECTIONS OF EXISTING EQUIPMENT BEFORE RELOCATION.
2. ALL SALVAGED MATERIALS SHALL BE DELIVERED TO THE CITY YARD NOTED ON SPECIAL PROVISION.

3 TO CONTROLLER CABINET LOCATED AT NE OF CAMINO MIRA COSTA

4 RELOCATE MULTISONIC 820 A (8 PHASE) CONTROLLER AND ALL EXISTING EQUIPMENT IN THE RELOCATED TYPE P SYSTEM CONTROLLER CABINET COMPLETELY. SEE SHEET E-12 FOR FOUNDATION DETAIL.

5 RC EXISTING 120/240 V TYPE II-BF SERVICE EQUIPMENT ENCLOSURE.

6 INSTALL 120/240 V METERED SERVICE IN TYPE III-BF EQUIPMENT ENCLOSURE WITH TYPE V PEC.
100 A, 240 V, 2P, CB MAIN
50 A, 120 V, 1P, CB SIGNAL
20 A, 120 V, 1P, CB IISNS
30 A, 120 V, 1P, CB LIGHTING (UNMETERED)
15 A, 120 V, 1P, CB PEC FOR LIGHTING

7 INSTALL CONDUIT SIZE PER UTILITY REQUIREMENTS. (CONDUCTORS BY UTILITY COMPANY)

8 Exist 1½"C, REMOVE EXISTING 12-PAIR#19 SIC AND INSTALL 350 FT 12-PR#19 SIC TO THE NEXT CONTROLLER

9 RS TYPE 26-4-80 POLE. RL iisns.

10 RS TYPE 17-3-80 POLE. RL iisns.

11 RL EXISTING PPB TO 3'-4" HEIGHT.

12 INSTALL STATE-FURNISHED EMERGENCY VEHICLE DETECTOR (PROVIDED BY CITY) ON SIGNAL MAST ARM

13. EACH TYPE D LOOP DETECTORS SHALL HAVE ITS OWN DLC.

14 INSTALL TYPE-I PEDESTRIAN BARRICADE WITH TWO SIGNS OF R9-3A AND R9-3B BACK TO BACK.

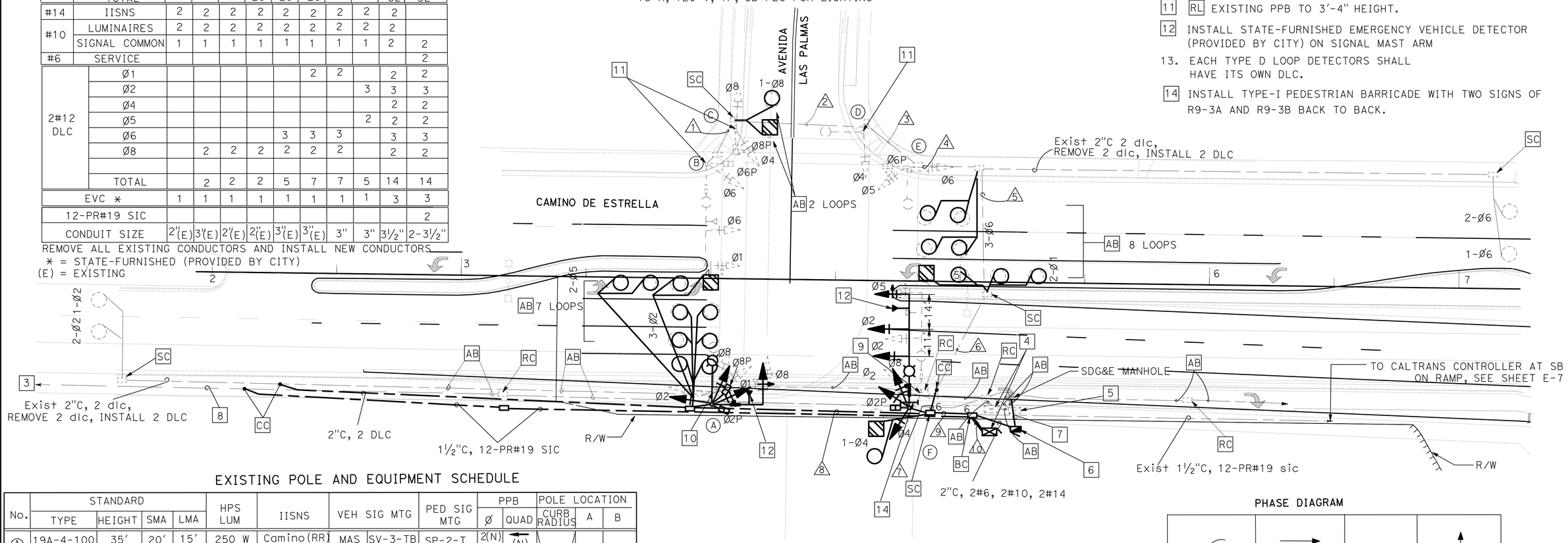

EXISTING POLE AND EQUIPMENT SCHEDULE

No.	STANDARD TYPE	HEIGHT	SMA	LMA	HPS LUM	IISNS	VEH SIG MTG	PED SIG MTG	PPB Ø	PPB QUAD	POLE LOCATION CURB RADIUS	A	B
Ⓐ	19A-4-100 (N)	35' (N)	20' (N)	15' (N)	250 W (N)	Camino(RR) De Estrella	MAS (N)	SV-3-TB (N)	SP-2-T (N)	2(N) 8(N) (N)			
Ⓑ	26-4-80	30'	40'	12'	250 W	Avenida Las Palmas	2-MAS	SV-1-T	SP-1-CS	8	←		5'
Ⓒ	1-A	10'						TV-2-TB	SP-1-CS	6	→	3'	
Ⓓ	15	30'		12'	250 W			SV-1-T		6	←	2'	
Ⓔ	15	30'		12'	250 W			SV-2-TB	SP-1-CS				5'
Ⓕ	26A-4-100 (N)	35' (N)	45' (N)	15' (N)	250 W (N)	Avenida(RR) Las Palmas	3-MAS (N)	SV-3-TB (N)	SP-1-T (N)	2 (N)	→ (N)		

(N) = NEW
(RR) = RELOCATE AND REUSE ON NEW POLE

PHASE DIAGRAM

Ø1	Ø2	Ø3 NOT USED	Ø4
Ø5	Ø6	Ø7 NOT USED	Ø8

NOTE:

FOR ACCURATE RIGHT OF WAY DATA, CONTACT RIGHT OF WAY ENGINEERING AT THE DISTRICT OFFICE.

THIS PLAN IS ACCURATE FOR ELECTRICAL WORK ONLY.

SIGNAL AND LIGHTING (CITY)

SCALE: 1" = 20'

E-11

MZ	04-12-10
REVISED BY	DATE REVISED
MINA ZOLFAGHARI	VANESSA TRUONG
CALCULATED-DESIGNED BY	CHECKED BY
FUNCTIONAL SUPERVISOR	SHAHRAM SHAHRIARI

STATE OF CALIFORNIA - DEPARTMENT OF TRANSPORTATION
Caltrans ELECTRICAL DESIGN

LAST REVISION 04-12-10 | DATE PLOTTED => 17-FEB-2011 | TIME PLOTTED => 09:13

Dist	COUNTY	ROUTE	POST MILES TOTAL PROJECT	SHEET No.	TOTAL SHEETS
12	Ora	5	5.6/6.6	85	154

Mina Zolfaghari 09-13-10
REGISTERED ELECTRICAL ENGINEER DATE

2-14-11
PLANS APPROVAL DATE

REGISTERED PROFESSIONAL ENGINEER
MINA ZOLFAGHARI
No. E 16816
Exp. 12/31/10
ELECTRICAL
STATE OF CALIFORNIA

THE STATE OF CALIFORNIA OR ITS OFFICERS OR AGENTS SHALL NOT BE RESPONSIBLE FOR THE ACCURACY OR COMPLETENESS OF SCANNED COPIES OF THIS PLAN SHEET.

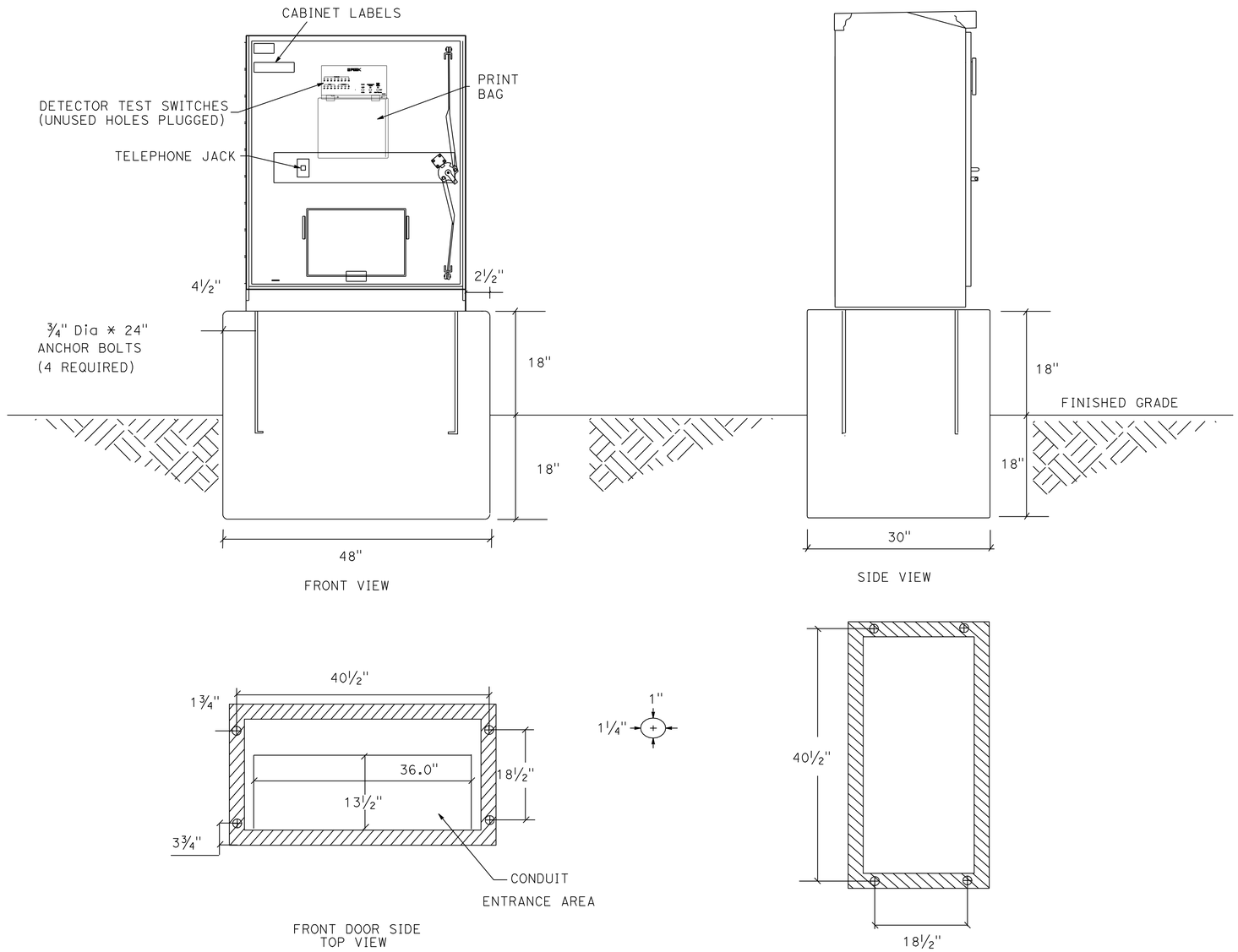

SIGNAL AND LIGHTING (CITY CABINET FOUNDATION DETAIL)

NO SCALE

E-12

THIS PLAN IS ACCURATE FOR ELECTRICAL WORK ONLY.

REVISED BY	MZ
DATE REVISED	04-12-10
CALCULATED-DESIGNED BY	MINA ZOLFAGHARI
CHECKED BY	VANESSA TRUONG
FUNCTIONAL SUPERVISOR	SHAHRAM SHAHRIARI

STATE OF CALIFORNIA - DEPARTMENT OF TRANSPORTATION
Caltrans
ELECTRICAL DESIGN

LAST REVISION 04-12-10 | DATE PLOTTED => 17-FEB-2011 | TIME PLOTTED => 09:13

DIST	COUNTY	ROUTE	POST MILES TOTAL PROJECT	SHEET NO.	TOTAL SHEETS
12	Ora	5	5.6/6.6	86	154

REGISTERED CIVIL ENGINEER

June 6, 2008
PLANS APPROVAL DATE

REGISTERED PROFESSIONAL ENGINEER
Donald E. Howe
No. C46402
Exp. 3-31-09
CIVIL
STATE OF CALIFORNIA

The State of California or its officers or agents shall not be responsible for the accuracy or completeness of electronic copies of this plan sheet.

To accompany plans dated 2-14-11

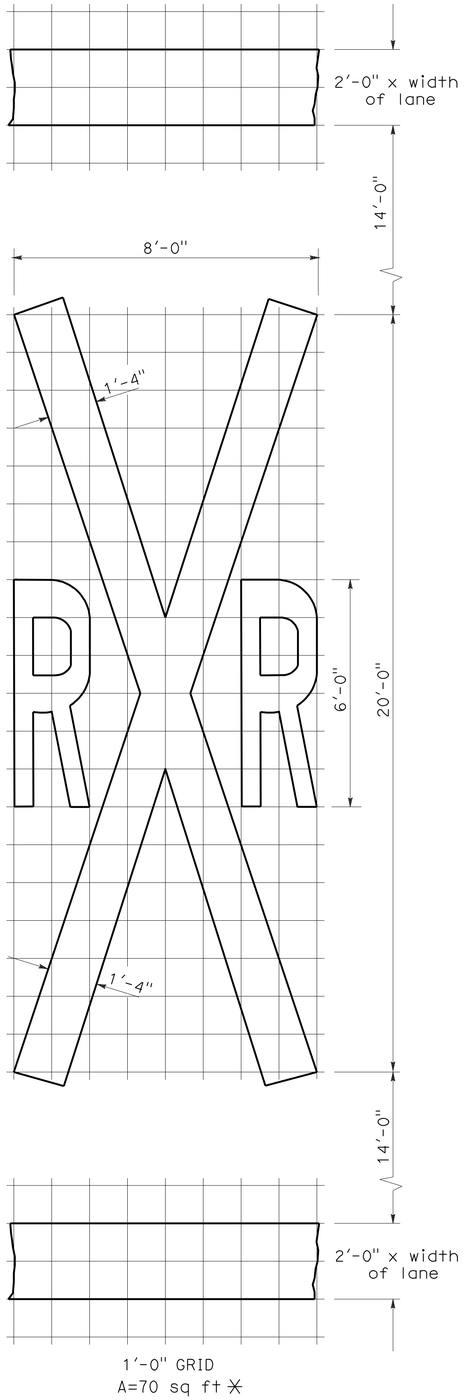

RAILROAD CROSSING SYMBOL

✳70 sq ft DOES NOT INCLUDE THE 2'-0" x VARIABLE WIDTH TRANSVERSE LINES.

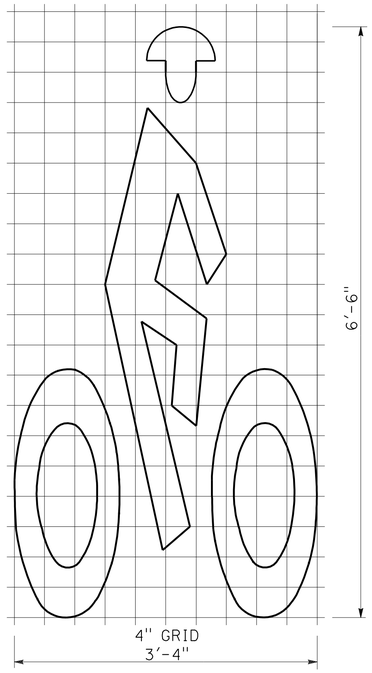

BIKE LANE SYMBOL

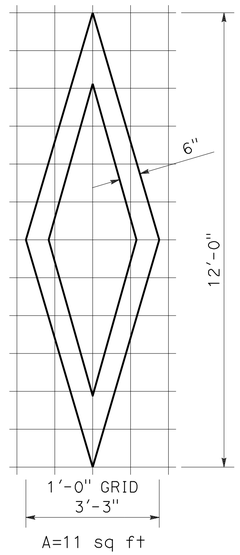

DIAMOND SYMBOL

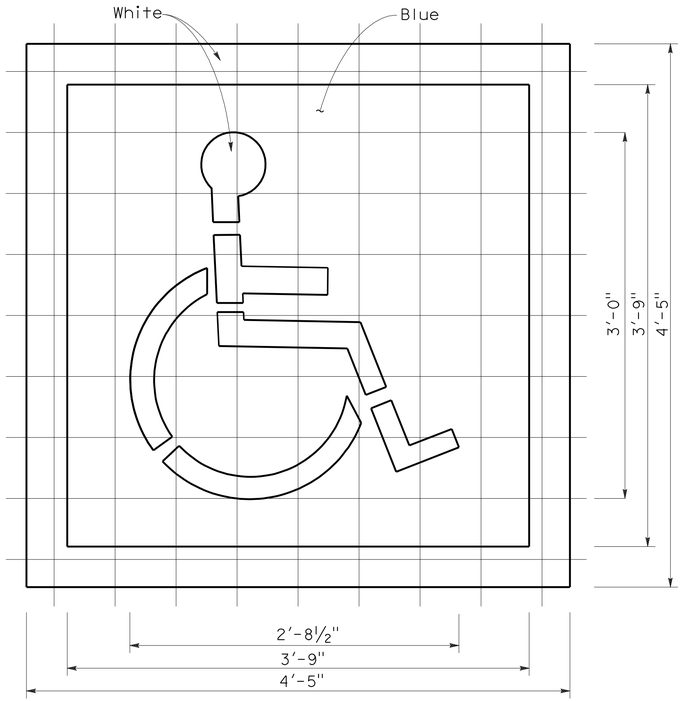

INTERNATIONAL SYMBOL OF ACCESSIBILITY MARKING

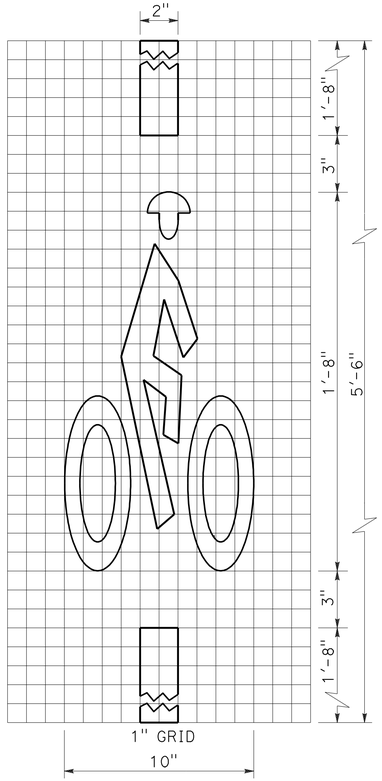

BICYCLE LOOP DETECTOR SYMBOL

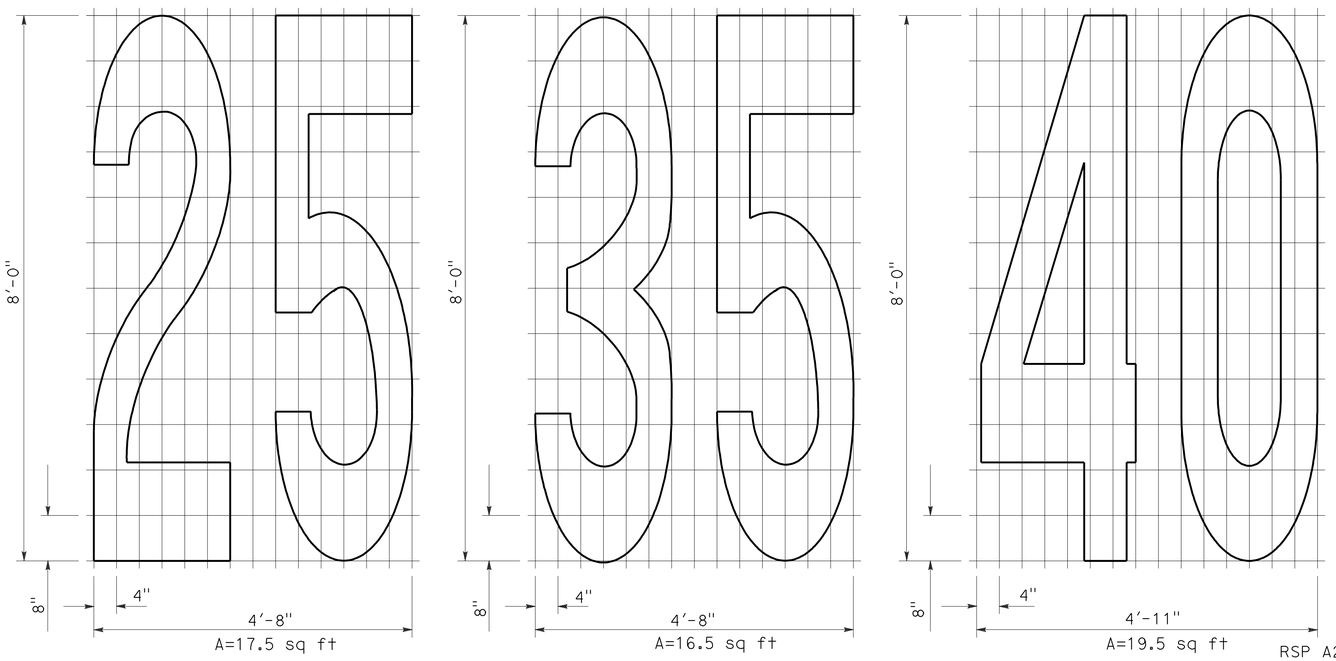

NUMERALS

NOTE:

1. Minor variations in dimensions may be accepted by the Engineer.

STATE OF CALIFORNIA
DEPARTMENT OF TRANSPORTATION

PAVEMENT MARKINGS SYMBOLS AND NUMERALS

NO SCALE

RSP A24C DATED JUNE 6, 2008 SUPERSEDES STANDARD PLAN A24C DATED MAY 1, 2006 - PAGE 11 OF THE STANDARD PLANS BOOK DATED MAY 2006.

REVISED STANDARD PLAN RSP A24C

2006 REVISED STANDARD PLAN RSP A24C

5-27-08

DIST	COUNTY	ROUTE	POST MILES TOTAL PROJECT	SHEET NO.	TOTAL SHEETS
12	Ora	5	5.6/6.6	87	154

REGISTERED CIVIL ENGINEER

November 17, 2006
PLANS APPROVAL DATE

REGISTERED PROFESSIONAL ENGINEER Dallas Forester No. C37765 Exp. 12-31-06 CIVIL STATE OF CALIFORNIA

The State of California or its officers or agents shall not be responsible for the accuracy or completeness of electronic copies of this plan sheet.

To accompany plans dated 2-14-11

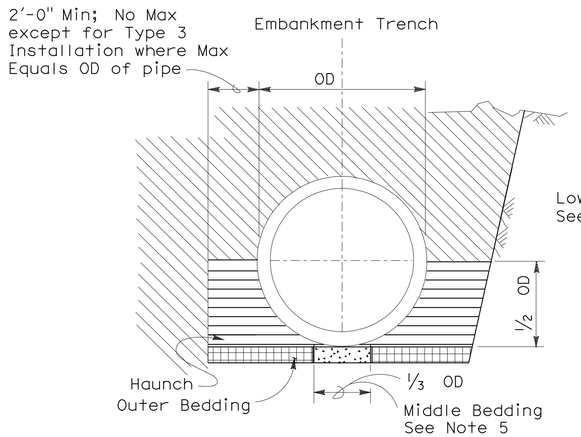

BACKFILL

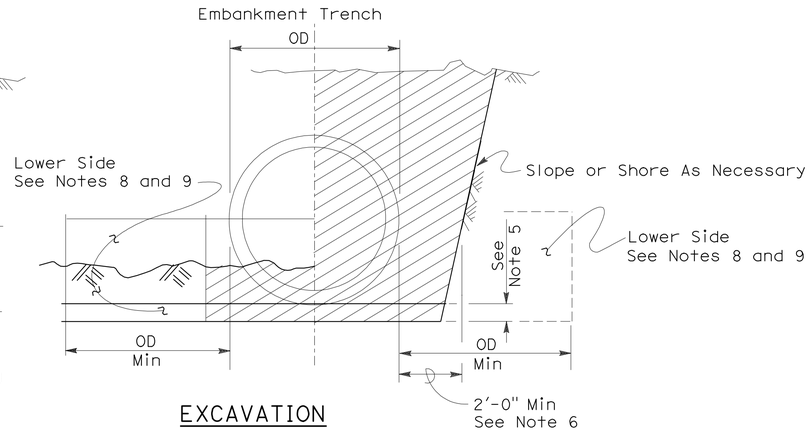

EXCAVATION

Roadway Embankment

Structure Backfill (Culvert) See Note 6

Structure Backfill (Culvert) See Note 6

Loose Backfill

Excavation Structure (Culvert)

TYPE 1 INSTALLATION:

The haunch and outer bedding shall be compacted to a minimum 90 percent relative compaction. In addition, the minimum sand equivalent in these areas shall be 30 and the maximum percentage passing the 75 μm sieve size shall be 12.

TYPE 2 INSTALLATION:

The haunch and outer bedding shall be compacted to a minimum 90 percent relative compaction. In addition, the minimum sand equivalent in these areas shall be 25.

TYPE 3 INSTALLATION:

The haunch and outer bedding shall be compacted to a minimum 85 percent relative compaction. 90 percent relative compaction will be required where the fill over the pipe is less than 4'-0" or 1/2 OD.

NOTES:

1. Unless otherwise shown on the plans or specified in the special provision, the Contractor shall have the option of selecting the class of RCP and the type of installation to be used, provided the height of cover does not exceed the value shown for the RCP selected.
   Example: 24" RCP culvert with maximum cover of 19'-0" the options are:
   a) Class III or stronger with Installation Type 1.
   b) Class III Special or stronger with Installation Type 2.
   c) Class IV Special or stronger with Installation Type 3.
   Cover is defined as the maximum vertical distance from top of the pipe to finished grade within the length of any given culvert.
2. The class of RCP and Installation Type selected shall be the same throughout the length of any given culvert.
3. The "length of any culvert" is defined as the culvert between:
   a) Successive drainage structure (inlets, junction boxes, headwalls, etc.).
   b) A drainage structure and the inlet or outlet end of the culvert.
   c) The inlet and outlet end of the culvert when there are no intervening drainage structures.
4. Oval and arch shaped RCP shall not be used.
5. 1/25 OD Min, not less than 3".
6. Slurry cement backfill may be substituted for backfill in the outer bedding and haunch areas. If slurry is used the outer and middle beddings shall be omitted. Prior to installation the soil under the middle 1/3 of the outside diameter of the pipe shall be softened by scarifying or other means to a minimum depth of 1/25 OD, but not less than 3". Where slurry cement backfill is used clear distance to trench wall may be reduced as set forth in Section 19-3.062 of the Standard Specifications.
7. Backfill shall be placed full width of excavation except where dimensions are shown for backfill width or thickness. Dimensions shown are minimums.
8. Lower side shall be suitable material as determined by the Engineer. Otherwise it shall be considered unsuitable as set forth in Section 19-2.02 of the Standard Specifications. See Note 9.
9. Where the pipe is placed in a trench, if the trench walls are sloped at 5 vertical to 1 horizontal or steeper for at least 90 percent of the trench height or up to not less than 12" from the grading plane, the firmness of the soil in the lower side need not be considered.
10. Non-reinforced precast concrete pipe sizes 3'-0" or smaller may be placed under installation Types 1, 2 or 3.

INSTALLATION TYPE 1

MINIMUM CLASS AND D-LOAD	COVER	
	108" Dia AND SMALLER	OVER 108" Dia
Class II 1000D	14.9'	12.9'
Class III 1350D	15.0' - 20.9'	13.0' - 18.9'
Class III Special 1700D	21.0' - 26.9'	19.0' - 24.9'
Class IV 2000D	27.0' - 31.9'	25.0' - 29.9'
Class IV Special 2500D	32.0' - 40.9'	30.0' - 38.9'
Class V 3000D	41.0' - 49.9'	39.0' - 46.9'
Class V Special 3600D	50.0' - 59.0'	47.0' - 58.0'

INSTALLATION TYPE 2

MINIMUM CLASS AND D-LOAD	COVER
Class II 1000D	9.9'
Class III 1350D	10.0'- 14.9'
Class III Special 1700D	15.0' - 19.9'
Class IV 2000D	20.0' - 24.9'
Class IV Special 2500D	25.0' - 31.9'
Class V 3000D	32.0' - 38.9'
Class V Special 3600D	39.0' - 47.0'

INSTALLATION TYPE 3

MINIMUM CLASS AND D-LOAD	COVER	
	48" Dia AND SMALLER	OVER 48" Dia
Class II 1000D	7.9'	5.9'
Class III 1350D	8.0' - 10.9'	6.0' - 8.9'
Class III Special 1700D	11.0' - 14.9'	9.0' - 12.9'
Class IV 2000D	15.0' - 17.9'	13.0' - 15.9'
Class IV Special 2500D	18.0' - 21.9'	16.0' - 19.9'
Class V 3000D	22.0' - 26.9'	20.0' - 24.9'
Class V Special 3600D	30.0' - 33.0'	25.0' - 31.0'

STATE OF CALIFORNIA
DEPARTMENT OF TRANSPORTATION

EXCAVATION AND BACKFILL CONCRETE PIPE CULVERTS

NO SCALE

RSP A62DA DATED NOVEMBER 17, 2006 SUPERSEDES STANDARD PLAN A62DA DATED MAY 1, 2006 - PAGE 20 OF THE STANDARD PLANS BOOK DATED MAY 2006.

REVISED STANDARD PLAN RSP A62DA

2006 REVISED STANDARD PLAN RSP A62DA

10-26-06

DIST	COUNTY	ROUTE	POST MILES TOTAL PROJECT	SHEET NO.	TOTAL SHEETS
12	Ora	5	5.6/6.6	88	154

Randell D. Hiatt
REGISTERED CIVIL ENGINEER

June 6, 2008
PLANS APPROVAL DATE

REGISTERED PROFESSIONAL ENGINEER
Randell D. Hiatt
No. C50200
Exp. 6-30-09
CIVIL
STATE OF CALIFORNIA

The State of California or its officers or agents shall not be responsible for the accuracy or completeness of electronic copies of this plan sheet.

To accompany plans dated 2-14-11

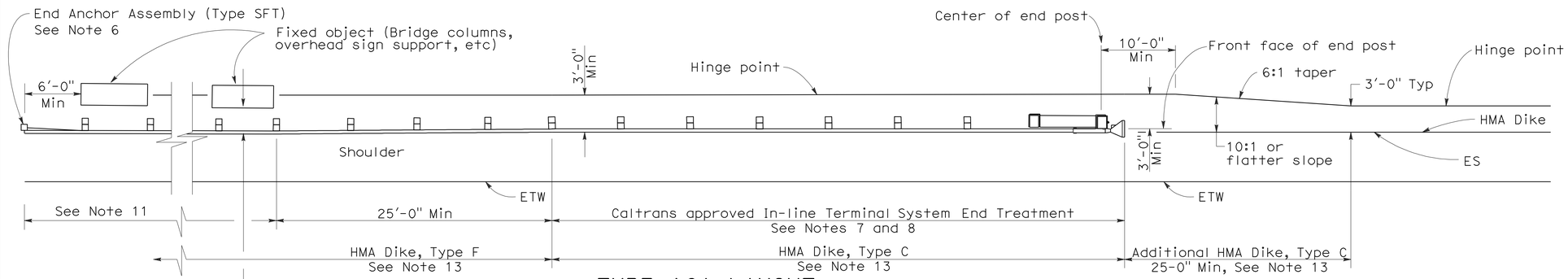

TYPE 16A LAYOUT

(GUARD RAILING INSTALLATION AT ROADSIDE FIXED OBJECT OR OBJECTS WITH AN IN-LINE END TREATMENT AT TRAFFIC APPROACH END OF RAILING)
See Notes 12 and 13

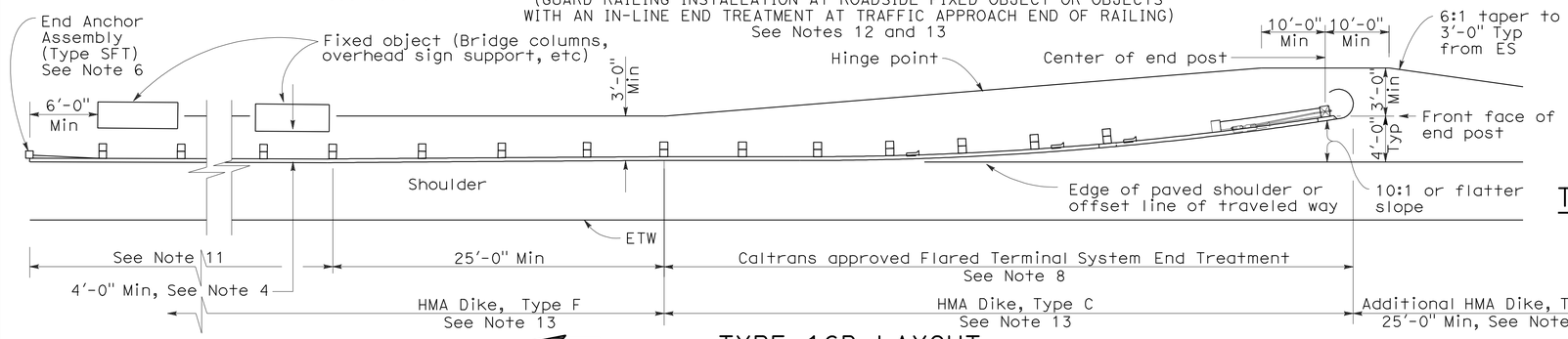

TYPE 16B LAYOUT

(GUARD RAILING INSTALLATION AT ROADSIDE FIXED OBJECT OR OBJECTS WITH A FLARED END TREATMENT AT TRAFFIC APPROACH END OF RAILING)
See Notes 12 and 13

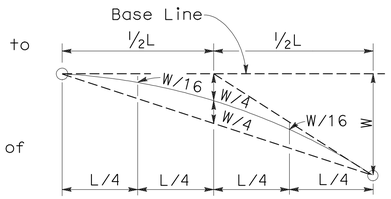

TYPICAL PARABOLIC LAYOUT

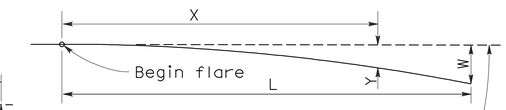

Base Line (Edge of paved shoulder or offset line of edge of traveled way)

$$Y = \frac{WX^2}{L^2}$$

Y = Offset from base line
W = Maximum offset
X = Distance along base line
L = Length of flare

PARABOLIC FLARE OFFSETS

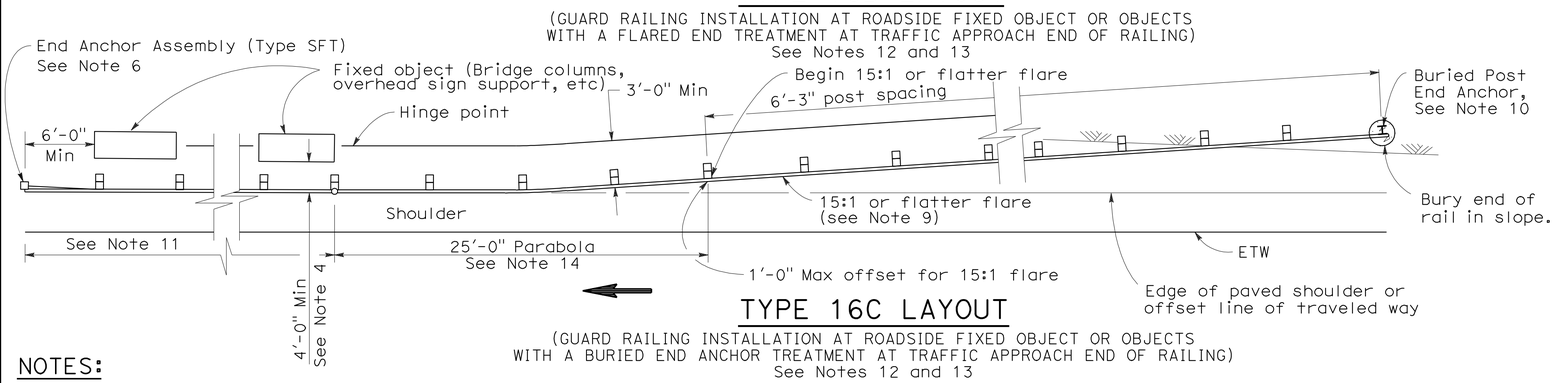

TYPE 16C LAYOUT

(GUARD RAILING INSTALLATION AT ROADSIDE FIXED OBJECT OR OBJECTS WITH A BURIED END ANCHOR TREATMENT AT TRAFFIC APPROACH END OF RAILING)
See Notes 12 and 13

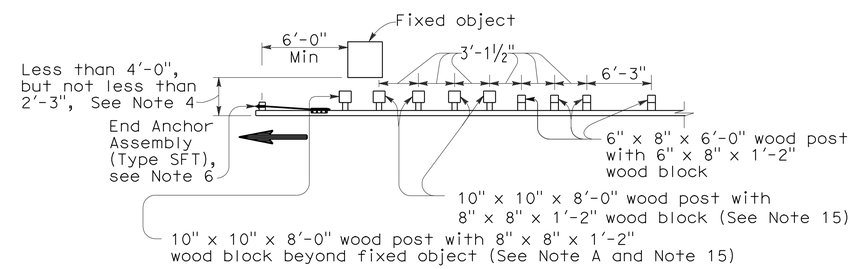

NOTE A: For a series of fixed objects (bridge columns, overhead sign supports, etc.) additional 10" x 10" x 8'-0" wood post with 8" x 8" x 1'-2" wood blocks at 3'-1½" center to center spacing are to be used between fixed objects.

STRENGTHENED RAILING SECTIONS FOR FIXED OBJECT

Use strengthened railing sections with Types 16A, 16B or 16C Layouts where minimum clearance between the face of the guard railing and fixed object(s) is less than 4'-0", but not less than 2'-3". See Note 4

NOTES:

1. Line post, blocks and hardware to be used are shown on Revised Standard Plans A77A1, A77A2, A77B1, A77C1 and A77C2.
2. Guard railing post spacing to be 6'-3" center to center, except as otherwise noted.
3. Except as noted, line posts are 6" x 8" x 6'-0" wood with 6" x 8" x 1'-2" wood blocks. W6 x 9 steel posts, 6'-0" in length, with 6" x 8" x 1'-2" notched wood blocks or notched recycled plastic blocks may be used for 6" x 8" x 6'-0" wood line posts with 6" x 8" x 1'-2" wood blocks where applicable and when specified.
4. A 4'-0" minimum clearance is required between the face of the railing and the face of a fixed object located directly behind standard guard railing sections with post spacing of 6'-3". Construct guard railing as shown in the detail "Strengthened Railing Sections for Fixed Objects" on this plan, where the clearance between the face of the railing and the face of a fixed object is less than 4'-0", but not less than 2'-3". Where the clearance is less than 2'-3", a concrete wall or barrier should be constructed to shield the fixed object(s).
5. Direction of adjacent traffic indicated by ⟶.
6. For End Anchor Assembly (Type SFT) details, see Standard Plan A77H1.
7. In-line Terminal System End Treatments are used where site conditions will not accommodate a flared end treatment.
8. The type of terminal system to be used will be shown on the Project Plans.
9. The 15:1 or flatter flare used with Type 16C Layout is based on the edge of the paved shoulder or offset line of edge of the traveled way. The length of guard railing within the 15:1 or flatter flare is based on site conditions and should be a length equal to multiples of 12'-6".
10. For details of the Buried Post End Anchor used with Type 16C Layout, see Standard Plan A77I2.
11. As site conditions dictate, construct additional guard railing to shield fixed object(s). Additional guard railing length equal to multiples of 12'-6". Post spacing at 6'-3" except as specified in Note 4.
12. Layout Types 16A, 16B or 16C are typically used where guard railing is recommended to shield roadside fixed object(s) and a crashworthy end treatment is required for only one direction of traffic.
13. Where placement of dike is required with guard railing, see Revised Standard Plan RSP A77C4 for dike positioning details.
14. For typical flare offsets for 25'-0" length parabola with maximum offset of 1'-0", see Revised Standard Plan RSP A77E1.
15. W6 x 15 steel post, 8'-0" in length, with 8" x 8" x 1'-2" notched wood block or notched recycled plastic blocks may be used in place of the 10" x 10" x 8'-0" wood post with 8" x 8" x 1'-2" wood block shown in the "Strengthened Railing Sections Detail".

STATE OF CALIFORNIA
DEPARTMENT OF TRANSPORTATION

METAL BEAM GUARD RAILING TYPICAL LAYOUTS FOR ROADSIDE FIXED OBJECTS

NO SCALE

RSP A77G3 DATED JUNE 6, 2008 SUPERSEDES STANDARD PLAN A77G3 DATED MAY 1, 2006 - PAGE 61 OF THE STANDARD PLANS BOOK DATED MAY 2006.

REVISED STANDARD PLAN RSP A77G3

2006 REVISED STANDARD PLAN RSP A77G3

12-10-07

DIST	COUNTY	ROUTE	POST MILES TOTAL PROJECT	SHEET NO.	TOTAL SHEETS
12	Ora	5	5.6/6.6	89	154

REGISTERED CIVIL ENGINEER

June 5, 2009
PLANS APPROVAL DATE

REGISTERED PROFESSIONAL ENGINEER Glenn DeCou No. C34547 Exp. 9-30-09 CIVIL STATE OF CALIFORNIA

The State of California or its officers or agents shall not be responsible for the accuracy or completeness of electronic copies of this plan sheet.

To accompany plans dated 2-14-11

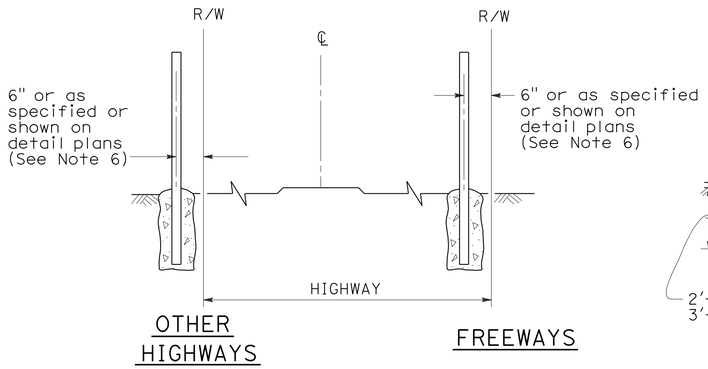

FENCE LOCATION

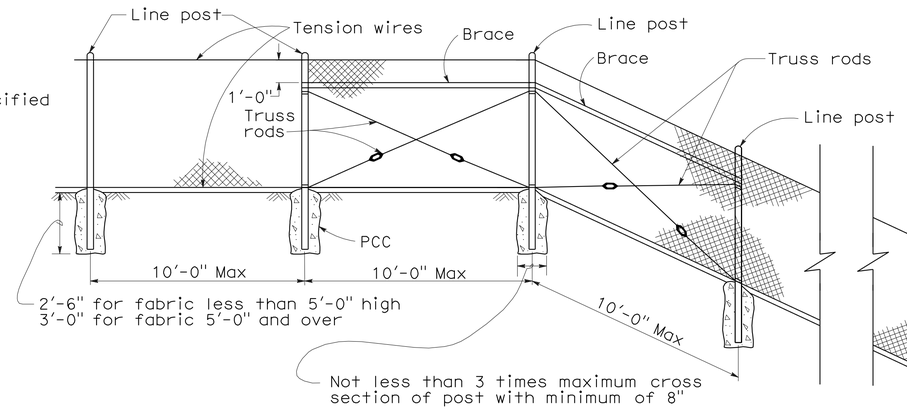

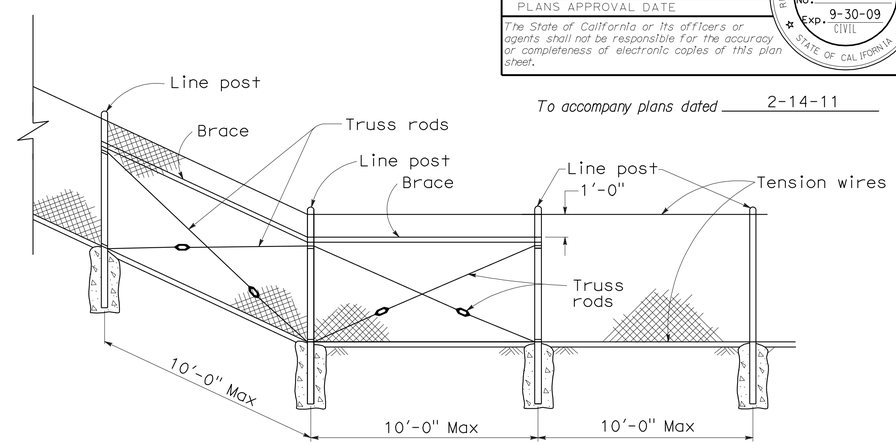

CHAIN LINK FENCE ON SHARP BREAK IN GRADE

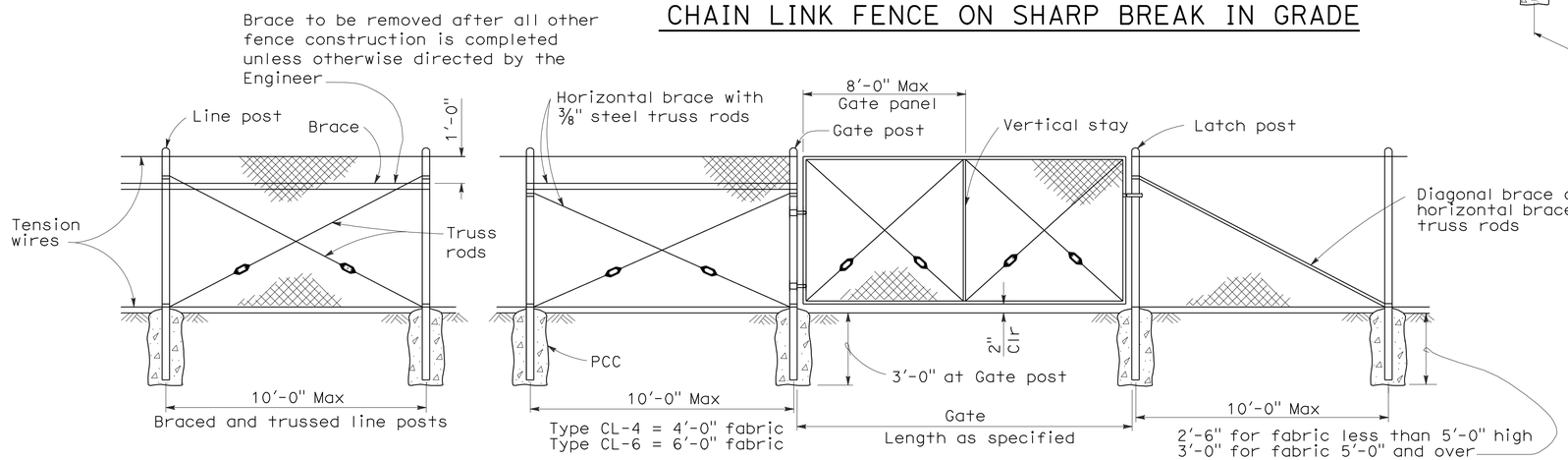

CHAIN LINK GATE INSTALLATION

GATE POST			
FENCE HEIGHT	GATE WIDTHS	NOMINAL ID	WEIGHT PER FOOT
6'-0" and Less	Up thru 6'-0"	2½"	4.95 LB
	Over 6'-0" thru 12'-0"	4"	10.79 LB
	Over 12'-0" thru 18'-0"	5"	14.62 LB
	Over 18'-0" to 24'-0" Max	6"	18.97 LB
Over 6'-0"	Up thru 6'-0"	3"	7.58 LB
	Over 6'-0" thru 12'-0"	5"	14.62 LB
	Over 12'-0" thru 18'-0"	6"	18.97 LB
	Over 18'-0" to 24'-0" Max	8"	28.55 LB

Above post dimensions and weights are minimums. Larger sizes may be used on approval of the Engineer.

NOTES:

1. The below table shows examples of post and brace sections which may comply with the Specifications.
2. Sections shown in the tables must also comply with the strength requirements and other provisions of the Specifications.
3. Other sections which comply with the strength requirements and other provisions of the Specifications may be used on approval of the Engineer.
4. Options exercised shall be uniform on any one project.
5. Dimensions shown are nominal.
6. Offset to be 2'-0" at monument locations, measured at right angles to R/W lines. Taper to achieve offset to be at least 20'-0" long.

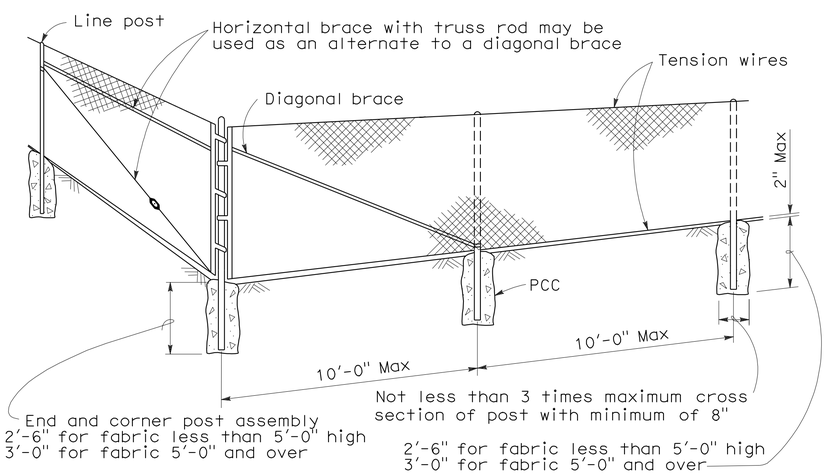

CORNER POST

TYPICAL MEMBER DIMENSIONS (See Notes)											
FENCE HEIGHT	LINE POSTS			END, LATCH & CORNER POSTS				BRACES			
	ROUND ID	H	ROLL FORMED	ROUND ID	ROLL FORMED			ROUND ID	H	ROLL FORMED	
6' & less	1½"	1⅞" × 1⅝"	1⅞" × 1⅝"	2"	3½" × 3½"	2" × 1¾"		1¼"	1½" × 1 5/16"	1⅝" × 1¼"	1¾" × 1¼"
Over 6'	2"	2¼" × 2"	2" × 1¾"	2½"	3½" × 3½"	2½" × 2½"		1¼"	1½" × 1 5/16"	1⅝" × 1¼"	1¾" × 1¼"

STATE OF CALIFORNIA
DEPARTMENT OF TRANSPORTATION

CHAIN LINK FENCE

NO SCALE

RSP A85 DATED JUNE 5, 2009 SUPERSEDES STANDARD PLAN A85
DATED MAY 1, 2006 - PAGE 111 OF THE STANDARD PLANS BOOK DATED MAY 2006.

REVISED STANDARD PLAN RSP A85

2006 REVISED STANDARD PLAN RSP A85

5-7-09

DIST	COUNTY	ROUTE	POST MILES TOTAL PROJECT	SHEET NO.	TOTAL SHEETS
12	Ora	5	5.6/6.6	90	154

REGISTERED CIVIL ENGINEER

June 5, 2009
PLANS APPROVAL DATE

REGISTERED PROFESSIONAL ENGINEER Glenn DeCou No. C34547 Exp. 9-30-09 CIVIL STATE OF CALIFORNIA

The State of California or its officers or agents shall not be responsible for the accuracy or completeness of electronic copies of this plan sheet.

To accompany plans dated 2-14-11

NOTES:

1. H is 2'-6" for fabric less than 5'-0" high.
   H is 3'-0" for fabric 5'-0" and over.
2. T is not less than 3 times maximum cross section of post with minimum of 8".
3. Arms with barbed wire to be used where shown on plans.
4. See Revised Standard Plan RSP A85 for Chain Link Fencing dimensions.
5. Reinforcing must comply with ASTM A 706.
6. See Detail A on New Standard Plan NSP A86B for connection at headwall.

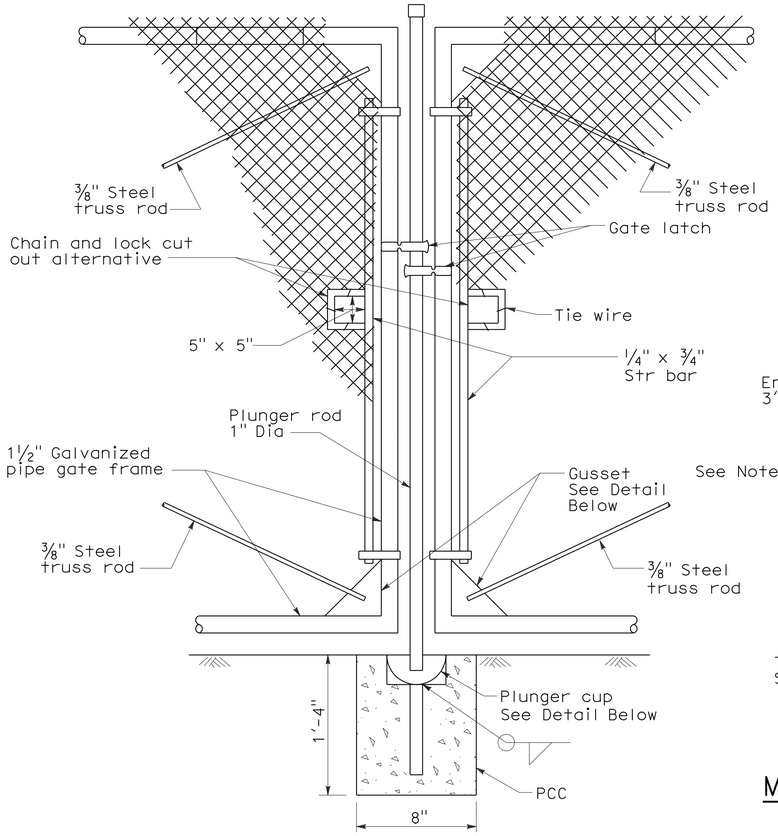

TYPICAL DOUBLE GATE
REMOVABLE CENTER POST

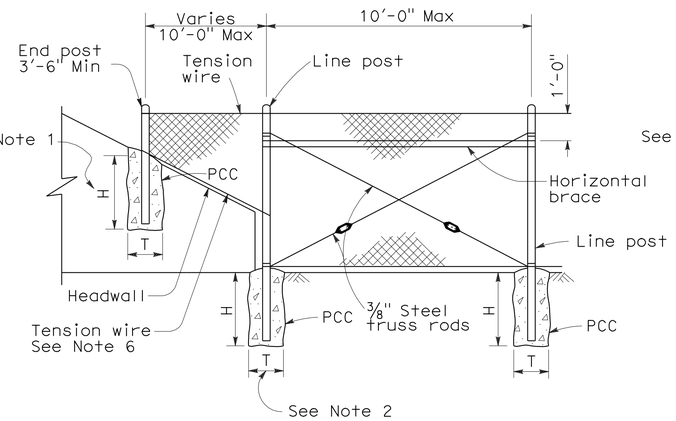

METHOD OF TYING FENCE TO HEADWALL

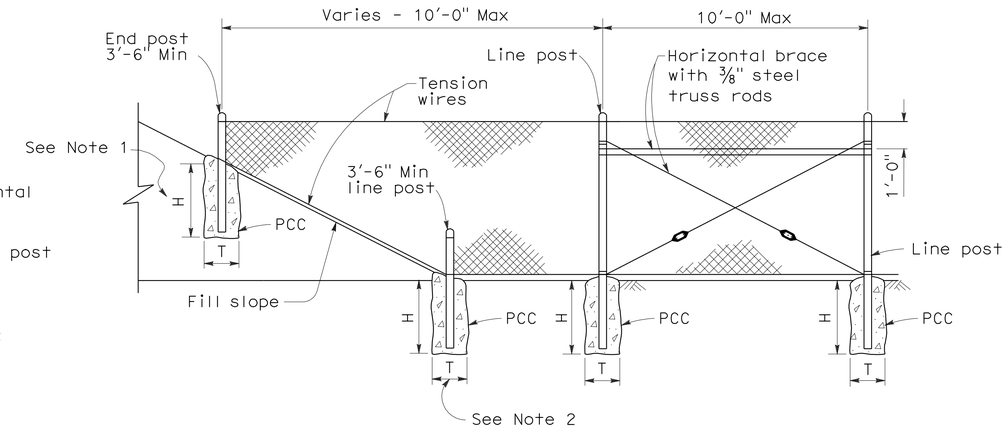

METHOD OF ERECTING FENCE FOR FILL SLOPE

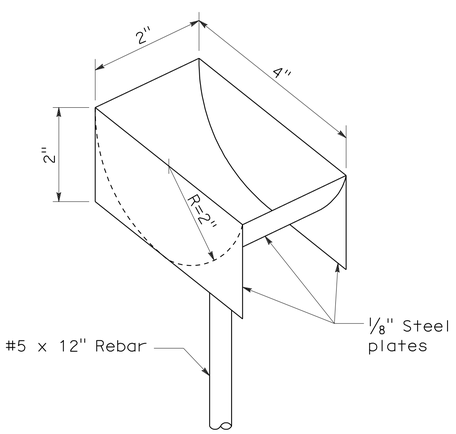

PLUNGER CUP DETAIL

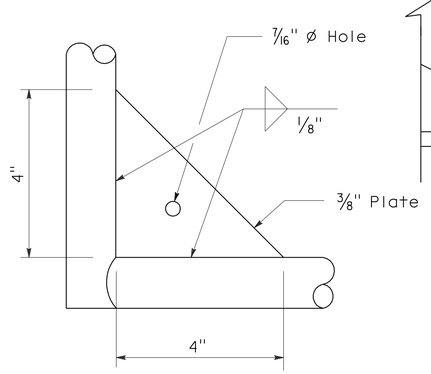

GUSSET DETAIL

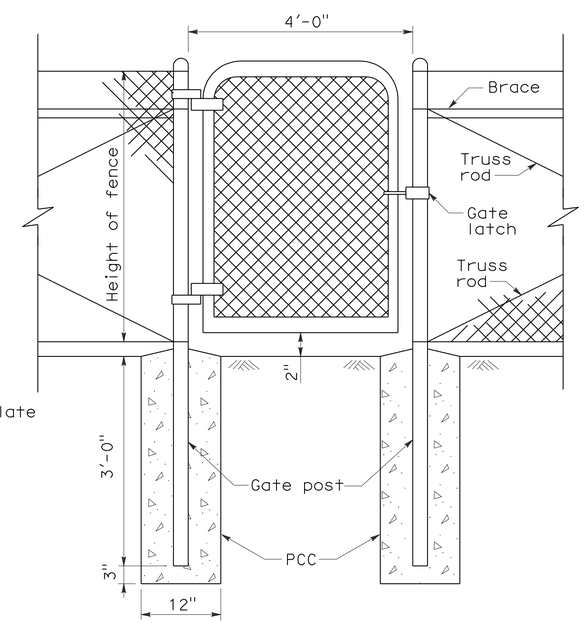

WALK GATE

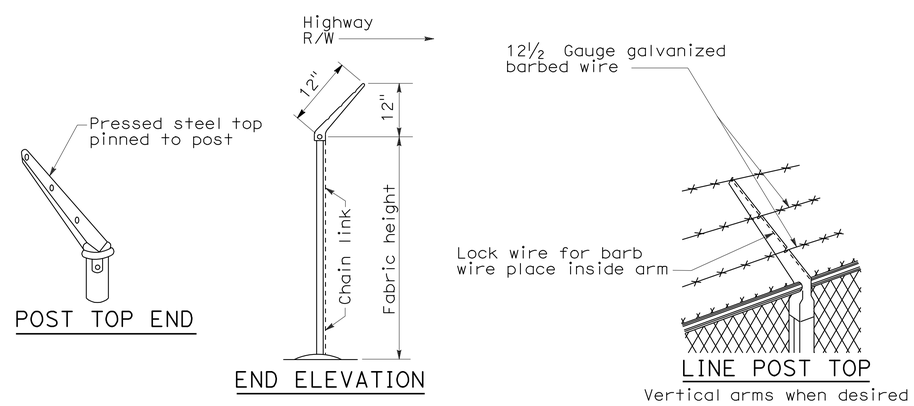

POST TOP END

END ELEVATION

LINE POST TOP
Vertical arms when desired

BARBED WIRE POST TOP
See Note 3

STATE OF CALIFORNIA
DEPARTMENT OF TRANSPORTATION

CHAIN LINK FENCE DETAILS

NO SCALE

NSP A85A DATED JUNE 5, 2009 SUPPLEMENTS THE STANDARD PLANS BOOK DATED MAY 2006.

NEW STANDARD PLAN NSP A85A

2006 NEW STANDARD PLAN NSP A85A

5-7-09

DIST	COUNTY	ROUTE	POST MILES TOTAL PROJECT	SHEET NO.	TOTAL SHEETS
12	Ora	5	5.6/6.6	91	154

REGISTERED CIVIL ENGINEER

June 5, 2009
PLANS APPROVAL DATE

REGISTERED PROFESSIONAL ENGINEER Glenn DeCou No. C34547 Exp. 9-30-09 CIVIL STATE OF CALIFORNIA

The State of California or its officers or agents shall not be responsible for the accuracy or completeness of electronic copies of this plan sheet.

To accompany plans dated 2-14-11

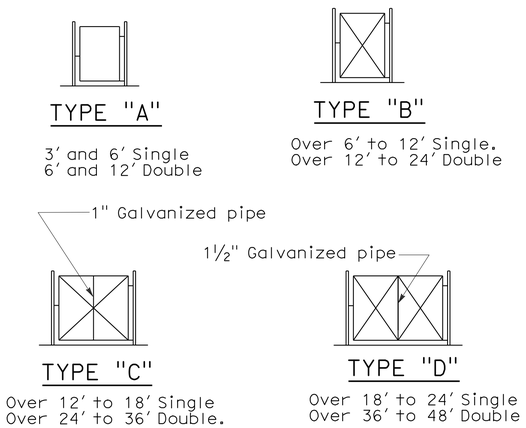

TYPICAL FRAMEWORK SHOWING NUMBER OF BAYS IN GATE

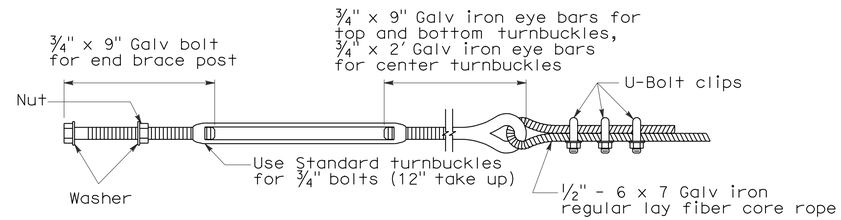

TURNBUCKLE A

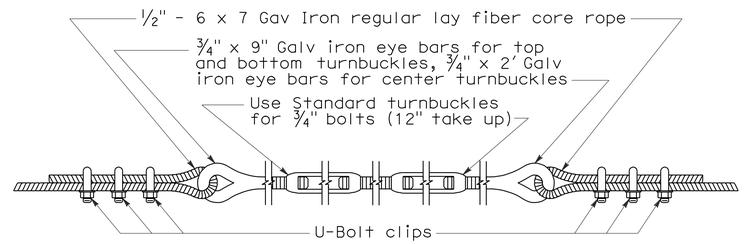

TURNBUCKLE B

NOTES:

1. All material for abutment connection to be galvanized.
2. The chain link fabric shall be replaced by barbed wire strands at 12" maximum centers between the double posts.
3. When the width of the culvert makes it necessary to anchor a post to the top of the culvert, a cast iron shoe or other device approved by the Engineer shall be used.
4. Fencing over stream and around headwall may also use Barbed Wire or Wire Mesh fencing with either wood post or steel post installation.
5. See Revised Standard Plan RSP A85 for Chain Link fence dimensions. See Standard Plan A86 for Barbed Wire and Wire Mesh fence dimensions and for wood post and steel post installation.

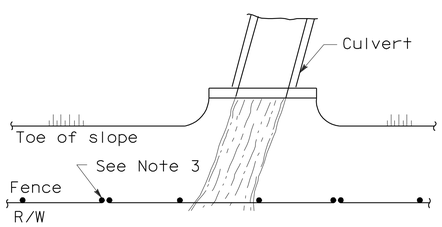

PLAN

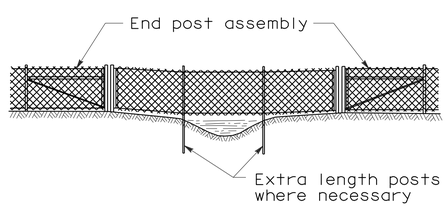

ELEVATION

INSTALLATION OVER STREAM

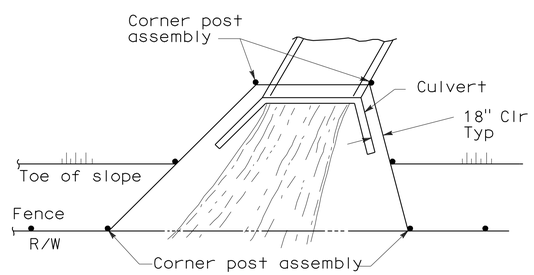

PLAN

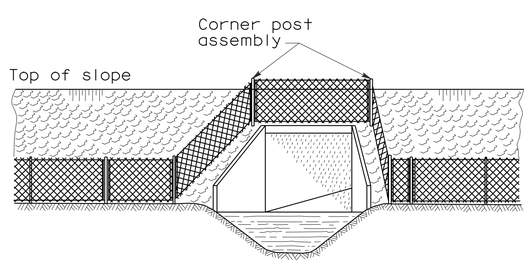

ELEVATION

INSTALLATION AROUND HEADWALL

See Note 4

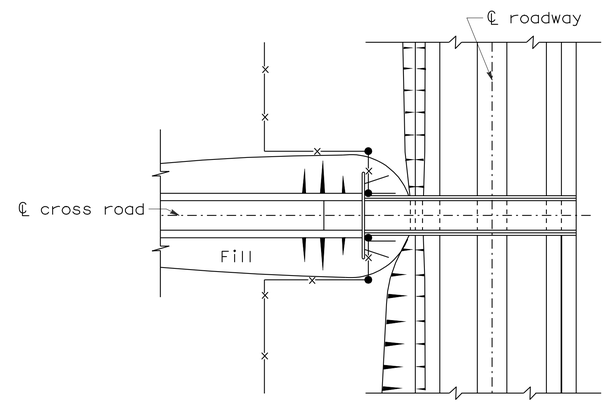

PLAN OF ROADWAY - UNDERPASS

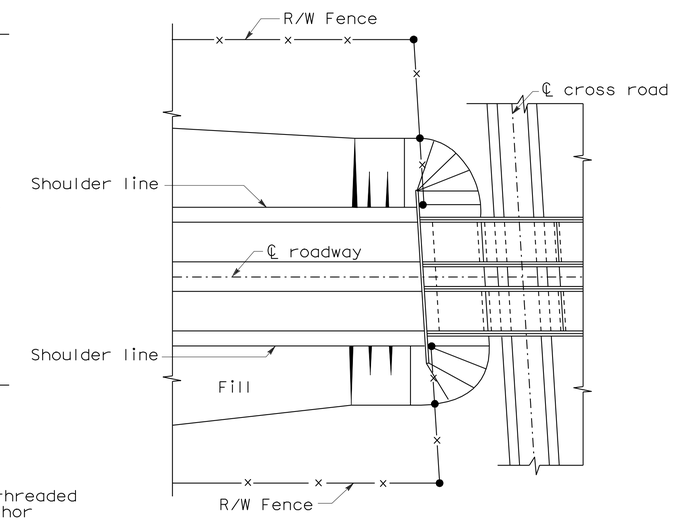

PLAN OF ROADWAY - OVERPASS

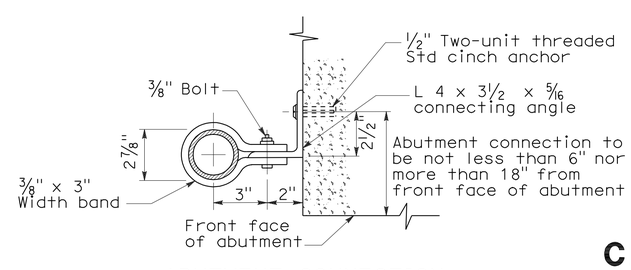

ABUTMENT CONNECTION

TYPICAL INSTALLATION AT BRIDGES

STATE OF CALIFORNIA
DEPARTMENT OF TRANSPORTATION

CHAIN LINK FENCE DETAILS

NO SCALE

NSP A85B DATED JUNE 5, 2009 SUPPLEMENTS THE STANDARD PLANS BOOK DATED MAY 2006.

NEW STANDARD PLAN NSP A85B

2006 NEW STANDARD PLAN NSP A85B

5-12-09

DIST	COUNTY	ROUTE	POST MILES TOTAL PROJECT	SHEET NO.	TOTAL SHEETS
12	Ora	5	5.6/6.6	92	154

REGISTERED CIVIL ENGINEER

November 17, 2006
PLANS APPROVAL DATE

REGISTERED PROFESSIONAL ENGINEER
Michael Janzen
No. 44788
Exp. 03-31-08
CIVIL
STATE OF CALIFORNIA

The State of California or its officers or agents shall not be responsible for the accuracy or completeness of electronic copies of this plan sheet.

To accompany plans dated 2-14-11

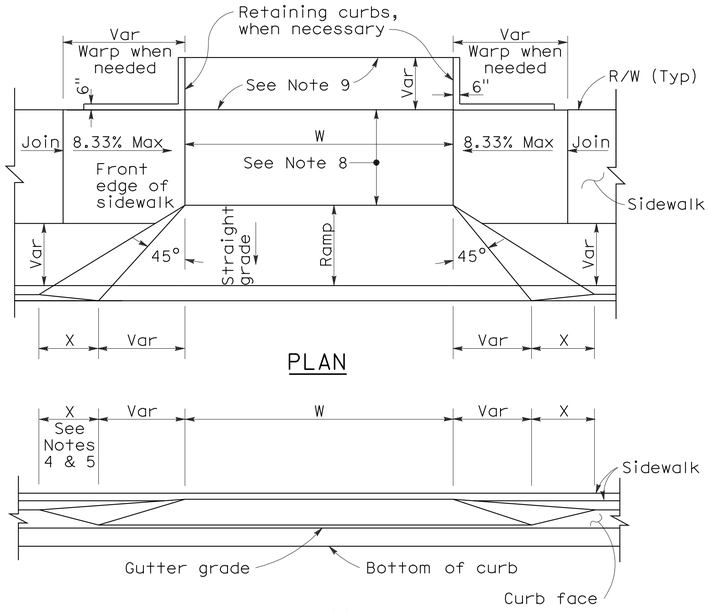

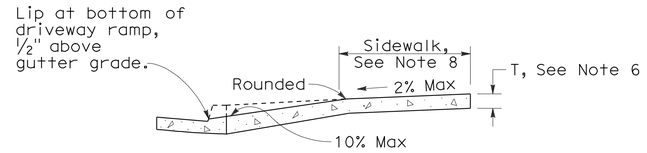

CASE A

Typical driveway, sidewalk not depressed

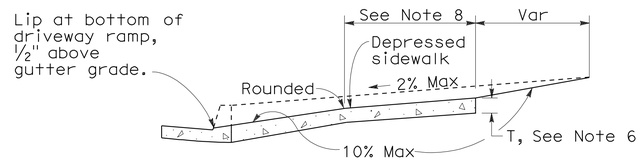

CASE B

Driveway with depressed sidewalk

SECTIONS

CURB QUANTITIES

TYPE	CUBIC YARDS PER LINEAR FOOT
A1-6	0.02585
A1-8	0.03084
A2-6	0.05903
A2-8	0.06379
A3-6	0.01036
A3-8	0.01435
B1-4	0.02185
B1-6	0.02930
B2-4	0.05515
B2-6	0.06171
B3-4	0.00641
B3-6	0.01074
B4	0.05709
D-4	0.04083
D-6	0.06804
E	0.06661

TABLE A

CURB TYPE	DIMENSIONS "H1"	"H2"	"W1"	"W2"
A1-6	1'-2"	6"	7½"	1½"
A1-8	1'-4"	8"	8"	2"
A2-6	1'-0"	6"	2'-7½"	1½"
A2-8	1'-2"	8"	2'-8"	2"
A3-6	6"	5"	7¼"	1¼"
A3-8	8"	7"	7¾"	1¾"
B1-4	1'-0"	4"	7½"	2½"
B1-6	1'-2"	6"	9"	4"
B2-4	10"	4"	2'-7½"	2½"
B2-6	1'-0"	6"	2'-9"	4"
B3-4	4"	3"	7"	2"
B3-6	6"	5"	8½"	3½"
D-4	10"	4"	1'-6"	1'-1"
D-6	1'-0"	6"	2'-2"	1'-8"

DRIVEWAYS

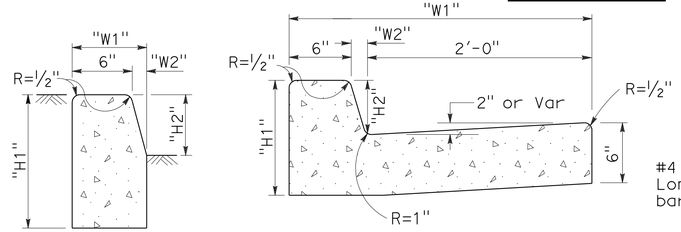

TYPE A1 CURBS

See Table A

TYPE A2 CURBS

See Table A

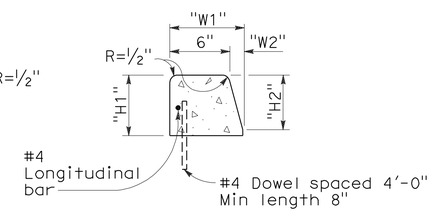

TYPE A3 CURBS

Superimposed on existing pavement
See Table A

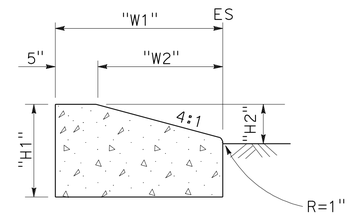

TYPE D CURBS

See Table A

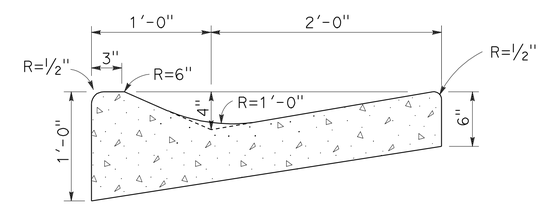

TYPE E CURB

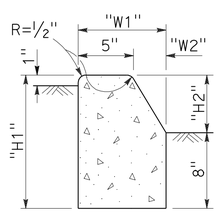

TYPE B1 CURBS

See Table A

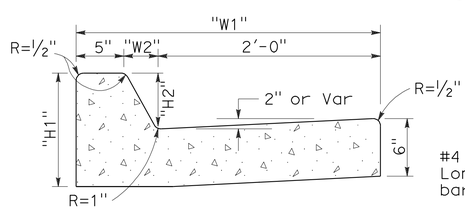

TYPE B2 CURBS

See Table A

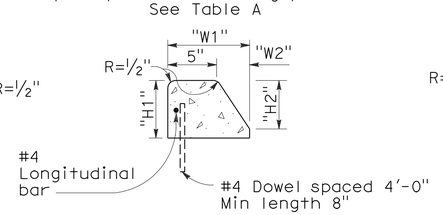

TYPE B3 CURBS

Superimposed on existing pavement
See Table A

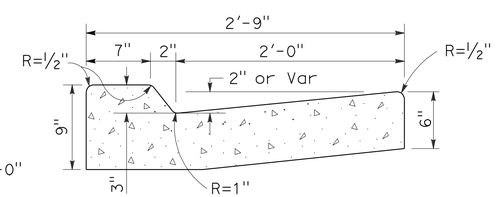

TYPE B4 CURBS

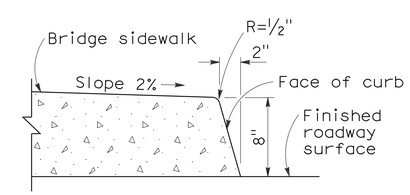

TYPE H CURB

On Bridges

CURBS

NOTES:

1. Case A driveway section typically applies.
2. Use Case B driveway section when ramp slopes would exceed 10% in Case A.
3. Use Case B driveway section when sidewalk cross slope would exceed 2% in Case A.
4. X=3'-0" except for curb heights over 10" where 4:1 slopes shall be used on curb slope.
5. X is a variable when sidewalk is located where wheelchairs may traverse the surface. Slopes shall not exceed 8.33%.
6. Sidewalk and ramp thickness "T" at driveway shall be 4" for residental and 6" for commercial.
7. Difference in slope of the driveway ramp and the slope of a line between the gutter and a point on the roadway 5'-0" from gutter line shall not exceed 15%. Reduce driveway ramp slope, not gutter slope, where required.
8. Minimum width of clear passageway for sidewalk shall be 4'-0".
9. Retaining curbs and acquisition of construction easement may be necessary for narrow sidewalks or curb heights in excess of 6".
10. Across the pedestrian route at curb ramp locations, the gutter pan slope shall not exceed 1" of depth for each 2'-0" of width.

STATE OF CALIFORNIA
DEPARTMENT OF TRANSPORTATION

CURBS AND DRIVEWAYS

NO SCALE

RSP A87A DATED NOVEMBER 17, 2006 SUPERSEDES STANDARD PLAN A87A DATED MAY 1, 2006 - PAGE 113 OF THE STANDARD PLANS BOOK DATED MAY 2006.

REVISED STANDARD PLAN RSP A87A

2006 REVISED STANDARD PLAN RSP A87A

10-25-06

DIST	COUNTY	ROUTE	POST MILES TOTAL PROJECT	SHEET NO.	TOTAL SHEETS
12	Ora	5	5.6/6.6	93	154

REGISTERED CIVIL ENGINEER

September 1, 2006
PLANS APPROVAL DATE

REGISTERED PROFESSIONAL ENGINEER
Hector David Cordova
No. C41957
Exp. 3-31-08
CIVIL
STATE OF CALIFORNIA

The State of California or its officers or agents shall not be responsible for the accuracy or completeness of electronic copies of this plan sheet.

To accompany plans dated 2-14-11

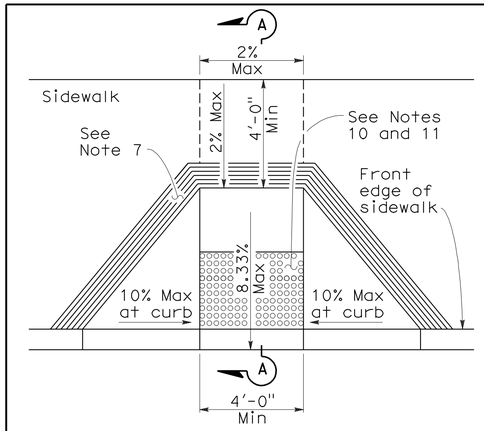

CASE A

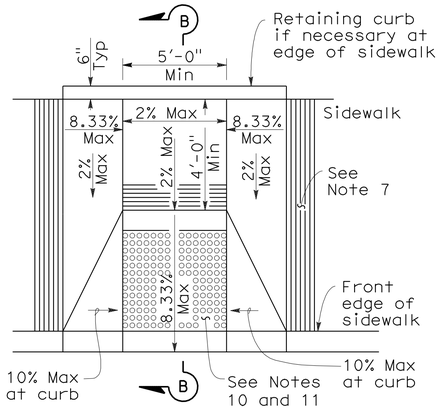

CASE B

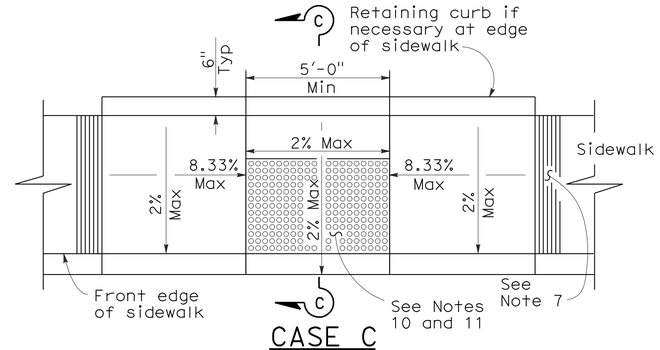

CASE C

CASE D

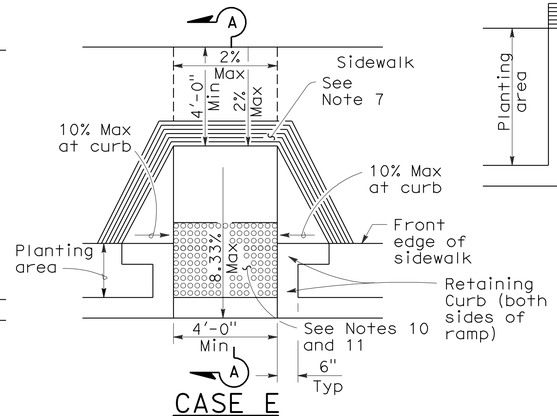

CASE E

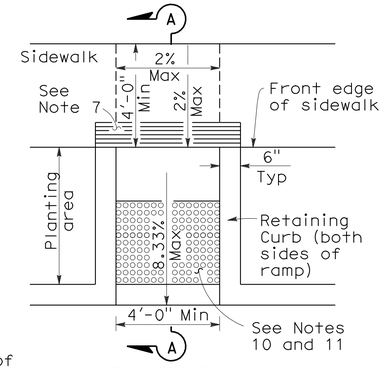

CASE F

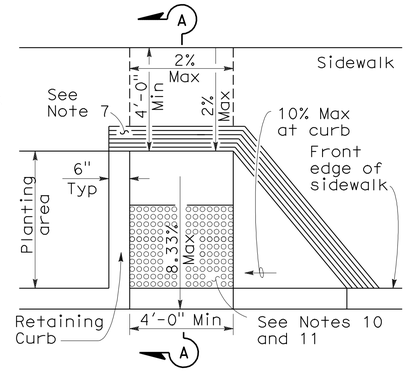

CASE G
See Note 4

SECTION A-A

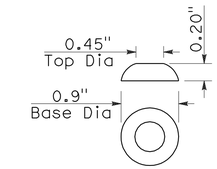

RAISED TRUNCATED DOME

NOTES:

1. As site conditions dictate, Case A through Case G curb ramps may be used for corner installations similar to those shown in Detail A and Detail B. The case of curb ramps used in Detail A do not have to be the same. Case A through Case G curb ramps also may be used at mid block locations, as site conditions dictate.
2. If distance from curb to back of sidewalk is too short to accommodate ramp and 4'-0" platform (landing) as shown in Case A, the sidewalk may be depressed longitudinally as in Case B, or C or may be widened as in Case D.
3. When ramp is located in center of curb return, crosswalk configuration must be similar to that shown for Detail B.
4. As site conditions dictate, the retaining curb side and the flared side of the Case G ramp shall be constructed in reversed position.
5. If located on a curve, the sides of the ramp need not be parallel, but the minimum width of the ramp shall be 4'-0".
6. Side slope of ramp flares vary uniformly from a maximum of 10% at curb to conform with longitudinal sidewalk slope adjacent to top of the ramp, except in Case C and Case F.
7. The curb ramp shall be outlined, as shown, with a 1'-0" wide border with 1/4" grooves approximately 3/4" on center. See grooving detail.
8. Transitions from ramps and landing to walks, gutters or streets shall be flush and free of abrupt changes.
9. Maximum slopes of adjoining gutters, the road surface immediately adjacent to the curb ramp or accessible route shall not exceed 5 percent within 4'-0" of the top and bottom of the curb ramp.
10. Curb ramps shall have a detectable warning surface that extends the full width and 3'-0" depth of the ramp. Detectable Warning Surfaces shall conform to the details on this plan and the requirements in the Special Provisions.
11. The edge of the detectable warning surface nearest the street shall be between 6" and 8" from the gutter flowline.
12. Sidewalk and ramp thickness, "T", shall be 3 1/2" minimum.
13. Utility pull boxes, manholes, vaults and all other utility facilities within the boundaries of the curb ramp will be relocated or adjusted to grade by the owner prior to, or in conjunction with, curb ramp construction.
14. For retrofit conditions, removal and replacement of curb apron will be at the Contractor's option, unless otherwise shown on project plans.

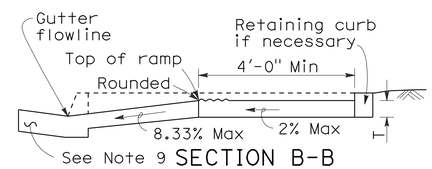

SECTION B-B
Depress entire sidewalk as required

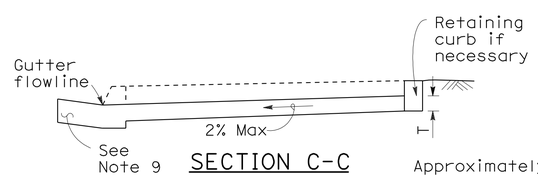

SECTION C-C

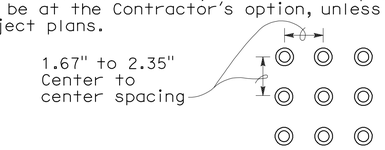

RAISED TRUNCATED DOME PATTERN (IN-LINE)

DETECTABLE WARNING SURFACE

See Note 10

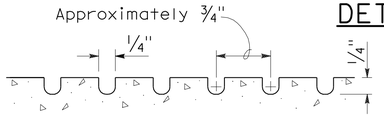

GROOVING DETAIL

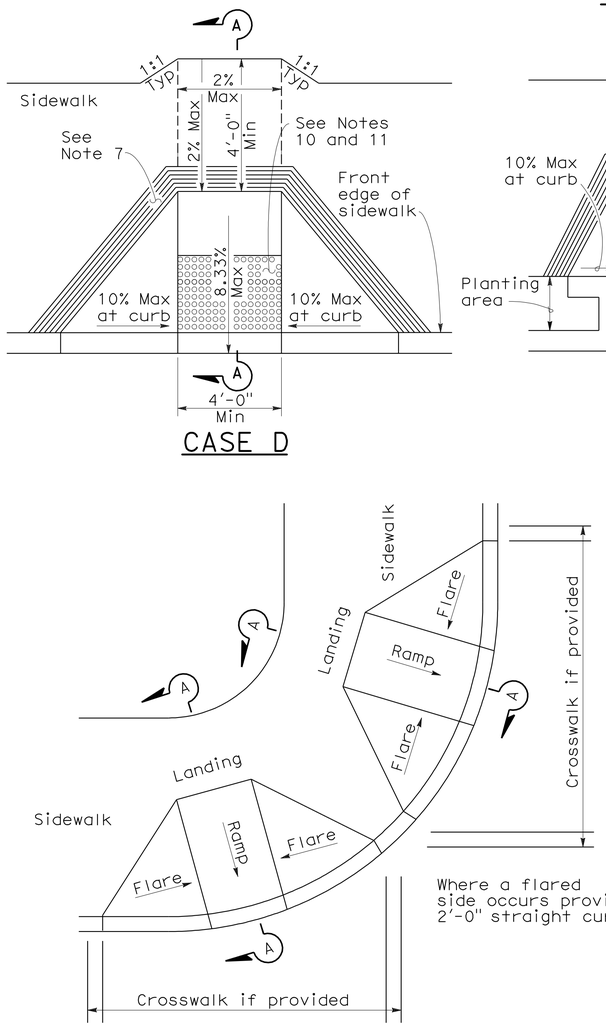

DETAIL A

TYPICAL TWO-RAMP CORNER INSTALLATION

See Note 1

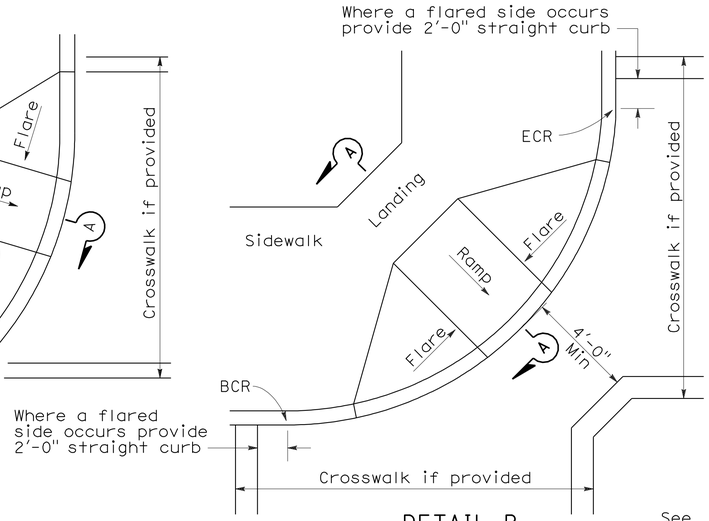

DETAIL B

TYPICAL ONE-RAMP CORNER INSTALLATION

See Notes 1 and 3

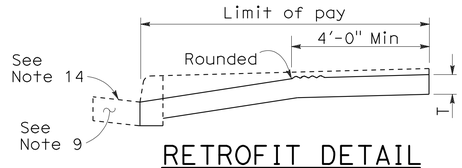

RETROFIT DETAIL
Existing curb and sidewalk

STATE OF CALIFORNIA
DEPARTMENT OF TRANSPORTATION

CURB RAMP DETAILS

NO SCALE

RSP A88A DATED SEPTEMBER 1, 2006 SUPERSEDES STANDARD PLAN A88A DATED MAY 1, 2006 - PAGE 115 OF THE STANDARD PLANS BOOK DATED MAY 2006.

REVISED STANDARD PLAN RSP A88A

2006 REVISED STANDARD PLAN RSP A88A

8-3-06

DIST	COUNTY	ROUTE	POST MILES TOTAL PROJECT	SHEET NO.	TOTAL SHEETS
12	Ora	5	5.6/6.6	94	154

William K. Farnbach
REGISTERED CIVIL ENGINEER

May 15, 2009
PLANS APPROVAL DATE

REGISTERED PROFESSIONAL ENGINEER
William K. Farnbach
No. C49042
Exp. 9-30-10
CIVIL
STATE OF CALIFORNIA

The State of California or its officers or agents shall not be responsible for the accuracy or completeness of electronic copies of this plan sheet.

To accompany plans dated 2-14-11

2006 REVISED STANDARD PLAN RSP P1

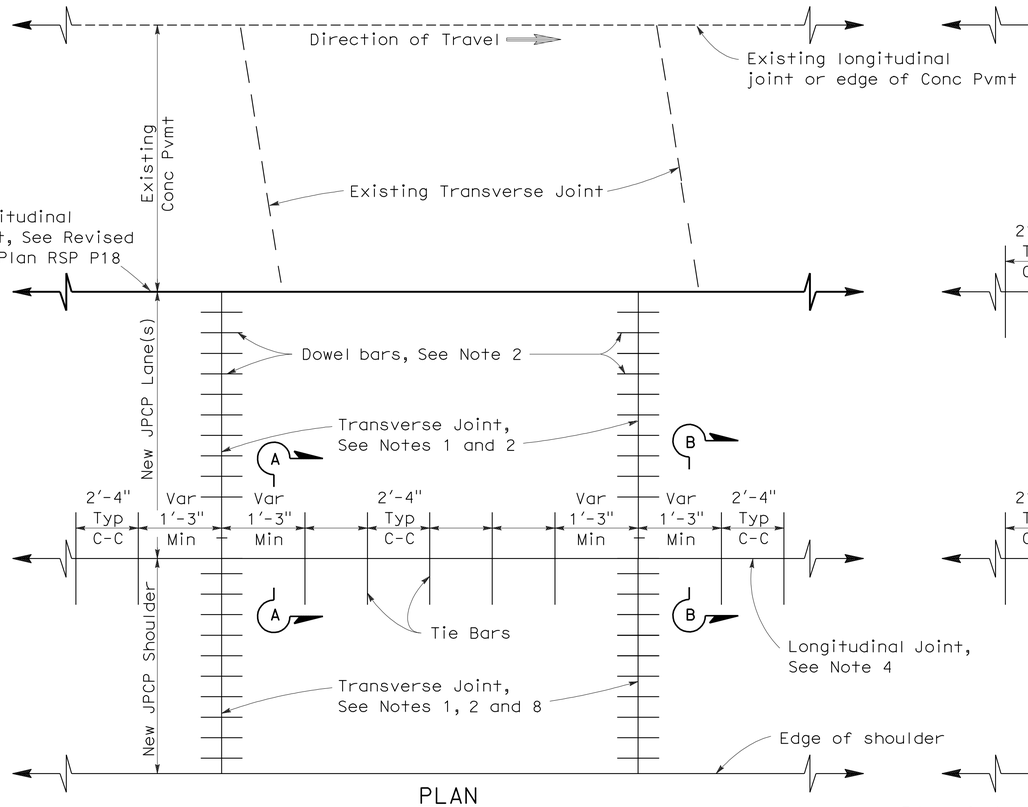

PLAN

LANE/SHOULDER ADDITION OR RECONSTRUCTION

See Notes 6 and 7

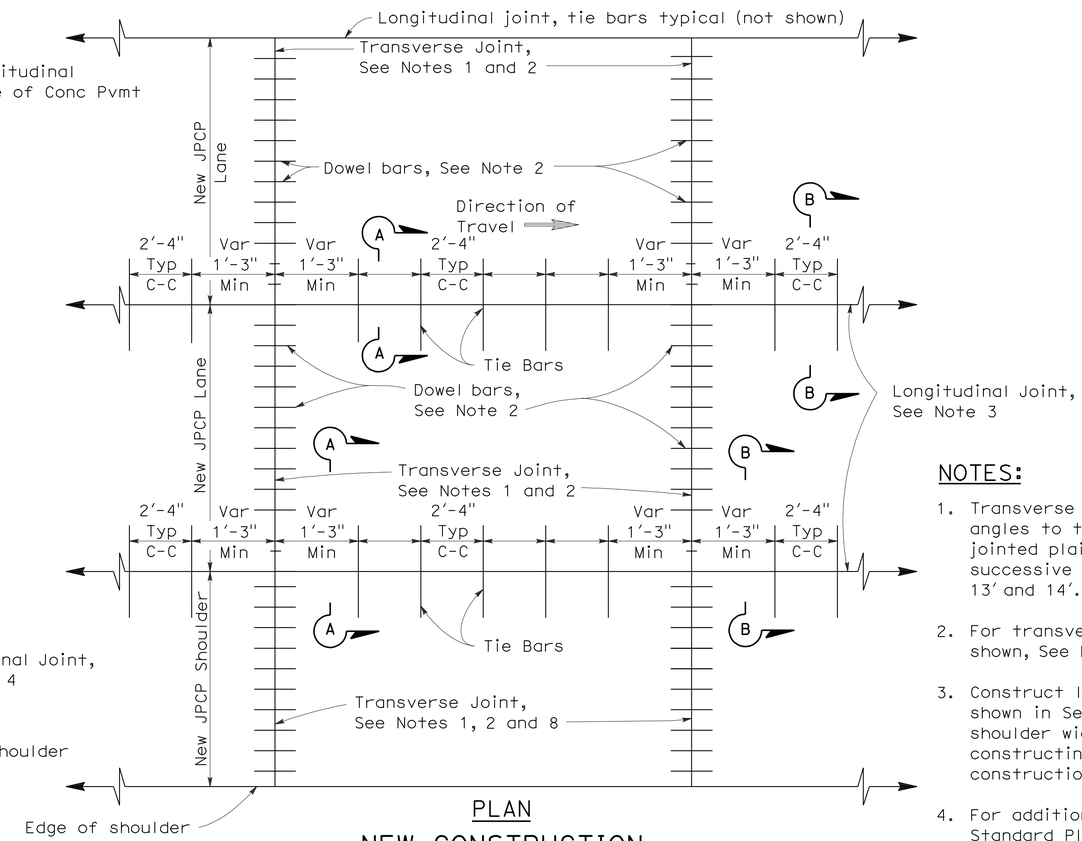

PLAN

NEW CONSTRUCTION

See Notes 6 and 7

NOTES:

1. Transverse joints shall be constructed at right angles to the longitudinal pavement joints in new jointed plain concrete pavement and spaced at successive repeated intervals of 12', 15', 13' and 14'.
2. For transverse joint and dowel bar details not shown, See Revised Standard Plan RSP P10.
3. Construct longitudinal contraction joints as shown in Section A-A when more than one lane or shoulder widths are placed at one time. If constructing one lane at a time, use longitudinal construction joint, as shown in Section B-B.
4. For additional longitudinal joint details, see Revised Standard Plan RSP P18.
5. If fresh concrete is placed adjacent to existing concrete, the top corner of the new hardened concrete does not need to be rounded to the 1/4" radius as shown.
6. Joint spacing patterns do not apply to intersections.
7. Details can also apply to inside widening.
8. Dowel bars may be omitted from shoulders when the shoulder cross slope is not the same as the adjacent traffic lane.

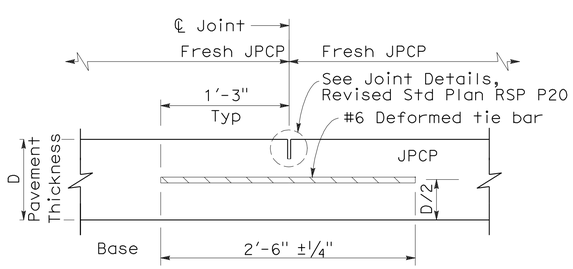

SECTION A-A

LONGITUDINAL CONTRACTION JOINT

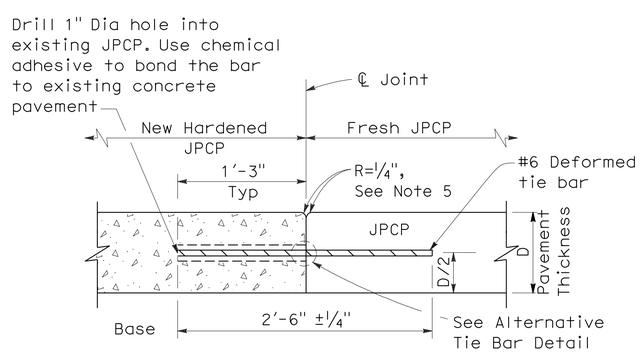

SECTION B-B

LONGITUDINAL CONSTRUCTION JOINT

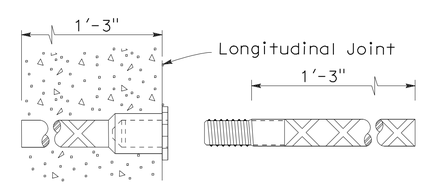

ALTERNATIVE TIE BAR SPLICE DETAIL

(Splice Coupler)

TIE BAR DETAILS

STATE OF CALIFORNIA
DEPARTMENT OF TRANSPORTATION

JOINTED PLAIN CONCRETE PAVEMENT

NO SCALE

RSP P1 DATED MAY 15, 2009 SUPERSEDES STANDARD PLAN P1
DATED MAY 1, 2006 - PAGE 119 OF THE STANDARD PLANS BOOK DATED MAY 2006.

REVISED STANDARD PLAN RSP P1

5-8-09

DIST	COUNTY	ROUTE	POST MILES TOTAL PROJECT	SHEET NO.	TOTAL SHEETS
12	Ora	5	5.6/6.6	95	154

William K. Farnbach
REGISTERED CIVIL ENGINEER

May 15, 2009
PLANS APPROVAL DATE

REGISTERED PROFESSIONAL ENGINEER — William K. Farnbach — No. C49042 — Exp. 9-30-10 — CIVIL — STATE OF CALIFORNIA

The State of California or its officers or agents shall not be responsible for the accuracy or completeness of electronic copies of this plan sheet.

To accompany plans dated 2-14-11

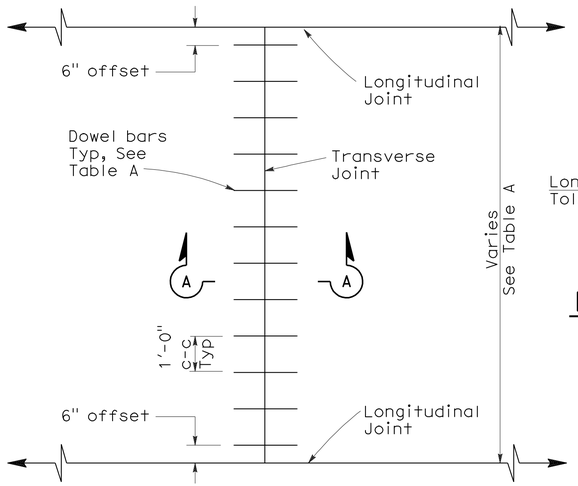

TRANSVERSE JOINT DOWEL BAR LAYOUT

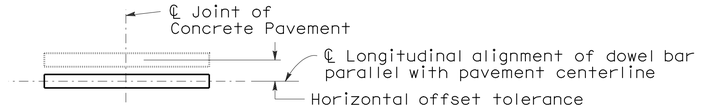

PLAN

HORIZONTAL OFFSET TOLERANCE

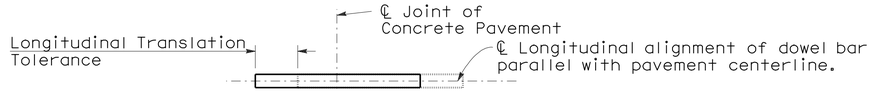

PLAN

LONGITUDINAL TRANSLATION TOLERANCE

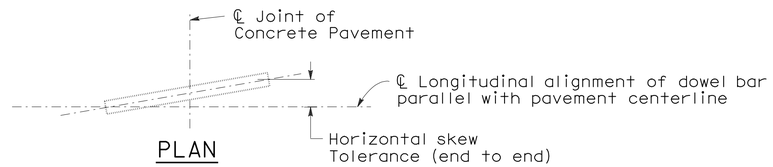

PLAN

HORIZONTAL SKEW TOLERANCE

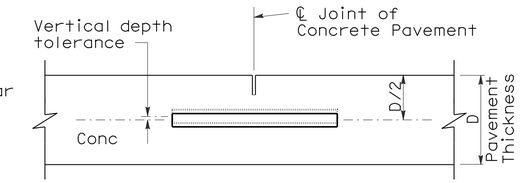

ELEVATION

VERTICAL DEPTH TOLERANCE

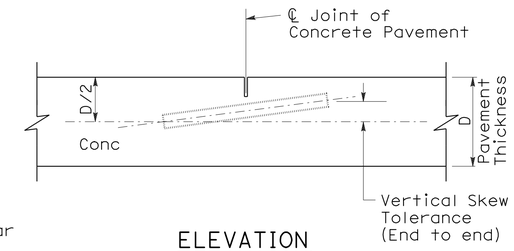

ELEVATION

VERTICAL SKEW TOLERANCE

NOTES:

1. See Revised Standard Plan RSP P1 for typical dowel bar placement and locations.
2. 1½" Dia smooth dowel bars are to be used with a pavement thickness, D, equal to or greater than 0.70 feet. For pavement thickness, D, less than 0.70 feet, use 1¼" Dia smooth dowel bars.
3. For widths not shown, see Project Plans.
4. If fresh concrete pavement is placed adjacent to existing concrete pavement, the top corner of the existing concrete pavement does not need to be rounded to the ¼" radius, as shown.

TABLE A (See Note 3)

Dowel Bar Transverse Spacing Table	
Width between Longitudinal Joints	Number of Dowels between Longitudinal Joints
14'-0"	14
13'-0"	13
12'-0"	12
11'-0"	11
10'-0"	10
8'-0"	8
5'-0"	5
4'-0"	4

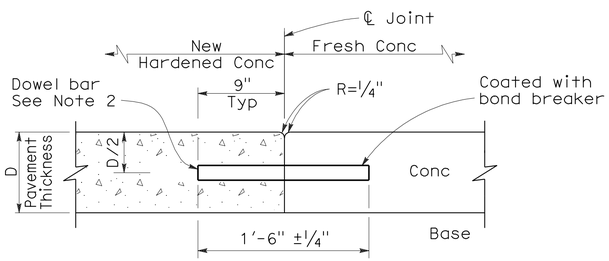

SECTION A-A

TRANSVERSE CONSTRUCTION JOINT DETAIL

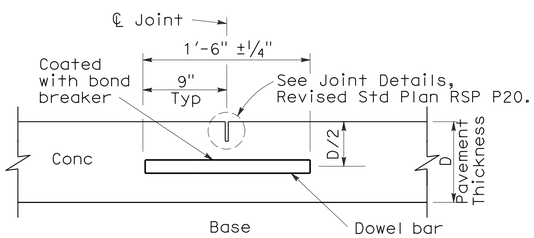

TRANSVERSE CONTRACTION JOINT

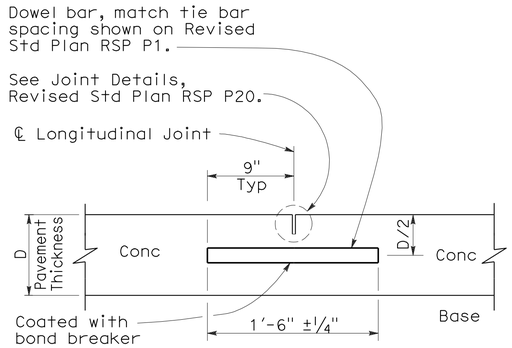

LONGITUDINAL CONTRACTION JOINT WITH DOWEL BARS

(See Revised Std Plan RSP P18)

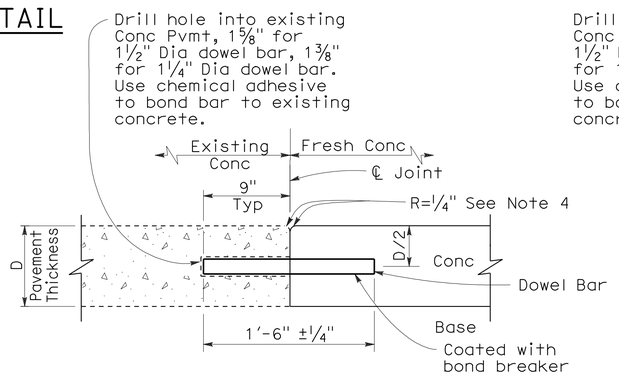

TRANSVERSE CONSTRUCTION JOINT FOR EXISTING CONCRETE PAVEMENT

(Drill and bond locations)

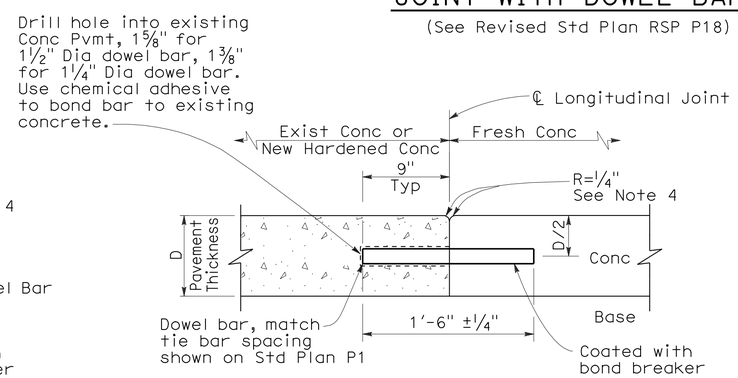

LONGITUDINAL CONSTRUCTION JOINT WITH DOWEL BARS

(See Revised Std Plan RSP P18)

STATE OF CALIFORNIA
DEPARTMENT OF TRANSPORTATION

CONCRETE PAVEMENT-DOWEL BAR DETAILS

NO SCALE

RSP P10 DATED MAY 15, 2009 SUPERSEDES STANDARD PLAN P10 DATED MAY 1, 2006 - PAGE 124 OF THE STANDARD PLANS BOOK DATED MAY 2006.

REVISED STANDARD PLAN RSP P10

2006 REVISED STANDARD PLAN RSP P10

5-8-09

DIST	COUNTY	ROUTE	POST MILES TOTAL PROJECT	SHEET NO.	TOTAL SHEETS
12	Ora	5	5.6/6.6	96	154

William K. Farnbach
REGISTERED CIVIL ENGINEER

May 15, 2009
PLANS APPROVAL DATE

REGISTERED PROFESSIONAL ENGINEER
William K. Farnbach
No. C49042
Exp. 9-30-10
CIVIL
STATE OF CALIFORNIA

The State of California or its officers or agents shall not be responsible for the accuracy or completeness of electronic copies of this plan sheet.

To accompany plans dated 2-14-11

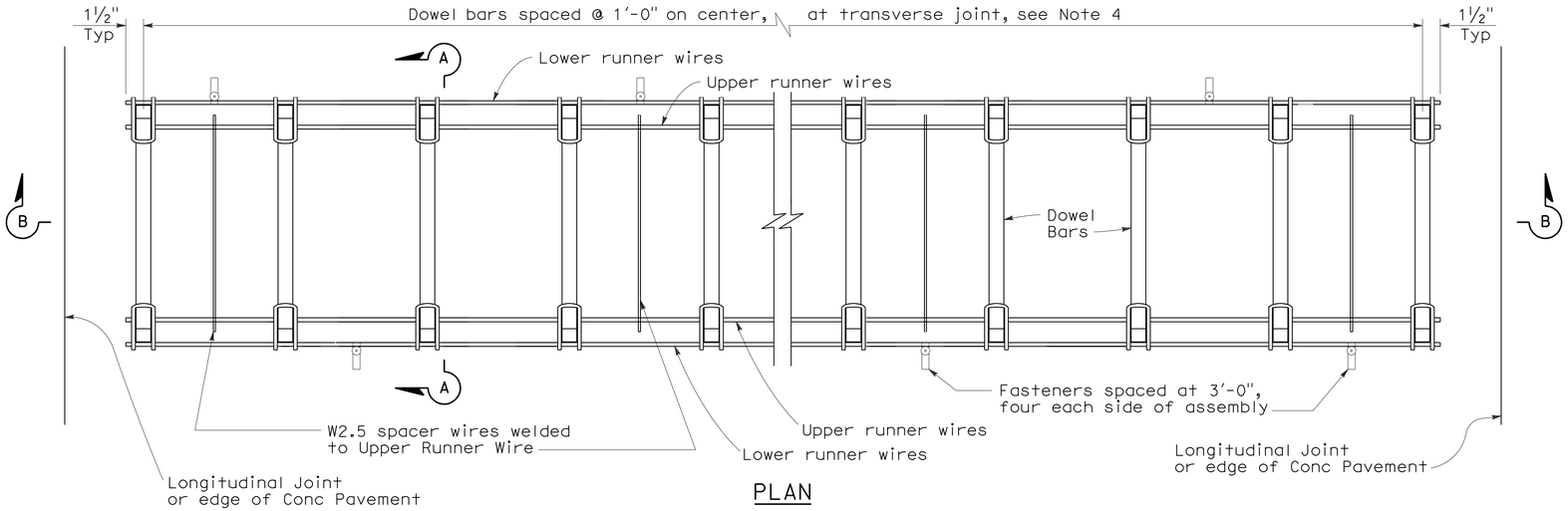

PLAN

DOWEL BAR BASKET (TRANSVERSE JOINT)

See Note 1

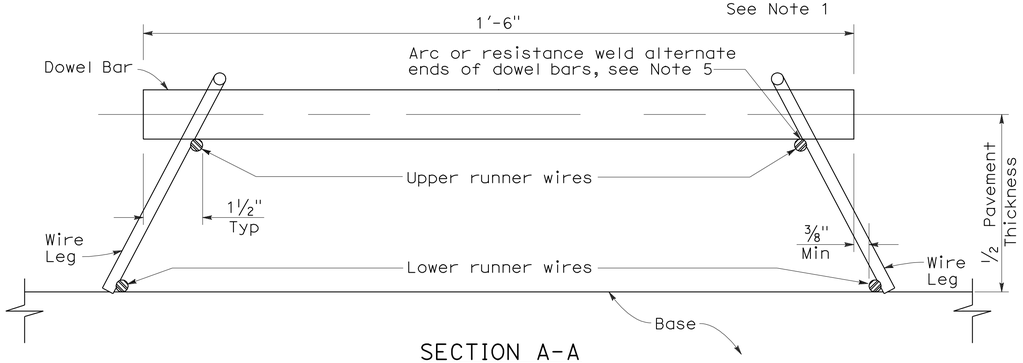

SECTION A-A

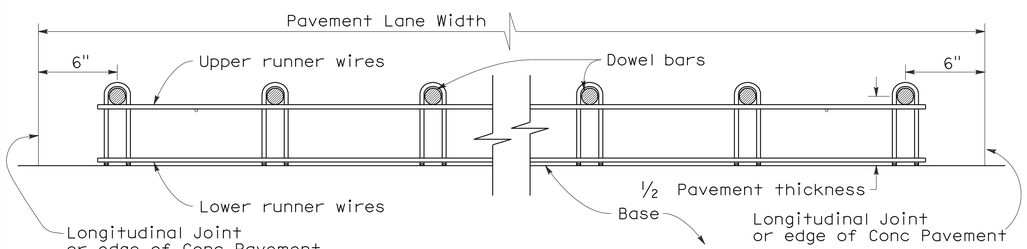

SECTION B-B

See Note 1

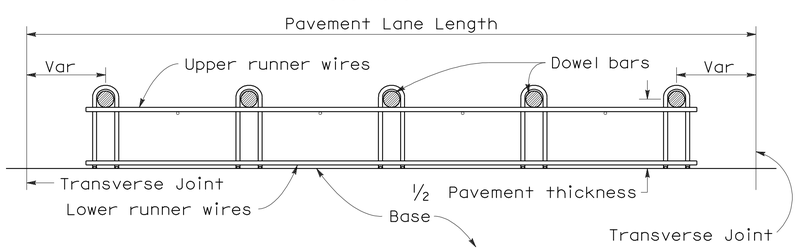

SECTION C-C

See Notes 1 and 4

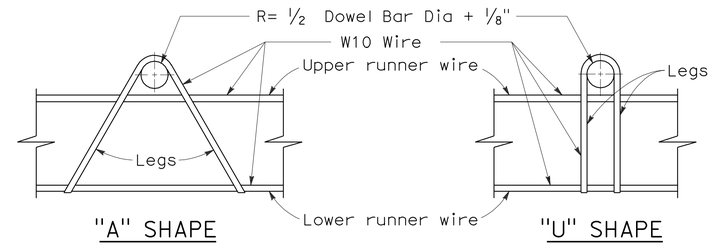

"A" SHAPE "U" SHAPE

ASSEMBLY FRAME DETAILS

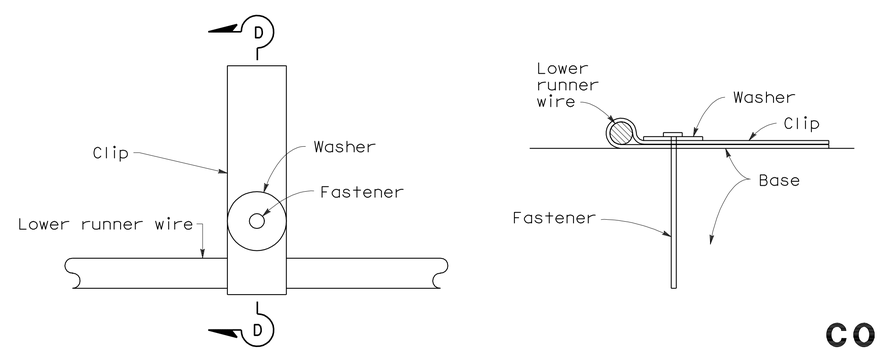

PLAN SECTION D-D

FASTENER DETAIL

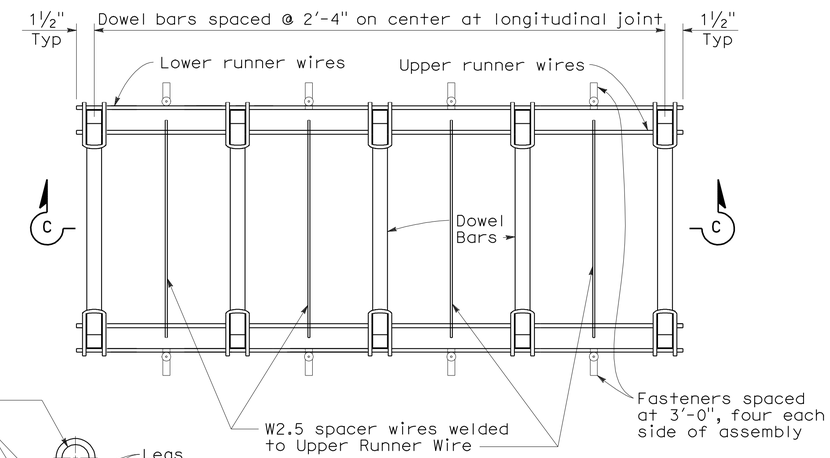

PLAN

DOWEL BAR BASKET (LONGITUDINAL JOINT)

See Note 1

NOTES:

1. "U" frame shape assembly shown. "U" frame shape or "A" frame shape are acceptable.
2. Wire sizes shown are minimum required.
3. All wire intersections are to be resistance welded.
4. Use tie bar spacing for longitudinal dowel bar locations. See Revised Std Plans RSPs P1, P2, and P3 for tie bar requirements.
5. Weld may be at top or bottom of dowel bar.

STATE OF CALIFORNIA
DEPARTMENT OF TRANSPORTATION

CONCRETE PAVEMENT-DOWEL BAR BASKET DETAILS

NO SCALE

RSP P12 DATED MAY 15, 2009 SUPERSEDES RSP P12 DATED NOVEMBER 17, 2006 AND STANDARD PLAN P12 DATED MAY 1, 2006 - PAGE 125 OF THE STANDARD PLANS BOOK DATED MAY 2006.

REVISED STANDARD PLAN RSP P12

2006 REVISED STANDARD PLAN RSP P12

5-8-09

DIST	COUNTY	ROUTE	POST MILES TOTAL PROJECT	SHEET NO.	TOTAL SHEETS
12	Ora	5	5.6/6.6	97	154

REGISTERED CIVIL ENGINEER

June 5, 2009
PLANS APPROVAL DATE

REGISTERED PROFESSIONAL ENGINEER — William K. Farnbach — No. C49042 — Exp. 9-30-10 — CIVIL — STATE OF CALIFORNIA

The State of California or its officers or agents shall not be responsible for the accuracy or completeness of electronic copies of this plan sheet.

To accompany plans dated 2-14-11

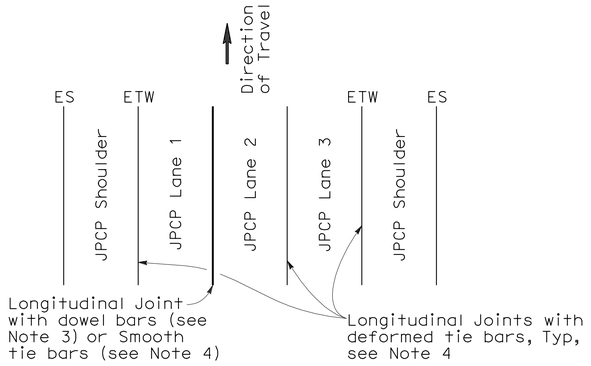

3 LANES WITH TIED CONCRETE SHOULDERS
PLAN

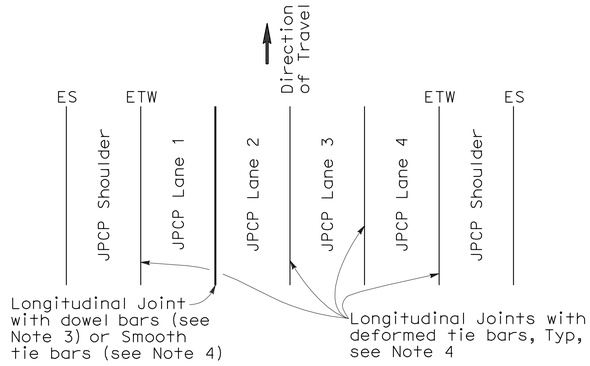

4 LANES WITH TIED CONCRETE SHOULDERS
PLAN

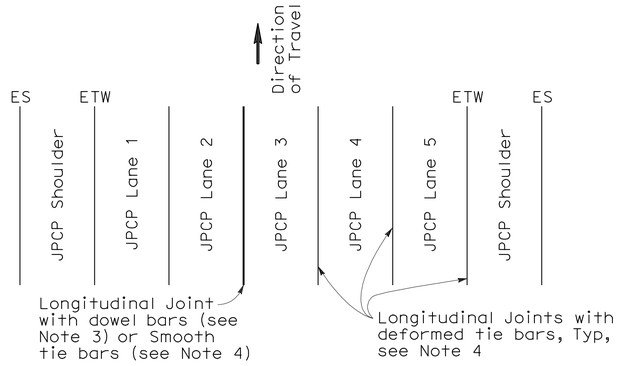

5 LANES WITH TIED CONCRETE SHOULDERS
PLAN

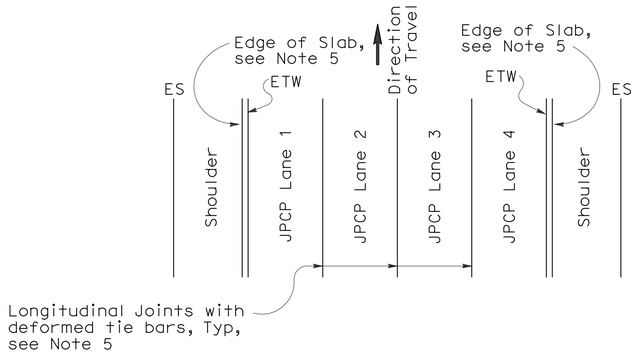

4 LANES OR LESS WITH WIDENED SLAB
PLAN

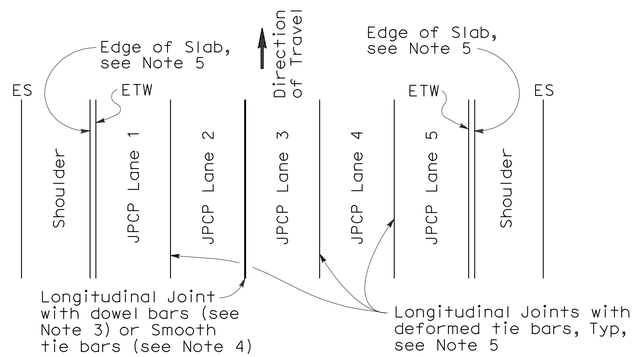

5 LANES WITH WIDENED SLAB
PLAN

NEW CONSTRUCTION

Location of Longitudinal Joints
(For JPCP)

NOTES:

1. Where Lean Concrete Base is not used as base material, the joint filler material used for the longitudinal isolation joint shall only extend to the bottom of the new concrete slab. See Detail A.
2. Use 5/8" ±1/16" dimension for silicone sealant.
3. See Revised Standard Plan RSP P10 for longitudinal joint with dowel bars.
4. See Revised Standard Plan RSP P1.
5. See Revised Standard Plan RSP P2.

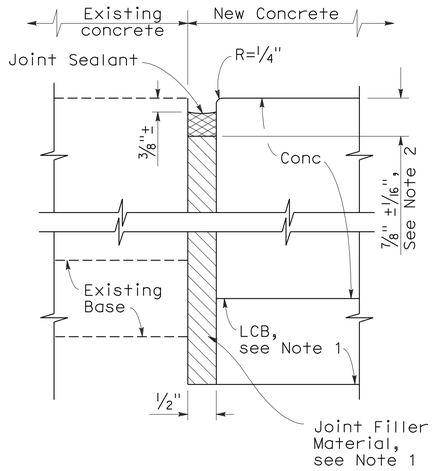

DETAIL A

ISOLATION JOINT

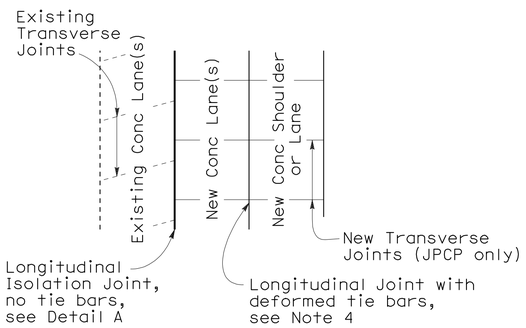

CASE 1
PLAN

Transverse Joints do not align between new and existing

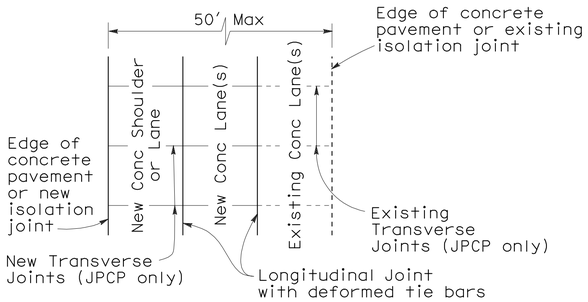

CASE 2
PLAN

Transverse Joints align between new and existing

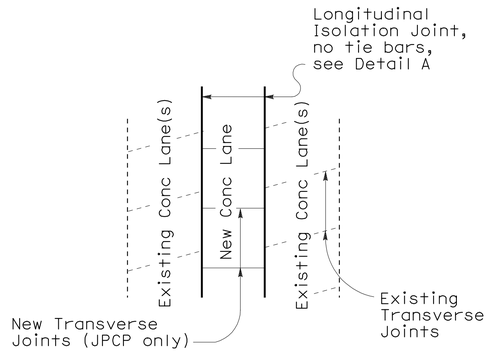

CASE 3 (INTERIOR LANE REPLACEMENT)
PLAN

Transverse Joints do not align between new and existing

LANE/SHOULDER ADDITION OR RECONSTRUCTION

(For JPCP and CRCP)

STATE OF CALIFORNIA
DEPARTMENT OF TRANSPORTATION

CONCRETE PAVEMENT-LANE SCHEMATICS AND ISOLATION JOINT DETAIL

NO SCALE

RSP P18 DATED JUNE 5, 2009 SUPERSEDES RSP P18 DATED MAY 15, 2009, RSP P18 DATED NOVEMBER 17, 2006 AND STANDARD PLAN P18 DATED MAY 1, 2006 - PAGE 127 OF THE STANDARD PLANS BOOK DATED MAY 2006.

REVISED STANDARD PLAN RSP P18

2006 REVISED STANDARD PLAN RSP P18

5-14-09

DIST	COUNTY	ROUTE	POST MILES TOTAL PROJECT	SHEET NO.	TOTAL SHEETS
12	Ora	5	5.6/6.6	98	154

REGISTERED CIVIL ENGINEER

May 15, 2009
PLANS APPROVAL DATE

REGISTERED PROFESSIONAL ENGINEER
William K. Farnbach
No. C49042
Exp. 9-30-10
CIVIL
STATE OF CALIFORNIA

The State of California or its officers or agents shall not be responsible for the accuracy or completeness of electronic copies of this plan sheet.

To accompany plans dated 2-14-11

2006 REVISED STANDARD PLAN RSP P20

NOTE:

1. Tie bars, dowel bars, and reinforcement are not shown in joint seal details, see Revised Standard Plans RSP P1, RSP P3, RSP P10, RSP P35, RSP P45, or RSP P46 as applicable.

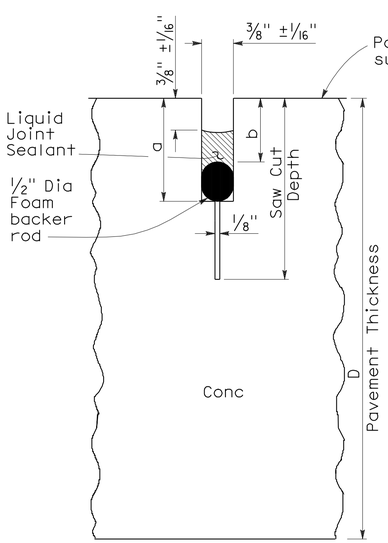

LIQUID SEALANT

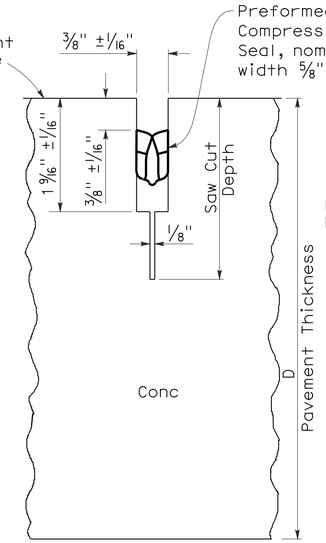

COMPRESSION SEAL

TYPE A1

Transverse Contraction Joints

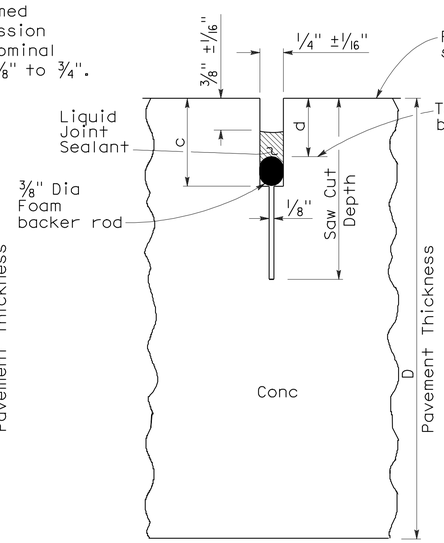

LIQUID SEALANT

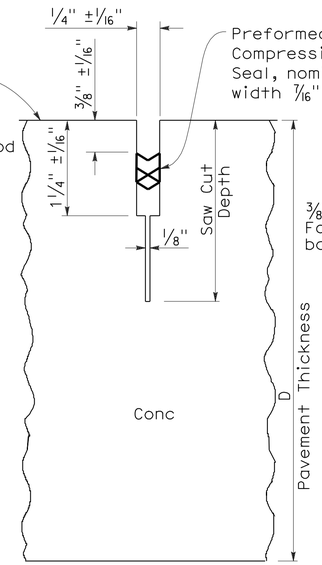

COMPRESSION SEAL

TYPE A2

Longitudinal Contraction Joints

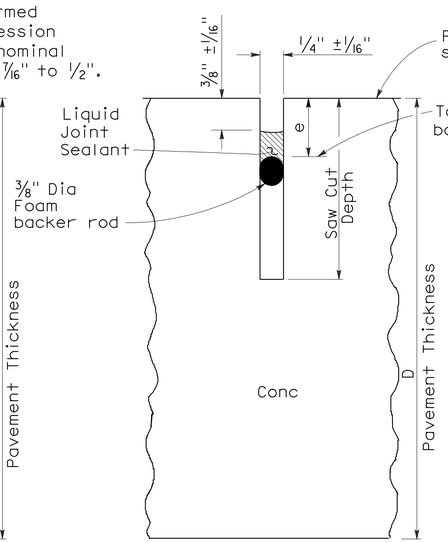

LIQUID SEALANT

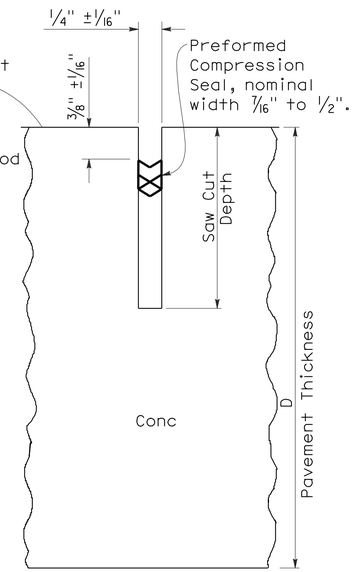

COMPRESSION SEAL

TYPE B

Longitudinal or Transverse Contraction Joint

LIQUID SEALANT RESERVOIR DEPTH

LIQUID SEALANT MATERIAL	3/8" Joint Width Type A1		1/4" Joint Width Type A2		1/4" Joint Width Type B
	DIMENSION		DIMENSION		DIMENSION
	a	b	c	d	e
SILCONE	1" ±1/16"	5/8" ±1/16"	15/16" ±1/16"	9/16" ±1/16"	9/16" ±1/16"
ASPHALT RUBBER	1 3/16" ±1/16"	3/4" ±1/16"	1 1/16" ±1/16"	11/16" ±1/16"	11/16" ±1/16"

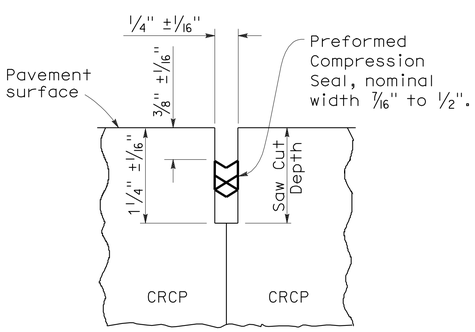

COMPRESSION SEAL

TYPE C

Transverse and Longitudinal Construction Joints (For CRCP)

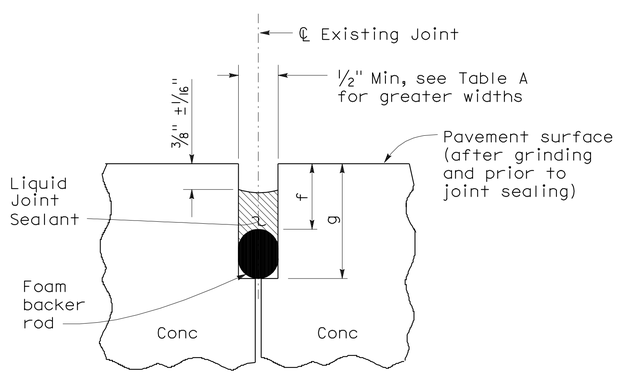

LIQUID SEALANT

TYPE R

Retrofit Transverse and Longitudinal Joints

TABLE A (TYPE R JOINT)

Sawn Joint Width	Backer Rod Diameter ± 1/16"	DIMENSION "f"	DIMENSION "g"
1"	1 5/16"	7/8"	2 1/4"
7/8"	1 3/16"	13/16"	2"
3/4"	1"	3/4"	1 3/4"
5/8"	7/8"	11/16"	1 1/2"
1/2"	11/16"	5/8"	1 1/4"

STATE OF CALIFORNIA
DEPARTMENT OF TRANSPORTATION

CONCRETE PAVEMENT-JOINT DETAILS

NO SCALE

RSP P20 DATED MAY 15, 2009 SUPERSEDES STANDARD PLAN P20
DATED MAY 1, 2006 - PAGE 128 OF THE STANDARD PLANS BOOK DATED MAY 2006.

REVISED STANDARD PLAN RSP P20

5-8-09

DIST	COUNTY	ROUTE	POST MILES TOTAL PROJECT	SHEET NO.	TOTAL SHEETS
12	Ora	5	5.6/6.6	99	154

Raymond Don Tsztoo
REGISTERED CIVIL ENGINEER

January 18, 2008
PLANS APPROVAL DATE

REGISTERED PROFESSIONAL ENGINEER
Raymond Don Tsztoo
No. C37332
Exp. 6-30-08
CIVIL
STATE OF CALIFORNIA

The State of California or its officers or agents shall not be responsible for the accuracy or completeness of electronic copies of this plan sheet.

To accompany plans dated 2-14-11

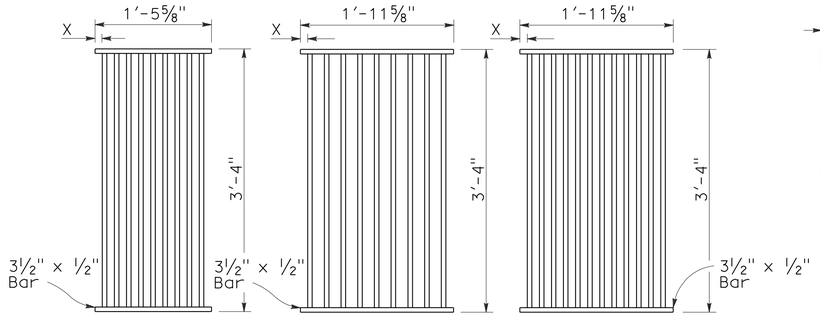

TYPE 18-9

1⅜" Clear spacing. Use within the roadbed on highways where bicycles and pedestrians are excluded.

TYPE 24-9

2" Clear spacing. Use in locations off the roadbed on all types of highways.

TYPE 24-12

1⅜" Clear spacing. Use within the roadbed on highways where bicycles and pedestrians are excluded.

RECTANGULAR GRATE DETAILS

(See table below)

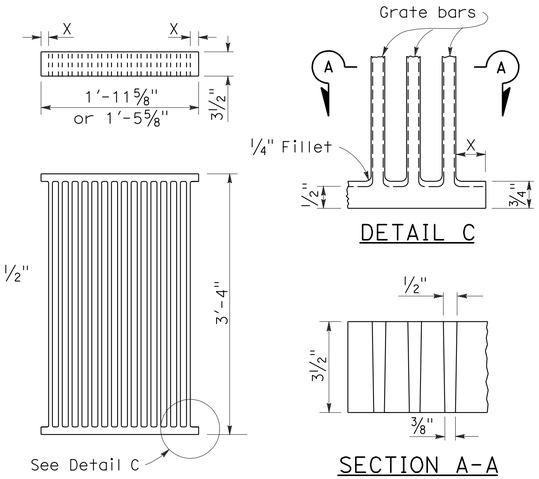

ALTERNATIVE CAST NODULAR IRON GRATE OR CAST STEEL GRATE

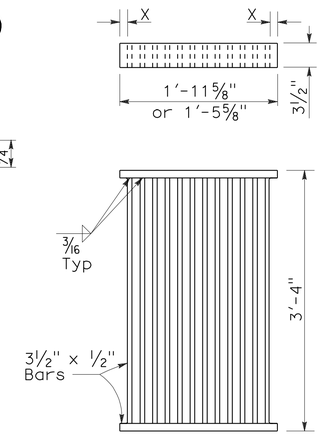

ALTERNATIVE WELDED GRATE

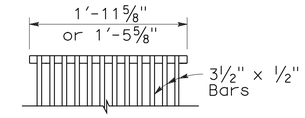

CAST END BLOCK

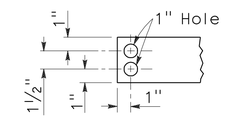

END OF BAR

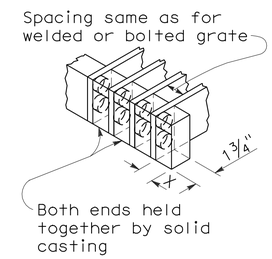

ALTERNATIVE CAST NODULAR IRON OR CAST STEEL END BLOCK GRATE

NOTES:

1. Grate type numbers refer to approximate width of grate in inches and number of bars, respectively.
2. Contractor has the option of using cast nodular iron, cast steel, welded, bolted, or cast end block grate.
3. See Special Provisions for requirements pertaining to galvanizing or asphalt dipping of grates and frames.
4. Rounded top of bars optional on all grates.
5. Pipe inlets with a grate shall be placed so that bars parallel direction of principle surface flow.
6. Full penetration butt welds may be substituted for the fillet welds on all anchors.
7. Standard square, hexagon, round or equivalent headed anchors may be substituted for the right angle hooks on the anchors shown on this plan.
8. Grate and frame weights are based on welded grates (weights of face angles, steps, protection bars, etc. are not included).

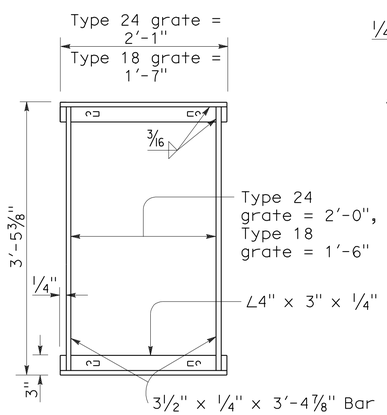

TYPICAL FRAME

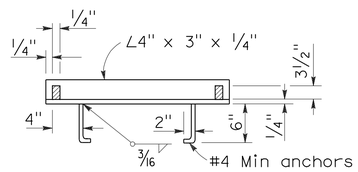

CROSS SECTION

(Thru frame)

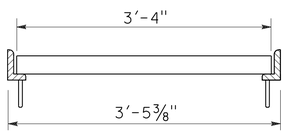

LONGITUDINAL SECTION

(Thru frame and grate)

RECTANGULAR FRAME DETAILS

(For all rectangular grates)

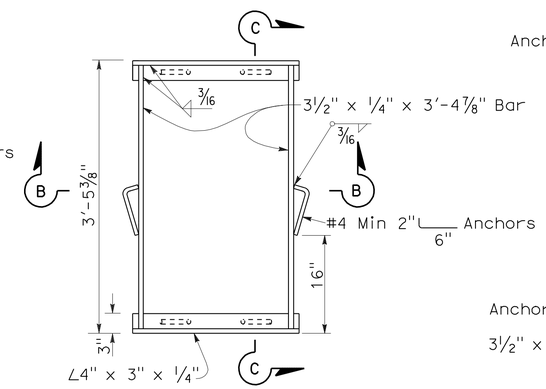

TYPICAL FRAME

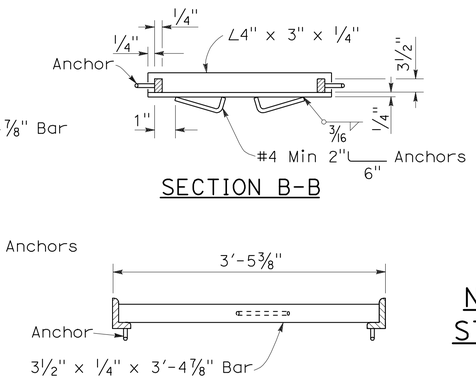

SECTION B-B

SECTION C-C

ALTERNATIVE ANCHOR FOR RECTANGULAR FRAME

(For details not shown, See Rectangular Frame Details)

GRATE BAR SPACING TABLE

TYPE	No. OF BARS	CLEAR BAR SPACING	X
18-9	9	1⅜"	1 1/16"
24-9	9	2"	1 9/16"
24-12	12	1⅜"	1¼"

INLET TYPE	COVER TYPE	WEIGHT LB
OS	PLATE	174
OL-7	PLATE	170
OL-10	PLATE	170
OL-14	PLATE	170
OL-21	PLATE	170
OCP	PLATE	112
OCPI	PLATE	112
OCPI	REDWOOD	42
OMP	PLATE	177
OMPI	PLATE	177

INLET TYPE	GRATE TYPE	No. OF GRATES	WEIGHT LB
GDO	24-12	2	634
GOL-7	24-12	1	326
GOL-10	24-12	1	326
GO,G1,G2,G3,G4 (TYPE 24)	24-9	1	263
	24-12	1	326
G4 (TYPE 18),G5,G6	18-9	1	249
GT1	18-9	2	498
GT2	18-9	2	498
GT3	24-12	2	652
GT4	24-12	2	652
TRASH RACK			22

BASIS FOR MISC IRON & STEEL FINAL PAY WEIGHTS FOR DRAINAGE INLETS

(See General Notes, No 8)

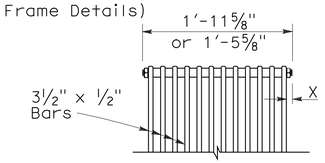

BOLTED END BLOCK

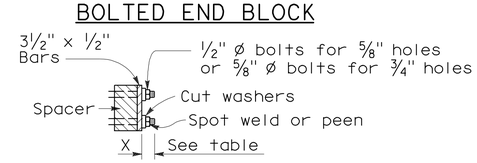

BOLTING DETAIL

ALTERNATIVE BOLTED GRATE

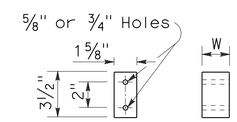

BAR SPACER

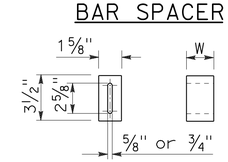

ALTERNATIVE SPACER

W = 1⅜" or 2"

STATE OF CALIFORNIA
DEPARTMENT OF TRANSPORTATION

GRATE DETAILS

NO SCALE

RSP D77A DATED JANUARY 18, 2008 SUPERSEDES STANDARD PLAN D77A
DATED MAY 1, 2006 - PAGE 155 OF THE STANDARD PLANS BOOK DATED MAY 2006.

REVISED STANDARD PLAN RSP D77A

2006 REVISED STANDARD PLAN RSP D77A

12-14-07

DIST	COUNTY	ROUTE	POST MILES TOTAL PROJECT	SHEET NO.	TOTAL SHEETS
12	Ora	5	5.6/6.6	100	154

LICENSED LANDSCAPE ARCHITECT

June 5, 2009
PLANS APPROVAL DATE

LICENSED LANDSCAPE ARCHITECT — Gregory A. Balzer 2576 — 10 (Renewal) 2-28-11 (Renewal Date) 5-14-09 (Date) — STATE OF CALIFORNIA

The State of California or its officers or agents shall not be responsible for the accuracy or completeness of electronic copies of this plan sheet.

To accompany plans dated 2-14-11

A

AB	aggregate base
ABS	acrylonitrile-butadiene-styrene
AC	asphalt concrete
Adj	adjacent/adjustable
AIC	auxiliary irrigation controller
Alt	alternative
AMEND	amendment
ARV	air release valve
AUTO	automatic
AUX	auxiliary
AVB	atmospheric vacuum breaker

B

B&B	balled and burlapped
B/B	brass/bronze
B/B/PL	brass/bronze/plastic
B/PL	brass/plastic
BFM	bonded fiber matrix
Bit Ctd	bituminous coated
BP	booster pump
BPA	backflow preventer assembly
BPAE	backflow preventer assembly in enclosure
BPE	backflow preventer enclosure
BV	ball valve

C

CAP	corrugated aluminum pipe
CARV	combination air release valve
CCA	cam coupler assembly
CEC	controller enclosure cabinet
CHDPE	corrugated high density polyethylene
CL	chain link
CNC	control and neutral conductors
Conc	concrete
Cond	conduit
CSP	corrugated steel pipe
CST	center strip
CV	check valve

D

Dia	diameter
DIP	ductile iron pipe
DN	diameter nominal

E

EA	each
Elect	electric/electrical
Elev	elevation
ENCL	enclosure
EP	edge of pavement
ES	edge of shoulder
EST	end strip
ESTB	establishment
ETW	edge of traveled way

F

F	full circle
F/P	full/part circle
FAU	filter assembly unit
FCV	flow control valve
FERT	fertilizer
FG	finished grade
FIPT	female iron pipe thread
FIS	fertilizer injector system
FL	flow line
FM	flow monitor
FS	flow sensor
Ft	foot/feet
FV	flush valve

G

GAL	Gallon(s)
Galv	galvanized
GARV	garden valve
GPH	gallons per hour
GPM	gallons per minute
GSP	galvanized steel pipe
GV	gate valve

H

H	half circle
HB	hose bib
HDPE	high density polyethylene
HP	horsepower/hinge point
HPL	high pressure line
Hwy	highway

I

IC	irrigation controller
ICC	irrigation controller(s) in controller enclosure cabinet
ID	inside diameter
In	inches
IFS	irrigation filtration system
IPS	iron pipe size
IPT	iron pipe thread
Irr	irrigation

L

L	length
LF	linear foot

M

Max	maximum
MBGR	metal beam guard railing
MCV	manual control valve
MIC	master irrigation controller
Min	minimum
MIPT	male iron pipe thread
Misc	miscellaneous
Mtl	material
MVP	maintenance vehicle pullout

N

NCN	no common name
NL	nozzle line
No.	number
NPT	national pipe thread

O

O/C	on center
OD	outside diameter
Oz	ounce

P

P	part circle
PB	pull box
PCC	portland cement concrete
PE	polyethylene
Pkt	packet
PL	plastic
PLT	plant/planting
PLT ESTB	plant establishment
PM	post mile
PR	pressure rated
PRLV	pressure relief valve
PSFM	polymer stabilized fiber matrix
PSI	pounds per square inch
PRV	pressure reducing valve
PVC	polyvinyl chloride
Pvmt	pavement

Q

Q	quarter circle
QCV	quick coupling valve

R

R	radius
RCP	reinforced concrete pipe
RCV	remote control valve
RCVM	remote control valve (master)
RCVMF	remote control valve (master) w/ flow meter
RCW	recycled/reclaimed water
RECP	rolled erosion control product
REQ	required
R/W	right of way

S

S	slip
SCC	sprinkler control conduit
SCH	schedule
SF	state-furnished
Shld	shoulder
SQFT	square foot/feet
SQYD	square yard(s)
SST	side strip
Sta	station
Std	standard
SW	sidewalk/sound wall

T

T	third circle/thread
TLS	truck loading standpipe
TQ	three quarter circle
TRM	turf reinforcement mat
TRVD	traveled
TT	two third circle
Typ	typical

U

UG	underground

V

VAU	valve assembly unit

W

W	width
W/	with
WM	water meter
WS	wye strainer
WSP	welded steel pipe
WWM	welded wire mesh

NOTE:

FOR ADDITIONAL ABBREVIATIONS, SEE STANDARD PLANS A10A AND A10B.

STATE OF CALIFORNIA
DEPARTMENT OF TRANSPORTATION

PLANTING AND IRRIGATION ABBREVIATIONS

NO SCALE

RSP H1 DATED JUNE 5, 2009 SUPERSEDES STANDARD PLAN H1
DATED MAY 1, 2006 - PAGE 201 OF THE STANDARD PLANS BOOK DATED MAY 2006.

REVISED STANDARD PLAN RSP H1

2006 REVISED STANDARD PLAN RSP H1