| Dist | COUNTY | ROUTE | POST MILES TOTAL PROJECT | SHEET No. | TOTAL SHEETS |
|---|---|---|---|---|---|
| 12 | Ora | 1 | 22.0/29.9 | 54 | 126 |

Mina Zolfaghari 06-06-16
REGISTERED ELECTRICAL ENGINEER DATE

06-13-16
PLANS APPROVAL DATE

REGISTERED PROFESSIONAL ENGINEER MINA ZOLFAGHARI No. E16816 Exp. 12-31-16 ELECTRICAL STATE OF CALIFORNIA

*THE STATE OF CALIFORNIA OR ITS OFFICERS OR AGENTS SHALL NOT BE RESPONSIBLE FOR THE ACCURACY OR COMPLETENESS OF SCANNED COPIES OF THIS PLAN SHEET.*

## CONDUCTOR AND CONDUIT SCHEDULE

| CONDUCTOR | CONDUCTOR RUN | 1 | 2 | 3 | 4 | 5 | 6 | 7 | 8 | 9 | 10 | 11 | 12 | 13 | 14 | 15 |
|---|---|---|---|---|---|---|---|---|---|---|---|---|---|---|---|---|
| 12CSC | VEHICLE SIGNALS | 1 | 2 | 3 | 1 | 5 | 5 | 1 | | 1 | 2 | 3 | 1 | 4 | 6 | 10 |
| 3CSC | PPB, BPB | | 1 | 4 | 1 | 7 | 7 | | | | 2 | 3 | 2 | 6 | 7 | 13 |
| #6 | SERVICE | | | | | | | | | | | | | | | 2 |
| #8 | LUMINAIRE | 2 | 2 | 2 | 2 | 2 | 2 | | | | | 2 | 2 | 2 | 2 | |
| #8 | BARE GROUNDING | 1 | 1 | 1 | 1 | 2 | 2 | 1 | | 1 | | 1 | 1 | 2 | 3 | 3 |
| #10 | IISNS | 2 | 2 | 2 | 2 | 2 | 2 | | | | | 2 | | 2 | 2 | |
| 9#20 | APS | 1 | | 1 | 1 | | | | | | 2 | | 1 | | | |
| DLC | Ø1 DETECTOR | | | | | | | 2 | | 2 | 2 | 2 | | 2 | | 2 |
| | Ø2 DETECTOR | | | | | 2 | 2 | | | | | | | | 2 | 2 |
| | Ø3 DETECTOR | | | 2 | | 2 | 2 | | | | | | | | 2 | 2 |
| | Ø4 DETECTOR | | | | | | | | | | | | 1 | 1 | | 1 |
| | Ø5 DETECTOR | | | | | | 1 | | | | | | | | 1 | 1 |
| | Ø6 DETECTOR | | | | | | | | | 2 | 2 | 2 | | 2 | | 2 |
| | Ø7 DETECTOR | | | | | | | | | | | | 1 | 1 | | 1 |
| | Ø8 DETECTOR | | 2 | 3 | | 3 | 3 | | | | | | | | 3 | 3 |
| 12-PAIR #19 SIC | | | | | | | | | 1(E) | | | | | | | 1 (E) |
| 4-PAIR #18 SIC | | | | | | | | | | | | | | | | 1 (E) |
| 4#20 EVC | | 1 | 1 | 1 | 1 | 2 | 2 | | | | | 1 | | 1 | 3 | 4 |
| CONDUIT SIZE | | 2" | 3" | 4 " | 2½" | 2-4" | 2-4" | 2" | 2"(E) | 2" | 2" | 4" | 2" | 2-4" | 3-4" | 3-4" (E) |

ALL CONDUCTORS AND CONDUITS ARE NEW UNLESS OTHERWISE NOTED
(E) = EXISTING

## STANDARD AND EQUIPMENT SCHEDULE (*)

| | STANDARD | | | | VEH SIG MTG | | | PED SIGNAL | | | APS | BPB | | LUMINAIRE LED | SPECIAL REQUIREMENTS |
|---|---|---|---|---|---|---|---|---|---|---|---|---|---|---|---|
| ⊗ | TYPE | SMA | LMA | Ø | MAST ARM | Ø | POLE | Ø | MTG | Ø | ARROW | Ø | ARROW | | |
| A | 19A-4-100 | 25′ | 12′ | 2 | MAS | 2 | SV-1-T | 2 | SP-1-T | – | – | – | – | 235 W | Warner Ave |
| B | 21TS | – | 12′ | – | – | OLA 7 | SV-2-TA | – | – | 2 | → | – | – | 235 W | – |
| C | PPB POST (E) | – | – | – | – | – | – | – | – | 2 8 (E) | ↔ → (E) | – | – | – | – |
| D | 1-A | – | – | | – | 7 8 | TV-2-T | 8 | SP-1-T | 2 | ← | 8 | ← | – | – |
| E | 29A-5-100 | 35′ | 15′ | 4 7 | MAS MAT | 4 | SV-1-T | 4 | SP-1-T | 2 | ← | – | – | 235 W | Pacific Coast Highway |
| F | 1-A (E) | – | – | – | – | 1 2 (E) | TV-2-T (E) | 2 | SP-1-T (E) | 4 (E) | → (E) | 2 (E) | ← (E) | – | – |
| G | 29A-5-100 | 40′ | 15′ | 6 1 | MAS MAT | 6 | SV-1-T | – | – | – | – | – | – | 235 W | Warner Ave |
| H | PPB POST (E) | – | – | – | – | – | – | – | – | 4 (E) | ← (E) | – | – | – | – |
| I | 1-A (4′-6") | – | – | – | – | – | – | 4 6 | TP-2-T | 4 | → | – | – | – | – |
| J | 21TS (E) | – | 12′ (E) | – | – | 4 3 (E) | SV-2-TA (E) | – | – | 6 (E) | → (E) | 4 (E) | ← (E) | 135 W (E) | – |
| K | 24A-4-100 (E) | 35′ (E) | 12′ (E) | 3 8 (E) | 2-MAS (E) | 8 (E) | SV-1-T (E) | 8 (E) | SP-1-T (E) | 6 (E) | ← (E) | – | – | 135 W (E) | Pacific Coast Highway (E) |
| L | PPB POST (E) | – | – | – | – | – | – | – | – | 6 (E) | ← (E) | – | – | – | – |
| M | 1-A (E) | – | – | – | – | 5 6 (E) | TV-2-T (E) | 6 (E) | SP-1-T (E) | 8 (E) | → (E) | 6 (E) | ← (E) | – | – |
| N | 33 ** | – | | – | – | OLA 5 | SV-2-TA | – | – | – | – | – | – | – | – |

1

(*) = ALL STANDARD AND EQUIPMENTS ARE NEW UNLESS OTHERWISE NOTED.
(E) = EXISTING

1 ** = SEE SHEET E-17A

1 **REPLACED PER ADDENDUM No. 1 DATED SEPTEMBER 15, 2016**

# MODIFYING EXISTING ELECTRICAL SYSTEM

NO SCALE

*APPROVED FOR ELECTRICAL WORK ONLY*

**E-3**

STATE OF CALIFORNIA - DEPARTMENT OF TRANSPORTATION
Caltrans ELECTRICAL DESIGN
FUNCTIONAL SUPERVISOR: SHAHRAM SHAHRIARI
CALCULATED-DESIGNED BY: MINA ZOLFAGHARI
CHECKED BY: VANESSA TRUONG
REVISED BY: MZ
DATE REVISED: 05-30-13

LAST REVISION 06-06-16 | DATE PLOTTED => 13-SEP-2016 | TIME PLOTTED => 10:29

| Dist | COUNTY | ROUTE | POST MILES TOTAL PROJECT | SHEET No. | TOTAL SHEETS |
|---|---|---|---|---|---|
| 12 | Ora | 1 | 22.0/29.9 | 56 | 126 |

Mina Zolfaghari 06-03-16
REGISTERED ELECTRICAL ENGINEER DATE

06-13-16
PLANS APPROVAL DATE

REGISTERED PROFESSIONAL ENGINEER MINA ZOLFAGHARI No. E 16816 Exp. 12/31/16 ELECTRICAL STATE OF CALIFORNIA

*THE STATE OF CALIFORNIA OR ITS OFFICERS OR AGENTS SHALL NOT BE RESPONSIBLE FOR THE ACCURACY OR COMPLETENESS OF SCANNED COPIES OF THIS PLAN SHEET.*

NOTES (THIS SHEET ONLY):

1. FOR ACCURATE RIGHT OF WAY DATA, CONTACT RIGHT OF WAY ENGINEERING AT THE DISTRICT OFFICE.
2. PROVIDE A MINIMUM CLEARANCE OF 36" FROM FACE OF CURB TO FACE OF FIXED OBJECTS INSIDE CURB RETURNS AND NEAR DRIVEWAYS; A MINIMUM CLEARANCE OF 18" ELSEWHERE.
3. PROVIDE A MINIMUM 48" FLAT, SQUARE AREA FOR APS ACCESSIBILITY.
4. MAINTAIN A MINIMUM CLEARANCE OF 48" FOR WALKWAY.
5. ALL NEW LOOPS SHALL BE INSTALLED AFTER THE FINAL PAVEMENT AND AFTER PAVEMENT DELINEATION AND SHALL BE CUT 1' BEFORE LIMIT LINE.
6. FOR CONDUIT AND CONDUCTOR SHEDULE AND STANDARD AND EQUIPMENT SCHEDULE SEE SHEET E-6.

# MODIFYING SIGNAL AND LIGHTING

## (LOCATION 2)

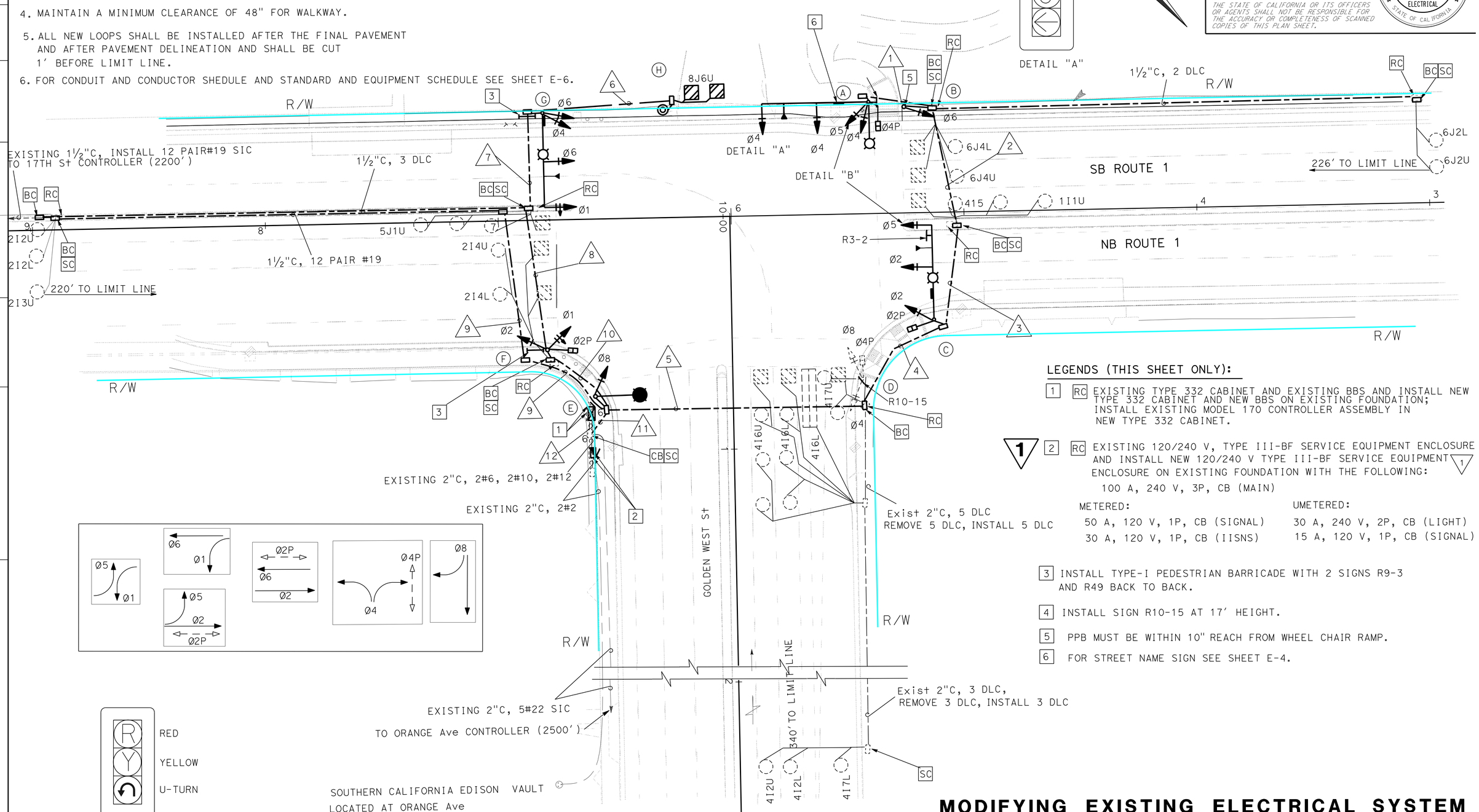


LEGENDS (THIS SHEET ONLY):

1 RC EXISTING TYPE 332 CABINET AND EXISTING BBS AND INSTALL NEW TYPE 332 CABINET AND NEW BBS ON EXISTING FOUNDATION; INSTALL EXISTING MODEL 170 CONTROLLER ASSEMBLY IN NEW TYPE 332 CABINET.

1 2 RC EXISTING 120/240 V, TYPE III-BF SERVICE EQUIPMENT ENCLOSURE AND INSTALL NEW 120/240 V TYPE III-BF SERVICE EQUIPMENT ENCLOSURE ON EXISTING FOUNDATION WITH THE FOLLOWING: 1

100 A, 240 V, 3P, CB (MAIN)

| METERED: | UMETERED: |
|---|---|
| 50 A, 120 V, 1P, CB (SIGNAL) | 30 A, 240 V, 2P, CB (LIGHT) |
| 30 A, 120 V, 1P, CB (IISNS) | 15 A, 120 V, 1P, CB (SIGNAL) |

3 INSTALL TYPE-I PEDESTRIAN BARRICADE WITH 2 SIGNS R9-3 AND R49 BACK TO BACK.

4 INSTALL SIGN R10-15 AT 17' HEIGHT.

5 PPB MUST BE WITHIN 10" REACH FROM WHEEL CHAIR RAMP.

6 FOR STREET NAME SIGN SEE SHEET E-4.

1 **REPLACED PER ADDENDUM No. 1 DATED SEPTEMBER 15, 2016**

*APPROVED FOR ELECTRICAL WORK ONLY*

## MODIFYING EXISTING ELECTRICAL SYSTEM

SCALE: 1" = 20'

**E-5**

REVISED BY | DATE REVISED
MINA ZOLFAGHARI | VANESSA TRUONG
CALCULATED-DESIGNED BY | CHECKED BY
FUNCTIONAL SUPERVISOR | SHAHRAM SHAHRIARI

STATE OF CALIFORNIA - DEPARTMENT OF TRANSPORTATION
Caltrans® ELECTRICAL DESIGN

LAST REVISION 06-03-16 | DATE PLOTTED => 13-SEP-2016 | TIME PLOTTED => 10:29

| Dist | COUNTY | ROUTE | POST MILES TOTAL PROJECT | SHEET No. | TOTAL SHEETS |
|---|---|---|---|---|---|
| 12 | Ora | 1 | 22.0/29.9 | 59 | 126 |

Mina Zolfaghari 06-06-16
REGISTERED ELECTRICAL ENGINEER DATE

06-13-16
PLANS APPROVAL DATE

REGISTERED PROFESSIONAL ENGINEER MINA ZOLFAGHARI No. E16816 Exp. 12-31-16 ELECTRICAL STATE OF CALIFORNIA

*THE STATE OF CALIFORNIA OR ITS OFFICERS OR AGENTS SHALL NOT BE RESPONSIBLE FOR THE ACCURACY OR COMPLETENESS OF SCANNED COPIES OF THIS PLAN SHEET.*

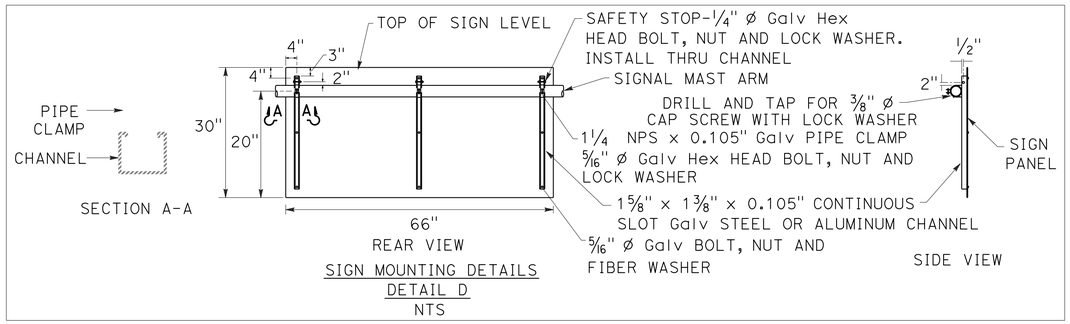


SIGN MOUNTING DETAILS
DETAIL D
NTS

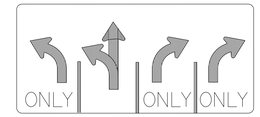


DETAIL "C"
NTS
FOR INSTALLATION SEE DETAIL D

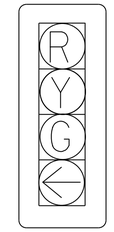


DETAIL "A"
NTS

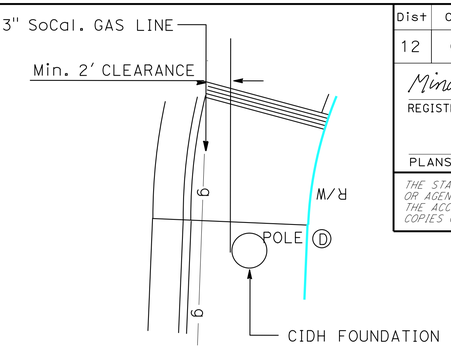


"DETAIL B" (NO SCALE)




PHASE DIAGRAM

## MODIFYING SIGNAL AND LIGHTING (LOCATION 3)

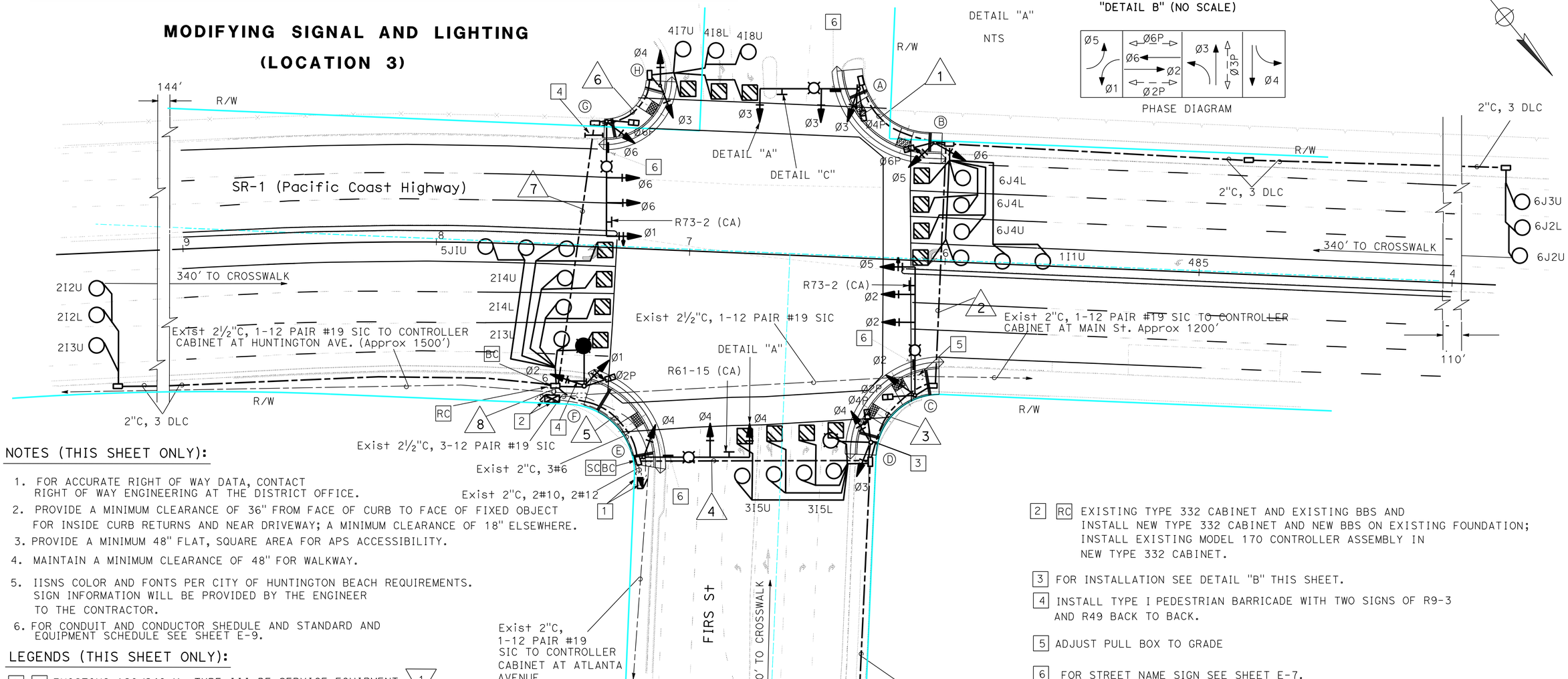


### NOTES (THIS SHEET ONLY):

1. FOR ACCURATE RIGHT OF WAY DATA, CONTACT RIGHT OF WAY ENGINEERING AT THE DISTRICT OFFICE.
2. PROVIDE A MINIMUM CLEARANCE OF 36" FROM FACE OF CURB TO FACE OF FIXED OBJECT FOR INSIDE CURB RETURNS AND NEAR DRIVEWAY; A MINIMUM CLEARANCE OF 18" ELSEWHERE.
3. PROVIDE A MINIMUM 48" FLAT, SQUARE AREA FOR APS ACCESSIBILITY.
4. MAINTAIN A MINIMUM CLEARANCE OF 48" FOR WALKWAY.
5. IISNS COLOR AND FONTS PER CITY OF HUNTINGTON BEACH REQUIREMENTS. SIGN INFORMATION WILL BE PROVIDED BY THE ENGINEER TO THE CONTRACTOR.
6. FOR CONDUIT AND CONDUCTOR SHEDULE AND STANDARD AND EQUIPMENT SCHEDULE SEE SHEET E-9.

### LEGENDS (THIS SHEET ONLY):

1 RC EXISTING 120/240 V, TYPE III-BF SERVICE EQUIPMENT ENCLOSURE AND INSTALL NEW 120/240 V TYPE III-BF SERVICE EQUIPMENT ENCLOSURE ON EXISTING FOUNDATION WITH THE FOLLOWING: (1)

METERED:
- 100 A, 240 V, 3P, CB (MAIN)
- 50 A, 120 V, 31P, CB (SIGNAL)
- 20 A, 120 V, 1P, CB (IISNS)

UNMETERED:
- 30 A, 120 V, 1P, CB (LIGHTING)
- 15 A, 120 V, 1P, CB (PEC)

(1) **REPLACED PER ADDENDUM No. 1 DATED SEPTEMBER 15, 2016**

2 RC EXISTING TYPE 332 CABINET AND EXISTING BBS AND INSTALL NEW TYPE 332 CABINET AND NEW BBS ON EXISTING FOUNDATION; INSTALL EXISTING MODEL 170 CONTROLLER ASSEMBLY IN NEW TYPE 332 CABINET.

3 FOR INSTALLATION SEE DETAIL "B" THIS SHEET.

4 INSTALL TYPE I PEDESTRIAN BARRICADE WITH TWO SIGNS OF R9-3 AND R49 BACK TO BACK.

5 ADJUST PULL BOX TO GRADE

6 FOR STREET NAME SIGN SEE SHEET E-7.

*APPROVED FOR ELECTRICAL WORK ONLY*

## MODIFYING EXISTING ELECTRICAL SYSTEM

SCALE : 1"=20'

**E-8**

STATE OF CALIFORNIA - DEPARTMENT OF TRANSPORTATION
Caltrans
ELECTRICAL DESIGN

FUNCTIONAL SUPERVISOR: SHAHRAM SHAHRIARI
CALCULATED-DESIGNED BY: MINA ZOLFAGHARI
CHECKED BY: VANESSA TRUONG
REVISED BY: MZ
DATE REVISED: 05-30-13

LAST REVISION 06-06-16
DATE PLOTTED => 13-SEP-2016
TIME PLOTTED => 10:29

| Dist | COUNTY | ROUTE | POST MILES TOTAL PROJECT | SHEET No. | TOTAL SHEETS |
|---|---|---|---|---|---|
| 12 | Ora | 1 | 22.0/29.9 | 61 | 126 |

Mina Zolfaghari 06-06-16
REGISTERED ELECTRICAL ENGINEER DATE

06-13-16
PLANS APPROVAL DATE

REGISTERED PROFESSIONAL ENGINEER MINA ZOLFAGHARI No. E16816 Exp. 12-31-16 ELECTRICAL STATE OF CALIFORNIA

*THE STATE OF CALIFORNIA OR ITS OFFICERS OR AGENTS SHALL NOT BE RESPONSIBLE FOR THE ACCURACY OR COMPLETENESS OF SCANNED COPIES OF THIS PLAN SHEET.*

NOTE (THIS SHEET ONLY):

1. FOR ACCURATE RIGHT OF WAY DATA, CONTACT RIGHT OF WAY ENGINEERING AT THE DISTRICT OFFICE.

## EXISTING STANDARD AND EQUIPMENT SCHEDULE

| STANDARD | | | | VEH SIG MTG | | | | PED SIGNAL | | PPB | | LUMINAIRE | SPECIAL REQUIREMENTS |
|---|---|---|---|---|---|---|---|---|---|---|---|---|---|
| ⊗ | TYPE | SMA | LMA | Ø | MAST ARM | Ø | POLE | Ø | MTG | Ø | ARROW | | |
| A | 29-5-70 | 55′ | 15′ | | 2-MAS MAT | | SV-1-T | | SP-1-T | 8 | ← | 310 W | NEWLAND St |
| B | 1A | - | - | - | - | | TV-2-T | | SP-1-T | 2/8 | → | - | - |
| C | 19-4-100 | 30′ | 15′ | | MAT | | SV-1-T | | SP-1-T | 2 | ← | 310 W | PACIFIC COAST Hwy |
| D | 1A | - | - | - | - | | TV-2-T | | SP-1-T | 4 | → | - | - |
| E | 29-5-70 | 55′ | 15′ | | 2-MAS MAT | | SV-1-T | | SP-1-T | 4 | ← | 310 W | NEWLAND St |
| F | 1A | - | - | - | - | | TV-2-T | | SP-1-T | 6 | → | - | - |
| G | 17B-2-70 | 15′ | 12′ | | MAT | | SV-2-TA | | SP-1-T | 6 | ← | 310 W | PACIFIC COAST Hwy |
| H | 1A | - | - | - | - | | TV-2-T | | SP-1-T | 8 | → | - | - |

## LEGENDS ( THIS SHEET ONLY):

1 [RC] EXISTING 120/240 V, METERED TYPE III-BF SERVICE ENCLOSURE AND INSTALL NEW 120/402 V, METERED TYPE III-BF SERVICE EQUIPMENT ENCLOSURE ON EXISTING FOUNDATION WITH THE FOLLOWING:

100 A, 240 V, 2P, CB FOR MAIN
50 A, 120 V, 1P, CB FOR SIGNAL
15 A, 120 V, 1P, CB FOR IISNS
30 A, 240 V, 2P, CB FOR LIGHTING (UNMETERED)

2 [RC] EXISTING MODEL 170 CONTROLLER ASSEMBLY AND BATTERY BACKUP SYSTEM.

3 INSTALL DEPARTMENT-FURNISHED MODEL 2070L CONTROLLER ASSEMBLY IN MODEL 332 CABINET AND BATTERY BACKUP SYSTEM (BBS). FOR DETAIL SEE SHEET E-18.

4 EXISTING 2"C, 12 PAIR #19, REMOVE 12 PAIR #19 SIC AND INSTALL NEW 12 PAIR #19 SIC TO CONTROLLER CABINET AT MAGNOLIA STREET APPROXIMATE 2800 FEET.

5 EXISTING 2"C, 12 PAIR #19 SIC, PULL BACK 12 PAIR #19 SIC AND INSTALL INTO NEW CONDUIT.

6 EXISTING 2"C, 12 PAIR #19 SIC TO CONTROLLER CABINET AT BEACH BLVD.

## MODIFYING SIGNAL AND LIGHTING (LOCATION 4)

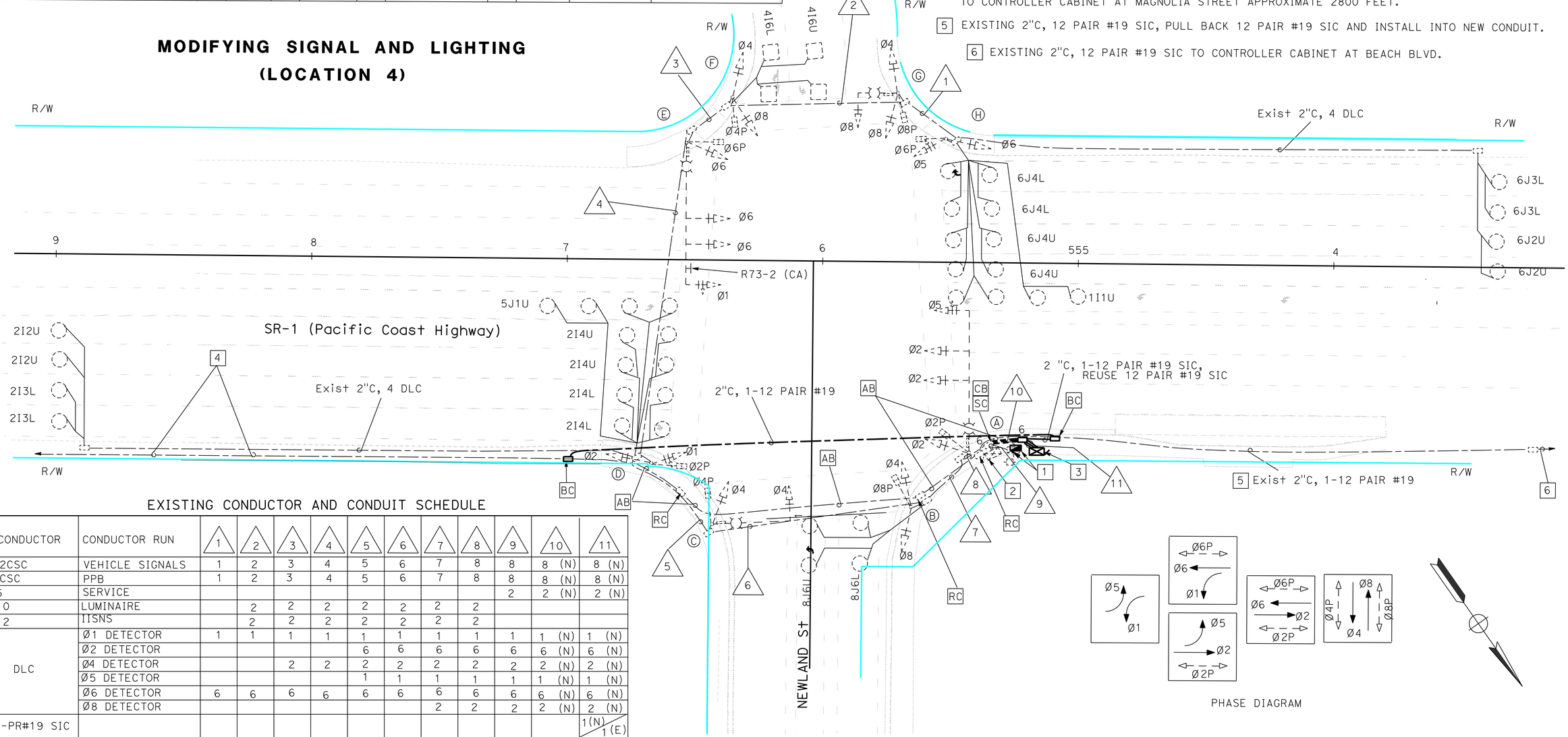


EXISTING CONDUCTOR AND CONDUIT SCHEDULE

| CONDUCTOR | CONDUCTOR RUN | 1 | 2 | 3 | 4 | 5 | 6 | 7 | 8 | 9 | 10 | 11 |
|---|---|---|---|---|---|---|---|---|---|---|---|---|
| 12CSC | VEHICLE SIGNALS | 1 | 2 | 3 | 4 | 5 | 6 | 7 | 8 | 8 | 8 (N) | 8 (N) |
| 3CSC | PPB | 1 | 2 | 3 | 4 | 5 | 6 | 7 | 8 | 8 | 8 (N) | 8 (N) |
| #6 | SERVICE | | | | | | | | | 2 | 2 (N) | 2 (N) |
| #10 | LUMINAIRE | | 2 | 2 | 2 | 2 | 2 | 2 | 2 | | | |
| #12 | IISNS | | 2 | 2 | 2 | 2 | 2 | 2 | 2 | | | |
| DLC | Ø1 DETECTOR | 1 | 1 | 1 | 1 | 1 | 1 | 1 | 1 | 1 | 1 (N) | 1 (N) |
| | Ø2 DETECTOR | | | | | 6 | 6 | 6 | 6 | 6 | 6 (N) | 6 (N) |
| | Ø4 DETECTOR | | | 2 | 2 | 2 | 2 | 2 | 2 | 2 | 2 (N) | 2 (N) |
| | Ø5 DETECTOR | | | | | 1 | 1 | 1 | 1 | 1 | 1 (N) | 1 (N) |
| | Ø6 DETECTOR | 6 | 6 | 6 | 6 | 6 | 6 | 6 | 6 | 6 | 6 (N) | 6 (N) |
| | Ø8 DETECTOR | | | | | | | 2 | 2 | 2 | 2 (N) | 2 (N) |
| 12-PR#19 SIC | | | | | | | | | | | | 1(N)/1(E) |
| CONDUIT SIZE | | 3" | 3" | 3" | 3" | 3" | 3" | 3" | 3" | 2-3" | 3-4"(N) | 3-4"(N) |

(N) = NEW
(E) = EXISTING

1 **REPLACED PER ADDENDUM No. 1 DATED SEPTEMBER 15, 2016**
*APPROVED FOR ELECTRICAL WORK ONLY*

## MODIFYING EXISTING ELECTRICAL SYSTEM

SCALE : 1"=20′

**E-10**

STATE OF CALIFORNIA - DEPARTMENT OF TRANSPORTATION
Caltrans® **ELECTRICAL DESIGN**

FUNCTIONAL SUPERVISOR: SHAHRAM SHAHRIARI
CALCULATED-DESIGNED BY: MINA ZOLFAGHARI
CHECKED BY: VANESSA TRUONG
REVISED BY: MZ
DATE REVISED: 05-30-13

LAST REVISION 06-03-16
DATE PLOTTED => 13-SEP-2016
TIME PLOTTED => 10:29

| Dist | COUNTY | ROUTE | POST MILES TOTAL PROJECT | SHEET No. | TOTAL SHEETS |
|---|---|---|---|---|---|
| 12 | Ora | 1 | 22.0/29.9 | 68A | 126 |

1

REGISTERED CIVIL ENGINEER 09-09-16 DATE

09-09-16

PLANS APPROVAL DATE

REGISTERED PROFESSIONAL ENGINEER SEYED H. HASHEMI No. C71288 Exp. 12/31/17 CIVIL STATE OF CALIFORNIA

*THE STATE OF CALIFORNIA OR ITS OFFICERS OR AGENTS SHALL NOT BE RESPONSIBLE FOR THE ACCURACY OR COMPLETENESS OF SCANNED COPIES OF THIS PLAN SHEET.*

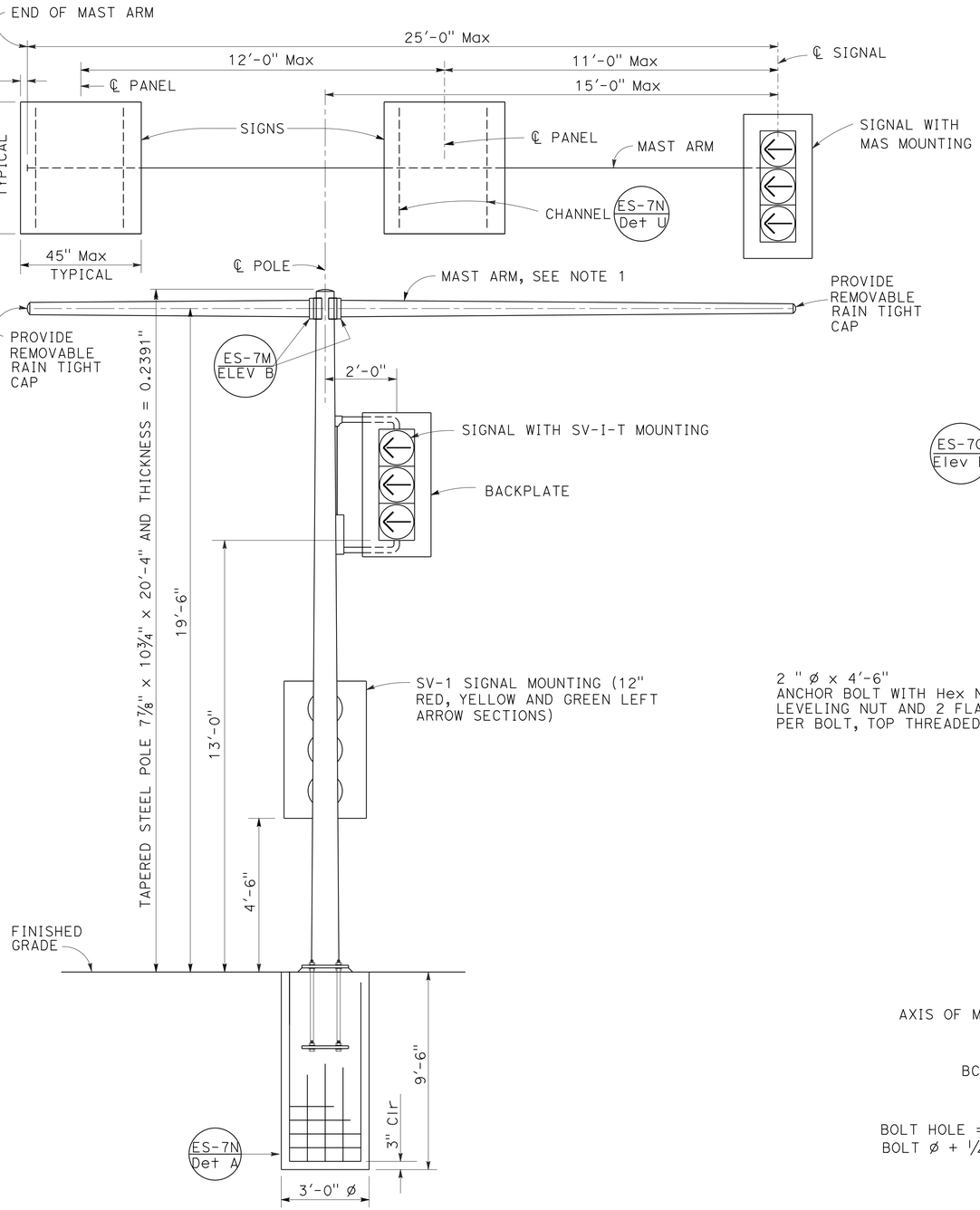


ELEVATION A

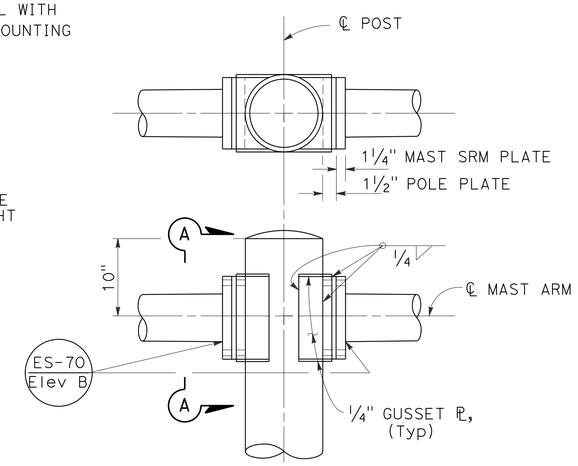


MAST ARM CONNECTION

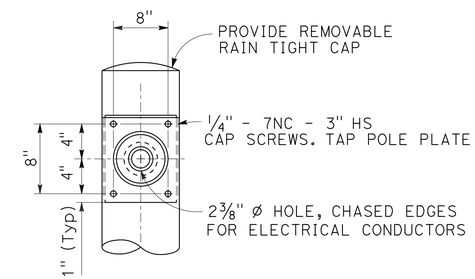


VIEW A-A

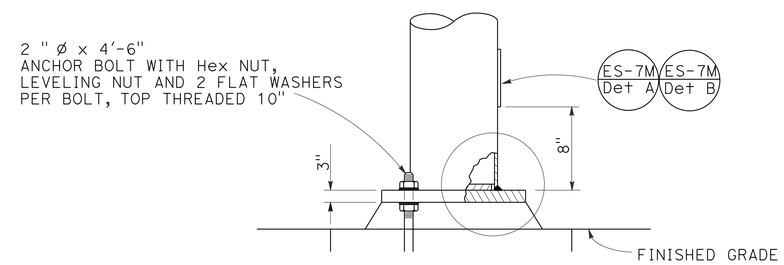


ELEVATION B

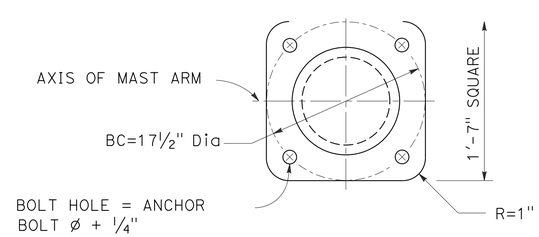


BASE PLATE
DETAIL B

## NOTES:

1. Round tapered steel tube thickness 0.1793" with maximum taper of 0.143-inch per foot and 7⅜" OD minimum at pole.
2. Cap screws shall be tightened by the turn-of-nut method, 1/3 turn from snug tight condition. No washer will be required.
3. For mast arm lengths, signs or signals required on each side of ℄ pole, see Signal plans.
4. Signal mounted on mast arm shall be MAS mounted on pipe tenon, see detail S on Standard Plan ES-7M.
5. Sign area shall not exceed 14.0 square feet for each sign.
6. If 2 signs are placed on one side of pole, one sign must be placed adjacent to pole.

1 **ADDED PER ADDENDUM No. 1 DATED SEPTEMBER 15, 2016**

# ELECTRICAL SYSTEMS (SIGNAL AND SIGN STANDARD TYPE 33 LEFT TURN)

NO SCALE

**E-17A**

STATE OF CALIFORNIA - DEPARTMENT OF TRANSPORTATION
Caltrans®
DESIGN

FUNCTIONAL SUPERVISOR: SON NGUYEN
CALCULATED-DESIGNED BY: SEYED H. HASHEMII
CHECKED BY: MINA ZOLFAGARI
REVISED BY
DATE REVISED

LAST REVISION 09-09-16
DATE PLOTTED => 13-SEP-2016
TIME PLOTTED => 10:29

| Dist | COUNTY | ROUTE | POST MILES TOTAL PROJECT | SHEET No. | TOTAL SHEETS |
|---|---|---|---|---|---|
| 12 | Ora | 1 | 22.0/29.9 | 90A | 97 |

Theresa Gabriel
REGISTERED ELECTRICAL ENGINEER

October 30, 2015
PLANS APPROVAL DATE

REGISTERED PROFESSIONAL ENGINEER Theresa Aziz Gabriel No. E15129 Exp. 6-30-16 ELECTRICAL STATE OF CALIFORNIA

*THE STATE OF CALIFORNIA OR ITS OFFICERS OR AGENTS SHALL NOT BE RESPONSIBLE FOR THE ACCURACY OR COMPLETENESS OF SCANNED COPIES OF THIS PLAN SHEET.*

TO ACCOMPANY PLANS DATED 06-13-2016

2010 REVISED STANDARD PLAN RSP ES-2E

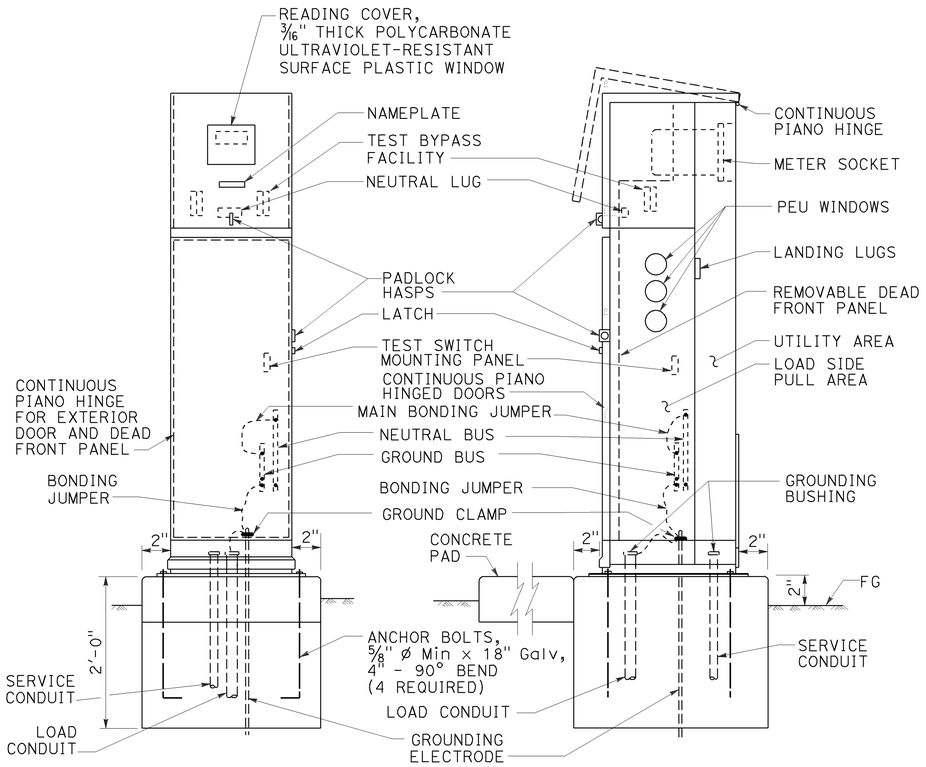


TYPE III-BF SERVICE EQUIPMENT ENCLOSURE (TYPICAL)

DETAIL A

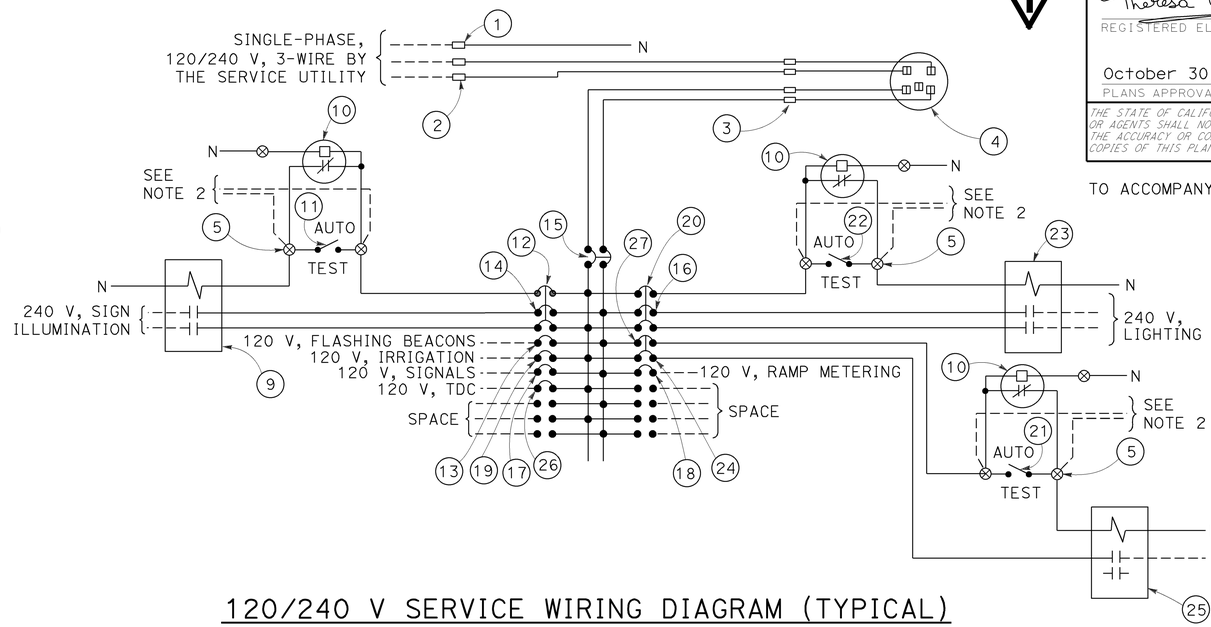


120/240 V SERVICE WIRING DIAGRAM (TYPICAL)

DETAIL C

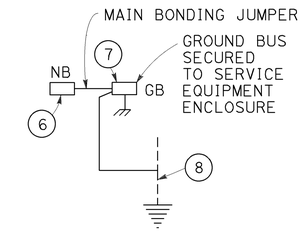


DETAIL D

| TYPE III-B SERVICE EQUIPMENT ENCLOSURE LEGEND (120/240 V) | | | | | |
|---|---|---|---|---|---|
| ITEM | COMPONENT | NAMEPLATE DESCRIPTION | ITEM | COMPONENT | NAMEPLATE DESCRIPTION |
| 1 | NEUTRAL LUG | | 14 | 30 A, 240 V, 2P, CB | SIGN ILLUMINATION |
| 2 | LANDING LUG | | 15 | 100 A, 240 V, 2P, CB | MAIN BREAKER |
| 3 | TEST BYPASS FACILITY | | 16 | 30 A, 240 V, 2P, CB | LIGHTING |
| 4 | METER SOCKET AND SUPPORT | | 17 | 50 A, 120 V, 1P, CB | SIGNALS |
| 5 | TERMINAL BLOCKS | | 18 | 30 A, 120 V, 1P, CB | RAMP METERING |
| 6 | NEUTRAL BUS | | 19 | 20 A, 120 V, 1P, CB | IRRIGATION |
| 7 | GROUND BUS | | 20 | 15 A, 120 V, 1P, CB | LIGHTING CONTROL |
| 8 | GROUNDING ELECTRODE | | 21 | 15 A, 1P, TEST SWITCH | IISNS TEST SWITCH |
| 9 | 30 A, 2P, NO CONTACTOR | SIGN ILLUMINATION | 22 | 15 A, 1P, TEST SWITCH | LIGHTING TEST SWITCH |
| 10 | PHOTOELECTRIC UNIT (NOTE 4) | PEU | 23 | 60 A, 2P, NO CONTACTOR | LIGHTING |
| 11 | 15 A, 1P, TEST SWITCH | SIGN ILLUMINATION TEST SWITCH | 24 | 15 A, 120 V, 1P, CB | IISNS |
| 12 | 15 A, 120 V, 1P, CB | SIGN ILLUMINATION CONTROL | 25 | 30 A, 2P, NO CONTACTOR | IISNS |
| 13 | 15 A, 120 V, 1P, CB | FLASHING BEACON | 26 | 20 A, 120 V, IP, CB | TELEPHONE DEMARCATION CABINET |
| | | | 27 | 15 A, 120 V, 1P, CB | IISNS CONTROL |

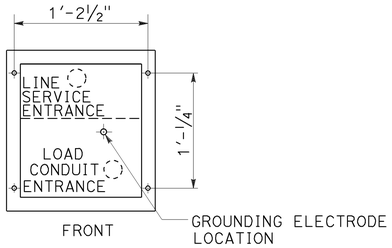


BASE FOR TYPE III-B SERVICE EQUIPMENT ENCLOSURE

DETAIL B

NOTES:

1. Unless otherwise indicated on the plans, service equipment items shall be provided for each service equipment enclosure as shown.
2. Connect to remote test switch mounted on lighting standards, sign post or structure when required.
3. Items 1 and 6 shall be isolated from the service equipment enclosure.
4. Type V photoelectric control shall be used unless otherwise indicated on the plans.
5. Item 12, 20 and 27 shall be ganged operated CB.

STATE OF CALIFORNIA
DEPARTMENT OF TRANSPORTATION

# ELECTRICAL SYSTEMS (SERVICE EQUIPMENT ENCLOSURE AND TYPICAL WIRING DIAGRAM, TYPE III-B SERIES)

NO SCALE

RSP ES-2E DATED OCTOBER 30, 2015 SUPERSEDES STANDARD PLAN ES-2E DATED MAY 20, 2011 - PAGE 432 OF THE STANDARD PLANS BOOK DATED 2010.

**REVISED STANDARD PLAN RSP ES-2E**

**1 ADDED PER ADDENDUM No. 1 DATED SEPTEMBER 15, 2016**

8-20-15