California Code of Regulations

Title 21, Division 2.5, Chapter 2.1

School Site Evaluation Criteria

Prepared by

California Department of Transportation

Division of Aeronautics, M.S. # 40

P.O. Box 942874

Sacramento, CA 94274-0001

(916) 654-4959

Gary Cathey

Division Chief

Effective

April 28, 2009

Page Intentionally Left Blank

California Code of Regulations

Title 21, Division 2.5, Chapter 2.1

SCHOOL SITE EVALUATION CRITERIA

3570 SCHOOL SITE EVALUATION CRITERIA

(a) The following definitions apply within these regulations:

(1) "Airport runway" means any runway, or potential runway included in an airport master plan, that would be within two nautical miles of any boundary of a proposed school site that a school district intends to acquire.

(2) "Forecast aviation activity" means a projection of future aviation activity included in an airport master plan; or a regional transportation plan or similar document; or as provided by an airport owner or operator during the course of an investigation as required by Education Code Section 17215.

(3) "Runway" means a defined rectangular surface on an airport prepared or suitable for the landing or takeoff of airplanes.

(b) The State Department of Transportation (Department) shall investigate a proposed school site after receiving a written notice from the State Department of Education (Education) that includes a scaled map accurately depicting the location and boundaries of the proposed school site relative to any airport runway.

(c) The Department's investigation shall consider, but is not limited to considering: comments relevant to the proposed site acquisition received from an airport owner and operator, an airport land use commission having jurisdiction, a local planning commission having jurisdiction, and other public entities, when appropriate; existing and forecast aviation activity for each airport runway; where the proposed school site lies relative to aircraft flight paths and aircraft generated noise; and consistency with an adopted airport land use plan, military airfield Air Installation Compatible Use Zone study, General Plan, and similar planning documents.

(d) Based upon its investigation, the Department shall evaluate whether or not a school in the proposed location would be consistent with the enabling statute's guiding principles of promoting the safety of pupils, comprehensive community planning, and the greater educational usefulness of school sites. The Department shall recommend against acquisition of any proposed school site that it determines may not provide an adequate level of safety or non-disruptive noise for students based on aviation safety and aircraft noise considerations at the proposed site.

(1) The Department shall object to the acquisition of a proposed school site that would be within any of the following areas for existing or forecast aviation activity:

(A) a runway protection zone, which is an area for a:
a. civilian runway that is depicted in Figure 1 and has dimensions as shown in Table 1
b. military runway that is depicted and has dimensions as in Figure 2

(B) 65 decibel annual Community Noise Equivalent Level (CNEL) aircraft noise contour, as defined in 21 CCR section 5001(d).

(2) The Department may object to the acquisition of a proposed school site that would be within any of the following areas for existing or forecast aviation activity:

(A) where aircraft approaching or departing an airport are expected to be below cruise flight altitude. These areas are substantially enclosed within the areas depicted in Figure 2 and described as:

1. inner approach/departure zone, where aircraft are typically 200 to 400 feet above runway elevation for straight-in arrivals or straight-out departures
2. inner turning zone, where aircraft are typically turning and descending for landing or turning and climbing for departure
3. outer approach/departure zone, where aircraft are generally below traffic pattern altitude and flying either an elongated traffic pattern or a published instrument approach procedure; this zone will be aligned with the extended runway centerline for an elongated traffic pattern and aligned with the published instrument approach procedure, when that procedure is not aligned with the extended runway centerline; each runway may have more than one outer approach/departure zone
4. sideline zone, where aircraft may lose directional control on takeoff
5. traffic pattern zone, includes all portions of an airport's designated traffic pattern and pattern entry routes

(B) where an adopted airport land use plan, military airfield Air Installation Compatible Use Zone study, General Plan, or similar planning document identifies schools as not normally compatible or not normally recommended.

(C) any other site that the Department determines may not provide an adequate level of safety or non-disruptive noise for students based on aviation safety and aircraft noise considerations

Authority cited: Section 17215, Education Code.
Reference: Section 17215, Education Code.

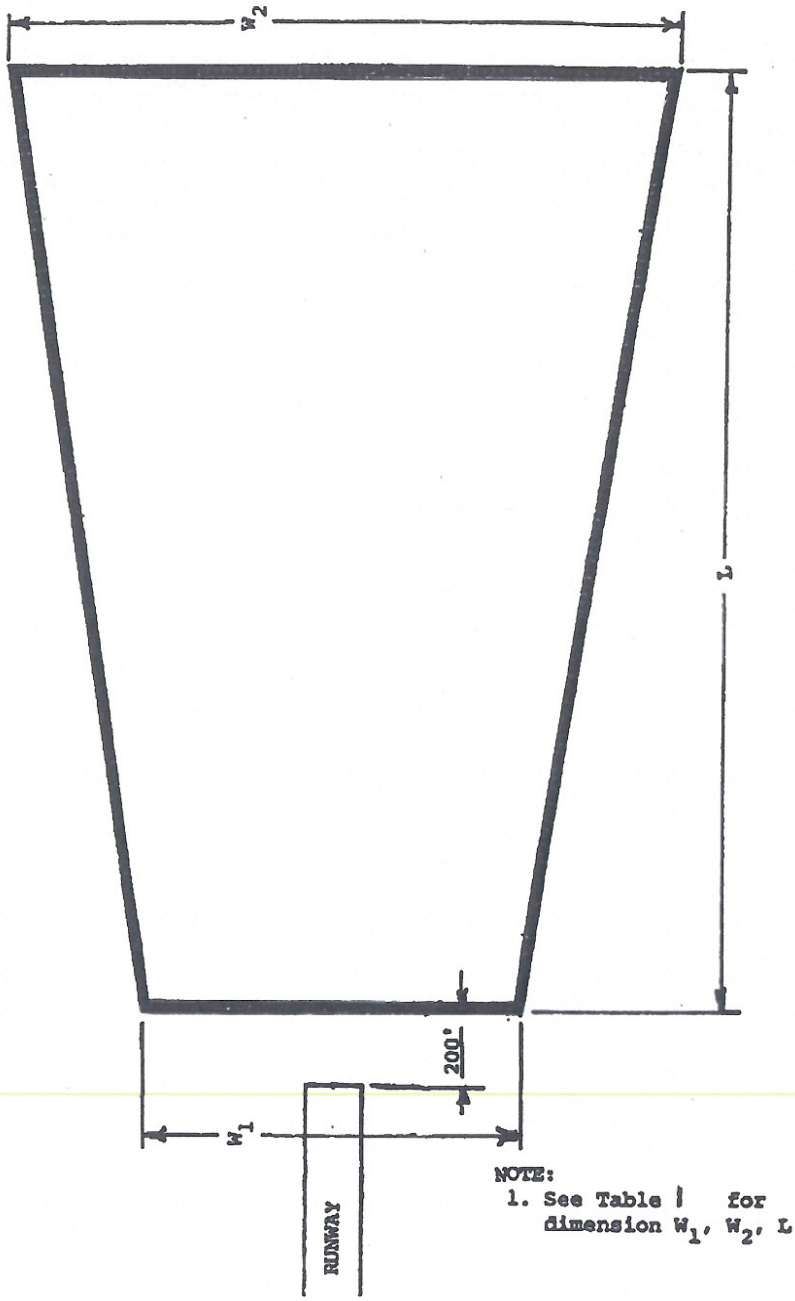

Figure 1 Runway protection zone

TABLE 1. RUNWAY PROTECTION ZONE (RPZ) DIMENSIONS
FOR CIVILIAN RUNWAYS

Approach Visibility Minimums[1]	Facilities Expected To Serve[2]	Dimensions		
		Length L Feet	Inner Width W_1 Feet	Outer Width W_2 Feet
Visual and Not Lower Than 1 Mile	Small Airplane[3] Exclusively	1,000	250	450
	Aircraft Approach Categories A & B	1,000	500	700
	Aircraft Approach Categories C & D	1,700	500	1,010
Not Lower Than 3/4 Mile	All Aircraft	1,700	1,000	1,510
Lower Than 3/4 Mile	All Aircraft	2,500	1,000	1,750

[1] The RPZ dimensions are for the runway end with the specified approach visibility minimums.

[2] "Aircraft approach category" means a grouping of aircraft based on 1.3 times their stall speed in their landing configuration at their maximum certificated landing weight. The categories are as follows:

Category A: speed less than 91 knots
Category B: speed 91 knots or more but less than 121 knots
Category C: speed 121 knots or more but less than 141 knots
Category D: speed 141 knots or more but less than 166 knots
Category E: speed 166 knots or more

[3] "Small airplane" means an airplane of 12,500 pounds or less maximum certificated takeoff weight.

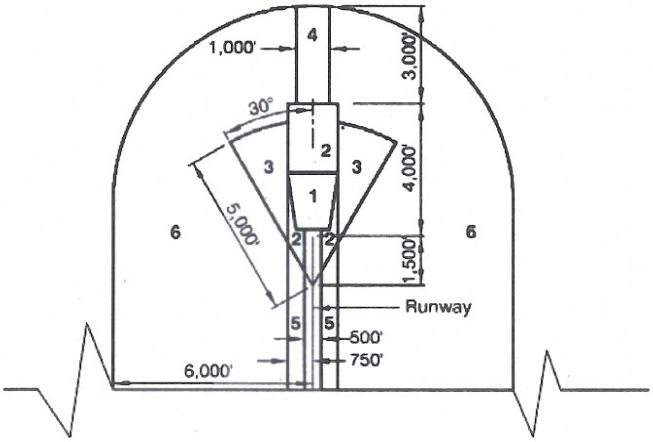

Civilian Runway that is < 6000' long

(not to scale)

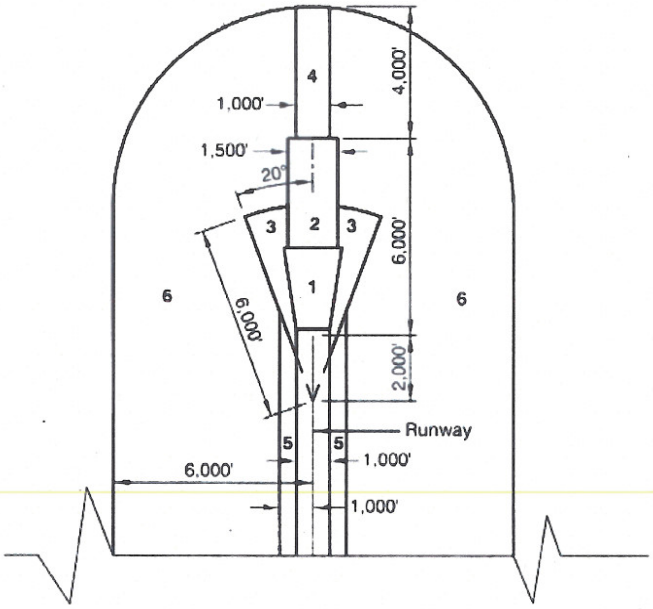

Civilian Runway that is ≥ 6000' long

(not to scale)

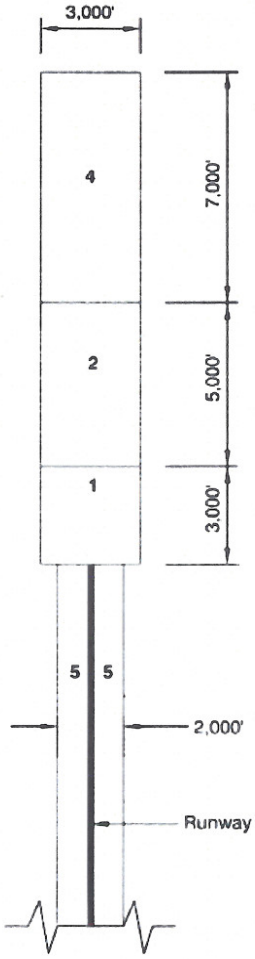

Military Runway

(not to scale)

Legend

1. Runway Protection Zone (RPZ)
2. Inner Approach/Departure Zone
3. Inner Turning Zone
4. Outer Approach/ Departure Zone
5. Sideline Zone
6. Traffic Pattern Zone

Notes:

See Table 1 for Civilian Runway RPZ dimensions

Figure 2