Morena Blvd Station Area Planning Study

Appendix A:

Community Outreach/Workshop Materials

A.0 Community Outreach Process

The project team's Community Outreach and Participation Framework focused on building stakeholder consensus and providing outreach to the general public to communicate information on the project and provide opportunities for public input. The ultimate goal for this project was to support the existing and proposed transit system and to increase mobility and within the region.

Outreach efforts included:

- Building awareness about the Morena Boulevard Station Area Planning Study (MBAP) and its importance to regional mobility and local access
- Conducting an open and transparent public process that provides timely public information, opportunities for interested members of the public to comment, and provide input to the decision-making process for the project
- Meeting regulatory public involvement requirements
- Seeking opportunities to involve a broad and diverse range of stakeholders

A.1 Public Outreach Strategy

One of the most challenging community outreach issues was the complexity of balancing the community's desire to retain the residential character now found in Clairemont and Linda Vista with the economic pressures for infill development, changing retail economic models, increased mobility choices and the dynamics of a significant seasonal student population.

For the project to have greater success with community outreach efforts we created partnerships with various community stakeholders. This helped the project to more effectively address and incorporate the broader community's ideas, concerns, and thoughts as they relate to mobility and land use improvements for the area. By establishing and maintaining a clear line of communications through well-orchestrated community partnerships, we were able to achieve participation that better reflected the demographics of the users and the community and better represent the interests of the general public that stands to be affected (either positive or negative) by the project.

The following are some of the strategies we implement to achieve the objectives of the MBAP:

- Established a clear project identity and conveyed consistent messages about the MBAP, its importance to increased mobility in the region, and its benefit to the community and region.
- Involved public stakeholders in the process on a regular basis to foster understanding and agreement on issues related to MBAP.
- Used a variety of communication methods to reach audiences including presentations, one-on-one/small group meetings, public workshops, e-blasts, written materials, online and media communications.
- Coordinated outreach efforts with Mid-Coast Corridor Transit Project (MCCTP) outreach representative to reduce confusion.
- Created a fact sheet that explained the goals and scope of each project MBAP/MCCTP.

- Provided the public with timely information about the MBAP, on a regular basis through presentations, website links, online communications, written materials and news updates.
- Documented public comments received during the community outreach process.
- Provided information to the public about the process and opportunities for review of public documents and opportunities for public comments.
- Utilized traditional and social media to convey project information to a broad audience.

Enhancing community participation and input required additional research of the non-traditional groups that had not yet been represented in the outreach process. This was important to ensure that the City of San Diego hears from all those who stand to be impacted by the project and to help guide the decision making process. In an effort to accomplish this we interviewed key community leaders and organizations within the study area that were willing to participate and motivate others to join in the process. This led to important community partnerships with Canyon Ridge Baptist Church, the San Diego County HHSA– Community Wellness Department and the San Diego Unified Schools Vietnamese Parents for a Quality Education. Through these partnerships we were able to enhance the Projects outreach efforts and increase community awareness within the Latino and Vietnamese communities.

We also assisted the City in notifying businesses and residents of the Morena Blvd. Station Area and invited them to participate in three community workshops that were tailored to gather the community's ideas, concerns, and thoughts. The workshops were designed to educate stakeholders about the topics of land-use, mobility, and community placemaking.

A.2 Public Workshops

Once the project area stakeholders had been identified and approached, the community at large was introduced to the MBAP process through a first of three public workshops. At each community workshop, we emphasized that community participation was going to be vital throughout the planning process and that the input provided should help to successfully balance community needs and give them a better project for their community.

To help channel their ideas and register their concerns, we provided simple and concise verbal and written guidelines on the areas needing their input and offered suggestions and examples on how to effectively contribute to the process. Each workshop was approximately three hours in length, and were scheduled and designed to solicit community-wide participation. We alternated the public workshops between weekday evenings and weekend days, to help provide working parents with a choice. The workshops also provided supervised child activities to allow those with children to actively participate. The goal of the workshops was to identify issues important to the community and establish an overall vision desired by the community. A contact database was set-up for quick and frequent communications regarding workshop notices, reminders and follow-up, project-related activities (such as questionnaires and walk audits), website links, newsletter release updates, and individual follow-up briefings. Each workshop averaged 5 to 7 email messages per contact. All three Workshops received excellent attendance by a wide representation of the study areas stakeholders and a fair representation of the general public from the area. Attendance averaged 65 to 75 people per workshop.

Public Workshop 1 – Introduction – Initial input on vision, goals and objectives as well as concerns and issues that will need to be addressed

Public Workshop 2 – Analysis – Land use trends, market opportunities and constraints, mobility conditions and options, existing zoning and land use flexibility and transit supportive planning policies

Public Workshop 3 – Concepts –Solutions for mobility issues, suggestions for land use changes and design guidelines to protect current uses and users in the area.

A.2.1 Workshop Format

The community workshops were designed as a mix of large-group presentations and open house /information booths set up with resources, materials, and representatives to answer questions. The workshops were set up to encourage comfortable, interactive learning and sharing experience for participants. The priority for the workshops was to learn about the community's values. All workshop handouts, presentation materials, and displays were provided in English and Spanish, as needed. The Workshop were designed so that all participants could visit the stations, interact with City staff and consultant team members, and have their comments, ideas, and suggestions recorded. The data gathered at the workshop was useful in learning about the community's desires, obtaining their comments and feedback on data and information gathered, and for clarifying and confirming the data. As part of the workshop agenda, an overview of the project, project purpose, involvement opportunities and some level of project education was provided as part of an informal presentation. At all three Workshops, Simultaneous Spanish-English translation was provided and Vietnamese translation was offered.

A.3 Walk Audit

Early on, the team conducted a walk audit with public official representatives and members of the community from the study area. Community members were provided with two methods to participate – one in-person walk audit or a self- guided walk audit with prepared materials. Stakeholders that have a great deal of knowledge in the area were encouraged to participate for the added support and expertise they were able to provide during the walk audit process. In consultation with City staff, careful reviews of possible routes was discussed in order to make sure that the routes were typical of the study area and to help highlight the specific issues or concerns that dominate the area. The objective of the audit was to become intimately familiar with the Morena Blvd. Station Area and to evaluate site constraints and potential solutions. During the walk audit, the consultant team representatives actively recorded the input provided by the stakeholders, but also accepted written comments made during the audit. The audit also provided an opportunity to encourage community members to attend and participate in the workshops. Upon completion of the in-person walk audit, a meeting was conducted to assess the issues and opportunities and constraints of key corridors in the area.

A.4 Multi-Modal Mobility Questionnaire

We assisted with the development of Multi-Modal Mobility Questionnaires with the direction of City staff in order to engage the wider community. These questionnaires were distributed at community events, project meetings, and posted online to collect ideas, concerns, and thoughts regarding mobility issues and the potential development around the stations. We also assisted with preparing and reviewing materials for distribution and coordinated with City staff on community areas and routes to target for survey mailers, door to door surveys, email surveys, and surveys available online. All surveys were produced in English and Spanish and provided bilingual team members for door to door surveys, as needed. As an example we conducted a survey of the restaurants participating in the "Taste of Morena," an event sponsored by the Morena Business Associations. We were able to interview and collect over forty questionnaires from each restaurant owner or management. We also participated in an all day booth opportunity at the Clairemont Family Day at the Bay where we were able to interview and collected over sixty questionnaires from event participant of the area all focusing on fitness and wellness in the neighborhood.

Additionally, we surveyed 68 businesses in the Morena District over a three day period and distributed 250 door hangers to other business in the area. Our focus areas for the survey included businesses along Clairemont & Morena, W Morena Blvd, Morena & Linda Vista Road and the Anna/Sherman industrial area. The survey included questions such as, "How long have you had your business in the Morena District? What do you view as the biggest amenity or strength of Morena District? What would you say is biggest current challenge to the success of our business? Some of the frequent benefit identified by most was for the Morena Districts close proximity to Mission Bay and to the USD campus; Many also expressed greatest dissatisfaction with traffic mobility and lack of parking in the Morena Area. Employers in the industrial area also expressed the need to make their work areas more walkable to/from transit and for recreational walking and buying power; Other provided suggestions for traffic calming measures, improved walking and biking choices and upgraded landscaping and signage.

A.5 Initial Public Involvement

Our early public involvement activities provided us with the opportunity to introduce the public to the MBAP and its development process; and gain initial feedback about how they would like to be involved, and provide input. Public involvement strategies during this period included preparing informational materials to help educate the public about the MBAP. These materials provided information about the project, the development process, and the information and/or referrals about how to get involved in the process. These informational materials included: project background information, project area map, fact sheet, Frequently Asked Questions, multimedia presentations, videos, and other relevant information. These materials were also provided to the City for placement on the City's website and were updated as needed throughout the process.

A.5.1 Conducted Stakeholder Briefings

We conducted briefings with a representative group of key stakeholders prior to the first workshop as an opportunity to introduce the MBAP, the development process and the upcoming opportunities for public involvement. These briefings helped the City assess

the levels of awareness about the project and identify issues to address through public involvement activities.

Topics that were covered during the briefings included:

- Preliminary project information
- Understanding of the process and how they can provide input
- Input on proposed means of public involvement
- Recommendations on other stakeholders to involve
-

In preparation for the first Workshop we approached and briefed the key stakeholders prior to the first Workshop. In addition, we attended the February/March monthly meetings of these organizations to announce and promote attendance at the Workshop.

A.5.2 Participate in Stakeholder Community Events

To reach a wider audience, project information was provided and community was input sought through participation at community events and booth opportunities. These events were sponsored by community groups of the area, with a special emphasis towards a specific audience such as minority groups. Information was shared about the project and its benefits to the community and feedback was collected from members of the public through comment cards, surveys and other means. These events also provided an opportunity for event attendees to opt into e-blast contact database. All community activities were recorded in the Community Outreach Calendar.

A.5.3 Ethnic Community Outreach

The residents in the Linda Vista study area are 64% ethnically diverse and 36% White. The Hispanic population is approximately 31%, the Asian & Pacific Islanders population is approximately 24%, and the Black population is approximately 5%. The residents of the Clairemont area are predominately white at 63% and 37% ethnically diverse. We were careful to administer culturally sensitive outreach methods and techniques to engage this important yet challenging community.

The limited outreach scope authorized for this project limited our ability to reach the limited English proficiency stakeholders. This is an important consideration to ensure social equity, environmental justice, non-discrimination and accessibility. We were however proactive in our efforts to ensure that audiences that may not traditionally participate in the transportation planning process were at least given the opportunity to participate. These audiences include, but are not limited to: minority groups, non-English speakers, and lower income households, individuals with disabilities, the elderly, and transit riders.

To reach audiences, organizations and media outlets representing these communities we approached key community leaders and organizations to provide project information, solicit participation and input, and provide a means for communicating back with members of these communities. Participation was encouraged via presentations to these organizations, participation in events sponsored by these organizations or targeted at these audiences, publishing articles in organizational newsletters, and publishing notices

and articles in ethnic media outlets. Additionally, we identified a number of local organizations that work with or represent underserved populations in the project area such as Canyon Ridge Baptist Church, San Diego Unified School District-Vietnamese Parents for a Quality Education - and the San Diego County HHSA – Community Wellness department to enhance outreach efforts and increase community awareness and input from those communities most difficult to reach.

A.6 Stakeholder Briefing Matrix

The following table lists stakeholders/interest groups that were contacted as a part of the outreach of the MBAP. The table details the different methods that were used to contact each group, based on the group's constituency, visibility, and/or sensitivity to engagement in projects like the MBAP. The methods listed were derived from those explained above and were executed by our team consisting of City staff, consultants, community leaders/representatives.

Table 2-1: Stakeholder Briefing Matrix

Morena Blvd Station Area Planning Study Stakeholder Briefing Matrix		
Stakeholder Organizations	**Outreach & Community Partnering**	**Person Attending**
Asian Business Association	Phone Interview/Request Flyer Dissemination	JLC
Asian Heritage Coalition	Phone Interview/Request Flyer Dissemination	JLC
Bayview Plaza Development Owners	Meet & Greet/Brief Project Description/Timeline	KTU+A/JLC
Chicano Federation	Phone Interview/Request Flyer Dissemination	JLC
City of San Diego Disabled Services Advisory Committee	Meet & Greet/Announce & Distribute Workshop Flyer	KTU+A/JLC
Clairemont Community Planning Group	Attend Meeting/Brief Project Description/Timeline	City/KTU+A JLC
Clairemont Town Council	Attend Meeting/Brief Project Description/Timeline	City/KTU+A JLC
Convivio Latino-Bayside	Meet & Greet/Announce & Distribute Workshop Flyer	JLC

Filipino-American BID	Phone Interview/Request Flyer Dissemination	JLC
Filipino-American Chamber of Commerce	Phone Interview/Request Flyer Dissemination	JLC
Greater Clairemont Chamber of Commerce	Meet & Greet/Announce & Distribute Workshop Flyer	KTU+A/JLC
Jerome's Furnishings – Jerry Navarra	Meet & Greet/Brief Project Description/Timeline	KTU+A/JLC
Kevin Faulconer, Councilman District 2	Attend Meeting/Brief Project Description/Timeline	City/KTU+A Team Member
Linda Vista Civic Association	Meet & Greet/Announce & Distribute Workshop Flyer	KTU+A/JLC
Stakeholder Organizations	**Outreach & Community Partnering**	**Person Attending**
Linda Vista Community Collaborative	Meet & Greet/Announce & Distribute Workshop Flyer	KTU+A/JLC
Linda Vista Community Development Corporation	Meet & Greet/Announce & Distribute Workshop Flyer	KTU+A/JLC
Linda Vista Community Planning Group	Attend Meeting/Brief Project Description/Timeline	City/KTU+A JLC
Linda Vista Town Council	Attend Meeting/Brief Project Description/Timeline	City/KTU+A JLC
Lorie Zapf, Councilwoman District 6	Attend Meeting/Brief Project Description/Timeline	City/KTU+A Team Member
MANA	Phone Interview/Request Flyer Dissemination	JLC
Mesa Community College – Associated Student Government	Meet & Greet/Announce & Distribute Workshop Flyer	KTU+A/JLC

Mexican American Business & Professional Association	Phone Interview/Request Flyer Dissemination	JLC
Mission Bay Park Committee	Attend Meeting/Brief Project Description/Timeline	City/KTU+A Team Member
Mixtec- Familia Indigena Unida	Meet & Greet/Announce & Distribute Workshop Flyer	JLC
Morena Business Association	Attend Meeting/Brief Project Description/Timeline	City/KTU+A Team Member
Neighborhood House Association	Phone Interview & Distribute Workshop Flyer	JLC
Old Town Community Planning Committee	Attend Meeting/Brief Project Description/Timeline	City/KTU+A JLC
Old Town Historical State Park Committee	Phone Interview/Request Flyer Dissemination	JLC
San Diego Mesa College Workforce/Students/Campus Organizations	Meet & Greet/Announce & Distribute Workshop Flyer	KTU+A/JLC
San Diego Workforce Partners	Phone Interview/Request Flyer Dissemination	JLC
Senior Housing/Assisted Living	Meet & Greet/Announce & Distribute Workshop Flyer	JLC
Tecolote Canyon Citizens Advisory Committee	Attend Meeting/Brief Project Description/Timeline	City/KTU+A Team Member
Urban Corps of San Diego County	Meet & Greet/Announce & Distribute Workshop Flyer	JLC
USD Sherman Harmer-School of Business, Real Estate Dept/USD Associated Students	Meet & Greet/Announce & Distribute Workshop Flyer	KTU+A/JLC
USD Workforce/Students/Campus Organizations	Meet & Greet/Announce & Distribute Workshop Flyer	KTU+A/JLC

Vietnamese Advisory Group	Meet & Greet/Announce & Distribute Workshop Flyer	JLC
Walk San Diego	Phone Interview/Request Flyer Dissemination	JLC
Other General Stakeholders	**Outreach & Community Partnering**	**Person Attending**
Bayside Community Center	Post Workshop Notice	JLC
Building Industry Association	Phone Interview/Request Flyer Dissemination	JLC
Clairemont Hills Kiwanis	Phone Interview/Request Flyer Dissemination	JLC
Mid-Coast Corridor Transit Project Working Group	Meet & Greet/Announce & Distribute Workshop Flyer	KTU+A
Move San Diego	Phone Interview/Request Flyer Dissemination	JLC
NAIOP	Phone Interview/Request Flyer Dissemination	JLC
Old Town San Diego Chamber of Commerce	Meet & Greet/Announce & Distribute Workshop Flyer	JLC
San Diego Bicycle Coalition	Meet & Greet/Announce & Distribute Workshop Flyer	KTU+A/JLC
San Diego County Taxpayers Association	Announce & Distribute Workshop Flyer	KTU+A/JLC
San Diego Highway Development Association	Phone Interview/Request Flyer Dissemination	JLC
San Diego Housing Federation	Phone Interview/Request Flyer Dissemination	JLC
San Diego-Imperial Counties Labor Council	Phone Interview/Request Flyer Dissemination	JLC
The Urban Land Institute	Phone Interview/Request Flyer	JLC

	Dissemination	
Media	**Outreach & Community Partnering**	**Person Attending**
Asian Journal	Request Posting of Workshop Notice in Community Section	JLC
Clairemont Community News	Request Posting of Workshop Notice in Community Section	JLC
Diario San Diego	Request Posting of Workshop Notice in Community Section	JLC
El Latino	Request Posting of Workshop Notice in Community Section	JLC
Filipino Press	Request Posting of Workshop Notice in Community Section	JLC
Hispanos Unidos	Request Posting of Workshop Notice in Community Section	JLC
La Prensa	Request Posting of Workshop Notice in Community Section	JLC
USD Newspaper – The Vista	Request Posting of Workshop Notice in Community Section	JLC
San Diego Mesa College Newspaper – The Mesa Press	Request Posting of Workshop Notice in Community Section	JLC

Morena Blvd Station Area Planning Study

Appendix B:

Existing Conditions Support Materials

B.0 Existing Conditions Support Materials

B.1 Ownership

Figure B-1 shows the presence of owner-occupied residential dwelling units in the study area. Although overall residential land uses only comprise a small portion of the study area, approximately half of the residential units are owner-occupied. It should be noted, however, that the mobile home parks are counted as being owner-occupied, even though the units a mobile.

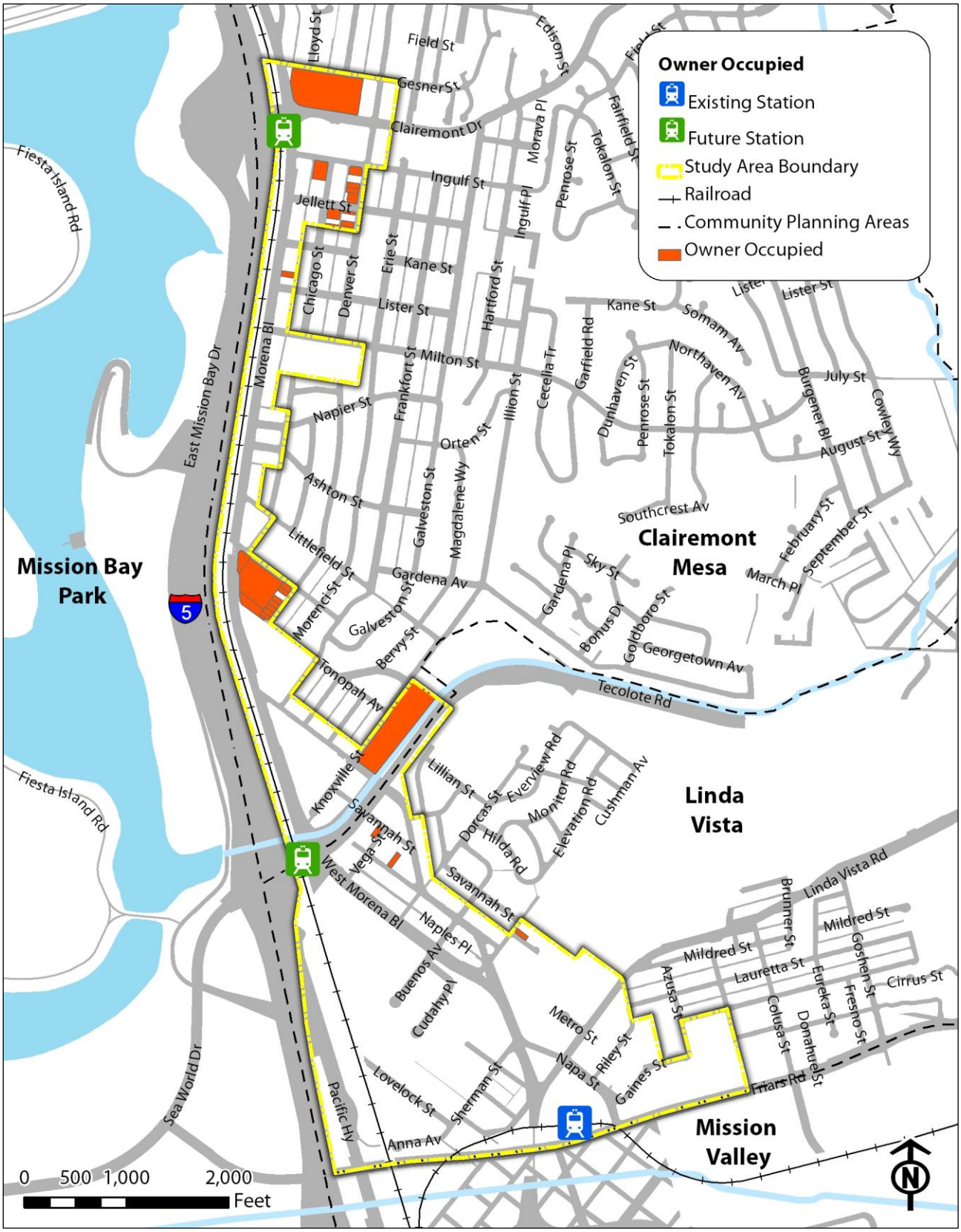

Figure B-1:Owner-Occupied Residential

B.2 Noise Setting

Introduction

The following analysis is based on noise measurements conducted within the study area. It includes a discussion of existing acoustical setting of the area, applicable City of San Diego noise standards for various land zones in the area, and practical noise abatement measures for planning and rezoning purposes.

Existing noise sources of potential significance in the study area include vehicular traffic on the local circulation network, passenger and freight rail traffic, and industrial zones, which may impact properties in their immediate vicinity. Primary noise generators in the local circulation network are Interstate 5 (I-5) and Morena Boulevard.

Definitions

Sound is created upon an alteration in pressure, normally of air. It travels in waves. Its pressure level, energy level, intensity level, etc. can be measured. Sound level refers to Sound Pressure Level (SPL).

Noise is defined as unwanted or excessive sound. It is broadly recognized as a form of environmental degradation. Technically, noise and sound are similar and are often used interchangeably.

Noise abatement refers to the technology of controlling sound impacts to meet acceptable guidelines and regulations, consistent with economic and operational considerations.

Average or **equivalent sound level (Leq)** is the average sound measured during a specific period (e.g., Leqh refers to Hourly Average Sound Level).

Units of sound are expressed as **Decibels (dB)** and the "A"-weighted sound filter is often used in environmental impact analysis because it closely approximates perception of loudness by humans (dB-A).

Community Noise Equivalent Level (CNEL) is the time-weighted annual sound level. Time-weighting technique applies a penalty to hourly sound levels during certain periods of evening and/or nighttime hours. CNEL applies a 5 dB-A penalty to the evening hours of 7 pm to 10 pm, and a 10 dB-A penalty to the nighttime hours of 10 pm to the following 7 am. These time periods and penalties were selected to reflect people's sensitivity to sound as a function of activity.

Day-Night Equivalent Level (Ldn) is similar to CNEL except it does not apply the evening hours' penalty. Ldn and CNEL are often used interchangeably.

Applicable Standards

The Noise Element of the City of San Diego General Plan implements many regulations, plans, and studies adopted by the state, the Airport Land Use Commission, the military, and the City's Noise Ordinance. These guidelines and regulations are presented in Table B-1 below.

Regulation	Description
Airport Noise Compatibility Planning (Code of Federal Regulations, Part 150)	Part 150 identifies compatible land uses with various levels of noise exposure to noise by individuals for local jurisdictions to use as guidelines, since the federal government does not have local land use control.
California Environmental Quality Act (CEQA)	CEQA considers exposure to excessive noise an environmental impact. Implementation of CEQA ensures that during the decision-making process stage of development, city officials and the public will be informed of any potentially excessive noise levels and available mitigation measures to reduce them to acceptable levels.
California Noise Insulation Standards (California Code of Regulations, Title 24)	Title 24 establishes an interior noise standard of 45-dBA for multiple unit and hotel/motel structures. Acoustical studies must be prepared for proposed multiple unit residential and hotel/motel structure within the Community Noise Equivalent (CNEL) noise contours of 60-dBA or greater. The studies must demonstrate that the design of the building will reduce interior noise to 45-dBA CNEL or lower.
California Airport Noise Standards (California Code of Regulations, Title 21)	Title 21 establishes that the 65-dBA CNEL is the acceptable level of aircraft noise for persons living near an airport.
Air Installations Compatible Use Zones (AICUZ) Study (US Department of Defense)	The AICUZ study establishes land use strategies and noise and safety criteria to prevent encroachment of incompatible land use from degrading the operational capability of military air installations
Airport Land Use Compatibility Plans (ALUCP)	The ALCUPs promote compatibility between airports and the land uses that surround them to the extent that these areas are not already devoted to incompatible land uses. The city is required to modify its land use plans and ordinances to be consistent with the ALUCPs or to take steps to overrule the Airport Land Use Commission (ALUC).
The City of San Diego Noise Abatement and Control Ordinance (Municipal Code Section 59.5.0101 et seq.)	Provides controls for excessive and annoying noise from sources such as refuse vehicles, parking lot sweepers, watercraft, animals, leaf blowers, alarms, loud music, and construction activities.

Table B-1: General Plan Noise Regulations

Exterior Noise Limits:
The City of San Diego has established a set of community noise standards which identify compatible outdoor and indoor sound level limits for various types of land uses (Table B-2). As presented in Table B-2, the maximum compatible exterior sound level for residential land uses is 65 dB-A CNEL.

Additionally, the City of San Diego, per State of California Administrative Code (Title 25), requires new attached residential/hotel structures to be located within an exterior noise environment of 60 dB-A CNEL or lower. If the exterior noise level exceeds the maximum compatible levels, measures should be examined to reduce such impacts to below a level of significance at the project site. Acoustical treatment measures for reduction of exterior noise levels are provided later in this section.

Interior Noise Limits:
If exterior noise levels cannot be reduced to acceptable levels by practical means, specific design and construction techniques must be incorporated to reduce the interior noise levels to below 45 dB-A CNEL. Acoustical treatment measures for reduction of interior noise levels are included later in this section

Existing Acoustical Setting

The following analysis is based on short-term and long-term (24-hour) sound surveys conducted within the study area (see Figure B-2 for monitoring locations). As a part of this study, seven short-term sound surveys were conducted at selected locations on February 12 and 13, 2013. Results of measurements are presented in Table B-3 below. Table B-3 also includes results of three surveys (i.e., Surveys 8-10) conducted within the study area as part of Mid-Coast Corridor Transit Project.

Existing ambient sound levels within the Morena Boulevard Station study area range from between 55 and 75 dB-A Ldn. Sound levels are highest at land uses abutting Morena Boulevard and lowest along the eastern boundary of the study area.

CITY OF SAN DIEGO LAND USE – NOISE CONPATIBILITY GUIDELINE				
Land Use Category	**Exterior Noise Exposure (dBA CNEL)**			
	60	**65**	**70**	**75**
Open Space and Parks and Recreational				
Community & Neighborhood Parks; Passive Recreation				
Regional Parks; Outdoor Spectator Sports, Golf Courses; Athletic Fields; Outdoor Spectator Sports, Water Recreational Facilities; Horse Stables; Park Maint. Facilities				
Agricultural				
Crop Raising & Farming; Aquaculture, Dairies; Horticulture Nurseries & Greenhouses; Animal Raising, Maintain & Keeping; Commercial Stables				
Residential				
Single Units; Mobile Homes; Senior Housing		45		
Multiple Units; Mixed-Use Commercial/Residential; Live Work; Group Living Accommodations **For uses affected by aircraft noise, refer to Policies NE-D.2. & NE-D.3.*		45	45	
Institutional				
Hospitals; Nursing Facilities; Intermediate Care Facilities; Kindergarten through G-12 Educational Facilities; Libraries; Museums; Places of Worship; Child Care Facilities		45		
Vocational or Professional Educational Facilities; Higher Education Institution Facilities (Community or Junior Colleges, Colleges, or Universities)		45	45	
Cemeteries				
Sales				
Building Supplies/Equipment; Food, Beverages & Groceries; Pets & Pet Supplies; Sundries, Pharmaceutical, & Convenience Sales; Wearing Apparel & Accessories			50	50
Commercial Services				
Building Services; Business Support; Eating & Drinking; Financial Institutions; Assembly & Entertainment; Radio & Television Studios; Golf Course Support			50	50
Visitor Accommodations		45	45	45
Offices				
Business & Professional; Government; Medical, Dental & Health Practitioner; Regional & Corporate Headquarters			50	50
Vehicle and Vehicular Equipment Sales and Services Use				
Commercial or Personal Vehicle Repair & Maintenance; Commercial or Personal Vehicle Sales & Rentals; Vehicle Equipment & Supplies Sales & Rentals; Vehicle Parking				
Wholesale, Distribution, Storage Use Category				
Equipment & Materials Storage Yards; Moving & Storage Facilities; Warehouse; Wholesale Distribution				
Industrial				
Heavy Manufacturing; Light Manufacturing; Marine Industry; Trucking & Transportation Terminals; Mining & Extractive Industries				
Research & Development				50

	Compatible	Indoor Uses	Standard construction methods should attenuate exterior noise to an acceptable indoor noise level. Refer to Section I.
		Outdoor Uses	Activities associated with the land use may be carried out.
	Conditionally Compatible	Indoor Uses	Building Structure must attenuate exterior noise to the indoor noise level indicated by the number for occupied areas. Refer to Section I.
		Outdoor Uses	Feasible noise mitigation techniques should be analyzed and incorporated to make the outdoor activities acceptable. Refer to Section I.
	Incompatible	Indoor Uses	New construction should not be undertaken.
		Outdoor Uses	Severe noise interference makes outdoor activities unacceptable.

Table B-2: Noise Compatibility Guidelines

Figure B-2: Sound Monitoring Locations

RESULTS OF AMBIENT SOUND MEASUREMENTS					
	Site	Location	Start Date	Start Time	Leq (dBA)
1	L-1	Station #2, north of Armstrong Nursery	2/12/13	7:06	65
2	L-2	Tecolote Rd, East at The Tennis Club	2/12/13	8:15	59
3	L-3	Buenos Avenue – west end	2/12/13	16:33	63
4	L-4	West of Buenos Avenue, at 60' from tracks	2/12/13	17:37	69
5	L-5	Metro Ct.	2/13/13	7:32	63
6	L-6	Corner of Napa St. & Friars Rd. at The Village	2/13/13	16:30	68
7	L-7	Coastal Trailer Villa, at 20' of Morena Blvd	2/13/13	17:46	72
8	ST-2	Fashion Career College	3/9/11	13:00	73
9	LT-3	Fashion Career College Student Housing	3/9/11	15:00	72
10	LT-4	2446 Denver Street	3/7/11	14:30	57

Notes:

- Refer to Figure B-2 for survey locations.
- All surveys were short-term except for 9 and 10 which were 24-hour surveys.

Table B-3: Ambient Air Sound Measurements

Typical Sound Attenuation Methods

Noise impacts can typically be abated by four basic methods:

1. Reducing the sound level of the noise generator.
2. Interrupting the noise path between the source and receiver.
3. Increasing the distance between the source and receiver.
4. Insulating the receiver (building material and construction methods).

All of these methods help to reduce interior noise levels, but only the first three help to reduce outside noise levels with the exception of aircraft noise.

Reducing the Source Noise:
Although the City has little direct control over noise produced by vehicles, the most efficient and effective means of abating noise from transportation systems is to reduce the noise at the source. Noise generated by aircraft, motor vehicles, and trains, for example, may be abated through improved engine design. Structure, vehicle, engine design or the use of mufflers may successfully quiet certain noise sources.

Traffic calming and traffic management techniques and the use of low-noise road pavement surfaces can help to reduce traffic noise from motor vehicles.

Noise generated by land uses, such as industrial uses, may be abated through site design, structure design and construction, quieter machinery, and the limiting of noise-producing operations. This method most directly assigns the responsibility to the generator of the noise.

Interrupting the Noise Path:
Strategically placing walls and/or landscaped berms, utilizing natural land and/or built forms or a combination of two or more of these methods between the noise source and the receptor may minimize noise. Generally, effective noise shielding requires a continuous, solid barrier with a mass which is large enough to block the line of sight between source and receiver. Variations may be appropriate in individual cases based on distance, nature, and orientation of buildings behind the barrier, and a number of other factors. Garages or other structures can help to shield residential units and outdoor living areas from non-aircraft noise. The shape and orientation of buildings can also help to avoid reflecting the noise from a building surface to adjacent noise sensitive buildings. Sound walls are the least preferable method due to the aesthetic concerns.

Separating the Noise Source:
Spatial separation or isolation of the noise source from the potential receiver may minimize the effects of noise. Site planning techniques that incorporate spatial buffers along freeways, for example, may reduce the noise level affecting adjacent noise-sensitive land uses. Developing noise-compatible commercial or industrial uses in these buffer areas may also help to interrupt the noise path.

Insulating the Noise Receiver:
Acoustical structures, enclosures, or construction techniques can help to abate the noise problem by insulating the receiver. The proper design and construction of buildings can help to reduce interior noise levels. Nearby noise sources should be recognized in

determining the location of doors, windows, and vent openings. Sound-rated windows (extra thick or multi-paned), doors, wall construction materials, and insulation are also effective as specified in CCR Title 24 in reducing interior noise levels. The difference in sound (noise) levels from the exterior to the interior of a structure indicates the sound transmitted loss through the window, door, or wall.

A Sound Transmission Class (STC) rating specifies the noise level reduction that windows, doors, wall construction materials, and insulation provide. For example, if the exterior of a structure is exposed to 75 dBA and 45 dBA is measured on the interior of the structure, then a reduction of 30 dBA is achieved. Typically, higher STC ratings indicate greater interior noise reductions.

The use of proper construction methods should make certain that doors and windows are fitted properly, openings sealed, joints caulked, and plumbing constructed to ensure adequate insulation from structural members. Sound-rated doors and windows will have little effect if left open. This may require installation of air conditioning for adequate ventilation. Table 3-2 indicates the acceptable interior noise level for land use types.

B.3 Air Quality Setting

Overview

Definitions/Air Quality Background

PM_{10} (particulate matter less than 10 microns) is a major air pollutant consisting of tiny solid or liquid particles of soot, dust, smoke, fumes, and aerosols. The size of the particles (10 microns or smaller, about 0.0004 inches or less) allows them to easily enter the lungs where they may be deposited, resulting in adverse health effects. PM_{10} also causes visibility reduction and is a criteria air pollutant.

$PM_{2.5}$ (particulate matter less than 2.5 microns) is a similar air pollutant to PM_{10}, consisting of tiny solid or liquid particles which are 2.5 microns or smaller (often referred to as fine particles). These particles are formed in the atmosphere from primary gaseous emissions that include sulfates formed from sulfur dioxide (SO_2) release from power plants and industrial facilities and nitrates formed from nitric oxide/nitrogen dioxide (NO_X) release from power plants, automobiles, and other types of combustion sources. The chemical composition of fine particles highly depends on location, time of year, and weather conditions. $PM_{2.5}$ is a criteria air pollutant.

A consistent correlation between elevated ambient fine particulate matter (PM_{10} and $PM_{2.5}$) levels and an increase in mortality rates, respiratory infections, number and severity of asthma attacks, and number of hospital admissions has been observed in different parts of the United States and various areas around the world. In recent years, some studies have reported an association between long-term exposure to air pollution dominated by fine particles and increased mortality, reduction in life span, and increased mortality from lung cancer.

Daily fluctuations in $PM_{2.5}$ concentration levels have also been related to hospital admissions for acute respiratory conditions in children, to school and kindergarten absences, to a decrease in respiratory lung volumes in normal children, and to increased medication use in children and adults with asthma. Recent studies show

lung function growth in children is reduced with long-term exposure to particulate matter.

The elderly, people with pre-existing respiratory or cardiovascular disease, and children appear to be more susceptible to the effects of high levels of PM_{10} and $PM_{2.5}$.

Ozone (O_3), or smog, is a highly reactive and unstable gas formed when volatile organic compounds (VOCs) and nitrogen oxides (NO_X), both byproducts of internal combustion engine exhaust, undergo slow photochemical reactions in the presence of sunlight. Ozone concentrations are generally highest during the summer months when direct sunlight, light wind, and warm temperature conditions are favorable to the formation of this pollutant.

San Diego Air Quality Setting

The climate in the San Diego Air Basin (SDAB) is controlled by the strength and position of the subtropical high-pressure cell over the Pacific Ocean. Areas within 30 miles of the coast experience moderate temperatures and comfortable humidity. Precipitation is limited to a few storms during the winter season and the overall climate is characterized by hot, dry summers and mild winters.

Because of the atmospheric conditions present in and around the study area, general air quality is considered acceptable. Primary air emission sources of concern within the study area include the I-5 freeway and congested intersections. Freeway emissions are largely dissipated by atmospheric elements and congested intersections (as defined as Level of Service (LOS) E or F) only occur once within the study area based on existing peak hour approach volumes (See Section 5, Mobility for full traffic analysis). A mitigating factor in the LOS E intersection is the relatively low throughput of vehicles, indicating the issue is likely a street design/signal timing issue rather than a surplus of polluting vehicles. A tertiary air emission concern is stationary sources, although none have been identified in or near the study area.

In all, the following resources were reviewed for guidelines related to air quality and identification of potential emission sources:

1. City of San Diego General Plan: City of Villages, 2008.
2. General Plan Program EIR, SCH 2006091032, September 28, 2007.
3. Clairemont Mesa Community Plan, Adopted April 1989, last updated April 2011.
4. Linda Vista Community Plan and Local Coastal Program Land Use Program,: “A Community of Neighbors…”, Adopted September 1998, last updated April 2011.
5. Air Quality and Land Use Handbook: A Community Health Perspective: April 2005, California Air Resources Board.
6. California Environmental Quality Act: Significance Determination Thresholds, City of San Diego Development Services Department, 2011.
7. City of San Diego Land Development Manual.
8. 2011 Air Toxics "Hot Spots", Program Report for San Diego County, December 5, 2012, San Diego County Air Pollution Control District.

9. San Diego International Airport Land Use Compatibility Plan, Steering Committee Report 5, Safety Compatibility Factor, September, 2011.

The SDAB is currently considered to be a basic non-attainment area for the National Ambient Air Quality Standards (NAAQS) and California Ambient Air Quality Standards (CAAQS) for O_3, with three exceedances of the 8-hour federal standard and one exceedance of the 1-hour state standard in 2007; three exceedances of the 8-hour federal standard and two exceedances of the 1-hour state standard in 2008; and one exceedance of both the 8-hour federal standard and 1-hour state standard in 2009. The SDAB is also classified as a nonattainment area for the CAAQS for $PM_{2.5}$, and PM_{10}; no exceedances of the state or federal standards were recorded between 2007 and 2009. The SDAB is classified as an attainment or unclassified area for all other pollutants. Table B-4 displays the air quality standards and measurements for the SDAB for years 2008-2011.

Pollutant	Standard	Year		
		2008	2009	2010
Ozone (O_3)				
Maximum 1-Hour Concentration (ppm)	–	0.11	0.10	0.10
Maximum 8-Hour Concentration (ppm)	–	0.09	0.08	0.08
Number of Days Exceeding State 1-Hour Standard	>0.09 ppm	3	2	1
Number of Days Exceeding State 8-Hour Standard	>0.07 ppm	10	4	6
Number of Days Exceeding Federal 8-Hour Standard	>0.075 ppm	5	2	3
Number of Days Exceeding Health Advisory	≥0.15 ppm	0	0	0
Carbon Monoxide (CO)				
Maximum 1-Hour Concentration (ppm)	–	5.6	4.4	3.9
Maximum 8-Hour Concentration (ppm)	–	2.8	3.4	2.5
Number of Days Exceeding Federal / State 8-Hour Standard	>9.0 ppm	0	0	0
Number of Days Exceeding State 1-Hour Standard	>20 ppm	0	0	0
Number of Days Exceeding State 1-Hour Standard	>35 ppm	0	0	0
Nitrogen Dioxide (NO_2)				
Maximum 1-Hour Concentration (ppm)	–	0.063	0.054	0.058
Annual Arithmetic Mean Concentration (ppm)	–	0.016	0.014	0.013
Number of Days Exceeding State 1-Hour Standard	>0.18 ppm	0	0	0
Respirable Particulate Matter (PM_{10})				
Maximum 24-Hour Concentration ($\mu g/m^3$)	–	158	126	108
Annual Arithmetic Mean ($\mu g/m^3$)	–	26.8	25.1	21.1
Fine Particulate Matter ($PM_{2.5}$)				
Maximum 24-Hour Concentration ($\mu g/m^3$)	–	30	56	27
Annual Arithmetic Mean ($\mu g/m^3$)	–	13.3	12.1	10.8

Table B-4: Air Pollution Standards and Measurements 2008-2010

Sensitive Receptors

"The San Diego Air Pollution Control District (APCD) identifies sensitive receptors as populations that are more susceptible to the effects of air pollution than the general population. Sensitive receptors located in or near the vicinity of known air emission sources, including freeways and congested intersections, are of particular concern. Sensitive receptors are located throughout the study area and include, but are not limited to, the following: hospitals, libraries, child care centers, adult assisted care facilities, and schools. Land use compatibility issues relative to siting of pollution-emitting uses or siting of sensitive receptors must be considered." (General Plan EIR)

Some of the sensitive receptors are mapped, however, because many change location, a determination of proximity may be necessary for projects that are anticipated to generate significant $PM_{2.5}$ or PM_{10} (Adult Day Care, State Licensed Child Care, State Licensed Group Homes). The determination of sensitive receptors is a part of any health risk assessment or air quality report conducted for new development of any significant size.

Relevant General and Community Plan Air Quality Policies

Air quality is regulated through a variety of permits and oversight by local and state agencies. The City has development standards that mandate best management practices (BMP) for construction. The BMPs are updated as state and federal regulations change. Often BMPs applied to address one environmental issue, e.g. protection to reduce erosion and runoff during construction to preserve water quality and address air quality by reducing the potential for wind erosion.

The following policies are referenced in the General Plan EIR as directly reducing the air quality impact of the General Plan.

General Plan

CE-F.1 Develop and adopt a fuel efficiency policy to reduce fossil fuel use by City departments, and support community outreach efforts to achieve similar goals in the community.

CE-F.2 Continue to upgrade energy conservation in City buildings and support community outreach efforts to achieve similar goals in the community.

CE-F.3 Continue to use methane as an energy source from inactive and closed landfills.

CE-F.4 Preserve and plant trees, and vegetation that are consistent with habitat and water conservation policies and that absorb carbon dioxide and pollutants.

CE-F.5 Promote technological innovations to help reduce automobile, truck and other motorized equipment emissions.

CE-F.6 Encourage and provide incentives for the use of alternatives to single-occupancy vehicle use, including using public transit, carpooling, vanpooling, teleworking, bicycling and walking. Continue to implement programs to provide City employees with incentives for the use of alternatives to single-occupancy vehicles.

CE-F.7 Influence the development of state, federal, and local actions to increase the use of alternative fuels.

CE-F.8 Influence the development of state, federal and local efforts to increase fuel efficiency and reduce greenhouse gas emissions.

CE-F.9 Prohibit the idling of motive equipment (vehicles and equipment using fossil fuels) that is owned or leased by the City and operated by City employees unless mission necessary.

Clairemont Mesa Community Plan
None

Linda Vista Community Plan
None

Design Considerations from Other Sources
In 2005, the California Air Resources Board provided guidance on the placement of new uses near sources of diesel particulates. The recommendations in the *Air Quality and Land Use Handbook,* are based on health risk assessment calculations for sensitive receptors near PM generating uses. The following are design recommendations from the *Handbook.*

California Air Resources Board:

- Avoid siting new sensitive land uses within 500 feet of a freeway, urban roads with 100,000 vehicles/day, or rural roads with 50,000 vehicles/day.
- New or expanded highway projects that have a significant number of or significant increase in diesel vehicles;
- Projects affecting intersections that are at LOS D, E, or F with a significant number of diesel vehicles, or those that would change to LOS D, E, or F, because of increased traffic volumes from a significant number of diesel vehicles related to the project;
- New or expanded bus and rail terminals and transfer points that have a significant number of diesel vehicles congregating at a single location; or
- Projects in or affecting locations, areas, or categories of sites that are identified in the PM2.5 applicable implementation plan or implementation plan submission, as appropriate, as sites of violation or possible violation.
- Avoid siting new sensitive land uses within 300 feet of a large gas station (defined as a facility with a throughput of 3.6 million gallons per year or greater). A 50 foot separation is recommended for typical gas dispensing facilities.

Summary
The study area, and the San Diego region in general, is fortunate in that is has a geographical setting and atmospheric conditions that foster good air quality. Further, the study area currently lacks either stationary or vehicular sources of concern which would impact sensitive receptors, allowing for great flexibility in the siting of all land uses/types of facilities. In the future, it is unlikely that new stationary sources of emissions would be allowed to develop in the study area, and ideally, roadway traffic volume increases would be minimized through the development of alternative modes of transportation (such as the proposed extension of LRT service). Even if future traffic causes additional intersections to reach a failing LOS, the standard approach of increasing distance between the intersection and sensitive receptor sites will have to be weighed against the benefits of mixed land uses and accessibility through close proximity to transit services (including intersection bus stops).

B.3.1 Hazardous Material Setting

Introduction and Methodology

Environmental reconnaissance was conducted for the study area in order to identify environmental conditions that might impact land use decisions as well as conditions that might be encountered during construction. The basis of information for this report was produced by Environmental Data Resources (EDR). This basis includes a database radius map report, a city directory search, historical topographical maps, a Sanborn map search, and historical aerial photos. The full hazardous material report is provided as an appendix to this report.

Summary of Results

Database Radius Map Report

Overall, the radius map report generated over 2,200 environmental records within a 3-mile radius. However, a majority of these results are not relevant because they are located in areas that pose no impact on the study area. Sites identified south of the San Diego River, in Mission Bay to the west, and Mission Beach to the northwest were removed from consideration for this report. The general groundwater flow direction is anticipated to be from east to west, so properties to the east of the study area up to one mile were included for initial review.

After applying the above limitations, the database contained 352 records within the study area to be reviewed, and only 34 of these were deemed to be records of concern. These 34 records pertained to 20 different properties within the study area. In addition, another 91 records were found for properties in the vicinity of the study area. Depending on available information about groundwater flow directions as well as the potential for fate and transport of contaminants, these nearby sites may be a concern. See the hazardous materials appendix for full information on sites and site information.

Figure B-3 displays the location of the sites of concern, those of potential concern, and those analyzed, but determined to not be of concern. The sites of concern are fairly evenly distributed throughout the study area. Of the three LRT station sites, the highest number of sites of concern occur near the existing Morena/Linda Vista station, followed by the proposed Clairemont Station, and lastly, the proposed Tecolote/Sea World Drive station. The proposed Tecolote/Sea World Drive station has almost no sites of concern in its immediate vicinity.

Topographical Maps

For the study area, one of the most significant changes observed on these maps is the development of the Cudahy Slough. This feature is identified in the 1953 map at the southeast corner of the study area, but it is shown as developed in 1967. These maps also show a significant progression of development of Mission Bay, just west of the study area.

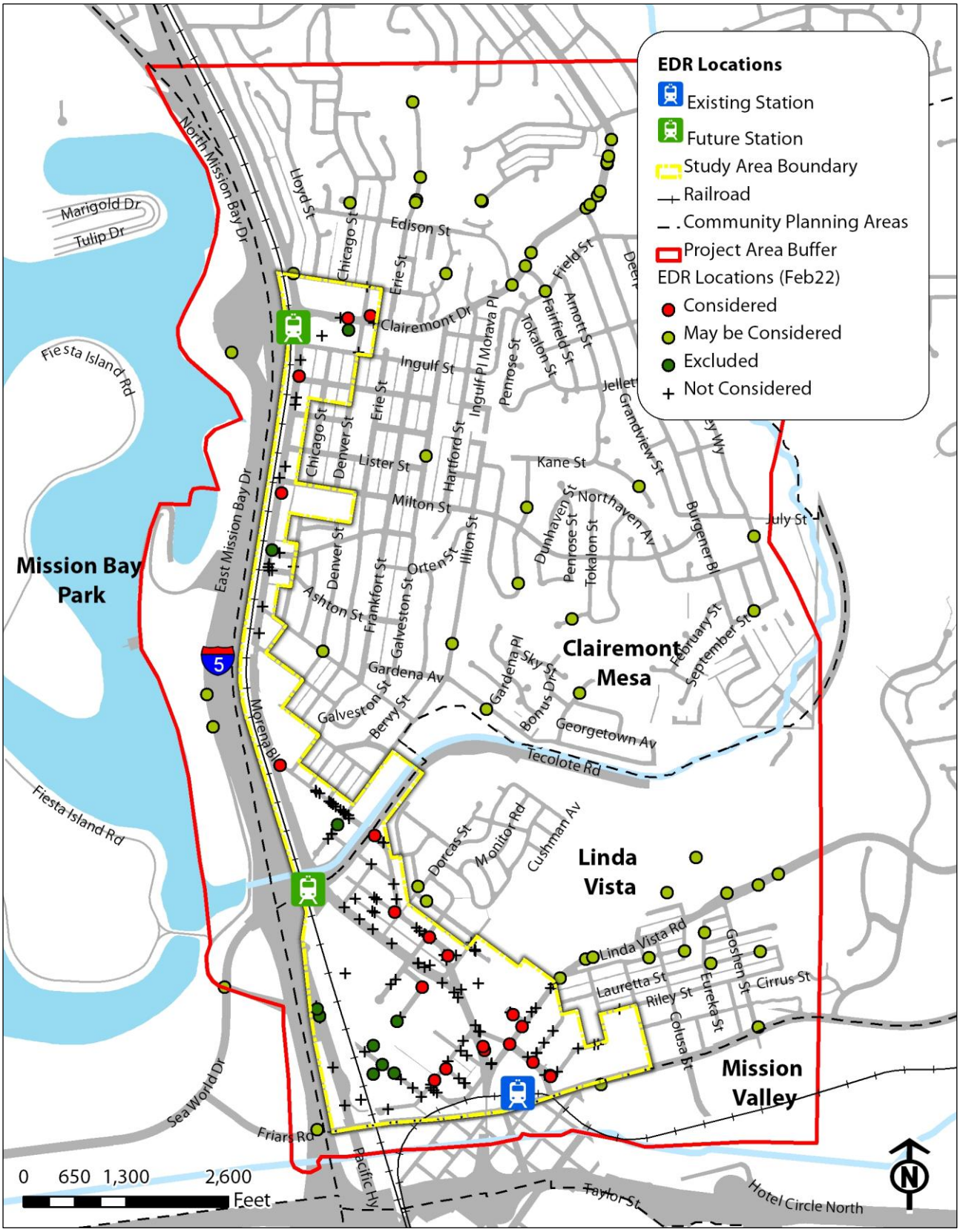

Figure B-3: Environmental Sites of Concern

B.4 Planning Analysis

The regulatory environment of the study area includes the City of San Diego's currently adopted plans, including the General Plan, community plans, and zoning ordinance/municipal code. These documents not only affect current growth and development, but future development as well.

B.4.1 Adopted Plans

The following discussion provides information from the City's General Plan, Clairemont Mesa Community Plan, Linda Vista Community Plan, and the City's Zoning Ordinance.

B.4.2 San Diego General Plan

The General Plan is the document which provides a vision for the next 20-30 years of growth within the City. It develops goals for both the entire City and communities within the City through establishing goals, objectives, and policies. Below is information on the items which influence development of TOD and other planning scenarios similar to those present in the study area.

General Plan Guiding Strategy: "City of Villages"

The General Plan has adopted a "City of Villages" guiding strategy with the goal of locating mixed-use villages throughout the City and connecting them by high quality transit. These villages will be pedestrian-friendly activity centers at the heart of each community. Villages are characterized by accessible and attractive streets and public spaces. The design of each village will be unique to the community in which it is located. Three of the village prototypes are applicable to the study area and are discussed below. Table B-5 describes and provides information on the land uses utilized in the General Plan and Community Plans.

Neighborhood Village Center

The Clairemont station area, and areas along Tecolote Rd and West Morena, north of the Tecolote Station are identified as a Neighborhood Village Center village type:

> "…neighborhood-oriented areas with local commercial, office, and multifamily residential uses, including some structures with office or residential space above commercial space. Village Centers will contain public gathering spaces and/or civic uses. Uses will be integrated to the maximum extent possible in order to encourage a pedestrian-oriented design and encourage transit ridership. Neighborhood Village Centers range in size from just a few acres to more than 100 acres."

Transit Corridor

The Morena Blvd corridor between the Clairemont and Tecolote stations is identified as a Transit Corridor village type:

> "The City contains commercial corridors that are lively and vital; pedestrian-friendly; home to a rich variety of small businesses, restaurants, and homes; and served by higher frequency transit service. Transit corridors provide valuable new housing opportunities with fewer impacts to the regional freeway system because of their available transit service. Some corridors would benefit from revitalization."

Urban Village Center

A large area surrounding Morena station and to the north, is identified as an Urban Village Center village type:

> "Urban Village Centers are higher-density/intensity areas located in sub-regional employment districts. They are characterized by a cluster of more intensive employment, residential, regional and sub-regional commercial uses that maximize walkability and support transit."

General Plan Land Use	Community Plan Land Use	Description	General Plan Intensity/Density Range
Residential	Residential - Low	Provides for single-family housing within the lowest-density range.	5 - 9 du/acre
	Residential - Medium	Provides for both single and multifamily housing within a medium-density range.	15 - 29 du/ac
Commercial, Employment, Retail and Services	Neighborhood Commercial	Provides local convenience shopping, civic uses, and services serving an approximate three mile radius.	0 - 44 du/ac (if residential permitted)
	Community Commercial	Provides for shopping areas with retail, service, civic, and office uses for the community at large within three to six miles. It can also be applied to Transit Corridors where multifamily residential uses could be added to enhance the viability of existing commercial uses.	0 - 74 du/ac (if residential permitted)
Industrial Employment	Light Industrial	Allows a wider variety of industrial uses by permitting a full range of light manufacturing and research and development uses and adding other industrial uses such as warehousing, storage, wholesale distribution and transportation terminals. Multi-tenant industrial uses and corporate headquarters office uses are permitted.	N/A

Table B-5: General Plan and Community Plan Land Uses

Summary of Supporting General Plan Policies

General Plan policies support the revitalization of transit corridors to allow higher intensity mixed-use development. Transit corridors support a mix of employment, commercial and higher density residential uses, and will provide public gathering spaces. Policies support building design and streetscape improvements that enhance or maintain a "Main Street" character along transit corridors. Policies support the General Plan "City of Villages" concept and allow for flexibility of each village to serve the functions and preferences of the community it serves. The mix of uses at each village will be determined at the community plan level based on the needs of that community and the role the village plays in the region and city. See summaries of relevant community plans below.

B.4.3 Community Plans

Clairemont Mesa Community Plan (Adopted 1989)

Project Area Existing Conditions Overview

- Commercial strip development
- Uses in this area include offices, mini-markets, restaurants, car sales and residential development
- Poor connectivity
- In need of beautification: more landscaping, new signage

Project Area Vision

- Retail and commercial corridor with professional offices
- Enhanced pedestrian linkages and streetscape environment: wider sidewalks, new landscaping, attractive signage, minimize curb cuts
- Create unifying theme
- Improve mobility and linkages for all transportation modes throughout the project area
- Amenities at the LRT station, such as shelters, benches, bike racks, route maps, schedules and landscaping
- Intensification of vacant site adjacent to the LRT station (West Clairemont Plaza)
- Direct access from Morena Blvd to I-5
- Undergrounded utilities along major transportation corridors

Relevant Objectives for Commercial Development

- Require commercial areas to incorporate landscaping which will help to integrate the commercial development into the surrounding neighborhood.
- Design commercial areas to best utilize the existing transportation system and provide pedestrian linkages to and within commercial development as well as connections to adjacent uses.
- Maintain commercial uses in neighborhood commercial centers.
- Revitalize the commercial area along the southern portion of Morena Boulevard and improve both vehicular and pedestrian access along the Boulevard.

- Design signs as an integral part of a development project which are informative, compatible with the scale of surrounding development and architecturally compatible with the project and surrounding area.

Recommendations for the West Clairemont Plaza Site
(Vacant site adjacent the proposed LRT station at the southeast intersection of Clairemont Dr. and Morena Blvd.)

1. **Use**
   - Retail and commercial services should be encouraged on the site. Professional offices are also permitted. Residential uses may be permitted on the eastern and southern portions of the lot and above the ground floor throughout the site.

2. **Architecture and Site Design**
   - Ensure compatibility with adjacent residential development
   - Support use of the Mid-Coast transit line,
   - Enhances the community image
   - Development should occur with a unifying architectural, signage and landscaping theme and comprehensive pedestrian and bicycle pathways.
   - Development should capitalize on the site's topography
   - Pedestrian amenities such as landscaping and wide sidewalks (eight to ten feet wide) should be provided along the Clairemont Drive edge. This street segment should link the Clairemont Community to Mission Bay Park through improved pedestrian access and a landscaping theme that visually relates to Mission Bay Park.
   - Development along the Morena Boulevard frontage should be pedestrian-friendly, with building entrances and windows oriented to the street. A direct pedestrian connection should be made to the future trolley station. Landscaping should link the shopping center with the transit station.
   - The Ingulf Street side shall be developed with sensitivity to the residential areas to the south, minimizing noise impacts and street parking conflicts. Any vehicular entrance on this side should be located between Morena Boulevard and Chicago Street.
3. **Transportation Improvements**
   - Provide clear access points to the shopping center. The primary vehicular access should be from Clairemont Drive. Consolidate curb cuts.
   - Pedestrian pathways should occur throughout the site. The pathways should be landscaped and protected from vehicular interference.
   - Redevelop the commercial areas on Morena Boulevard with off-street parking regulations

Recommendations for Streets

Morena Boulevard

- Morena Boulevard should be restriped to three lanes (two through lanes and a center, two-way turn lane) between West Morena Boulevard (north intersection) and Tecolote Road.
- Direct freeway access from Morena Boulevard to I-5 should be provided. A direct ramp from Morena Boulevard to Clairemont Drive should be developed to provide direct access to I-5. This would reduce the through traffic on adjacent residential streets attempting to access the freeway.
- Morena Boulevard should have wider sidewalks to enhance pedestrian circulation.
- Signalize the intersection of Morena Boulevard and West Morena Boulevard (northern intersection)

Knoxville Street

- Knoxville Street should be a through street connecting Morena Boulevard to West Morena Boulevard. This connection will improve circulation by providing a connection between the community and a major street while bypassing the Morena Boulevard-Tecolote Road intersection. The Knoxville connection will also require the widening of Morena Boulevard from Knoxville Street to Tecolote Road, including the bridge over Tecolote Creek, to provide two northbound turn lanes, one southbound left-turn lane, one southbound through/right-turn lane, and an exclusive southbound right-turn lane.

Recommendations for LRT Stations

The proposed transit station at the intersection of Clairemont Drive and Morena Boulevard should be two to three acres to accommodate parking. An intensification of multifamily development and commercial and industrial uses, adjacent to the transit station, just south of Tecolote Road on Morena Boulevard, is recommended (see Land Use Elements):

- Shelters with benches should be provided for passenger waiting areas.
- LRT stops should include graphics identifying LRT routes and schedules.
- Bicycle racks and lockers should be provided at each LRT stop.
- Landscaping should be consistent with citywide landscaping guidelines.

Recommendations for Utilities

All utility wires and transmission lines in Clairemont Mesa should be placed underground where technically and economically feasible. Priority areas for the undergrounding of overhead utility wires should include the community's major transportation corridors in order to visually improve the community character. These areas include:

- West Morena Boulevard from Tecolote Road to Morena Boulevard
- Morena Boulevard from West Morena Boulevard to Balboa Avenue
- Clairemont Drive from Morena Boulevard to Balboa Avenue

Linda Vista Community Plan (Adopted 1998)

Existing Conditions Overview

- Morena serves a regional as well as local market, and has a concentration of businesses related to home furnishings and home improvement. There are also numerous warehouse and distribution facilities, as well as some light manufacturing
- Lacking a major grocery store
- Morena area suffers from a disorganized appearance and confusing traffic flow
- Landscaping is not cohesive
- Lacking a community-wide design character and cohesive image
- Existing trolley station at Morena Blvd and Napa Street
- Low-medium residential community with sense of community spirit and cooperation (outside our project area)
- Presence of University of San Diego (USD) (adjacent our project area, to the east)

Project Area Vision

- Moderate growth and increases in residential density
- Bus and private shuttle transportation will link into the new LRT lines
- Enhanced pedestrian travel, with improved sidewalks and landscaping
- Morena industrial area will continue to be an important job center
- Morena commercial will continue to provide regional shopping and will expand local services, particularly restaurants and a local supermarket
- Conversion of industrial land east of Napa Street to residential uses

Project Area Proposed Land Use

Relevant Recommendations for Land Use:

- Attract new restaurants and a local supermarket
- Designate area around the trolley station for mixed-use w/ ground floor retail
- Designate Morena Blvd for general commercial uses
- Promote the concentration of home furnishing and home improvement businesses along Morena Blvd
- Designate area between Hwy 5 and Morena Blvd for light industrial
- Ensure development regulations support rather than discourage needed redevelopment
- Maintain Morena industrial job center, and ensure development regulations encourage business expansion and business attraction

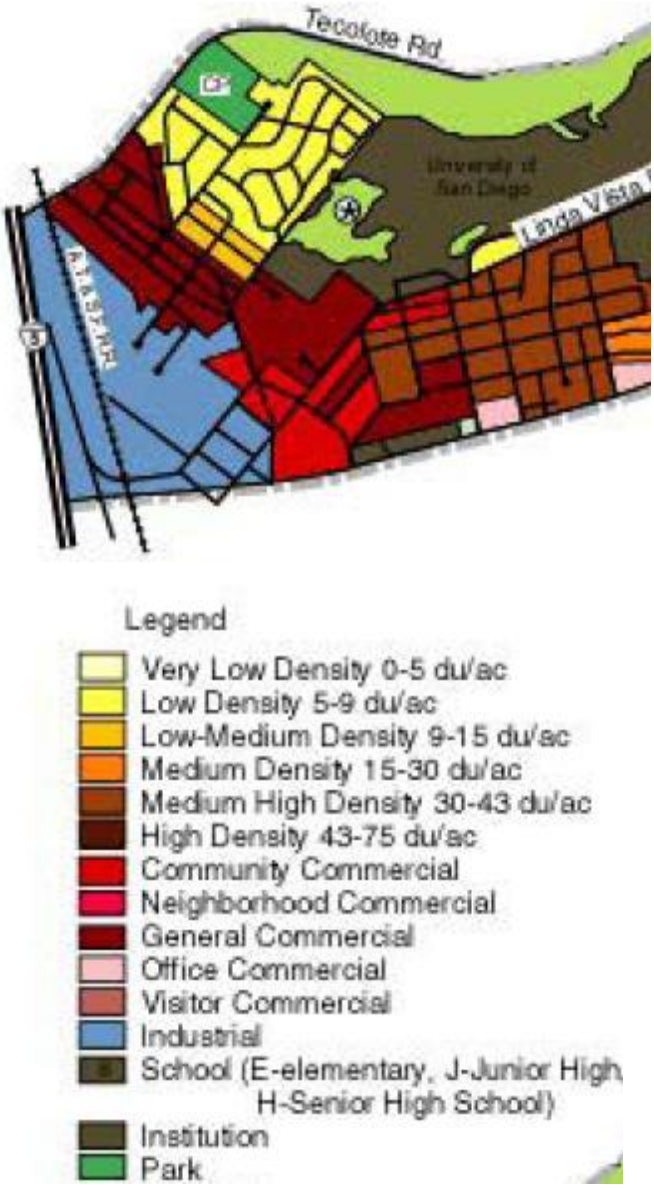

Figure B-4: Linda Vista Community Plan Proposed Land Uses

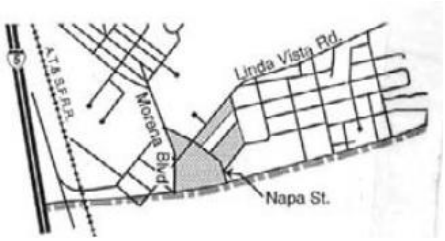

Figure B-5: Trolley station area

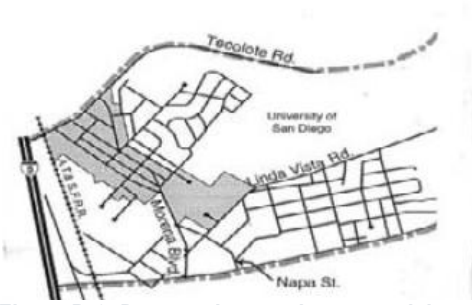

Figure B-6: Proposed general commercial designation along Morena Blvd

Figure B-7: Proposed industrial designation

Figure B-8: Proposed public art locations

Relevant Recommendations for Urban Design

- Promote beautification and a cohesive image through
  - a façade rebate program
  - undergrounding utilities
  - Coordinated signage, lighting, street furnishings and landscaping design program (see Table 1 and 2 Street Tree Plan in the Linda Vista Community Plan document)
  - public art (figure 4)
- Present positive visual image from I-5, Interstate 8, Pacific Highway and Mission Bay Park
- Pedestrian and transit-oriented features around the light rail and trolley stations
- Landmark development at the trolley station to help establish an architectural image for the community Commercial Design Standards for the Community Plan Implementation Overlay Zone (CPIOZ)

Development Feature	CPIOZ Development Standard
Building Height	Max 30' in coastal zone, otherwise max 45'
Sidewalk width	Min 7' in commercial areas, min 5' in industrial areas
Off-street parking ratios	Medical and dental office: 1 space per 250 SF Professional business office: 1 space per 300 SF Retail and commercial service 1 space per 400 SF Wholesale, distribution, and manufacturing 1 space per 1500 SF Hotel: 1 space per room

Table B-6: CPIOZ Standards

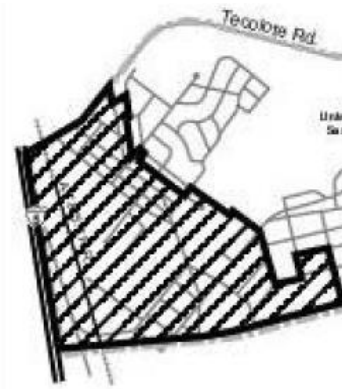

Figure B-9: Area Subject to CPIOZ regulations

Relevant Recommendations for Circulation

- Improve pedestrian environment: widen sidewalks, install lighting and benches
- Provide walkways between parking and stores
- Minimize curb cuts
- Encourage use of shuttles from transit stations
- Improve signage leading to I-5 from the Morena area
- Enhance street medians and excess right-of-way with landscaping, public art and other amenities (e.g. at juncture of Morena and West Morena Blvds.)
- Widen Napa Street to 4-lane collector between Linda Vista Rd and Morena Blvd
- Widen Morena Blvd north of Tecolote Rd
- Connect Knoxville Street to West Morena Blvd
- Improve ped and bus connections from Tecolote LRT station to Mission Bay and Morena Shopping Quarter

- Require commercial development to provide landscaping and waiting areas at transit stops
- Require commercial development to provide bike racks
- Encourage shared parking
- Rename Morena or West Morena Blvd to avoid confusion

Recommendations for the Trolley Station Site (appropriate for future LRT stations)

- Buildings should be oriented to the streets
- Provide convenient pedestrian circulation
- Develop as a landmark project
- Include amenities for transit riders and that help support transit usage
- Provide commercial uses to support local residents and students
- Provide semi-public uses, i.e. day care, plazas, outdoor seating areas, and public art
- Locate identification kiosks or displays directing passengers to adjacent attractions
-

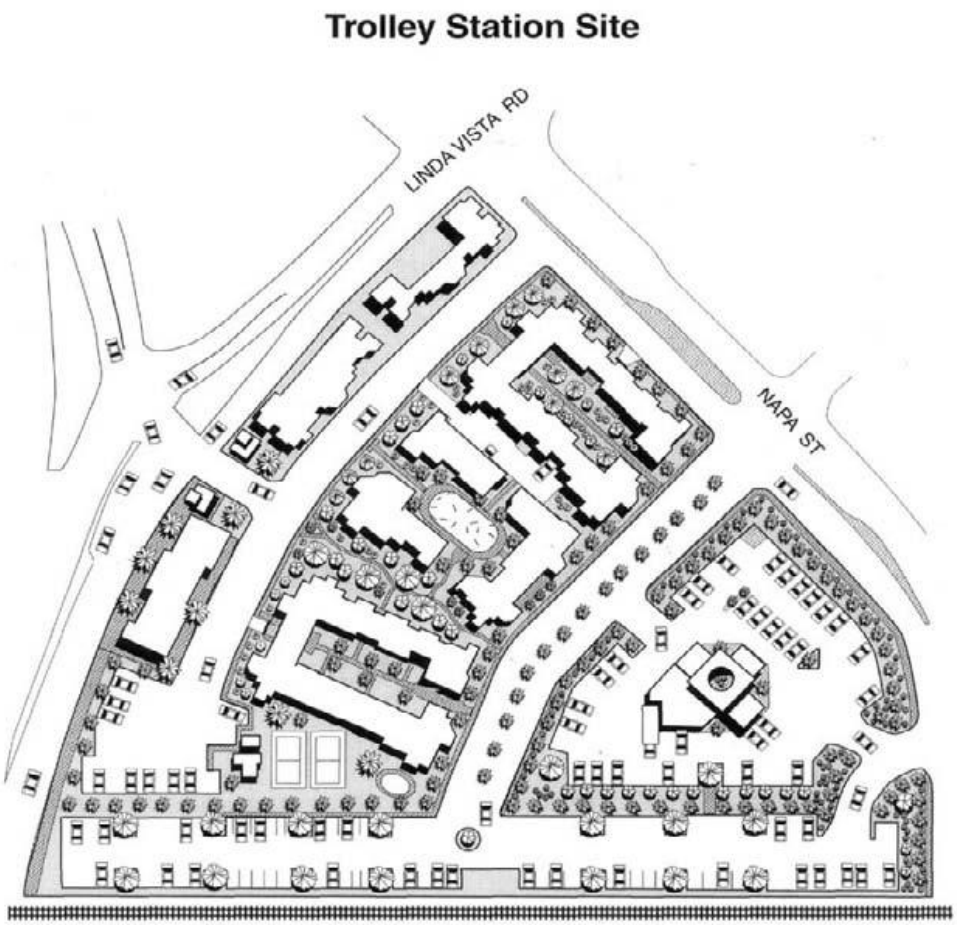

Figure B-10: Morena Blvd LRT Station Site Recommendations

B.4.4 Zoning

Zoning represents the land uses allowed and the development standards applied to the land use that each property must abide by in order to be in legal conformance with the City's regulations. While many properties are non-conforming, future development must adhere to these guidelines and zoning is the best indicator on what will be built on a particular property.

The following discussion provides details about the zoning districts comprising the study area:

Zoning Districts in the Project Area

Table B-7 identifies the current zoning districts within the project area, along with the allowed density, intensity and building heights. Table B-8 provides additional detail on types of uses allowed in each of the commercial zoning districts. Figure B-11 graphically displays the extents of the zoning districts. Zoning Districts are found in Chapter 13 Zones of the Municipal Code.

Purpose of Zoning Districts

The purpose of the RM zones is to provide for *multiple dwelling unit development* at varying densities. The RM zones individually accommodate *developments* with similar densities and characteristics. Each of the RM zones is intended to establish *development* criteria that consolidates common development regulations, accommodates specific dwelling types, and responds to locational issues regarding adjacent land uses.

The purpose of the RS zones is to provide appropriate regulations for the *development* of *single dwelling units* that accommodate a variety of *lot* sizes and residential dwelling types and which promote neighborhood quality, character, and livability. It is intended that these zones provide for flexibility in development regulations that allow reasonable use of property while minimizing adverse impacts to adjacent properties.

The purpose of the CN zones is to provide residential areas with access to a limited number of convenient retail and personal service uses. The CN zones are intended to provide areas for smaller scale, lower intensity developments that are consistent with the character of the surrounding residential areas. The zones in this category may include residential development. Property within the CN zones will be primarily located along local and selected collector streets.

The purpose of the CC zones is to accommodate community-serving commercial services, retail uses, and limited industrial uses of moderate intensity and small to medium scale. The CC zones are intended to provide for a range of development patterns from pedestrian-friendly commercial streets to shopping centers and auto-oriented strip commercial streets. Some of the CC zones may include residential development. Property within the CC zones will be primarily located along collector streets, major streets, and public transportation lines.

The purpose of the CP zone is to provide off-street parking areas for passenger automobiles. The CP zone is intended to be applied in conjunction with established commercial areas to provide needed or required off-street parking.

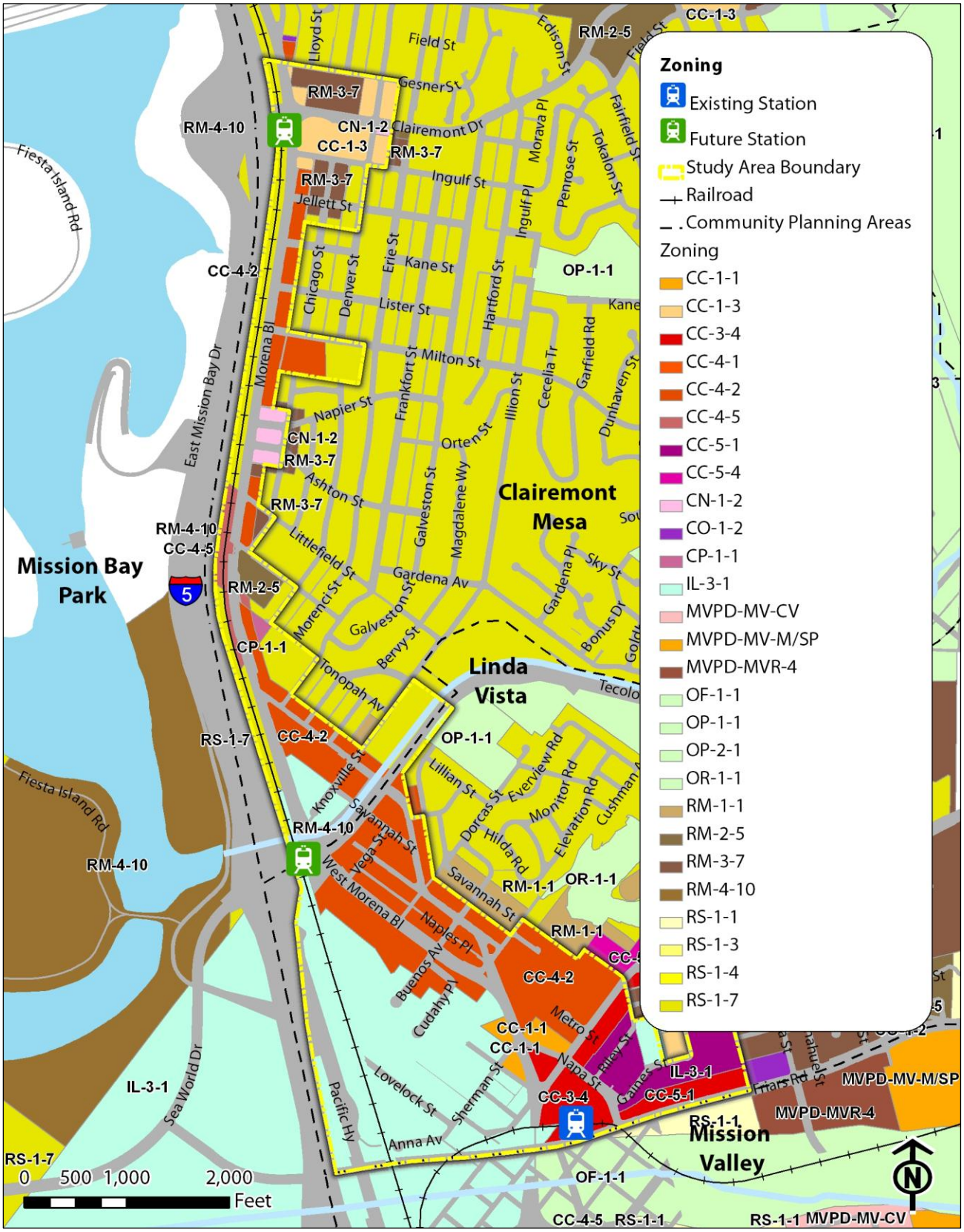

Figure B-11: Zoning

Zoning District Code	Zoning District Name	Allowed Uses (broadly)	Density	Intensity	Building Heights
Residential Districts					
RM-2-5	Residential - Multiple Unit	Medium Density Residential	maximum density of 1 du for each 1,500 square feet of lot area	Maximum 1.35 FAR	40'
RM-3-7	Residential - Multiple Unit	Medium Density Residential with limited commercial	maximum density of 1 du for each 1,000 square feet of lot area	Maximum 1.8 FAR	40'
RS-1-7	Residential – Single Unit	Single Dwelling Units	Maximum density of 1 du per lot. Requires minimum 5,000-square-foot lots	Determined by lot size. FAR ranges from 0.70 for 3,000 SF lots to 0.45 for 19,000+ SF lots.	24/30' See Section 131.0444(b)
Commercial Districts					
CN-1-2	Commercial – neighborhood (development with an auto orientation)	Convenient retail and personal service uses	n/a	Maximum FAR: 1.0	30'
CC-1-1	Community-serving Commercial (strip commercial characteristics)	mix of community-serving commercial uses and residential uses	maximum density of 1 du for each 1,500 square feet of lot area	Maximum FAR: 0.75 0.75 FAR bonus with mixed-use (75% of bonus must be residential)	30'
CC-1-3	Community-serving Commercial (*development* with an auto Orientation)	mix of community-serving commercial uses and residential uses	maximum density of 1 du for each minimum 1,500 square feet of lot area	Maximum FAR: 0.75 0.75 FAR bonus with mixed-use (75% of bonus must be residential)	45'
CC-3-4	Community-serving Commercial (development with a pedestrian orientation)	mix of pedestrian-oriented, community-serving commercial uses and residential uses	maximum density of 1 du for each minimum 1,500 square	Maximum FAR: 1.0 0.5 FAR bonus with mixed-use	30'

Table B-7: Zoning Regulations

Zoning District Code	Zoning District Name	Allowed Uses (broadly)	Density	Intensity	Building Heights
			feet of lot area	(50% of bonus must be residential)	
CC-4-2	Community-serving Commercial (high intensity, strip commercial characteristics)	heavy commercial uses and residential uses	maximum density of 1 du for each minimum 1,500 square feet of lot area	Maximum FAR: 2.0	60'
CC-4-5	Community-serving Commercial (high Intensity, pedestrian orientation)	Heavy commercial uses and residential uses	maximum density of 1 du for each minimum 1,500 square feet of lot area	Maximum FAR: 2.0 2.0 FAR bonus with mixed-use (50% of bonus must be residential)	100'
CC-5-1	Community-serving Commercial (strip commercial characteristics)	mix of heavy commercial and limited industrial uses and residential uses	maximum density of 1 du for each minimum 1,500 square feet of lot area	Maximum FAR: 0.75 0.75 FAR bonus with mixed-use (75% of bonus must be residential)	30'
CP-1-1	Commercial - Parking	Off-street parking	n/a	Maximum FAR: 1.0	30'
Industrial Districts					
IL-3-1	Industrial Light	mix of light industrial, office, and commercial uses	n/a	Maximum FAR: 2.0	No limit

Table B-7: Zoning Regulations (continued)

Commercial Zone	Types of Uses Allowed
CN zones	Retail Sales, Commercial Services, Offices,
CC zones	Retail Sales, Commercial Services, Offices, Research & Development, Vehicle & Vehicular Equipment Sales & Service
CP zone	Parking Facilities

Table B-8: Commercial Zone Allowed Uses

The purpose of the IL zones is to provide for a wide range of manufacturing and distribution activities. The development standards of this zone are intended to encourage sound industrial development by providing an attractive environment free from adverse impacts associated with some heavy industrial uses. The IL zones are intended to permit a range of uses, including nonindustrial uses in some instances.

Parking and the Transit Overlay Zone

Parking ratios are provided in Municipal Code Chapter 14, Article 2, Division 5, sections 142.0525 and 142.0530.

There is a Transit Overlay Zone transit-serving development, see Chapter 13 Article 2: Overlay Zones Division 10: Transit Area Overlay Zone. The purpose of the Transit Area Overlay Zone is to provide supplemental parking regulations for areas receiving a high level of transit service. The intent of this overlay zone is to identify areas with reduced parking demand and to lower off-street parking requirements accordingly. Parking regulations are in sections 142.0525 and 142.0530, see column titled "transit area."

The Transit Overlay Zone applies to the area immediately surrounding the LRT station at Clairemont Drive, but could be applied around the LRT station at Tecolote as well.

Clairemont Mesa Height Limit Overlay Zone

The majority of the study area is subject to the Clairemont Mesa Height Limit Overlay Zone (Article 2-Division 13) The purpose of the Clairemont Mesa Height Limit Overlay Zone is to provide supplemental height regulations for western Clairemont Mesa. The intent of these regulations is to ensure that the existing low profile development in Clairemont Mesa will be maintained and that public views from western Clairemont Mesa to Mission Bay and the Pacific Ocean are protected.

This overlay zone applies to the portion of the plan area that is bounded by Clairemont Drive to the north and Tecolote Road to the south. The overlay imposes a maximum structure height of 30 feet. For all of the below listed base zones, this overlay zone will take precedent and override the allowed height established by the base zone, restricting the majority of the plan area to 30'. This may impact the ability to achieve higher densities in the plan area.

B.4.5 Related Efforts

Other efforts that are independent of the MBAP, but related to the goals and objectives of the study include the Mid-Coast LRT Extension Project, the San Diego Pedestrian Master Plan and the San Diego Bicycle Master Plan.

B.4.6 Mid-Coast Station Planning

The Mid-Coast LRT Extension project is a SANDAG-led project examining the extension of the region's LRT system north from Old Town San Diego to the University of California, San Diego (UCSD). The proposed alignment parallels the existing railroad tracks on the west side of the MBAP study area and two new stations are planned within the study area at Tecolote Road/Sea World Drive and at Clairemont Drive.

The Mid-Coast study examines the planning and siting of LRT-related facilities, including stations. The Mid-Coast study analyzes the dynamics of the area surrounding the proposed LRT facilities and makes recommendations both for MTS property and public ROW in the vicinity of the proposed facilities.

B.4.7 San Diego Pedestrian Master Plan

The San Diego Pedestrian Master Plan provides a comprehensive framework for identifying, prioritizing, and implementing pedestrian projects within each community plan area, with the goal of enhancing neighborhood quality and mobility options. The Plan's framework also discusses existing pedestrian conditions, pedestrian-related City policies, and potential project funding sources.

The Pedestrian Master Plan has been, and will be, implemented per individual community plan areas. Incorporating the methods established in the Plan's framework, the City and the community work together to identify and prioritize potential projects to improve the pedestrian environment.

Phase I, which provided the implementation framework, was completed in December 2006. Phases II, III, and IV, which include the communities of Greater North Park, Southeastern San Diego, Greater Golden Hill, Uptown, Normal Heights, Barrio Logan, City Heights, College, Kensington/Talmadge, Midway/Pacific Highway, Old San Diego, Ocean Beach, Pacific Beach, and San Ysidro are either completed or on-going.

B.4.8 San Diego Bicycle Master Plan

The City of San Diego Bicycle Master Plan Update seeks to produce a renewed bicycle plan for the City and provides a framework for making cycling a more practical and convenient transportation option for a wide variety of San Diegans with different riding purposes and skill levels. The plan update evaluates and builds on the 2002 Bicycle Master Plan so that it reflects changes in bicycle user needs and changes to the City's bicycle network and overall infrastructure.

The final report was submitted in June 2011.

B.5 Regulatory Setting

The implications of the land use planning documents and zoning discussed in previous sections include a range of development intensities for properties within the study area. Analysis of this range is key to understanding which properties are already poised to meet future needs and which will be constrained.

B.5.1 Allowable Range of Land Uses

As described above, the IL, CC, and CN zoning designations provide for flexibility in uses, including some non-industrial uses in the IL zone, and commercial and residential uses in the CC and CN zones. RM zones are exclusively residential, but allow for a range of intensity of development.

B.5.2 Allowable Range of Densities

The maximum allowable density for each zoning category was determined for zones which allowed residential dwelling units (du). Figure B-12 shows that almost all of the study area has a maximum residential du standard of 1 du/1,500 square feet. This equates to approximately 29 du/acre. The multi-family zones near Clairemont Drive have a higher density limit, at 1 du/1,000 square feet, or almost 44 du/acre.

B.5.3 Allowable Range of Building Heights

Figure B-13 displays the current height limits of properties within the study area. The range of height limits is dramatic, ranging from 24/30 feet to no limit. The no limit portion of the study area is tied to the industrial properties to the south/southwestern. Much of the commercial properties along Morena/W Morena have a height limit of 60 feet, and the other properties between Friars and Ingulf Street have a limit between 30-40 feet. The Properties surrounding the Clairemont Drive/Morena Boulevard intersection have height limits of 40-45 feet. Although not in the study area, it should be noted that the single family neighborhoods to the east of the study area have the lowest height limit at 24/30 feet, approximately 30 feet less than the commercial areas that line much of Morena Boulevard.

B.5.4 Allowable Range of Floor Area Ratios

The variety of FAR permitted within the study area ranges fairly dramatically, from 0.75 to 2.0. The properties with a 2.0 FAR cover most of the study area – the only areas that have lesser FARs occur south of the southern Morena/W Morena split, near Asher Street, between Ashton and Napier Streets, and north of Ingulf Street (see Figure B-14).

The areas to the east of the study area have a variety of FARs, or their zoning does not directly correspond to a specific FAR. The properties to the south of Linda Vista Road (east of the study area) generally have a 1.8 FAR.

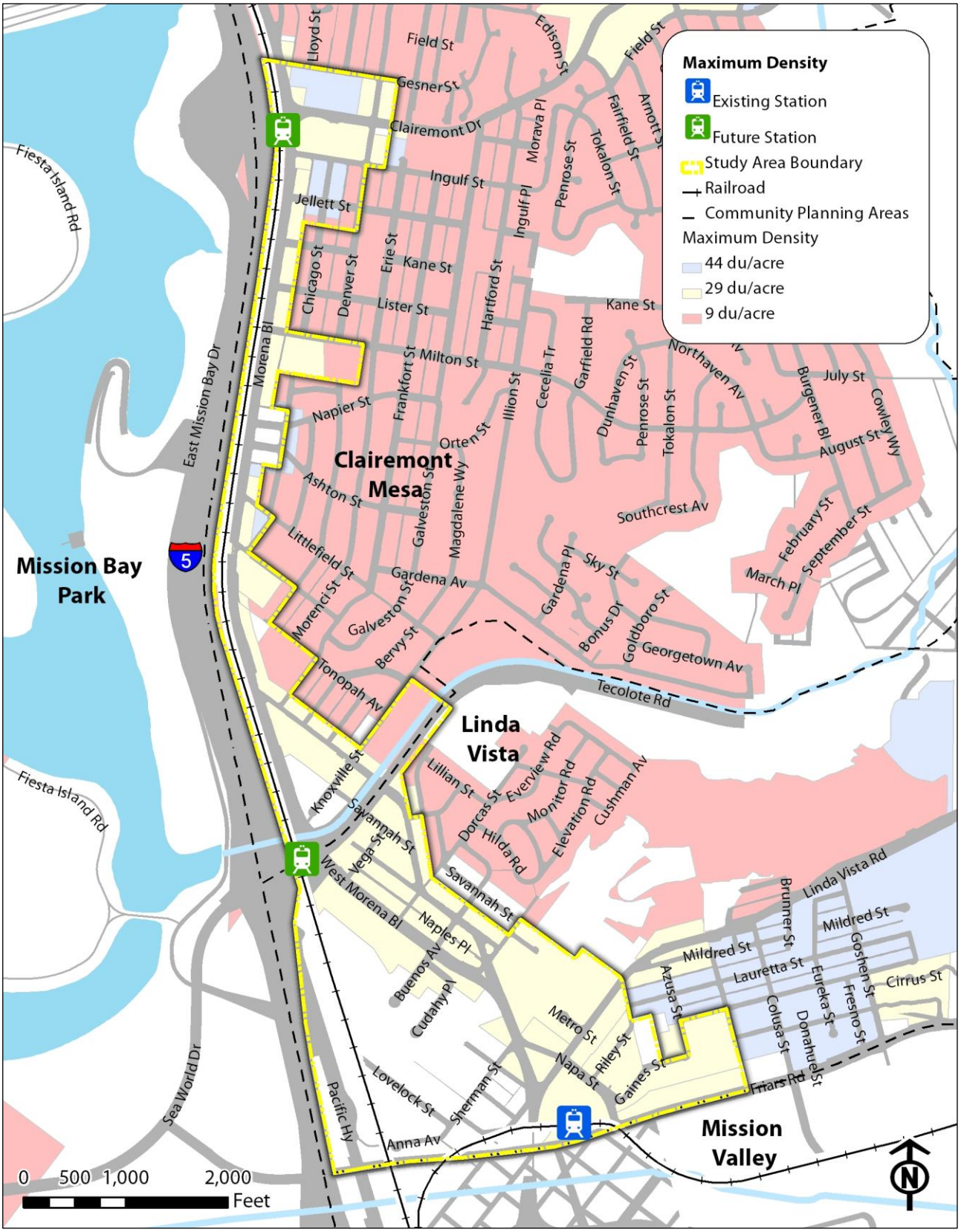

Figure B-12: Maximum Residential Density

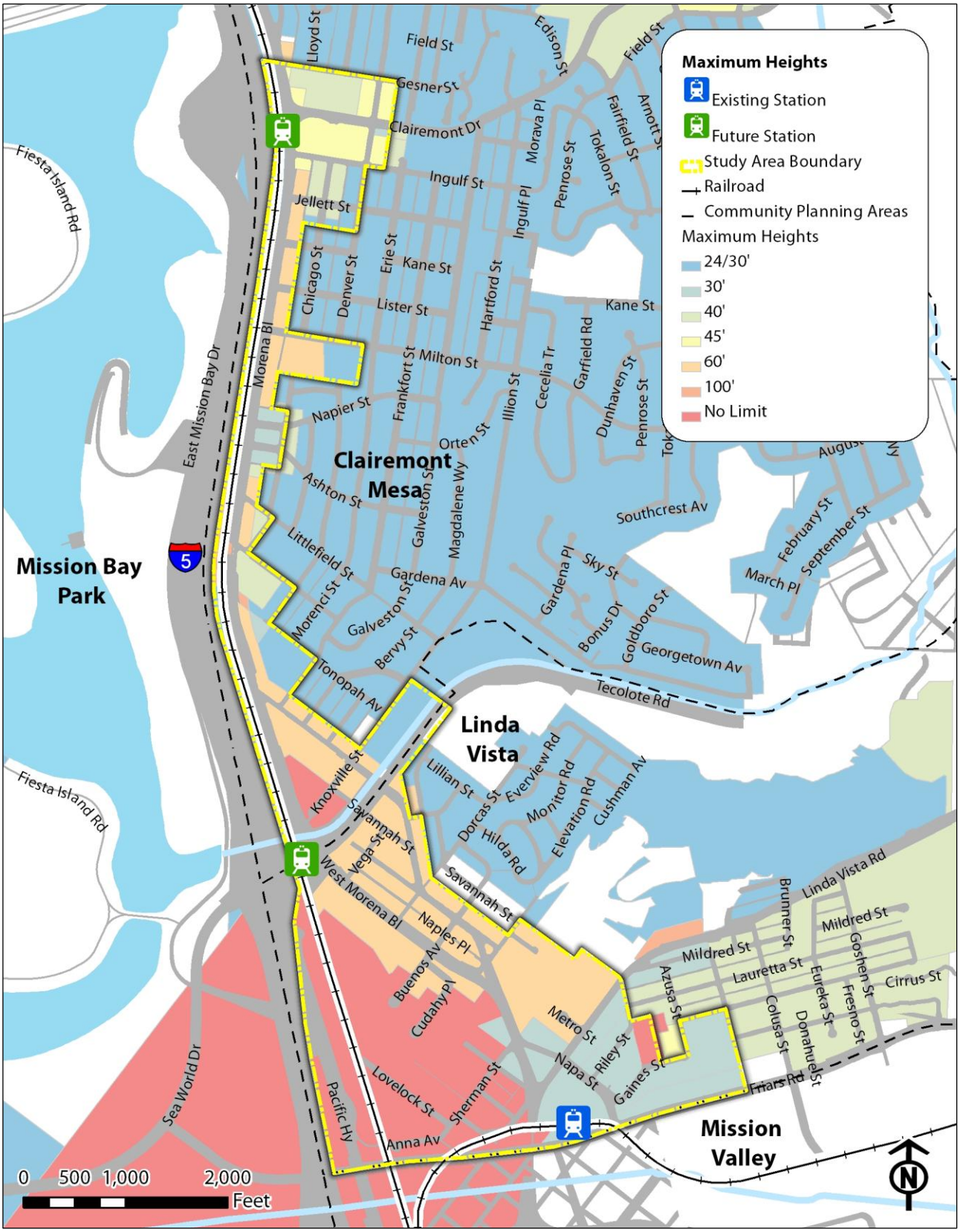

Figure B-13: Maximum Building Heights

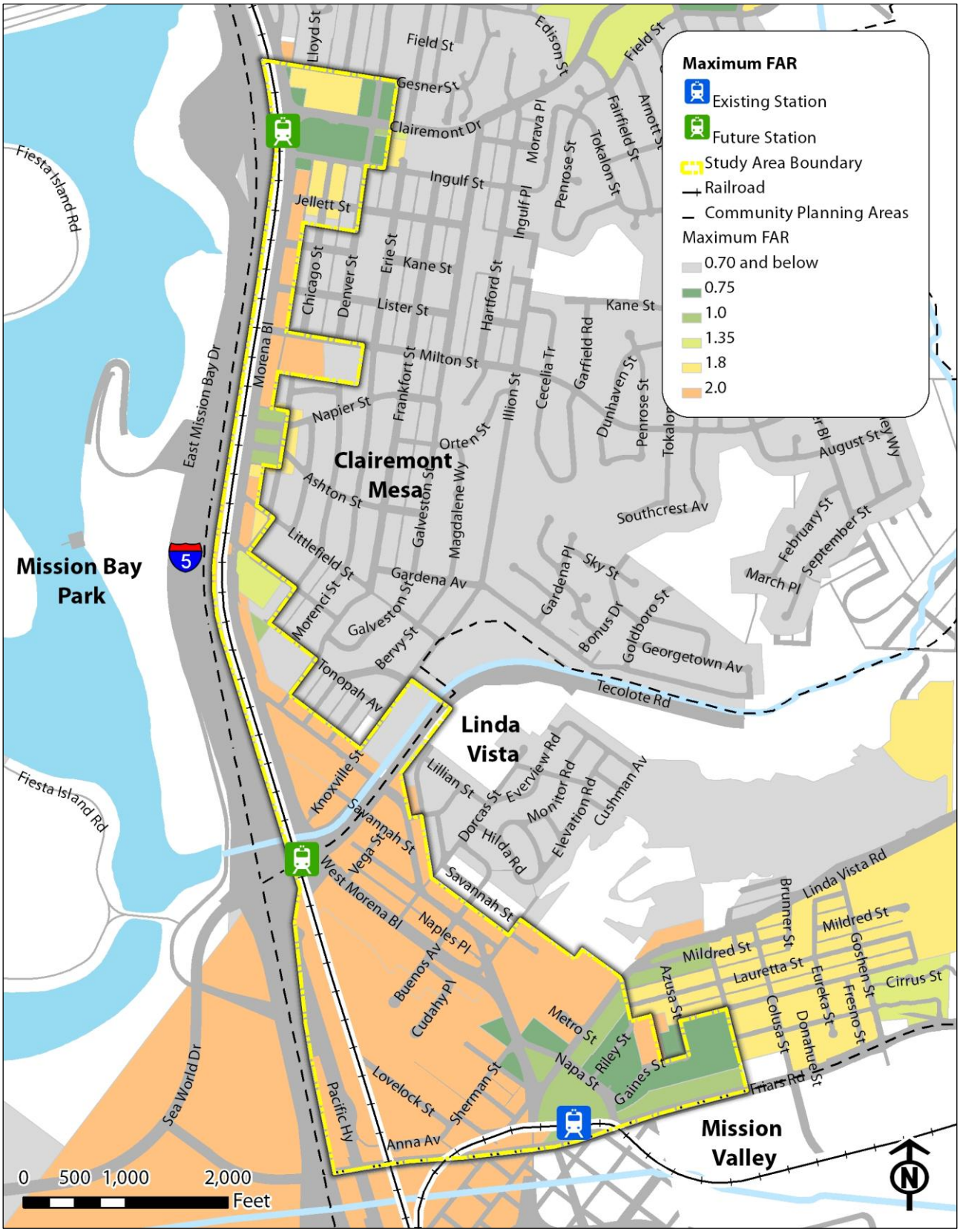

Figure B-14: Maximum FAR

Morena Blvd Station Area Planning Study

Appendix C:
Existing Conditions Traffic Analysis

Contents:

- Peak Hour Turning Movements - Vehicles
- Peak Hour Intersection Counts - Pedestrians and Bicycles
- Daily Traffic Volume Count Data
- LOS Reports - Existing Conditions
- Intersection Geometry Diagrams
- Signal Timing Reports - Coordinated
- Signal Timing Reports - Stand Alone

Morena Blvd Station Area Planning Study

Appendix C:

Peak Hour Turning Movements - Vehicles

True Count

6520 Lemarand Ave
San Diego, CA 92115

File Name : 01.MORENA BLVD.GESNER ST
Site Code : 00000000
Start Date : 2/6/2013
Page No : 1

Groups Printed- Vehicles

	MORENA BLVD Southbound				GESNER ST Westbound				MORENA BLVD Northbound				Eastbound				
Start Time	Left	Thru	Right	Peds	Left	Thru	Right	Peds	Left	Thru	Right	Peds	Left	Thru	Right	Peds	Int. Total
07:00	11	48	0	0	6	0	9	0	0	61	3	0	0	0	0	0	138
07:15	16	58	0	0	6	0	9	0	0	66	5	0	0	0	0	0	160
07:30	12	81	0	0	7	0	15	0	0	92	6	0	0	0	0	0	213
07:45	7	87	0	0	11	0	20	0	0	123	8	0	0	0	0	0	256
Total	46	274	0	0	30	0	53	0	0	342	22	0	0	0	0	0	767
08:00	11	65	0	0	6	0	12	0	0	177	6	0	0	0	0	0	277
08:15	14	77	0	0	7	0	10	0	0	109	16	0	0	0	0	0	233
08:30	12	78	0	0	13	0	20	0	0	118	7	0	0	0	0	0	248
08:45	17	96	0	0	9	0	15	0	0	99	7	0	0	0	0	0	243
Total	54	316	0	0	35	0	57	0	0	503	36	0	0	0	0	0	1001
*** BREAK ***																	
16:00	13	93	0	0	3	0	24	0	0	89	7	0	0	0	0	0	229
16:15	21	85	0	0	4	0	14	0	0	101	12	0	0	0	0	0	237
16:30	12	95	0	0	4	0	16	0	0	83	6	0	0	0	0	0	216
16:45	19	107	0	0	5	0	9	0	0	100	13	0	0	0	0	0	253
Total	65	380	0	0	16	0	63	0	0	373	38	0	0	0	0	0	935
17:00	25	115	0	0	7	0	18	0	0	102	16	0	0	0	0	0	283
17:15	28	135	0	0	6	0	17	0	0	99	8	0	0	0	0	0	293
17:30	39	153	0	0	8	0	10	0	0	100	9	0	0	0	0	0	319
17:45	31	137	0	0	7	0	13	0	0	83	8	0	0	0	0	0	279
Total	123	540	0	0	28	0	58	0	0	384	41	0	0	0	0	0	1174
Grand Total	288	1510	0	0	109	0	231	0	0	1602	137	0	0	0	0	0	3877
Apprch %	16	84	0	0	32.1	0	67.9	0	0	92.1	7.9	0	0	0	0	0	
Total %	7.4	38.9	0	0	2.8	0	6	0	0	41.3	3.5	0	0	0	0	0	

True Count

6520 Lemarand Ave
San Diego, CA 92115

File Name : 01.MORENA BLVD.GESNER ST
Site Code : 00000000
Start Date : 2/6/2013
Page No : 2

	MORENA BLVD Southbound					GESNER ST Westbound					MORENA BLVD Northbound					Eastbound					
Start Time	**Left**	**Thru**	**Right**	**Peds**	**App. Total**	**Left**	**Thru**	**Right**	**Peds**	**App. Total**	**Left**	**Thru**	**Right**	**Peds**	**App. Total**	**Left**	**Thru**	**Right**	**Peds**	**App. Total**	**Int. Total**
Peak Hour Analysis From 07:00 to 11:45 - Peak 1 of 1																					
Peak Hour for Entire Intersection Begins at 07:45																					
07:45	7	87	0	0	94	11	0	20	0	31	0	123	8	0	131	0	0	0	0	0	256
08:00	11	65	0	0	76	6	0	12	0	18	0	177	6	0	183	0	0	0	0	0	277
08:15	14	77	0	0	91	7	0	10	0	17	0	109	16	0	125	0	0	0	0	0	233
08:30	12	78	0	0	90	13	0	20	0	33	0	118	7	0	125	0	0	0	0	0	248
Total Volume	44	307	0	0	351	37	0	62	0	99	0	527	37	0	564	0	0	0	0	0	1014
% App. Total	12.5	87.5	0	0		37.4	0	62.6	0		0	93.4	6.6	0		0	0	0	0		
PHF	.786	.882	.000	.000	.934	.712	.000	.775	.000	.750	.000	.744	.578	.000	.770	.000	.000	.000	.000	.000	.915

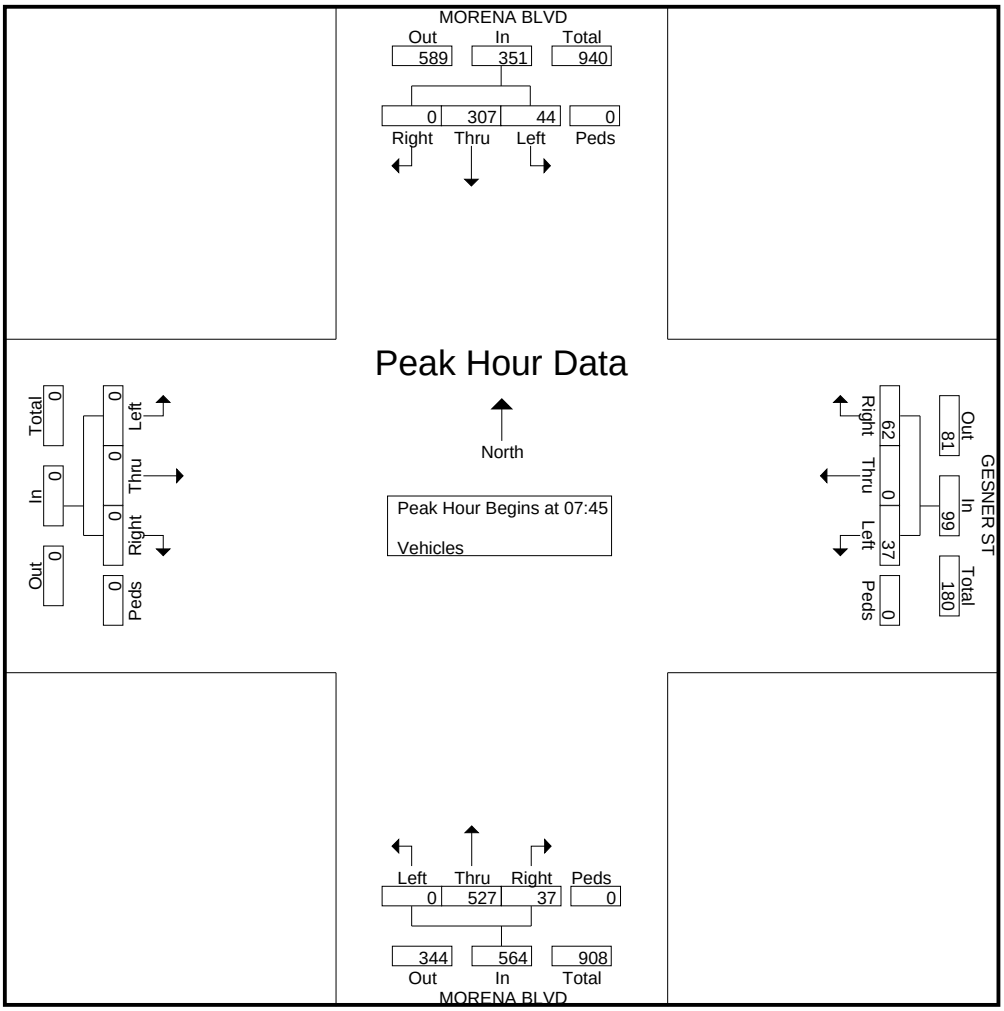

True Count

6520 Lemarand Ave
San Diego, CA 92115

File Name : 01.MORENA BLVD.GESNER ST
Site Code : 00000000
Start Date : 2/6/2013
Page No : 3

	MORENA BLVD Southbound					GESNER ST Westbound					MORENA BLVD Northbound					Eastbound					
Start Time	**Left**	**Thru**	**Right**	**Peds**	**App. Total**	**Left**	**Thru**	**Right**	**Peds**	**App. Total**	**Left**	**Thru**	**Right**	**Peds**	**App. Total**	**Left**	**Thru**	**Right**	**Peds**	**App. Total**	**Int. Total**
Peak Hour Analysis From 12:00 to 17:45 - Peak 1 of 1																					
Peak Hour for Entire Intersection Begins at 17:00																					
17:00	25	115	0	0	140	7	0	18	0	25	0	102	16	0	118	0	0	0	0	0	283
17:15	28	135	0	0	163	6	0	17	0	23	0	99	8	0	107	0	0	0	0	0	293
17:30	39	153	0	0	192	8	0	10	0	18	0	100	9	0	109	0	0	0	0	0	319
17:45	31	137	0	0	168	7	0	13	0	20	0	83	8	0	91	0	0	0	0	0	279
Total Volume	123	540	0	0	663	28	0	58	0	86	0	384	41	0	425	0	0	0	0	0	1174
% App. Total	18.6	81.4	0	0		32.6	0	67.4	0		0	90.4	9.6	0		0	0	0	0		
PHF	.788	.882	.000	.000	.863	.875	.000	.806	.000	.860	.000	.941	.641	.000	.900	.000	.000	.000	.000	.000	.920

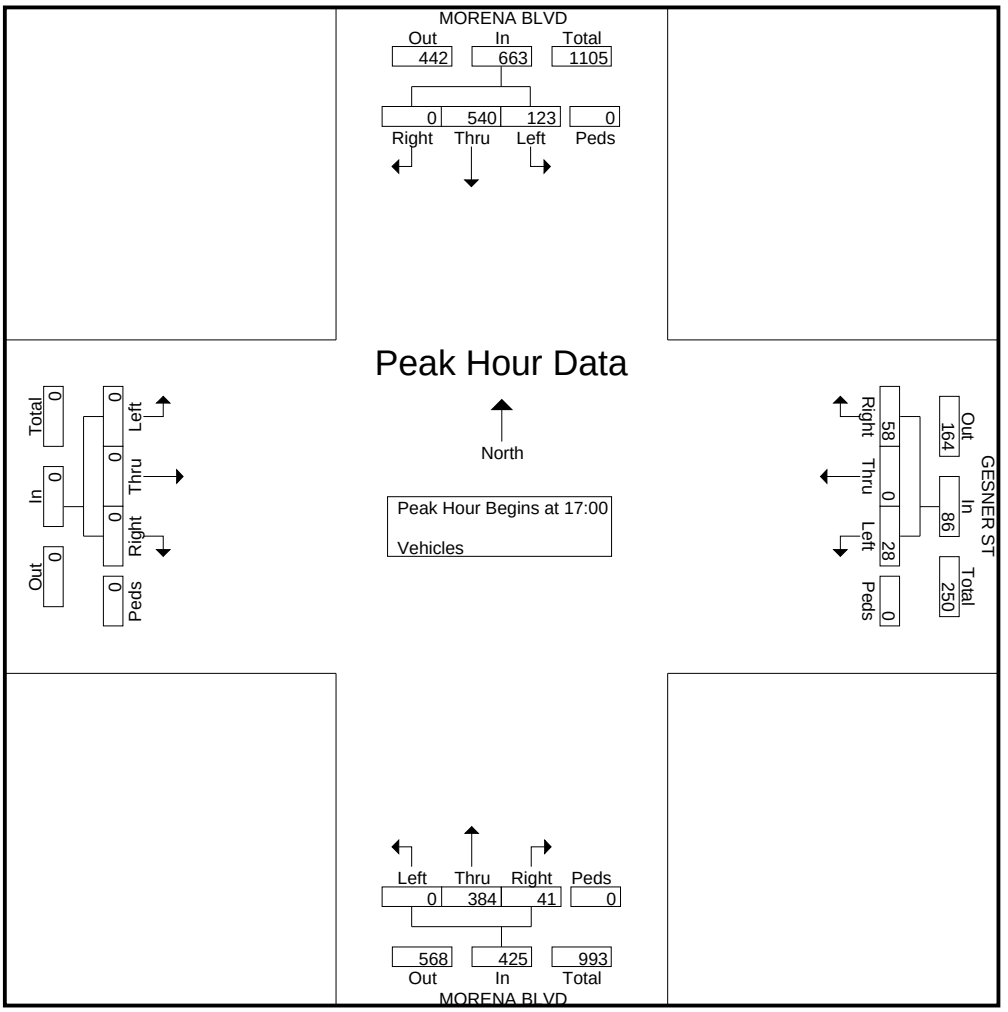

True Count

6520 Lemarand Ave
San Diego, CA 92115

File Name : 02.I-5 NB RAMPS.CLAIREMONT DR
Site Code : 00000000
Start Date : 2/13/2013
Page No : 1

Groups Printed- Vehicles

	I-5 NB RAMPS Southbound				CLAIREMONT DR Westbound				I-5 NB RAMPS Northbound				CLAIREMONT DR Eastbound				
Start Time	Left	Thru	Right	Peds	Left	Thru	Right	Peds	Left	Thru	Right	Peds	Left	Thru	Right	Peds	Int. Total
07:00	0	0	0	0	0	173	144	0	9	0	66	0	15	48	0	0	455
07:15	0	0	0	0	0	219	187	0	10	0	52	0	56	54	0	0	578
07:30	0	0	0	0	0	226	165	0	9	0	46	0	69	64	0	0	579
07:45	0	0	0	0	0	224	160	0	8	0	61	0	68	83	0	0	604
Total	0	0	0	0	0	842	656	0	36	0	225	0	208	249	0	0	2216
08:00	0	0	0	0	0	210	169	0	7	0	78	0	64	92	0	0	620
08:15	0	0	0	0	0	192	151	0	12	0	77	0	72	74	0	0	578
08:30	0	0	0	0	0	211	177	0	7	0	95	0	46	87	0	0	623
08:45	0	0	0	0	0	159	141	0	8	0	99	0	35	85	0	0	527
Total	0	0	0	0	0	772	638	0	34	0	349	0	217	338	0	0	2348
*** BREAK ***																	
16:00	0	0	0	0	0	151	103	0	24	0	179	0	12	142	0	0	611
16:15	0	0	0	0	0	152	95	0	22	0	165	0	19	168	0	0	621
16:30	0	0	0	0	0	147	73	0	31	0	187	0	27	173	0	0	638
16:45	0	0	0	0	0	163	77	0	28	0	181	0	22	181	0	0	652
Total	0	0	0	0	0	613	348	0	105	0	712	0	80	664	0	0	2522
17:00	0	0	0	0	0	167	91	0	22	0	201	0	25	203	0	0	709
17:15	0	0	0	0	0	170	87	0	46	0	211	0	29	173	0	0	716
17:30	0	0	0	0	0	163	97	0	21	0	194	0	21	164	0	0	660
17:45	0	0	0	0	0	177	82	0	24	0	176	0	31	150	0	0	640
Total	0	0	0	0	0	677	357	0	113	0	782	0	106	690	0	0	2725
Grand Total	0	0	0	0	0	2904	1999	0	288	0	2068	0	611	1941	0	0	9811
Apprch %	0	0	0	0	0	59.2	40.8	0	12.2	0	87.8	0	23.9	76.1	0	0	
Total %	0	0	0	0	0	29.6	20.4	0	2.9	0	21.1	0	6.2	19.8	0	0	

True Count

6520 Lemarand Ave
San Diego, CA 92115

File Name : 02.I-5 NB RAMPS.CLAIREMONT DR
Site Code : 00000000
Start Date : 2/13/2013
Page No : 2

	I-5 NB RAMPS Southbound					CLAIREMONT DR Westbound					I-5 NB RAMPS Northbound					CLAIREMONT DR Eastbound					
Start Time	**Left**	**Thru**	**Right**	**Peds**	**App. Total**	**Left**	**Thru**	**Right**	**Peds**	**App. Total**	**Left**	**Thru**	**Right**	**Peds**	**App. Total**	**Left**	**Thru**	**Right**	**Peds**	**App. Total**	**Int. Total**
Peak Hour Analysis From 07:00 to 11:45 - Peak 1 of 1																					
Peak Hour for Entire Intersection Begins at 07:45																					
07:45	0	0	0	0	0	0	224	160	0	384	8	0	61	0	69	68	83	0	0	151	604
08:00	0	0	0	0	0	0	210	169	0	379	7	0	78	0	85	64	92	0	0	156	620
08:15	0	0	0	0	0	0	192	151	0	343	12	0	77	0	89	72	74	0	0	146	578
08:30	0	0	0	0	0	0	211	177	0	388	7	0	95	0	102	46	87	0	0	133	623
Total Volume	0	0	0	0	0	0	837	657	0	1494	34	0	311	0	345	250	336	0	0	586	2425
% App. Total	0	0	0	0		0	56	44	0		9.9	0	90.1	0		42.7	57.3	0	0		
PHF	.000	.000	.000	.000	.000	.000	.934	.928	.000	.963	.708	.000	.818	.000	.846	.868	.913	.000	.000	.939	.973

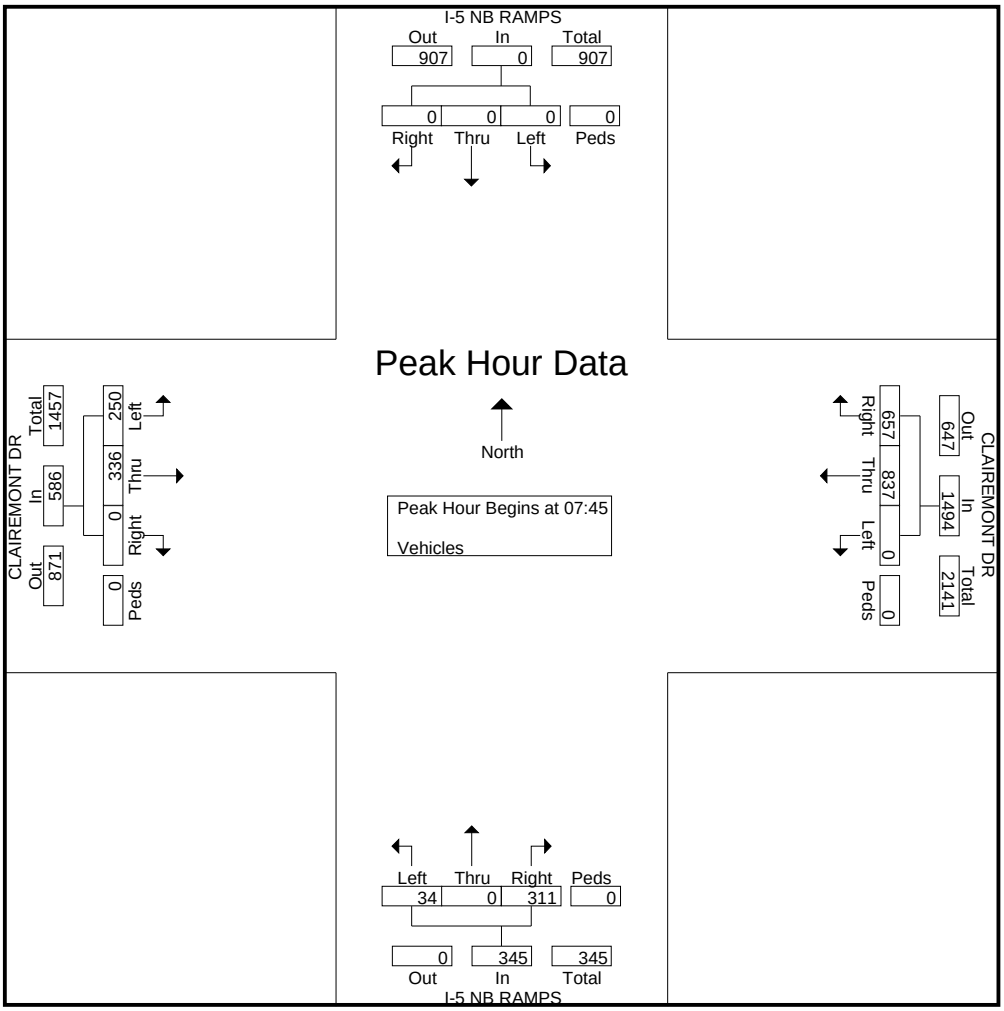

True Count

6520 Lemarand Ave
San Diego, CA 92115

File Name : 02.I-5 NB RAMPS.CLAIREMONT DR
Site Code : 00000000
Start Date : 2/13/2013
Page No : 3

	I-5 NB RAMPS Southbound					CLAIREMONT DR Westbound					I-5 NB RAMPS Northbound					CLAIREMONT DR Eastbound					
Start Time	**Left**	**Thru**	**Right**	**Peds**	**App. Total**	**Left**	**Thru**	**Right**	**Peds**	**App. Total**	**Left**	**Thru**	**Right**	**Peds**	**App. Total**	**Left**	**Thru**	**Right**	**Peds**	**App. Total**	**Int. Total**
Peak Hour Analysis From 12:00 to 17:45 - Peak 1 of 1																					
Peak Hour for Entire Intersection Begins at 16:45																					
16:45	0	0	0	0	0	0	163	77	0	240	28	0	181	0	209	22	181	0	0	203	652
17:00	0	0	0	0	0	0	167	91	0	258	22	0	201	0	223	25	203	0	0	228	709
17:15	0	0	0	0	0	0	170	87	0	257	46	0	211	0	257	29	173	0	0	202	716
17:30	0	0	0	0	0	0	163	97	0	260	21	0	194	0	215	21	164	0	0	185	660
Total Volume	0	0	0	0	0	0	663	352	0	1015	117	0	787	0	904	97	721	0	0	818	2737
% App. Total	0	0	0	0		0	65.3	34.7	0		12.9	0	87.1	0		11.9	88.1	0	0		
PHF	.000	.000	.000	.000	.000	.000	.975	.907	.000	.976	.636	.000	.932	.000	.879	.836	.888	.000	.000	.897	.956

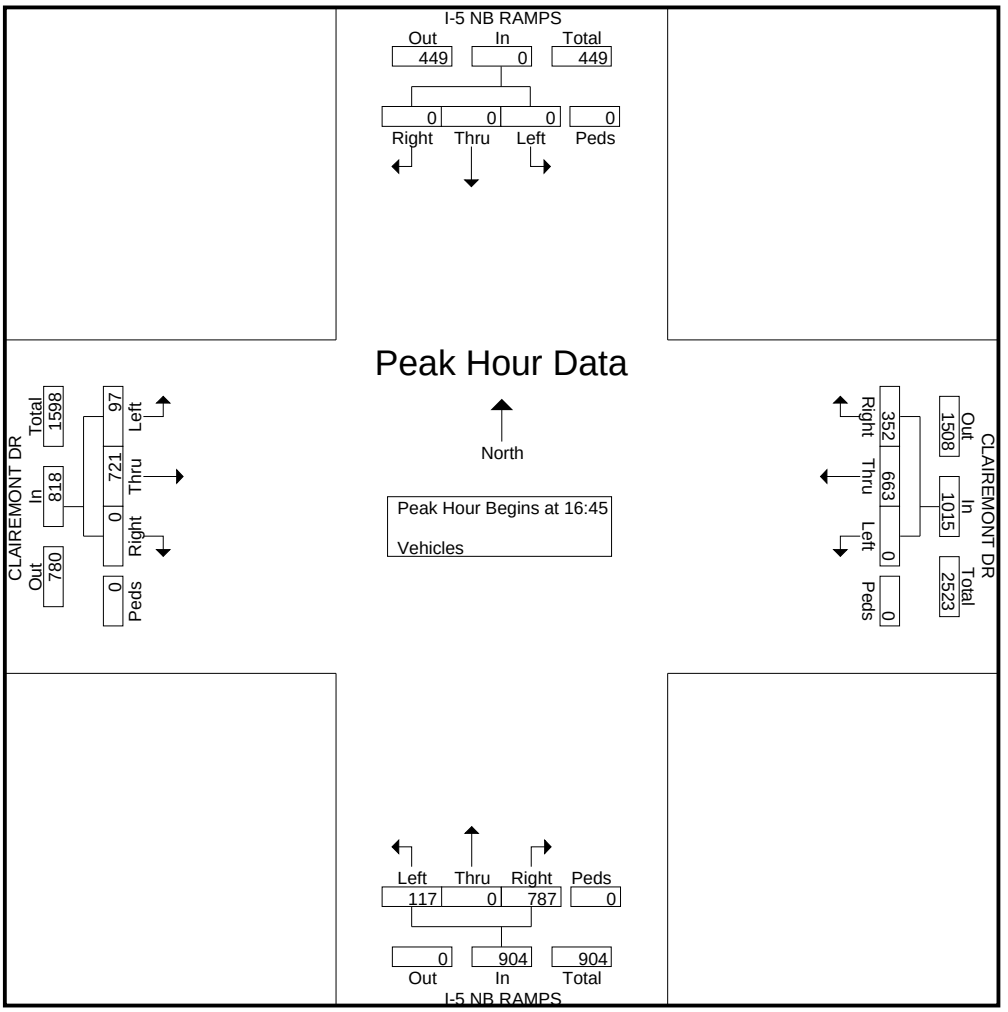

True Count

6520 Lemarand Ave
San Diego, CA 92115

File Name : 03.MORENA BLVD.INGULF ST
Site Code : 00000000
Start Date : 2/6/2013
Page No : 1

Groups Printed- Vehicles

	MORENA BLVD Southbound				INGULF ST Westbound				MORENA BLVD Northbound				Eastbound				
Start Time	Left	Thru	Right	Peds	Left	Thru	Right	Peds	Left	Thru	Right	Peds	Left	Thru	Right	Peds	Int. Total
07:00	2	49	0	0	17	0	3	0	0	66	14	0	0	0	0	0	151
07:15	4	66	0	0	11	0	3	0	0	61	31	0	0	0	0	0	176
07:30	2	71	0	0	19	0	1	0	0	92	31	0	0	0	0	0	216
07:45	0	104	0	0	27	0	6	0	0	114	29	0	0	0	0	0	280
Total	8	290	0	0	74	0	13	0	0	333	105	0	0	0	0	0	823
08:00	4	65	0	0	17	0	13	0	0	180	37	0	0	0	0	0	316
08:15	2	85	0	0	25	0	8	0	0	120	47	0	0	0	0	0	287
08:30	7	79	0	0	16	0	9	0	0	112	36	0	0	0	0	0	259
08:45	6	102	0	0	27	0	7	0	0	101	37	0	0	0	0	0	280
Total	19	331	0	0	85	0	37	0	0	513	157	0	0	0	0	0	1142
*** BREAK ***																	
16:00	4	94	0	0	32	0	7	0	0	87	43	0	0	0	0	0	267
16:15	2	84	0	0	31	0	9	0	0	102	43	0	0	0	0	0	271
16:30	2	83	0	0	39	0	8	0	0	89	60	0	0	0	0	0	281
16:45	5	101	0	0	46	0	9	0	0	95	49	0	0	0	0	0	305
Total	13	362	0	0	148	0	33	0	0	373	195	0	0	0	0	0	1124
17:00	10	116	0	0	54	0	4	0	0	105	44	0	0	0	0	0	333
17:15	5	139	0	0	45	0	4	0	0	97	50	0	0	0	0	0	340
17:30	7	142	0	0	42	0	7	0	0	106	39	0	0	0	0	0	343
17:45	7	138	0	0	34	0	8	0	0	90	42	0	0	0	0	0	319
Total	29	535	0	0	175	0	23	0	0	398	175	0	0	0	0	0	1335
Grand Total	69	1518	0	0	482	0	106	0	0	1617	632	0	0	0	0	0	4424
Apprch %	4.3	95.7	0	0	82	0	18	0	0	71.9	28.1	0	0	0	0	0	
Total %	1.6	34.3	0	0	10.9	0	2.4	0	0	36.6	14.3	0	0	0	0	0	

True Count

6520 Lemarand Ave
San Diego, CA 92115

File Name : 03.MORENA BLVD.INGULF ST
Site Code : 00000000
Start Date : 2/6/2013
Page No : 2

	MORENA BLVD Southbound					INGULF ST Westbound					MORENA BLVD Northbound					Eastbound					
Start Time	**Left**	**Thru**	**Right**	**Peds**	**App. Total**	**Left**	**Thru**	**Right**	**Peds**	**App. Total**	**Left**	**Thru**	**Right**	**Peds**	**App. Total**	**Left**	**Thru**	**Right**	**Peds**	**App. Total**	**Int. Total**
Peak Hour Analysis From 07:00 to 11:45 - Peak 1 of 1																					
Peak Hour for Entire Intersection Begins at 07:45																					
07:45	0	104	0	0	104	27	0	6	0	33	0	114	29	0	143	0	0	0	0	0	280
08:00	4	65	0	0	69	17	0	13	0	30	0	180	37	0	217	0	0	0	0	0	316
08:15	2	85	0	0	87	25	0	8	0	33	0	120	47	0	167	0	0	0	0	0	287
08:30	7	79	0	0	86	16	0	9	0	25	0	112	36	0	148	0	0	0	0	0	259
Total Volume	13	333	0	0	346	85	0	36	0	121	0	526	149	0	675	0	0	0	0	0	1142
% App. Total	3.8	96.2	0	0		70.2	0	29.8	0		0	77.9	22.1	0		0	0	0	0		
PHF	.464	.800	.000	.000	.832	.787	.000	.692	.000	.917	.000	.731	.793	.000	.778	.000	.000	.000	.000	.000	.903

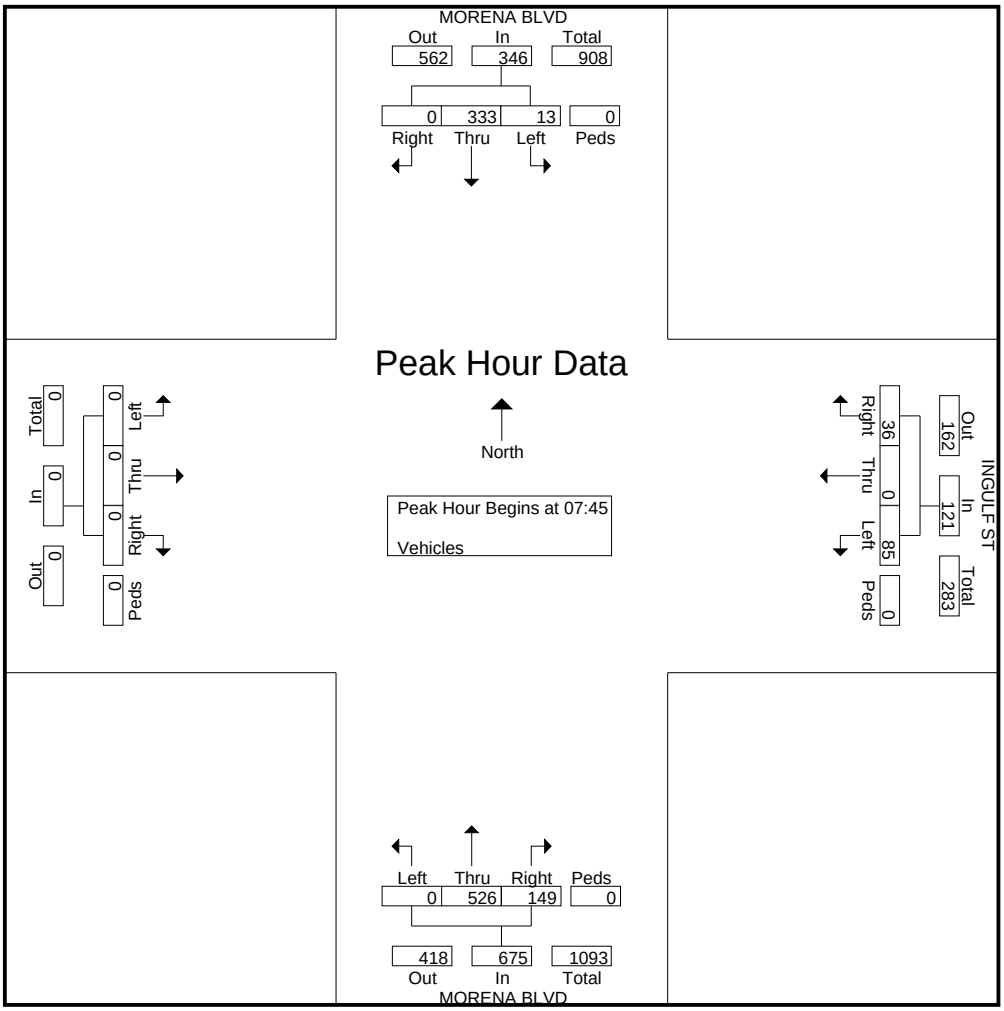

True Count

6520 Lemarand Ave
San Diego, CA 92115

File Name : 03.MORENA BLVD.INGULF ST
Site Code : 00000000
Start Date : 2/6/2013
Page No : 3

	MORENA BLVD Southbound					INGULF ST Westbound					MORENA BLVD Northbound					Eastbound					
Start Time	**Left**	**Thru**	**Right**	**Peds**	**App. Total**	**Left**	**Thru**	**Right**	**Peds**	**App. Total**	**Left**	**Thru**	**Right**	**Peds**	**App. Total**	**Left**	**Thru**	**Right**	**Peds**	**App. Total**	**Int. Total**
Peak Hour Analysis From 12:00 to 17:45 - Peak 1 of 1																					
Peak Hour for Entire Intersection Begins at 17:00																					
17:00	10	116	0	0	126	54	0	4	0	58	0	105	44	0	149	0	0	0	0	0	333
17:15	5	139	0	0	144	45	0	4	0	49	0	97	50	0	147	0	0	0	0	0	340
17:30	7	142	0	0	149	42	0	7	0	49	0	106	39	0	145	0	0	0	0	0	343
17:45	7	138	0	0	145	34	0	8	0	42	0	90	42	0	132	0	0	0	0	0	319
Total Volume	29	535	0	0	564	175	0	23	0	198	0	398	175	0	573	0	0	0	0	0	1335
% App. Total	5.1	94.9	0	0		88.4	0	11.6	0		0	69.5	30.5	0		0	0	0	0		
PHF	.725	.942	.000	.000	.946	.810	.000	.719	.000	.853	.000	.939	.875	.000	.961	.000	.000	.000	.000	.000	.973

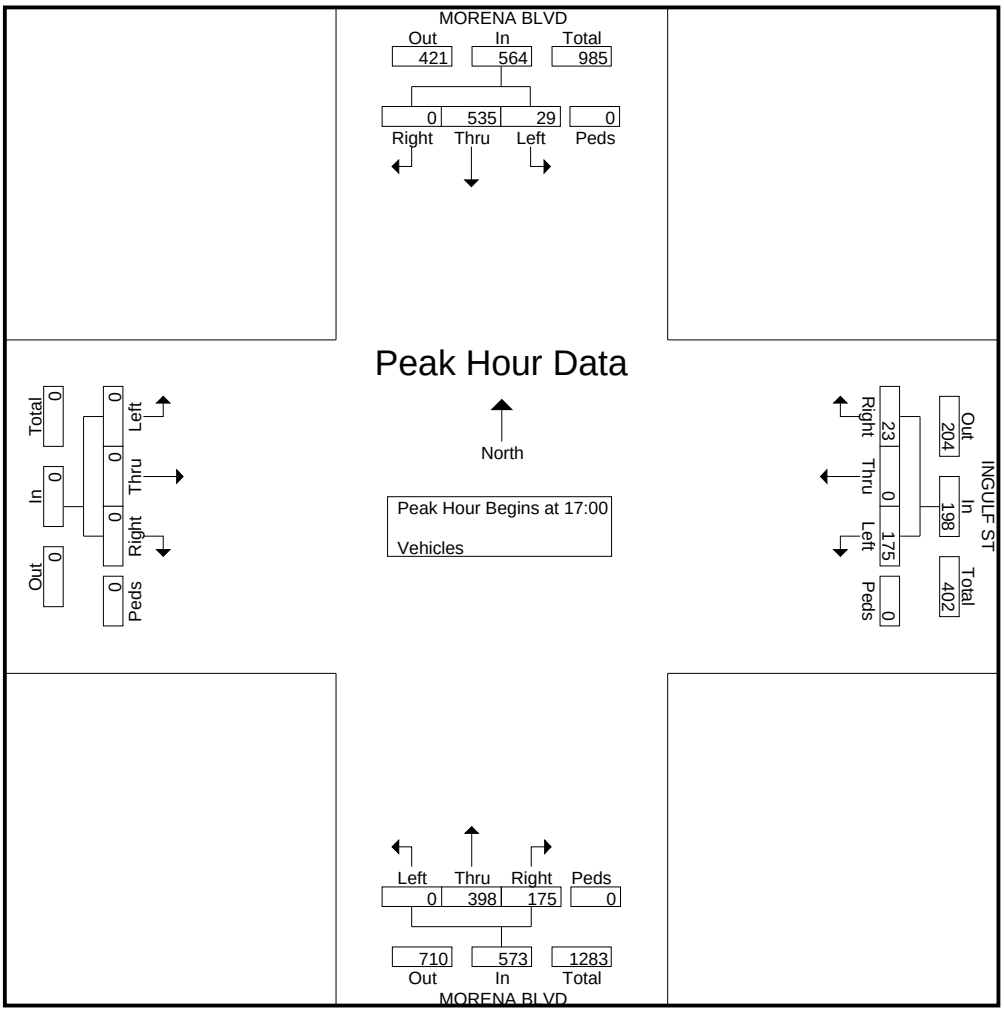

True Count

6520 Lemarand Ave
San Diego, CA 92115

File Name : 04.CLAIREMONT DR.DENVER ST
Site Code : 00000000
Start Date : 2/12/2013
Page No : 1

Groups Printed- Vehicles

	DENVER ST Southbound				CLAIREMONT DR Westbound				DENVER ST Northbound				CLAIREMONT DR Eastbound				
Start Time	Left	Thru	Right	Peds	Left	Thru	Right	Peds	Left	Thru	Right	Peds	Left	Thru	Right	Peds	Int. Total
07:00	2	5	43	0	8	206	4	0	63	3	15	0	13	77	23	0	462
07:15	9	4	70	0	15	252	2	0	83	5	15	0	9	68	31	0	563
07:30	11	4	66	0	10	269	4	0	70	2	22	0	17	74	29	0	578
07:45	4	3	63	0	26	207	12	0	68	5	20	0	39	92	44	0	583
Total	26	16	242	0	59	934	22	0	284	15	72	0	78	311	127	0	2186
08:00	5	3	62	0	16	201	4	0	70	3	20	0	30	107	33	0	554
08:15	10	2	61	0	25	222	4	0	78	5	28	0	19	89	27	0	570
08:30	13	2	42	0	20	219	6	0	50	9	28	0	21	121	32	0	563
08:45	14	8	34	0	33	206	11	0	63	1	26	0	26	131	36	0	589
Total	42	15	199	0	94	848	25	0	261	18	102	0	96	448	128	0	2276
*** BREAK ***																	
16:00	19	3	32	0	24	195	10	0	75	3	40	0	35	220	56	0	712
16:15	12	4	30	0	30	153	12	0	37	3	33	0	45	200	65	0	624
16:30	17	6	35	0	21	158	11	0	76	6	39	0	42	211	78	0	700
16:45	16	4	41	0	30	163	13	0	51	4	31	0	56	234	59	0	702
Total	64	17	138	0	105	669	46	0	239	16	143	0	178	865	258	0	2738
17:00	21	2	37	0	29	140	9	0	49	2	36	0	39	263	65	0	692
17:15	23	2	35	0	32	177	11	0	54	3	46	0	36	255	80	0	754
17:30	23	6	31	0	26	163	14	0	55	5	39	0	55	232	78	0	727
17:45	19	1	31	0	20	169	11	0	46	4	30	0	39	239	74	0	683
Total	86	11	134	0	107	649	45	0	204	14	151	0	169	989	297	0	2856
Grand Total	218	59	713	0	365	3100	138	0	988	63	468	0	521	2613	810	0	10056
Apprch %	22	6	72	0	10.1	86	3.8	0	65	4.1	30.8	0	13.2	66.3	20.5	0	
Total %	2.2	0.6	7.1	0	3.6	30.8	1.4	0	9.8	0.6	4.7	0	5.2	26	8.1	0	

True Count

6520 Lemarand Ave
San Diego, CA 92115

File Name : 04.CLAIREMONT DR.DENVER ST
Site Code : 00000000
Start Date : 2/12/2013
Page No : 2

	DENVER ST Southbound					CLAIREMONT DR Westbound					DENVER ST Northbound					CLAIREMONT DR Eastbound					
Start Time	**Left**	**Thru**	**Right**	**Peds**	**App. Total**	**Left**	**Thru**	**Right**	**Peds**	**App. Total**	**Left**	**Thru**	**Right**	**Peds**	**App. Total**	**Left**	**Thru**	**Right**	**Peds**	**App. Total**	**Int. Total**
Peak Hour Analysis From 07:00 to 11:45 - Peak 1 of 1																					
Peak Hour for Entire Intersection Begins at 07:30																					
07:30	11	4	66	0	81	10	269	4	0	283	70	2	22	0	94	17	74	29	0	120	578
07:45	4	3	63	0	70	26	207	12	0	245	68	5	20	0	93	39	92	44	0	175	583
08:00	5	3	62	0	70	16	201	4	0	221	70	3	20	0	93	30	107	33	0	170	554
08:15	10	2	61	0	73	25	222	4	0	251	78	5	28	0	111	19	89	27	0	135	570
Total Volume	30	12	252	0	294	77	899	24	0	1000	286	15	90	0	391	105	362	133	0	600	2285
% App. Total	10.2	4.1	85.7	0		7.7	89.9	2.4	0		73.1	3.8	23	0		17.5	60.3	22.2	0		
PHF	.682	.750	.955	.000	.907	.740	.836	.500	.000	.883	.917	.750	.804	.000	.881	.673	.846	.756	.000	.857	.980

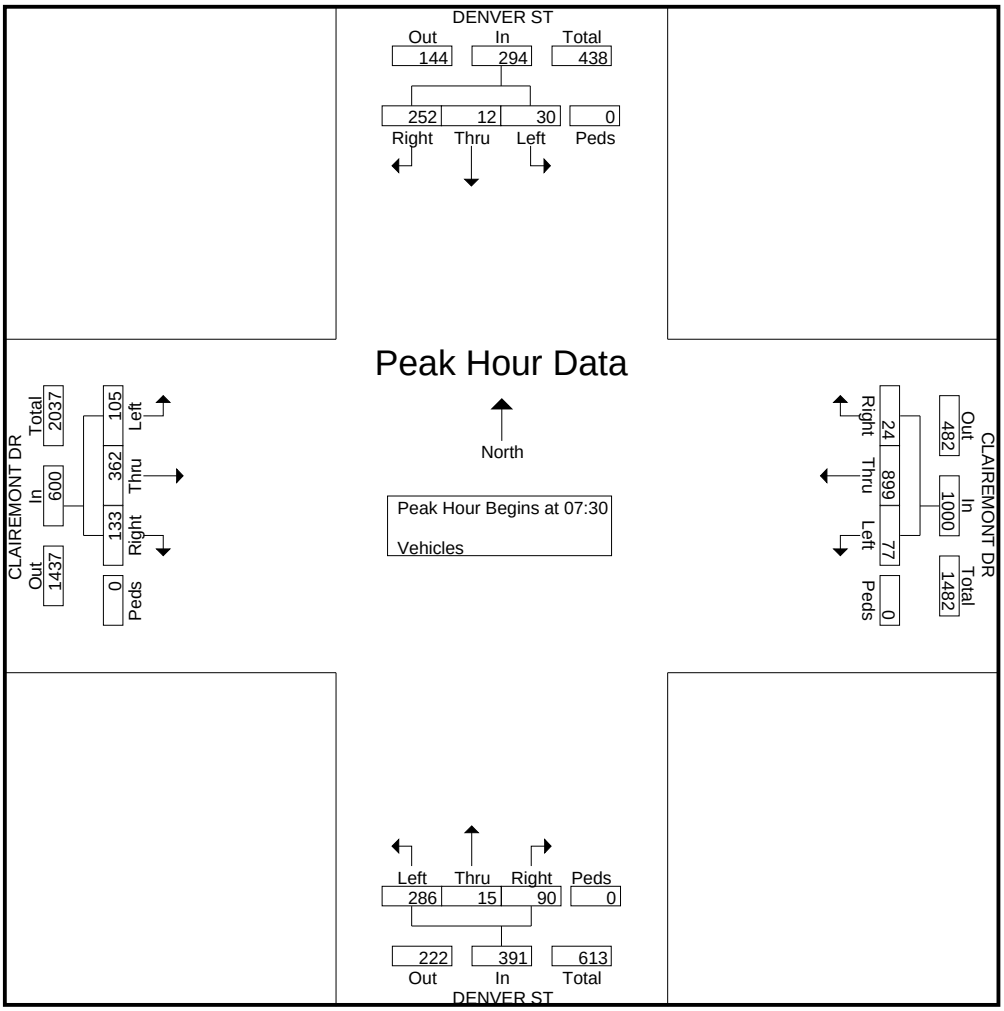

True Count

6520 Lemarand Ave
San Diego, CA 92115

File Name : 04.CLAIREMONT DR.DENVER ST
Site Code : 00000000
Start Date : 2/12/2013
Page No : 3

	DENVER ST Southbound					CLAIREMONT DR Westbound					DENVER ST Northbound					CLAIREMONT DR Eastbound					
Start Time	**Left**	**Thru**	**Right**	**Peds**	**App. Total**	**Left**	**Thru**	**Right**	**Peds**	**App. Total**	**Left**	**Thru**	**Right**	**Peds**	**App. Total**	**Left**	**Thru**	**Right**	**Peds**	**App. Total**	**Int. Total**
Peak Hour Analysis From 12:00 to 17:45 - Peak 1 of 1																					
Peak Hour for Entire Intersection Begins at 16:45																					
16:45	16	4	41	0	61	30	163	13	0	206	51	4	31	0	86	56	234	59	0	349	702
17:00	21	2	37	0	60	29	140	9	0	178	49	2	36	0	87	39	263	65	0	367	692
17:15	23	2	35	0	60	32	177	11	0	220	54	3	46	0	103	36	255	80	0	371	754
17:30	23	6	31	0	60	26	163	14	0	203	55	5	39	0	99	55	232	78	0	365	727
Total Volume	83	14	144	0	241	117	643	47	0	807	209	14	152	0	375	186	984	282	0	1452	2875
% App. Total	34.4	5.8	59.8	0		14.5	79.7	5.8	0		55.7	3.7	40.5	0		12.8	67.8	19.4	0		
PHF	.902	.583	.878	.000	.988	.914	.908	.839	.000	.917	.950	.700	.826	.000	.910	.830	.935	.881	.000	.978	.953

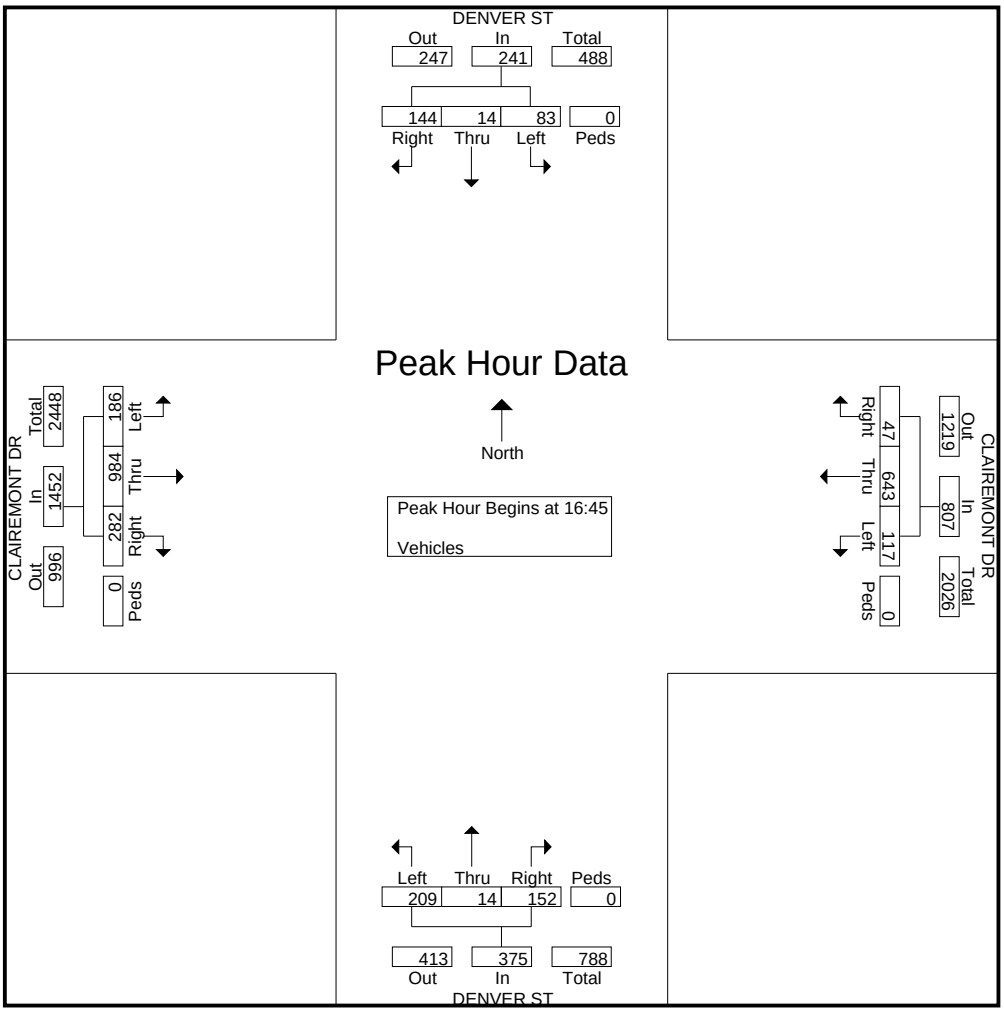

True Count

6520 Lemarand Ave
San Diego, CA 92115

File Name : 05.MORENA BLVD.JELLET ST
Site Code : 00000000
Start Date : 2/12/2013
Page No : 1

Groups Printed- Vehicles

	MORENA BLVD Southbound				JELLET ST Westbound				MORENA BLVD Northbound				Eastbound				
Start Time	Left	Thru	Right	Peds	Left	Thru	Right	Peds	Left	Thru	Right	Peds	Left	Thru	Right	Peds	Int. Total
07:00	4	60	0	0	0	0	5	0	0	100	4	0	0	0	0	0	173
07:15	5	83	0	0	3	0	3	0	0	91	3	0	0	0	0	0	188
07:30	4	84	0	0	6	0	2	0	0	120	5	0	0	0	0	0	221
07:45	7	129	0	0	4	0	2	0	0	174	6	0	0	0	0	0	322
Total	20	356	0	0	13	0	12	0	0	485	18	0	0	0	0	0	904
08:00	4	77	0	0	1	0	3	0	0	191	10	0	0	0	0	0	286
08:15	3	103	0	0	3	0	5	0	0	189	9	0	0	0	0	0	312
08:30	5	94	0	0	4	0	5	0	0	153	9	0	0	0	0	0	270
08:45	13	90	0	0	3	0	3	0	0	149	12	0	0	0	0	0	270
Total	25	364	0	0	11	0	16	0	0	682	40	0	0	0	0	0	1138
*** BREAK ***																	
16:00	2	138	0	0	3	0	5	0	0	152	4	0	0	0	0	0	304
16:15	11	127	0	0	3	0	8	0	0	129	10	0	0	0	0	0	288
16:30	11	123	0	0	9	0	7	0	0	131	7	0	0	0	0	0	288
16:45	13	143	0	0	5	0	7	0	0	140	6	0	0	0	0	0	314
Total	37	531	0	0	20	0	27	0	0	552	27	0	0	0	0	0	1194
17:00	8	175	0	0	5	0	8	0	0	171	9	0	0	0	0	0	376
17:15	7	149	0	0	8	0	5	0	0	133	8	0	0	0	0	0	310
17:30	16	153	0	0	2	0	6	0	0	133	8	0	0	0	0	0	318
17:45	7	161	0	0	7	0	5	0	0	103	7	0	0	0	0	0	290
Total	38	638	0	0	22	0	24	0	0	540	32	0	0	0	0	0	1294
Grand Total	120	1889	0	0	66	0	79	0	0	2259	117	0	0	0	0	0	4530
Apprch %	6	94	0	0	45.5	0	54.5	0	0	95.1	4.9	0	0	0	0	0	
Total %	2.6	41.7	0	0	1.5	0	1.7	0	0	49.9	2.6	0	0	0	0	0	

True Count

6520 Lemarand Ave
San Diego, CA 92115

File Name : 05.MORENA BLVD.JELLET ST
Site Code : 00000000
Start Date : 2/12/2013
Page No : 2

	MORENA BLVD Southbound					JELLET ST Westbound					MORENA BLVD Northbound					Eastbound					
Start Time	**Left**	**Thru**	**Right**	**Peds**	**App. Total**	**Left**	**Thru**	**Right**	**Peds**	**App. Total**	**Left**	**Thru**	**Right**	**Peds**	**App. Total**	**Left**	**Thru**	**Right**	**Peds**	**App. Total**	**Int. Total**
Peak Hour Analysis From 07:00 to 11:45 - Peak 1 of 1																					
Peak Hour for Entire Intersection Begins at 07:45																					
07:45	7	129	0	0	136	4	0	2	0	6	0	174	6	0	180	0	0	0	0	0	322
08:00	4	77	0	0	81	1	0	3	0	4	0	191	10	0	201	0	0	0	0	0	286
08:15	3	103	0	0	106	3	0	5	0	8	0	189	9	0	198	0	0	0	0	0	312
08:30	5	94	0	0	99	4	0	5	0	9	0	153	9	0	162	0	0	0	0	0	270
Total Volume	19	403	0	0	422	12	0	15	0	27	0	707	34	0	741	0	0	0	0	0	1190
% App. Total	4.5	95.5	0	0		44.4	0	55.6	0		0	95.4	4.6	0		0	0	0	0		
PHF	.679	.781	.000	.000	.776	.750	.000	.750	.000	.750	.000	.925	.850	.000	.922	.000	.000	.000	.000	.000	.924

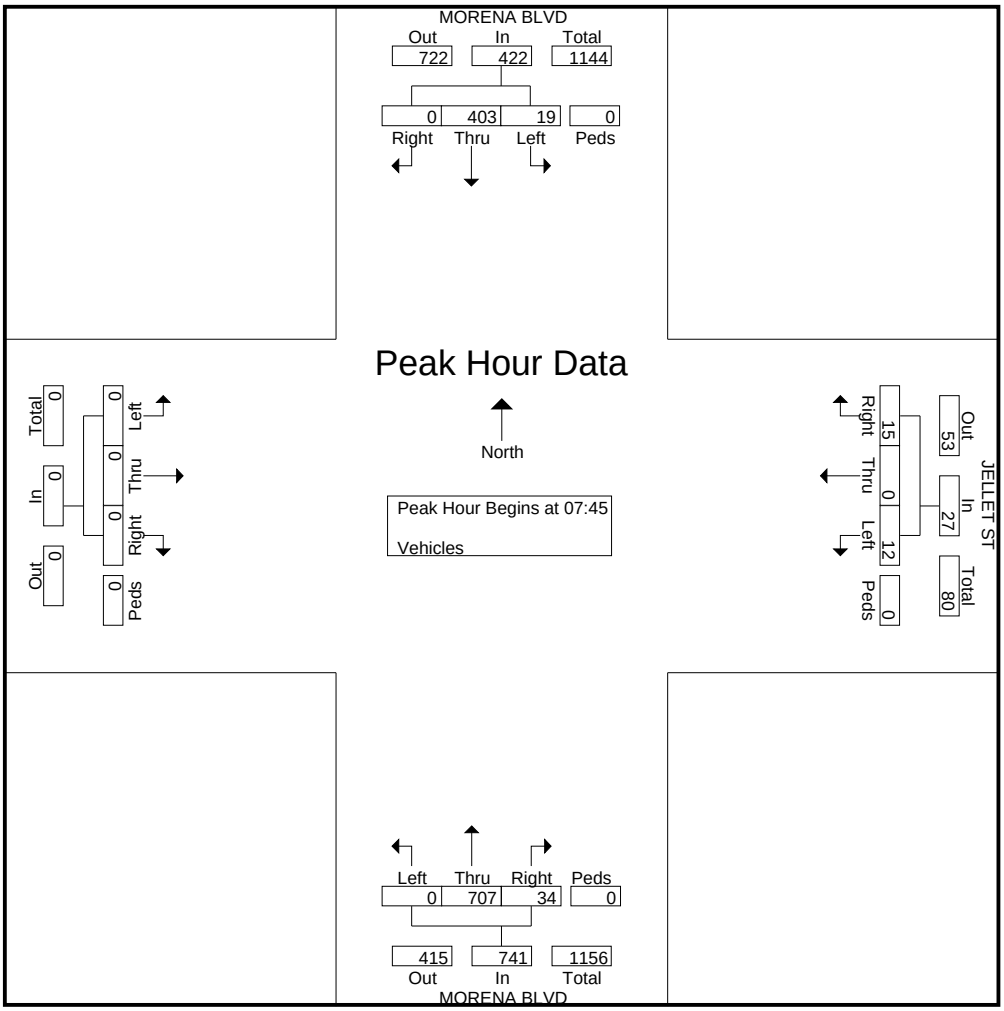

True Count

6520 Lemarand Ave
San Diego, CA 92115

File Name : 05.MORENA BLVD.JELLET ST
Site Code : 00000000
Start Date : 2/12/2013
Page No : 3

	MORENA BLVD Southbound					JELLET ST Westbound					MORENA BLVD Northbound					Eastbound					
Start Time	**Left**	**Thru**	**Right**	**Peds**	**App. Total**	**Left**	**Thru**	**Right**	**Peds**	**App. Total**	**Left**	**Thru**	**Right**	**Peds**	**App. Total**	**Left**	**Thru**	**Right**	**Peds**	**App. Total**	**Int. Total**
Peak Hour Analysis From 12:00 to 17:45 - Peak 1 of 1																					
Peak Hour for Entire Intersection Begins at 16:45																					
16:45	13	143	0	0	156	5	0	7	0	12	0	140	6	0	146	0	0	0	0	0	314
17:00	8	175	0	0	183	5	0	8	0	13	0	171	9	0	180	0	0	0	0	0	376
17:15	7	149	0	0	156	8	0	5	0	13	0	133	8	0	141	0	0	0	0	0	310
17:30	16	153	0	0	169	2	0	6	0	8	0	133	8	0	141	0	0	0	0	0	318
Total Volume	44	620	0	0	664	20	0	26	0	46	0	577	31	0	608	0	0	0	0	0	1318
% App. Total	6.6	93.4	0	0		43.5	0	56.5	0		0	94.9	5.1	0		0	0	0	0		
PHF	.688	.886	.000	.000	.907	.625	.000	.813	.000	.885	.000	.844	.861	.000	.844	.000	.000	.000	.000	.000	.876

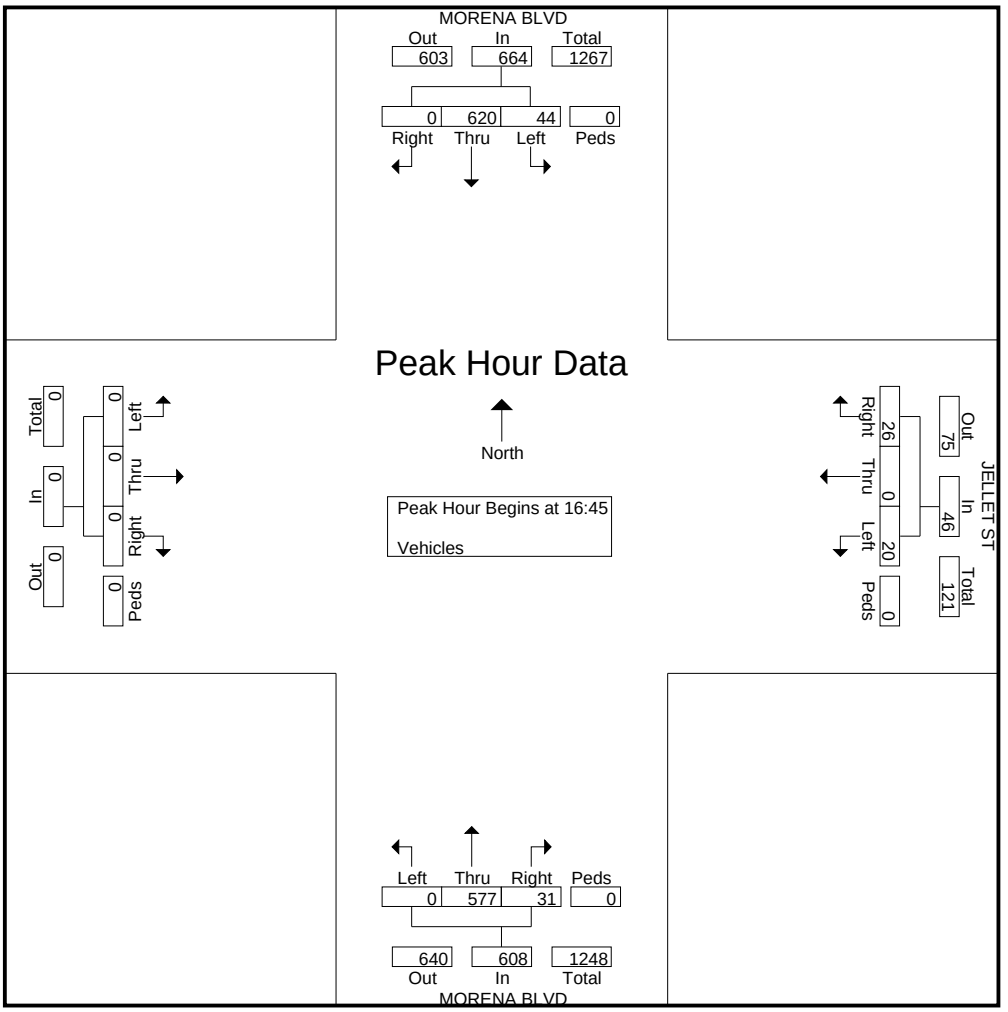

True Count

6520 Lemarand Ave
San Diego, CA 92115

File Name : 06.DENVER ST.INGULF ST
Site Code : 00000000
Start Date : 2/6/2013
Page No : 1

Groups Printed- Vehicles

	DENVER ST Southbound				INGULF ST Westbound				DENVER ST Northbound				INGULF ST Eastbound				
Start Time	Left	Thru	Right	Peds	Left	Thru	Right	Peds	Left	Thru	Right	Peds	Left	Thru	Right	Peds	Int. Total
07:00	0	16	18	0	1	3	14	0	0	33	0	0	23	5	0	0	113
07:15	1	19	14	0	0	1	10	0	0	34	0	0	40	2	1	0	122
07:30	0	19	27	0	1	4	14	0	0	38	0	0	40	4	2	0	149
07:45	4	37	28	0	0	3	17	0	0	38	0	0	38	4	1	0	170
Total	5	91	87	0	2	11	55	0	0	143	0	0	141	15	4	0	554
08:00	4	21	30	0	0	6	19	0	0	54	2	0	43	5	1	0	185
08:15	3	22	28	0	0	5	16	0	0	32	0	0	48	4	1	0	159
08:30	2	33	20	0	0	7	20	0	0	33	0	0	43	4	3	0	165
08:45	3	42	28	0	3	5	15	0	0	49	1	0	47	4	1	0	198
Total	12	118	106	0	3	23	70	0	0	168	3	0	181	17	6	0	707
*** BREAK ***																	
16:00	4	34	47	0	0	1	5	0	1	30	0	0	52	4	0	0	178
16:15	13	39	42	0	0	2	4	0	0	15	0	0	50	1	1	0	167
16:30	3	27	58	0	0	0	10	0	0	32	0	0	64	4	0	0	198
16:45	6	39	59	0	1	2	10	0	2	26	0	0	49	3	1	0	198
Total	26	139	206	0	1	5	29	0	3	103	0	0	215	12	2	0	741
17:00	12	37	70	0	0	8	12	0	1	34	2	0	53	10	4	0	243
17:15	11	48	54	0	0	5	7	0	1	15	1	0	52	5	0	0	199
17:30	8	41	50	0	1	4	8	0	0	30	0	0	48	5	1	0	196
17:45	9	47	46	0	0	2	5	0	0	25	0	0	50	2	1	0	187
Total	40	173	220	0	1	19	32	0	2	104	3	0	203	22	6	0	825
Grand Total	83	521	619	0	7	58	186	0	5	518	6	0	740	66	18	0	2827
Apprch %	6.8	42.6	50.6	0	2.8	23.1	74.1	0	0.9	97.9	1.1	0	89.8	8	2.2	0	
Total %	2.9	18.4	21.9	0	0.2	2.1	6.6	0	0.2	18.3	0.2	0	26.2	2.3	0.6	0	

True Count

6520 Lemarand Ave
San Diego, CA 92115

File Name : 06.DENVER ST.INGULF ST
Site Code : 00000000
Start Date : 2/6/2013
Page No : 2

	DENVER ST Southbound					INGULF ST Westbound					DENVER ST Northbound					INGULF ST Eastbound					
Start Time	**Left**	**Thru**	**Right**	**Peds**	**App. Total**	**Left**	**Thru**	**Right**	**Peds**	**App. Total**	**Left**	**Thru**	**Right**	**Peds**	**App. Total**	**Left**	**Thru**	**Right**	**Peds**	**App. Total**	**Int. Total**
Peak Hour Analysis From 07:00 to 11:45 - Peak 1 of 1																					
Peak Hour for Entire Intersection Begins at 08:00																					
08:00	4	21	30	0	55	0	6	19	0	25	0	54	2	0	56	43	5	1	0	49	185
08:15	3	22	28	0	53	0	5	16	0	21	0	32	0	0	32	48	4	1	0	53	159
08:30	2	33	20	0	55	0	7	20	0	27	0	33	0	0	33	43	4	3	0	50	165
08:45	3	42	28	0	73	3	5	15	0	23	0	49	1	0	50	47	4	1	0	52	198
Total Volume	12	118	106	0	236	3	23	70	0	96	0	168	3	0	171	181	17	6	0	204	707
% App. Total	5.1	50	44.9	0		3.1	24	72.9	0		0	98.2	1.8	0		88.7	8.3	2.9	0		
PHF	.750	.702	.883	.000	.808	.250	.821	.875	.000	.889	.000	.778	.375	.000	.763	.943	.850	.500	.000	.962	.893

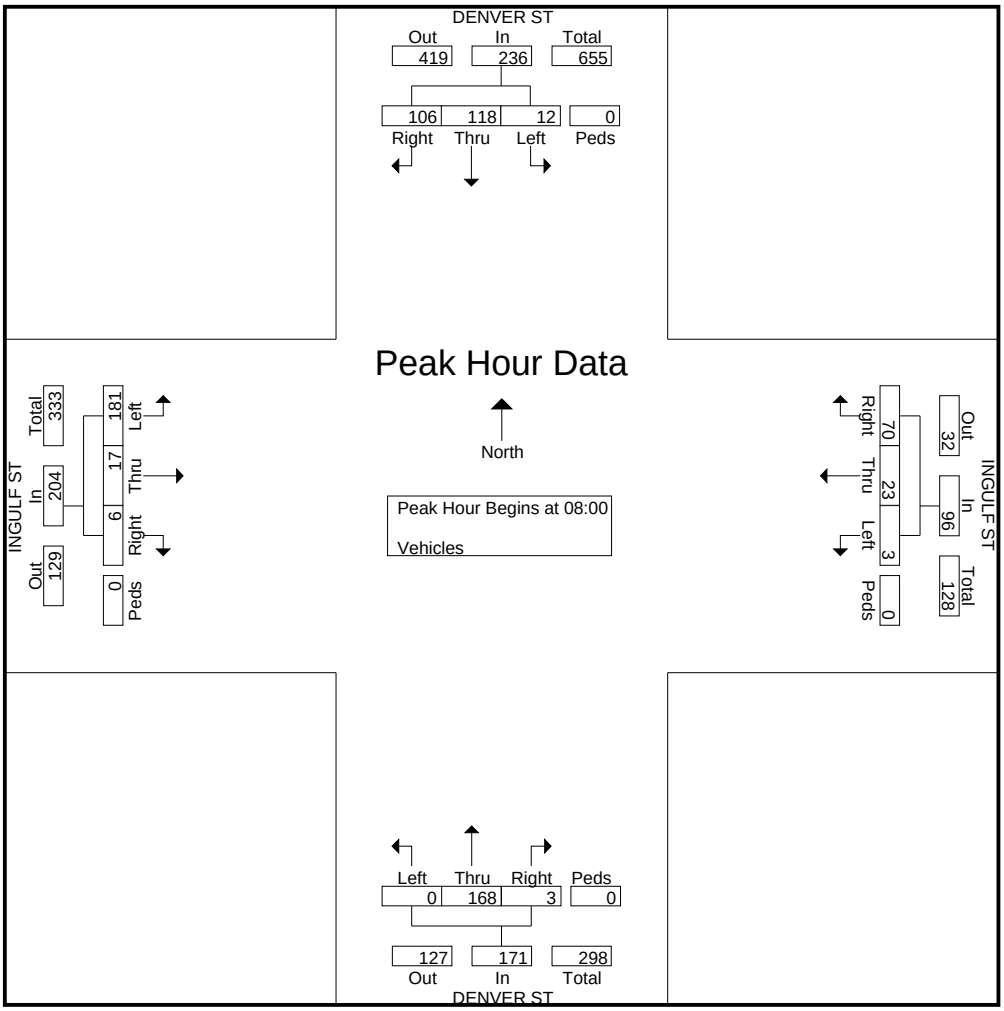

True Count

6520 Lemarand Ave
San Diego, CA 92115

File Name : 06.DENVER ST.INGULF ST
Site Code : 00000000
Start Date : 2/6/2013
Page No : 3

	DENVER ST Southbound					INGULF ST Westbound					DENVER ST Northbound					INGULF ST Eastbound					
Start Time	**Left**	**Thru**	**Right**	**Peds**	**App. Total**	**Left**	**Thru**	**Right**	**Peds**	**App. Total**	**Left**	**Thru**	**Right**	**Peds**	**App. Total**	**Left**	**Thru**	**Right**	**Peds**	**App. Total**	**Int. Total**
Peak Hour Analysis From 12:00 to 17:45 - Peak 1 of 1																					
Peak Hour for Entire Intersection Begins at 16:30																					
16:30	3	27	58	0	88	0	0	10	0	10	0	32	0	0	32	64	4	0	0	68	198
16:45	6	39	59	0	104	1	2	10	0	13	2	26	0	0	28	49	3	1	0	53	198
17:00	12	37	70	0	119	0	8	12	0	20	1	34	2	0	37	53	10	4	0	67	243
17:15	11	48	54	0	113	0	5	7	0	12	1	15	1	0	17	52	5	0	0	57	199
Total Volume	32	151	241	0	424	1	15	39	0	55	4	107	3	0	114	218	22	5	0	245	838
% App. Total	7.5	35.6	56.8	0		1.8	27.3	70.9	0		3.5	93.9	2.6	0		89	9	2	0		
PHF	.667	.786	.861	.000	.891	.250	.469	.813	.000	.688	.500	.787	.375	.000	.770	.852	.550	.313	.000	.901	.862

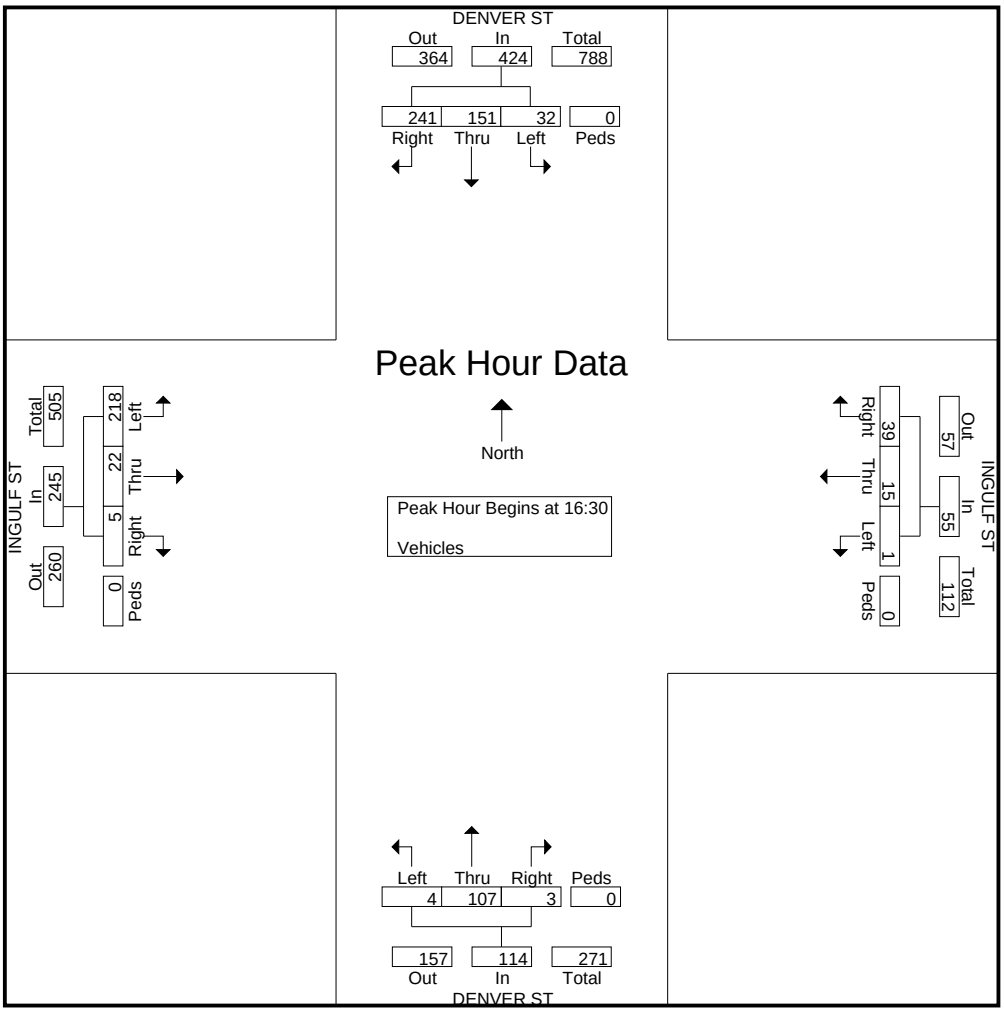

True Count

6520 Lemarand Ave
San Diego, CA 92115

File Name : 07.MORENA BLVD.MILTON ST
Site Code : 00000000
Start Date : 2/6/2013
Page No : 1

Groups Printed- Vehicles

	MORENA BLVD Southbound				MILTON ST Westbound				MORENA BLVD Northbound				Eastbound				
Start Time	Left	Thru	Right	Peds	Left	Thru	Right	Peds	Left	Thru	Right	Peds	Left	Thru	Right	Peds	Int. Total
07:00	5	49	0	0	22	0	5	0	0	88	11	0	0	0	0	0	180
07:15	8	60	0	0	25	0	7	0	0	92	16	0	0	0	0	0	208
07:30	13	88	0	0	16	0	6	0	0	123	15	0	0	0	0	0	261
07:45	30	96	0	0	23	0	14	0	0	149	24	0	0	0	0	0	336
Total	56	293	0	0	86	0	32	0	0	452	66	0	0	0	0	0	985
08:00	11	69	0	0	24	0	23	0	0	196	17	0	0	0	0	0	340
08:15	7	96	0	0	21	0	19	0	0	140	28	0	0	0	0	0	311
08:30	11	78	0	0	20	0	15	0	0	144	34	0	0	0	0	0	302
08:45	14	94	0	0	38	0	17	0	0	125	39	0	0	0	0	0	327
Total	43	337	0	0	103	0	74	0	0	605	118	0	0	0	0	0	1280
*** BREAK ***																	
16:00	6	114	0	0	16	0	5	0	0	138	9	0	0	0	0	0	288
16:15	7	99	0	0	26	0	9	0	0	130	18	0	0	0	0	0	289
16:30	7	121	0	0	18	0	14	0	0	130	22	0	0	0	0	0	312
16:45	9	147	0	0	28	0	17	0	0	134	19	0	0	0	0	0	354
Total	29	481	0	0	88	0	45	0	0	532	68	0	0	0	0	0	1243
17:00	9	152	0	0	19	0	18	0	0	132	17	0	0	0	0	0	347
17:15	10	167	0	0	19	0	9	0	0	142	17	0	0	0	0	0	364
17:30	9	174	0	0	22	0	10	0	0	136	20	0	0	0	0	0	371
17:45	4	163	0	0	20	0	8	0	0	134	11	0	0	0	0	0	340
Total	32	656	0	0	80	0	45	0	0	544	65	0	0	0	0	0	1422
Grand Total	160	1767	0	0	357	0	196	0	0	2133	317	0	0	0	0	0	4930
Apprch %	8.3	91.7	0	0	64.6	0	35.4	0	0	87.1	12.9	0	0	0	0	0	
Total %	3.2	35.8	0	0	7.2	0	4	0	0	43.3	6.4	0	0	0	0	0	

True Count

6520 Lemarand Ave
San Diego, CA 92115

File Name : 07.MORENA BLVD.MILTON ST
Site Code : 00000000
Start Date : 2/6/2013
Page No : 2

	MORENA BLVD Southbound					MILTON ST Westbound					MORENA BLVD Northbound					Eastbound					
Start Time	**Left**	**Thru**	**Right**	**Peds**	**App. Total**	**Left**	**Thru**	**Right**	**Peds**	**App. Total**	**Left**	**Thru**	**Right**	**Peds**	**App. Total**	**Left**	**Thru**	**Right**	**Peds**	**App. Total**	**Int. Total**
Peak Hour Analysis From 07:00 to 11:45 - Peak 1 of 1																					
Peak Hour for Entire Intersection Begins at 07:45																					
07:45	30	96	0	0	126	23	0	14	0	37	0	149	24	0	173	0	0	0	0	0	336
08:00	11	69	0	0	80	24	0	23	0	47	0	196	17	0	213	0	0	0	0	0	340
08:15	7	96	0	0	103	21	0	19	0	40	0	140	28	0	168	0	0	0	0	0	311
08:30	11	78	0	0	89	20	0	15	0	35	0	144	34	0	178	0	0	0	0	0	302
Total Volume	59	339	0	0	398	88	0	71	0	159	0	629	103	0	732	0	0	0	0	0	1289
% App. Total	14.8	85.2	0	0		55.3	0	44.7	0		0	85.9	14.1	0		0	0	0	0		
PHF	.492	.883	.000	.000	.790	.917	.000	.772	.000	.846	.000	.802	.757	.000	.859	.000	.000	.000	.000	.000	.948

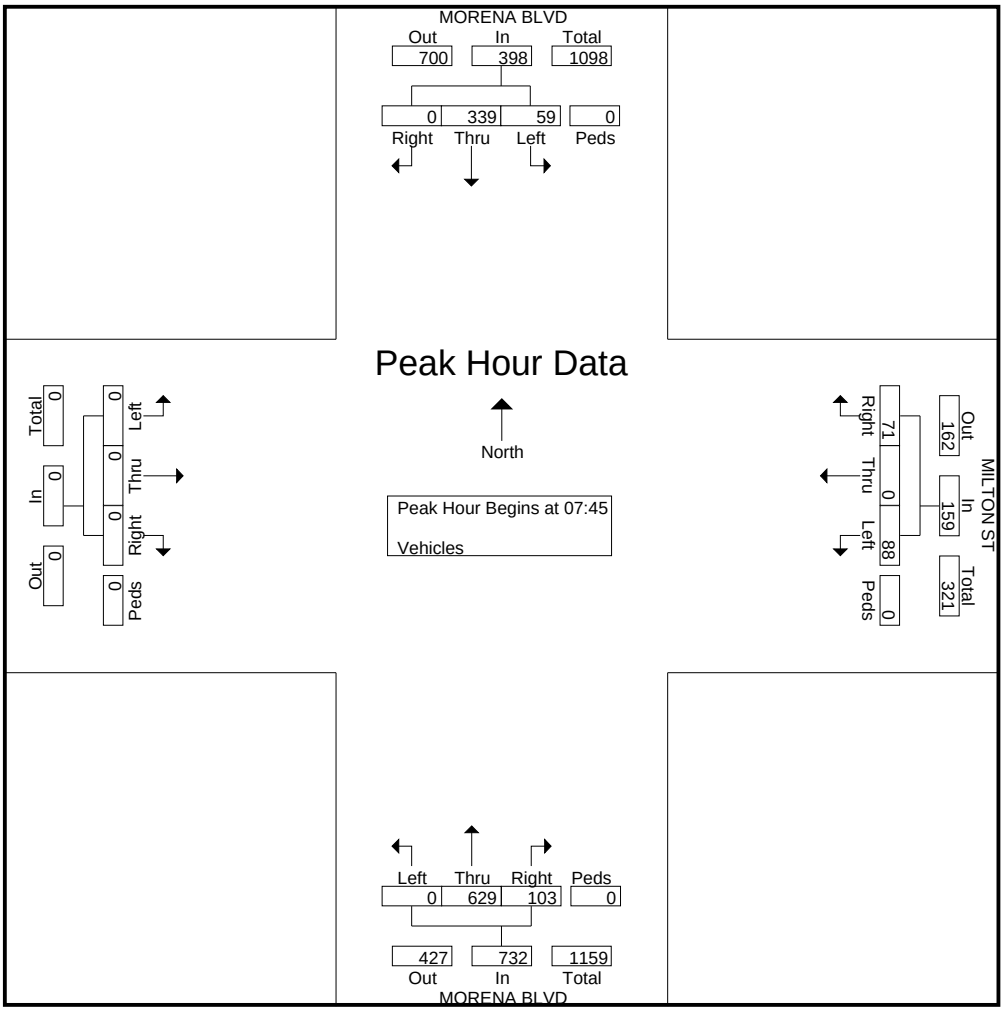

True Count

6520 Lemarand Ave
San Diego, CA 92115

File Name : 07.MORENA BLVD.MILTON ST
Site Code : 00000000
Start Date : 2/6/2013
Page No : 3

	MORENA BLVD Southbound					MILTON ST Westbound					MORENA BLVD Northbound					Eastbound					
Start Time	**Left**	**Thru**	**Right**	**Peds**	**App. Total**	**Left**	**Thru**	**Right**	**Peds**	**App. Total**	**Left**	**Thru**	**Right**	**Peds**	**App. Total**	**Left**	**Thru**	**Right**	**Peds**	**App. Total**	**Int. Total**
Peak Hour Analysis From 12:00 to 17:45 - Peak 1 of 1																					
Peak Hour for Entire Intersection Begins at 16:45																					
16:45	9	147	0	0	156	28	0	17	0	45	0	134	19	0	153	0	0	0	0	0	354
17:00	9	152	0	0	161	19	0	18	0	37	0	132	17	0	149	0	0	0	0	0	347
17:15	10	167	0	0	177	19	0	9	0	28	0	142	17	0	159	0	0	0	0	0	364
17:30	9	174	0	0	183	22	0	10	0	32	0	136	20	0	156	0	0	0	0	0	371
Total Volume	37	640	0	0	677	88	0	54	0	142	0	544	73	0	617	0	0	0	0	0	1436
% App. Total	5.5	94.5	0	0		62	0	38	0		0	88.2	11.8	0		0	0	0	0		
PHF	.925	.920	.000	.000	.925	.786	.000	.750	.000	.789	.000	.958	.913	.000	.970	.000	.000	.000	.000	.000	.968

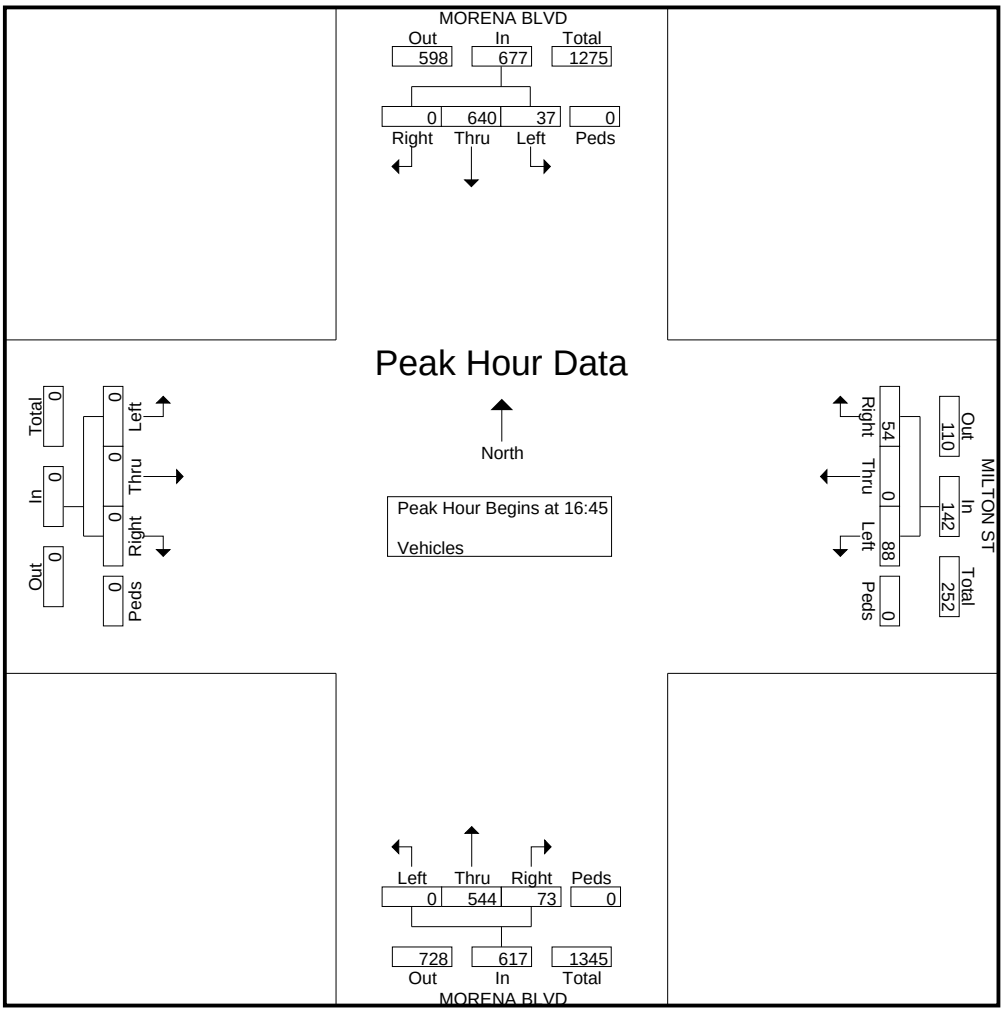

True Count

6520 Lemarand Ave
San Diego, CA 92115

File Name : 08.MORENA BLVD.ASHTON ST
Site Code : 00000000
Start Date : 2/6/2013
Page No : 1

Groups Printed- Vehicles

	MORENA BLVD Southbound				ASHTON ST Westbound				MORENA BLVD Northbound				Eastbound				
Start Time	Left	Thru	Right	Peds	Left	Thru	Right	Peds	Left	Thru	Right	Peds	Left	Thru	Right	Peds	Int. Total
07:00	2	70	0	0	4	0	6	0	0	85	6	0	0	0	0	0	173
07:15	1	78	0	0	9	0	4	0	0	104	1	0	0	0	0	0	197
07:30	1	113	0	0	4	0	2	0	0	136	3	0	0	0	0	0	259
07:45	2	115	0	0	7	0	7	0	0	160	4	0	0	0	0	0	295
Total	6	376	0	0	24	0	19	0	0	485	14	0	0	0	0	0	924
08:00	0	94	0	0	10	0	6	0	0	214	12	0	0	0	0	0	336
08:15	1	113	0	0	8	0	7	0	0	164	3	0	0	0	0	0	296
08:30	1	92	0	0	8	0	5	0	0	175	5	0	0	0	0	0	286
08:45	4	130	0	0	6	0	7	0	0	136	9	0	0	0	0	0	292
Total	6	429	0	0	32	0	25	0	0	689	29	0	0	0	0	0	1210
*** BREAK ***																	
16:00	7	123	0	0	7	0	3	0	0	146	11	0	0	0	0	0	297
16:15	5	121	0	0	7	0	6	0	0	144	15	0	0	0	0	0	298
16:30	10	125	0	0	13	0	3	0	0	116	17	0	0	0	0	0	284
16:45	4	162	0	0	15	0	7	0	0	142	18	0	0	0	0	0	348
Total	26	531	0	0	42	0	19	0	0	548	61	0	0	0	0	0	1227
17:00	9	165	0	0	16	0	6	0	0	133	23	0	0	0	0	0	352
17:15	12	171	0	0	12	0	7	0	0	151	20	0	0	0	0	0	373
17:30	11	172	0	0	8	0	9	0	0	150	20	0	0	0	0	0	370
17:45	12	164	0	0	10	0	6	0	0	132	15	0	0	0	0	0	339
Total	44	672	0	0	46	0	28	0	0	566	78	0	0	0	0	0	1434
Grand Total	82	2008	0	0	144	0	91	0	0	2288	182	0	0	0	0	0	4795
Apprch %	3.9	96.1	0	0	61.3	0	38.7	0	0	92.6	7.4	0	0	0	0	0	
Total %	1.7	41.9	0	0	3	0	1.9	0	0	47.7	3.8	0	0	0	0	0	

True Count

6520 Lemarand Ave
San Diego, CA 92115

File Name : 08.MORENA BLVD.ASHTON ST
Site Code : 00000000
Start Date : 2/6/2013
Page No : 2

	MORENA BLVD Southbound					ASHTON ST Westbound					MORENA BLVD Northbound					Eastbound					
Start Time	**Left**	**Thru**	**Right**	**Peds**	**App. Total**	**Left**	**Thru**	**Right**	**Peds**	**App. Total**	**Left**	**Thru**	**Right**	**Peds**	**App. Total**	**Left**	**Thru**	**Right**	**Peds**	**App. Total**	**Int. Total**
Peak Hour Analysis From 07:00 to 11:45 - Peak 1 of 1																					
Peak Hour for Entire Intersection Begins at 07:45																					
07:45	2	115	0	0	117	7	0	7	0	14	0	160	4	0	164	0	0	0	0	0	295
08:00	0	94	0	0	94	10	0	6	0	16	0	214	12	0	226	0	0	0	0	0	336
08:15	1	113	0	0	114	8	0	7	0	15	0	164	3	0	167	0	0	0	0	0	296
08:30	1	92	0	0	93	8	0	5	0	13	0	175	5	0	180	0	0	0	0	0	286
Total Volume	4	414	0	0	418	33	0	25	0	58	0	713	24	0	737	0	0	0	0	0	1213
% App. Total	1	99	0	0		56.9	0	43.1	0		0	96.7	3.3	0		0	0	0	0		
PHF	.500	.900	.000	.000	.893	.825	.000	.893	.000	.906	.000	.833	.500	.000	.815	.000	.000	.000	.000	.000	.903

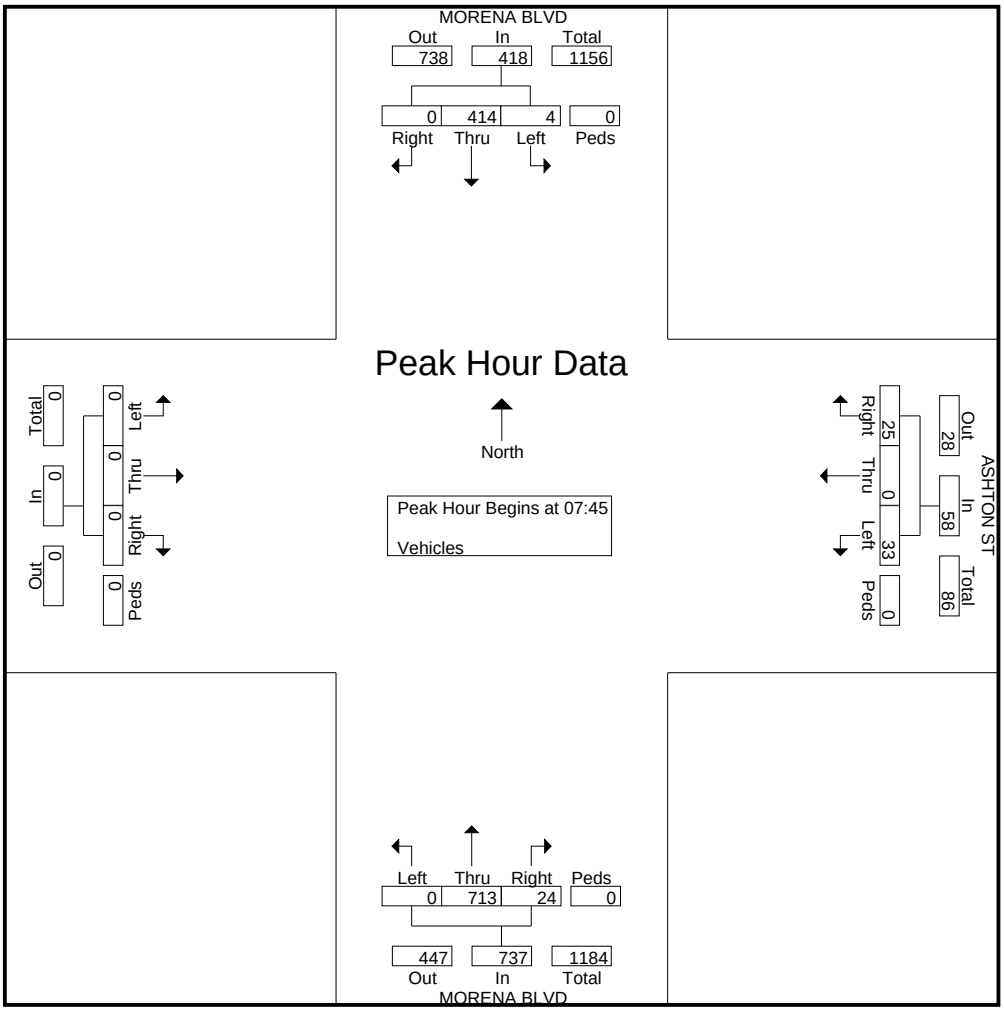

True Count

6520 Lemarand Ave
San Diego, CA 92115

File Name : 08.MORENA BLVD.ASHTON ST
Site Code : 00000000
Start Date : 2/6/2013
Page No : 3

	MORENA BLVD Southbound					ASHTON ST Westbound					MORENA BLVD Northbound					Eastbound					
Start Time	**Left**	**Thru**	**Right**	**Peds**	**App. Total**	**Left**	**Thru**	**Right**	**Peds**	**App. Total**	**Left**	**Thru**	**Right**	**Peds**	**App. Total**	**Left**	**Thru**	**Right**	**Peds**	**App. Total**	**Int. Total**
Peak Hour Analysis From 12:00 to 17:45 - Peak 1 of 1																					
Peak Hour for Entire Intersection Begins at 16:45																					
16:45	4	162	0	0	166	15	0	7	0	22	0	142	18	0	160	0	0	0	0	0	348
17:00	9	165	0	0	174	16	0	6	0	22	0	133	23	0	156	0	0	0	0	0	352
17:15	12	171	0	0	183	12	0	7	0	19	0	151	20	0	171	0	0	0	0	0	373
17:30	11	172	0	0	183	8	0	9	0	17	0	150	20	0	170	0	0	0	0	0	370
Total Volume	36	670	0	0	706	51	0	29	0	80	0	576	81	0	657	0	0	0	0	0	1443
% App. Total	5.1	94.9	0	0		63.8	0	36.2	0		0	87.7	12.3	0		0	0	0	0		
PHF	.750	.974	.000	.000	.964	.797	.000	.806	.000	.909	.000	.954	.880	.000	.961	.000	.000	.000	.000	.000	.967

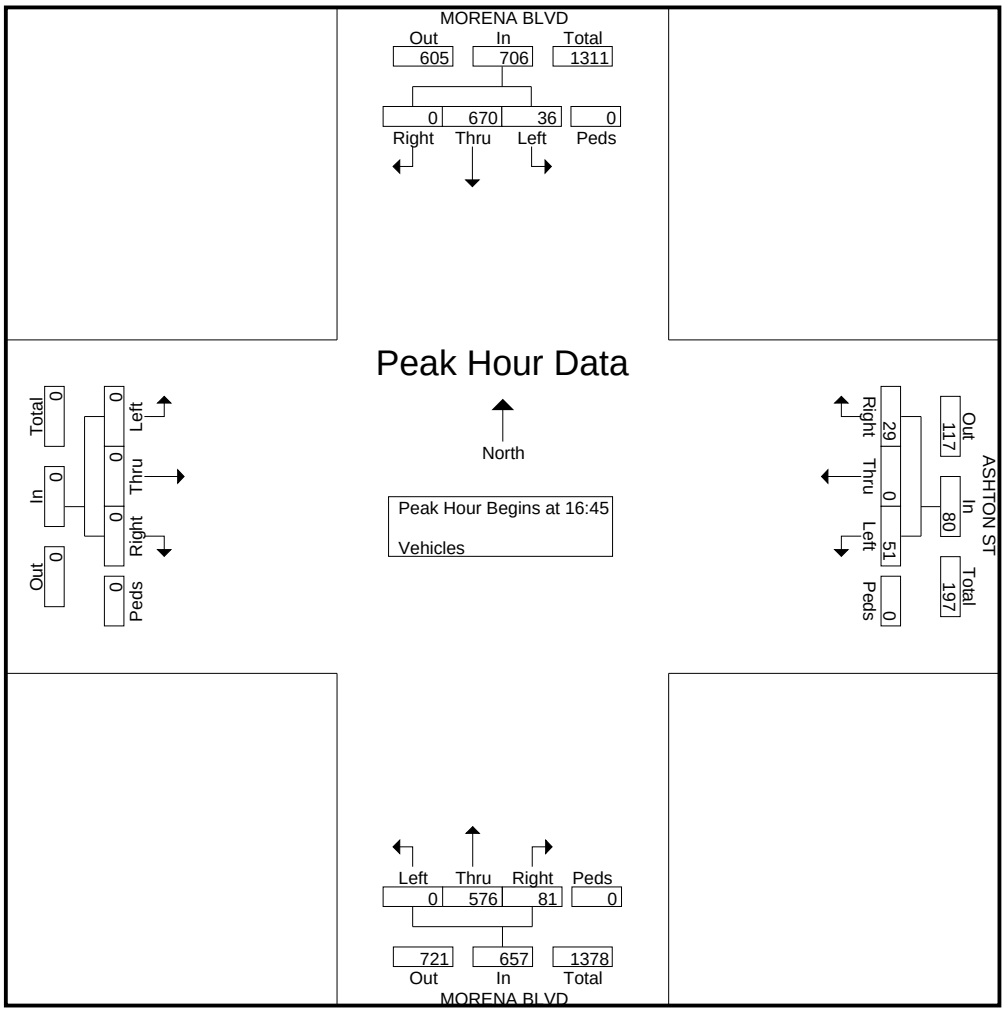

True Count

6520 Lemarand Ave
San Diego, CA 92115

File Name : 09.MORENA BLVD.WEST MORENA BLVD (NORTH)
Site Code : 00000000
Start Date : 2/6/2013
Page No : 1

Groups Printed- Vehicles

	MORENA BLVD Southbound				MORENA BLVD Westbound				WEST MORENA BLVD Northbound				Eastbound				
Start Time	Left	Thru	Right	Peds	Left	Thru	Right	Peds	Left	Thru	Right	Peds	Left	Thru	Right	Peds	Int. Total
07:00	15	58	0	0	3	0	30	0	0	47	2	0	0	0	0	0	155
07:15	21	69	0	0	2	0	29	0	0	74	4	0	0	0	0	0	199
07:30	38	96	0	0	1	0	43	0	0	95	4	0	0	0	0	0	277
07:45	20	90	0	0	1	0	47	0	0	119	5	0	0	0	0	0	282
Total	94	313	0	0	7	0	149	0	0	335	15	0	0	0	0	0	913
08:00	24	79	0	0	4	0	95	0	0	129	4	0	0	0	0	0	335
08:15	26	92	0	0	1	0	62	0	0	92	3	0	0	0	0	0	276
08:30	22	73	0	0	2	0	76	0	0	110	9	0	0	0	0	0	292
08:45	33	100	0	0	4	0	54	0	0	84	1	0	0	0	0	0	276
Total	105	344	0	0	11	0	287	0	0	415	17	0	0	0	0	0	1179
*** BREAK ***																	
16:00	42	91	0	0	5	0	66	0	0	81	7	0	0	0	0	0	292
16:15	34	95	0	0	2	0	78	0	0	96	7	0	0	0	0	0	312
16:30	38	98	0	0	2	0	54	0	0	75	3	0	0	0	0	0	270
16:45	53	118	0	0	6	0	77	0	0	104	3	0	0	0	0	0	361
Total	167	402	0	0	15	0	275	0	0	356	20	0	0	0	0	0	1235
17:00	49	127	0	0	5	0	68	0	0	87	15	0	0	0	0	0	351
17:15	42	134	0	0	2	0	89	0	0	89	4	0	0	0	0	0	360
17:30	47	122	0	0	2	0	79	0	0	107	4	0	0	0	0	0	361
17:45	42	126	0	0	1	0	65	0	0	77	6	0	0	0	0	0	317
Total	180	509	0	0	10	0	301	0	0	360	29	0	0	0	0	0	1389
Grand Total	546	1568	0	0	43	0	1012	0	0	1466	81	0	0	0	0	0	4716
Apprch %	25.8	74.2	0	0	4.1	0	95.9	0	0	94.8	5.2	0	0	0	0	0	
Total %	11.6	33.2	0	0	0.9	0	21.5	0	0	31.1	1.7	0	0	0	0	0	

True Count

6520 Lemarand Ave
San Diego, CA 92115

File Name : 09.MORENA BLVD.WEST MORENA BLVD (NORTH)
Site Code : 00000000
Start Date : 2/6/2013
Page No : 2

	MORENA BLVD Southbound					MORENA BLVD Westbound					WEST MORENA BLVD Northbound					Eastbound					
Start Time	**Left**	**Thru**	**Right**	**Peds**	**App. Total**	**Left**	**Thru**	**Right**	**Peds**	**App. Total**	**Left**	**Thru**	**Right**	**Peds**	**App. Total**	**Left**	**Thru**	**Right**	**Peds**	**App. Total**	**Int. Total**
Peak Hour Analysis From 07:00 to 11:45 - Peak 1 of 1																					
Peak Hour for Entire Intersection Begins at 07:45																					
07:45	20	90	0	0	110	1	0	47	0	48	0	119	5	0	124	0	0	0	0	0	282
08:00	24	79	0	0	103	4	0	95	0	99	0	129	4	0	133	0	0	0	0	0	335
08:15	26	92	0	0	118	1	0	62	0	63	0	92	3	0	95	0	0	0	0	0	276
08:30	22	73	0	0	95	2	0	76	0	78	0	110	9	0	119	0	0	0	0	0	292
Total Volume	92	334	0	0	426	8	0	280	0	288	0	450	21	0	471	0	0	0	0	0	1185
% App. Total	21.6	78.4	0	0		2.8	0	97.2	0		0	95.5	4.5	0		0	0	0	0		
PHF	.885	.908	.000	.000	.903	.500	.000	.737	.000	.727	.000	.872	.583	.000	.885	.000	.000	.000	.000	.000	.884

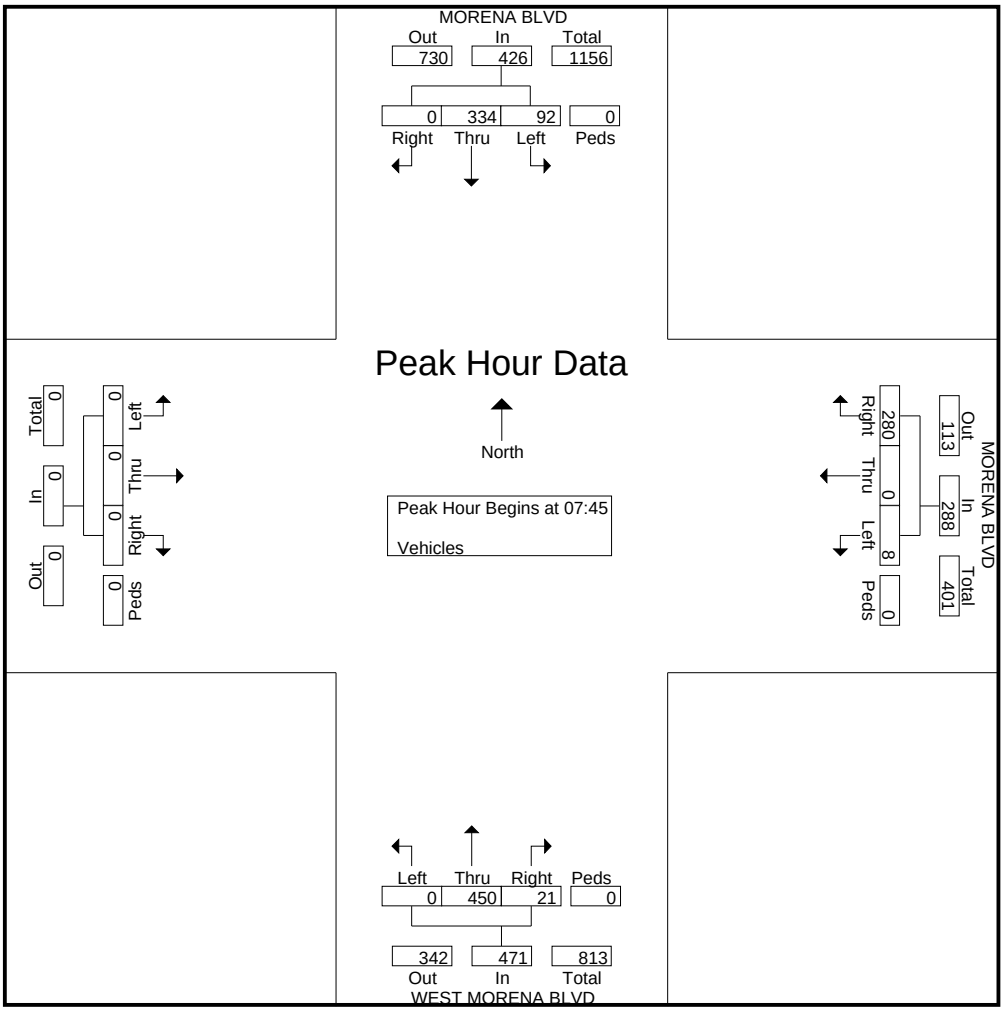

True Count

6520 Lemarand Ave
San Diego, CA 92115

File Name : 09.MORENA BLVD.WEST MORENA BLVD (NORTH)
Site Code : 00000000
Start Date : 2/6/2013
Page No : 3

	MORENA BLVD Southbound					MORENA BLVD Westbound					WEST MORENA BLVD Northbound					Eastbound					
Start Time	Left	Thru	Right	Peds	App. Total	Left	Thru	Right	Peds	App. Total	Left	Thru	Right	Peds	App. Total	Left	Thru	Right	Peds	App. Total	Int. Total
Peak Hour Analysis From 12:00 to 17:45 - Peak 1 of 1																					
Peak Hour for Entire Intersection Begins at 16:45																					
16:45	53	118	0	0	171	6	0	77	0	83	0	104	3	0	107	0	0	0	0	0	361
17:00	49	127	0	0	176	5	0	68	0	73	0	87	15	0	102	0	0	0	0	0	351
17:15	42	134	0	0	176	2	0	89	0	91	0	89	4	0	93	0	0	0	0	0	360
17:30	47	122	0	0	169	2	0	79	0	81	0	107	4	0	111	0	0	0	0	0	361
Total Volume	191	501	0	0	692	15	0	313	0	328	0	387	26	0	413	0	0	0	0	0	1433
% App. Total	27.6	72.4	0	0		4.6	0	95.4	0		0	93.7	6.3	0		0	0	0	0		
PHF	.901	.935	.000	.000	.983	.625	.000	.879	.000	.901	.000	.904	.433	.000	.930	.000	.000	.000	.000	.000	.992

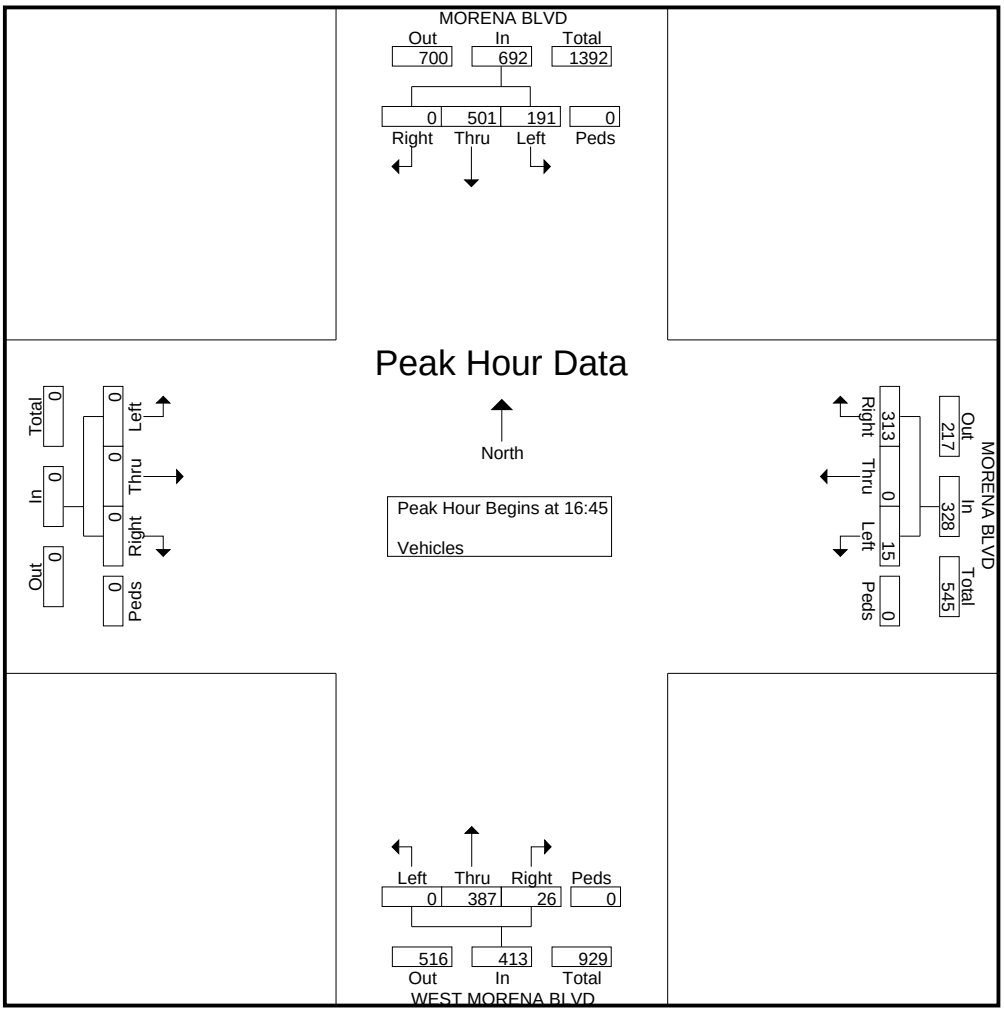

True Count

6520 Lemarand Ave
San Diego, CA 92115

File Name : 10.MORENA BLVD.KNOXVILLE ST
Site Code : 00000000
Start Date : 2/6/2013
Page No : 1

Groups Printed- Vehicles

	MORENA BLVD Southbound				KNOXVILLE ST Westbound				MORENA BLVD Northbound				KNOXVILLE ST Eastbound				
Start Time	Left	Thru	Right	Peds	Left	Thru	Right	Peds	Left	Thru	Right	Peds	Left	Thru	Right	Peds	Int. Total
07:00	0	35	2	0	57	4	5	0	6	33	15	0	0	2	0	0	159
07:15	3	46	1	0	70	0	5	0	2	48	28	0	0	2	1	0	206
07:30	3	41	0	0	70	2	3	0	6	70	55	0	0	1	0	0	251
07:45	2	36	1	0	119	0	5	0	4	71	124	0	0	0	2	0	364
Total	8	158	4	0	316	6	18	0	18	222	222	0	0	5	3	0	980
08:00	3	54	2	0	149	0	10	0	10	106	48	0	0	0	2	0	384
08:15	4	43	0	0	99	0	3	0	4	66	42	0	1	0	5	0	267
08:30	2	45	4	0	81	1	10	0	9	86	61	0	0	0	0	0	299
08:45	2	44	4	0	88	2	8	0	16	76	56	0	0	0	6	0	302
Total	11	186	10	0	417	3	31	0	39	334	207	0	1	0	13	0	1252
*** BREAK ***																	
16:00	4	59	7	0	49	1	7	0	9	98	80	0	4	3	13	0	334
16:15	0	58	3	0	31	0	6	0	19	92	78	0	3	5	10	0	305
16:30	2	75	5	0	51	1	4	0	9	95	67	0	2	5	10	0	326
16:45	4	66	1	0	49	0	2	0	6	101	61	0	2	1	9	0	302
Total	10	258	16	0	180	2	19	0	43	386	286	0	11	14	42	0	1267
17:00	1	95	1	0	44	0	11	0	3	93	75	0	1	0	9	0	333
17:15	4	57	0	0	62	0	7	0	5	102	81	0	2	0	5	0	325
17:30	4	64	0	0	33	0	4	0	3	100	76	0	1	0	2	0	287
17:45	2	62	1	0	48	2	8	0	3	77	86	0	2	0	6	0	297
Total	11	278	2	0	187	2	30	0	14	372	318	0	6	0	22	0	1242
Grand Total	40	880	32	0	1100	13	98	0	114	1314	1033	0	18	19	80	0	4741
Apprch %	4.2	92.4	3.4	0	90.8	1.1	8.1	0	4.6	53.4	42	0	15.4	16.2	68.4	0	
Total %	0.8	18.6	0.7	0	23.2	0.3	2.1	0	2.4	27.7	21.8	0	0.4	0.4	1.7	0	

True Count

6520 Lemarand Ave
San Diego, CA 92115

File Name : 10.MORENA BLVD.KNOXVILLE ST
Site Code : 00000000
Start Date : 2/6/2013
Page No : 2

	MORENA BLVD Southbound					KNOXVILLE ST Westbound					MORENA BLVD Northbound					KNOXVILLE ST Eastbound					
Start Time	**Left**	**Thru**	**Right**	**Peds**	**App. Total**	**Left**	**Thru**	**Right**	**Peds**	**App. Total**	**Left**	**Thru**	**Right**	**Peds**	**App. Total**	**Left**	**Thru**	**Right**	**Peds**	**App. Total**	**Int. Total**
Peak Hour Analysis From 07:00 to 11:45 - Peak 1 of 1																					
Peak Hour for Entire Intersection Begins at 07:45																					
07:45	2	36	1	0	39	119	0	5	0	124	4	71	124	0	199	0	0	2	0	2	364
08:00	3	54	2	0	59	149	0	10	0	159	10	106	48	0	164	0	0	2	0	2	384
08:15	4	43	0	0	47	99	0	3	0	102	4	66	42	0	112	1	0	5	0	6	267
08:30	2	45	4	0	51	81	1	10	0	92	9	86	61	0	156	0	0	0	0	0	299
Total Volume	11	178	7	0	196	448	1	28	0	477	27	329	275	0	631	1	0	9	0	10	1314
% App. Total	5.6	90.8	3.6	0		93.9	0.2	5.9	0		4.3	52.1	43.6	0		10	0	90	0		
PHF	.688	.824	.438	.000	.831	.752	.250	.700	.000	.750	.675	.776	.554	.000	.793	.250	.000	.450	.000	.417	.855

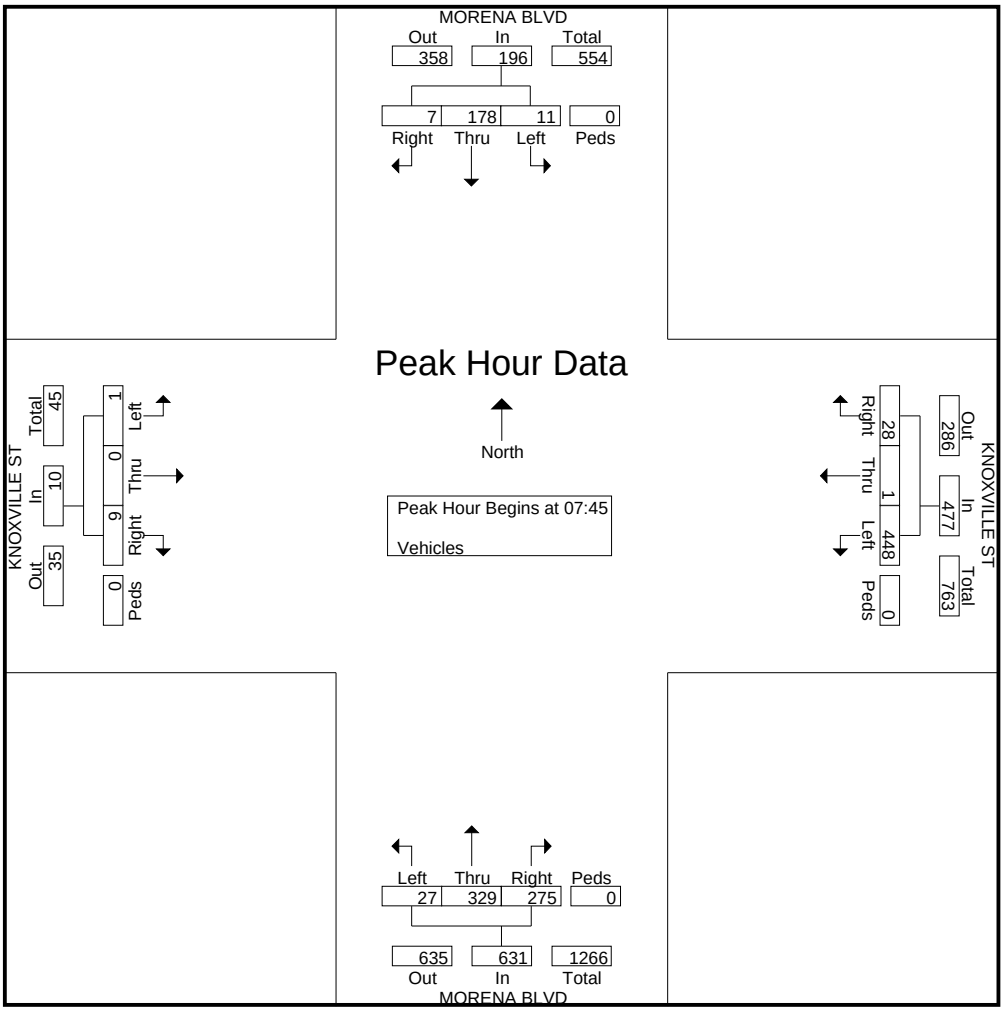

True Count

6520 Lemarand Ave
San Diego, CA 92115

File Name : 10.MORENA BLVD.KNOXVILLE ST
Site Code : 00000000
Start Date : 2/6/2013
Page No : 3

	MORENA BLVD Southbound					KNOXVILLE ST Westbound					MORENA BLVD Northbound					KNOXVILLE ST Eastbound					
Start Time	**Left**	**Thru**	**Right**	**Peds**	**App. Total**	**Left**	**Thru**	**Right**	**Peds**	**App. Total**	**Left**	**Thru**	**Right**	**Peds**	**App. Total**	**Left**	**Thru**	**Right**	**Peds**	**App. Total**	**Int. Total**
Peak Hour Analysis From 12:00 to 17:45 - Peak 1 of 1																					
Peak Hour for Entire Intersection Begins at 16:30																					
16:30	2	75	5	0	82	51	1	4	0	56	9	95	67	0	171	2	5	10	0	17	326
16:45	4	66	1	0	71	49	0	2	0	51	6	101	61	0	168	2	1	9	0	12	302
17:00	1	95	1	0	97	44	0	11	0	55	3	93	75	0	171	1	0	9	0	10	333
17:15	4	57	0	0	61	62	0	7	0	69	5	102	81	0	188	2	0	5	0	7	325
Total Volume	11	293	7	0	311	206	1	24	0	231	23	391	284	0	698	7	6	33	0	46	1286
% App. Total	3.5	94.2	2.3	0		89.2	0.4	10.4	0		3.3	56	40.7	0		15.2	13	71.7	0		
PHF	.688	.771	.350	.000	.802	.831	.250	.545	.000	.837	.639	.958	.877	.000	.928	.875	.300	.825	.000	.676	.965

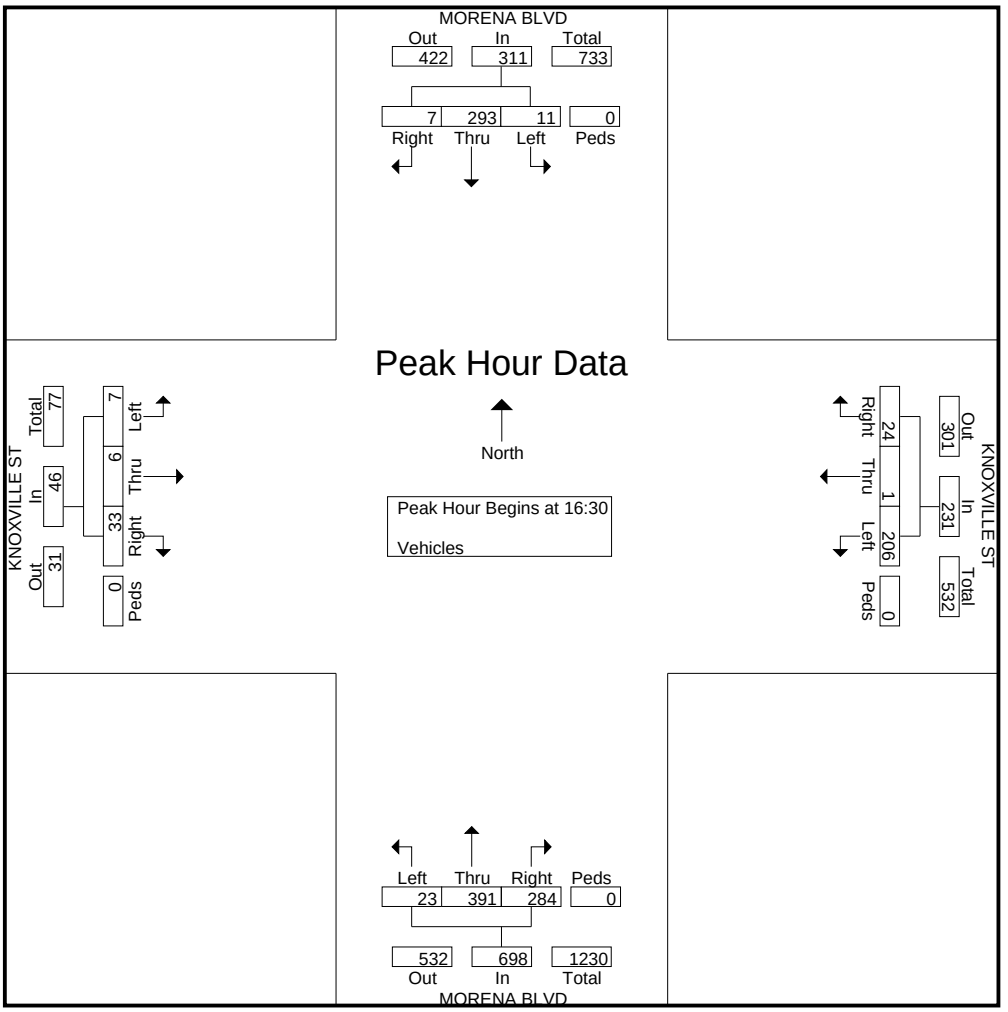

True Count

6520 Lemarand Ave
San Diego, CA 92115

File Name : 11.MORENA BLVD.TECOLOTE RD
Site Code : 00000000
Start Date : 2/6/2013
Page No : 1

Groups Printed- Vehicles

	MORENA BLVD Southbound				TECOLOTE RD Westbound				MORENA BLVD Northbound				TECOLOTE RD Eastbound				
Start Time	Left	Thru	Right	Peds	Left	Thru	Right	Peds	Left	Thru	Right	Peds	Left	Thru	Right	Peds	Int. Total
07:00	2	12	77	0	1	2	1	0	80	18	5	0	38	7	38	0	281
07:15	0	23	91	0	0	4	2	0	103	23	1	0	57	1	58	0	363
07:30	4	20	83	0	1	4	0	0	116	32	8	0	108	6	87	0	469
07:45	8	36	104	0	0	4	0	0	102	65	15	0	139	9	87	0	569
Total	14	91	355	0	2	14	3	0	401	138	29	0	342	23	270	0	1682
08:00	2	41	165	0	6	7	6	0	98	51	6	0	102	21	62	0	567
08:15	6	30	115	0	1	8	2	0	96	37	5	0	82	16	90	0	488
08:30	2	25	93	0	3	5	3	0	90	42	5	0	108	13	94	0	483
08:45	5	29	100	0	3	7	3	0	73	58	8	0	93	12	96	0	487
Total	15	125	473	0	13	27	14	0	357	188	24	0	385	62	342	0	2025
*** BREAK ***																	
16:00	3	30	93	0	8	12	6	0	115	56	5	0	116	12	86	0	542
16:15	3	30	62	0	6	9	2	0	100	63	5	0	124	11	93	0	508
16:30	3	35	89	0	4	5	3	0	94	50	3	0	117	10	92	0	505
16:45	3	48	86	0	3	9	8	0	107	55	2	0	105	10	137	0	573
Total	12	143	330	0	21	35	19	0	416	224	15	0	462	43	408	0	2128
17:00	6	39	91	0	8	19	11	0	122	33	2	0	127	23	137	0	618
17:15	7	50	83	0	8	18	5	0	124	53	6	0	123	14	159	0	650
17:30	1	39	59	0	6	20	6	0	90	52	7	0	117	8	112	0	517
17:45	7	37	72	0	2	16	5	0	85	59	4	0	98	5	115	0	505
Total	21	165	305	0	24	73	27	0	421	197	19	0	465	50	523	0	2290
Grand Total	62	524	1463	0	60	149	63	0	1595	747	87	0	1654	178	1543	0	8125
Apprch %	3	25.6	71.4	0	22.1	54.8	23.2	0	65.7	30.8	3.6	0	49	5.3	45.7	0	
Total %	0.8	6.4	18	0	0.7	1.8	0.8	0	19.6	9.2	1.1	0	20.4	2.2	19	0	

True Count

6520 Lemarand Ave
San Diego, CA 92115

File Name : 11.MORENA BLVD.TECOLOTE RD
Site Code : 00000000
Start Date : 2/6/2013
Page No : 2

	MORENA BLVD Southbound					TECOLOTE RD Westbound					MORENA BLVD Northbound					TECOLOTE RD Eastbound					
Start Time	**Left**	**Thru**	**Right**	**Peds**	**App. Total**	**Left**	**Thru**	**Right**	**Peds**	**App. Total**	**Left**	**Thru**	**Right**	**Peds**	**App. Total**	**Left**	**Thru**	**Right**	**Peds**	**App. Total**	**Int. Total**
Peak Hour Analysis From 07:00 to 11:45 - Peak 1 of 1																					
Peak Hour for Entire Intersection Begins at 07:45																					
07:45	8	36	104	0	148	0	4	0	0	4	102	65	15	0	182	139	9	87	0	235	569
08:00	2	41	165	0	208	6	7	6	0	19	98	51	6	0	155	102	21	62	0	185	567
08:15	6	30	115	0	151	1	8	2	0	11	96	37	5	0	138	82	16	90	0	188	488
08:30	2	25	93	0	120	3	5	3	0	11	90	42	5	0	137	108	13	94	0	215	483
Total Volume	18	132	477	0	627	10	24	11	0	45	386	195	31	0	612	431	59	333	0	823	2107
% App. Total	2.9	21.1	76.1	0		22.2	53.3	24.4	0		63.1	31.9	5.1	0		52.4	7.2	40.5	0		
PHF	.563	.805	.723	.000	.754	.417	.750	.458	.000	.592	.946	.750	.517	.000	.841	.775	.702	.886	.000	.876	.926

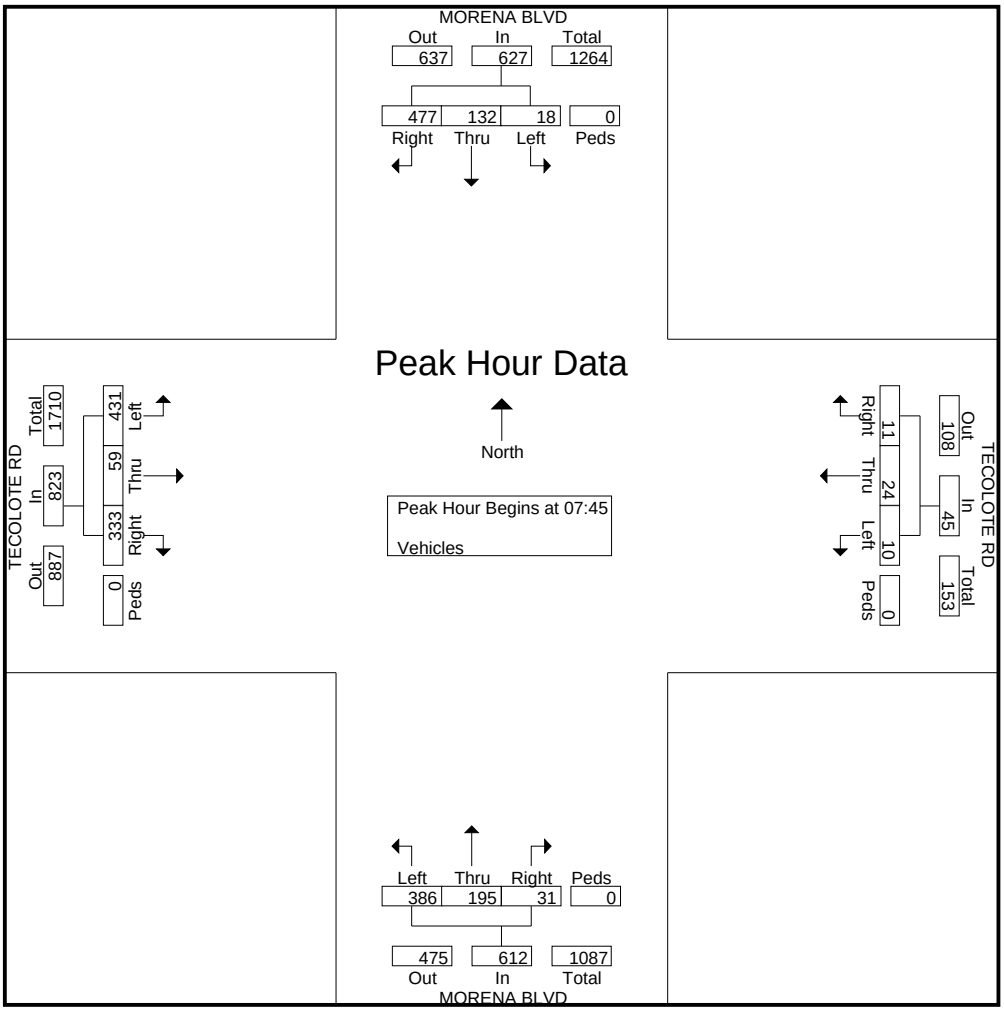

True Count

6520 Lemarand Ave
San Diego, CA 92115

File Name : 11.MORENA BLVD.TECOLOTE RD
Site Code : 00000000
Start Date : 2/6/2013
Page No : 3

	MORENA BLVD Southbound					TECOLOTE RD Westbound					MORENA BLVD Northbound					TECOLOTE RD Eastbound					
Start Time	**Left**	**Thru**	**Right**	**Peds**	**App. Total**	**Left**	**Thru**	**Right**	**Peds**	**App. Total**	**Left**	**Thru**	**Right**	**Peds**	**App. Total**	**Left**	**Thru**	**Right**	**Peds**	**App. Total**	**Int. Total**
Peak Hour Analysis From 12:00 to 17:45 - Peak 1 of 1																					
Peak Hour for Entire Intersection Begins at 16:45																					
16:45	3	48	86	0	137	3	9	8	0	20	107	55	2	0	164	105	10	137	0	252	573
17:00	6	39	91	0	136	8	19	11	0	38	122	33	2	0	157	127	23	137	0	287	618
17:15	7	50	83	0	140	8	18	5	0	31	124	53	6	0	183	123	14	159	0	296	650
17:30	1	39	59	0	99	6	20	6	0	32	90	52	7	0	149	117	8	112	0	237	517
Total Volume	17	176	319	0	512	25	66	30	0	121	443	193	17	0	653	472	55	545	0	1072	2358
% App. Total	3.3	34.4	62.3	0		20.7	54.5	24.8	0		67.8	29.6	2.6	0		44	5.1	50.8	0		
PHF	.607	.880	.876	.000	.914	.781	.825	.682	.000	.796	.893	.877	.607	.000	.892	.929	.598	.857	.000	.905	.907

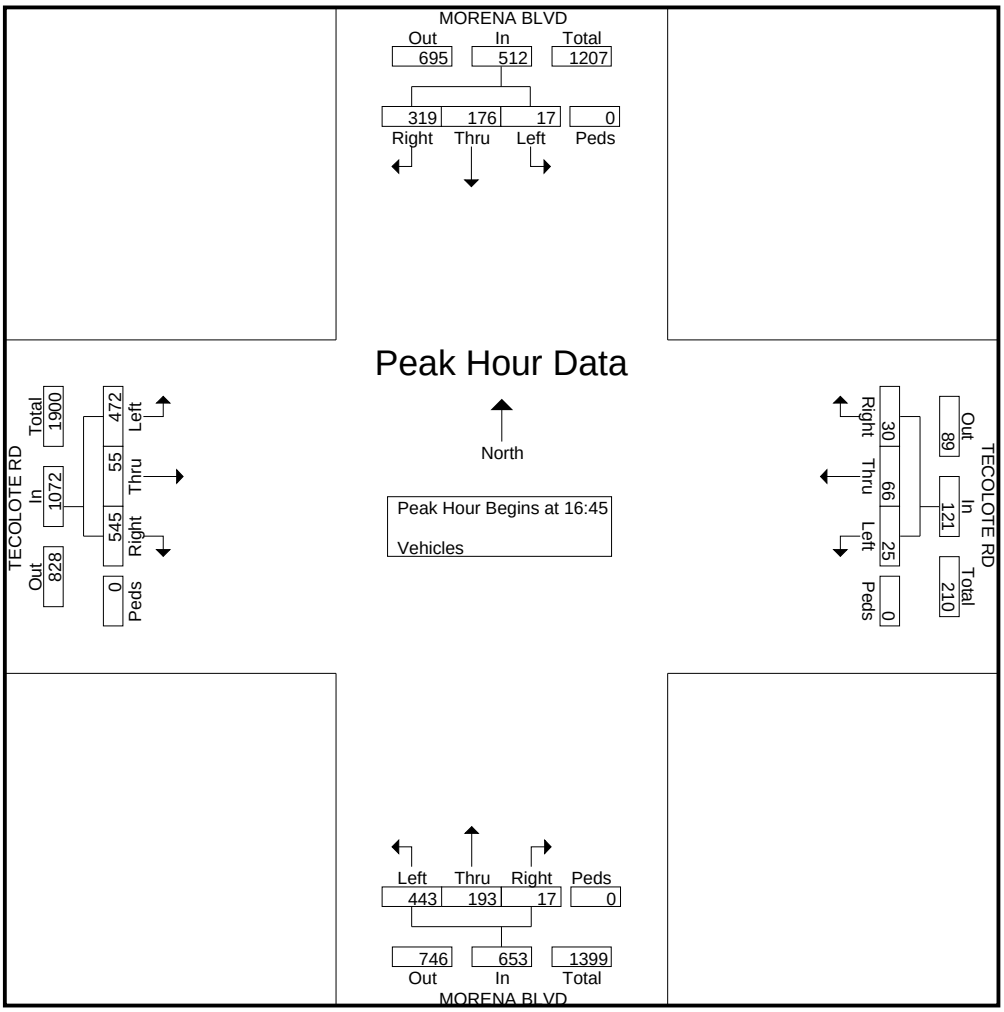

True Count

6520 Lemarand Ave
San Diego, CA 92115

File Name : 12.MORENA BLVD.SAVANNAH ST
Site Code : 00000000
Start Date : 2/5/2013
Page No : 1

Groups Printed- Vehicles

	MORENA BLVD Southbound				Westbound				MORENA BLVD Northbound				SAVANNAH ST Eastbound				
Start Time	Left	Thru	Right	Peds	Left	Thru	Right	Peds	Left	Thru	Right	Peds	Left	Thru	Right	Peds	Int. Total
07:00	0	51	1	0	0	0	0	0	2	98	0	0	0	0	0	0	152
07:15	0	81	1	0	0	0	0	0	1	121	0	0	1	0	0	0	205
07:30	0	101	1	0	0	0	0	0	8	141	0	0	2	0	2	0	255
07:45	0	114	5	0	0	0	0	0	4	190	0	0	1	0	1	0	315
Total	0	347	8	0	0	0	0	0	15	550	0	0	4	0	3	0	927
08:00	0	107	10	0	0	0	0	0	3	152	0	0	2	0	3	0	277
08:15	0	86	9	0	0	0	0	0	6	132	0	0	3	0	1	0	237
08:30	0	110	7	0	0	0	0	0	1	142	0	0	1	0	1	0	262
08:45	0	118	9	0	0	0	0	0	6	125	0	0	3	0	2	0	263
Total	0	421	35	0	0	0	0	0	16	551	0	0	9	0	7	0	1039
*** BREAK ***																	
16:00	0	116	8	0	0	0	0	0	3	161	0	0	9	0	8	0	305
16:15	0	123	3	0	0	0	0	0	2	168	0	0	6	0	6	0	308
16:30	0	118	7	0	0	0	0	0	1	132	0	0	7	0	6	0	271
16:45	0	163	9	0	0	0	0	0	2	130	0	0	9	0	7	0	320
Total	0	520	27	0	0	0	0	0	8	591	0	0	31	0	27	0	1204
17:00	0	178	6	0	0	0	0	0	1	150	0	0	12	0	4	0	351
17:15	0	193	7	0	0	0	0	0	0	162	0	0	8	0	7	0	377
17:30	0	165	4	0	0	0	0	0	1	156	0	0	3	0	6	0	335
17:45	0	142	4	0	0	0	0	0	1	143	0	0	2	0	1	0	293
Total	0	678	21	0	0	0	0	0	3	611	0	0	25	0	18	0	1356
Grand Total	0	1966	91	0	0	0	0	0	42	2303	0	0	69	0	55	0	4526
Apprch %	0	95.6	4.4	0	0	0	0	0	1.8	98.2	0	0	55.6	0	44.4	0	
Total %	0	43.4	2	0	0	0	0	0	0.9	50.9	0	0	1.5	0	1.2	0	

True Count

6520 Lemarand Ave
San Diego, CA 92115

File Name : 12.MORENA BLVD.SAVANNAH ST
Site Code : 00000000
Start Date : 2/5/2013
Page No : 2

	MORENA BLVD Southbound					Westbound					MORENA BLVD Northbound					SAVANNAH ST Eastbound					
Start Time	**Left**	**Thru**	**Right**	**Peds**	**App. Total**	**Left**	**Thru**	**Right**	**Peds**	**App. Total**	**Left**	**Thru**	**Right**	**Peds**	**App. Total**	**Left**	**Thru**	**Right**	**Peds**	**App. Total**	**Int. Total**
Peak Hour Analysis From 07:00 to 11:45 - Peak 1 of 1																					
Peak Hour for Entire Intersection Begins at 07:45																					
07:45	0	114	5	0	119	0	0	0	0	0	4	190	0	0	194	1	0	1	0	2	315
08:00	0	107	10	0	117	0	0	0	0	0	3	152	0	0	155	2	0	3	0	5	277
08:15	0	86	9	0	95	0	0	0	0	0	6	132	0	0	138	3	0	1	0	4	237
08:30	0	110	7	0	117	0	0	0	0	0	1	142	0	0	143	1	0	1	0	2	262
Total Volume	0	417	31	0	448	0	0	0	0	0	14	616	0	0	630	7	0	6	0	13	1091
% App. Total	0	93.1	6.9	0		0	0	0	0		2.2	97.8	0	0		53.8	0	46.2	0		
PHF	.000	.914	.775	.000	.941	.000	.000	.000	.000	.000	.583	.811	.000	.000	.812	.583	.000	.500	.000	.650	.866

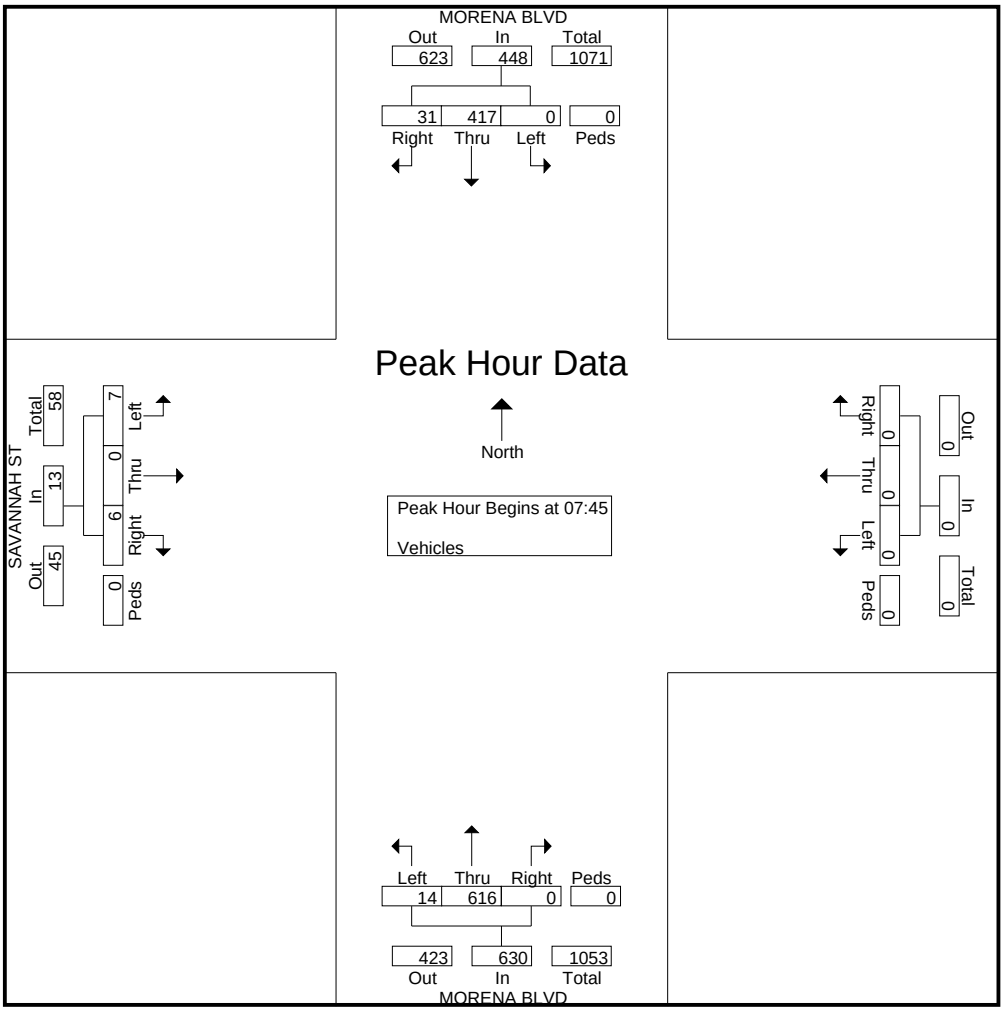

True Count

6520 Lemarand Ave
San Diego, CA 92115

File Name : 12.MORENA BLVD.SAVANNAH ST
Site Code : 00000000
Start Date : 2/5/2013
Page No : 3

	MORENA BLVD Southbound					Westbound					MORENA BLVD Northbound					SAVANNAH ST Eastbound					
Start Time	**Left**	**Thru**	**Right**	**Peds**	**App. Total**	**Left**	**Thru**	**Right**	**Peds**	**App. Total**	**Left**	**Thru**	**Right**	**Peds**	**App. Total**	**Left**	**Thru**	**Right**	**Peds**	**App. Total**	**Int. Total**
Peak Hour Analysis From 12:00 to 17:45 - Peak 1 of 1																					
Peak Hour for Entire Intersection Begins at 16:45																					
16:45	0	163	9	0	172	0	0	0	0	0	2	130	0	0	132	9	0	7	0	16	320
17:00	0	178	6	0	184	0	0	0	0	0	1	150	0	0	151	12	0	4	0	16	351
17:15	0	193	7	0	200	0	0	0	0	0	0	162	0	0	162	8	0	7	0	15	377
17:30	0	165	4	0	169	0	0	0	0	0	1	156	0	0	157	3	0	6	0	9	335
Total Volume	0	699	26	0	725	0	0	0	0	0	4	598	0	0	602	32	0	24	0	56	1383
% App. Total	0	96.4	3.6	0		0	0	0	0		0.7	99.3	0	0		57.1	0	42.9	0		
PHF	.000	.905	.722	.000	.906	.000	.000	.000	.000	.000	.500	.923	.000	.000	.929	.667	.000	.857	.000	.875	.917

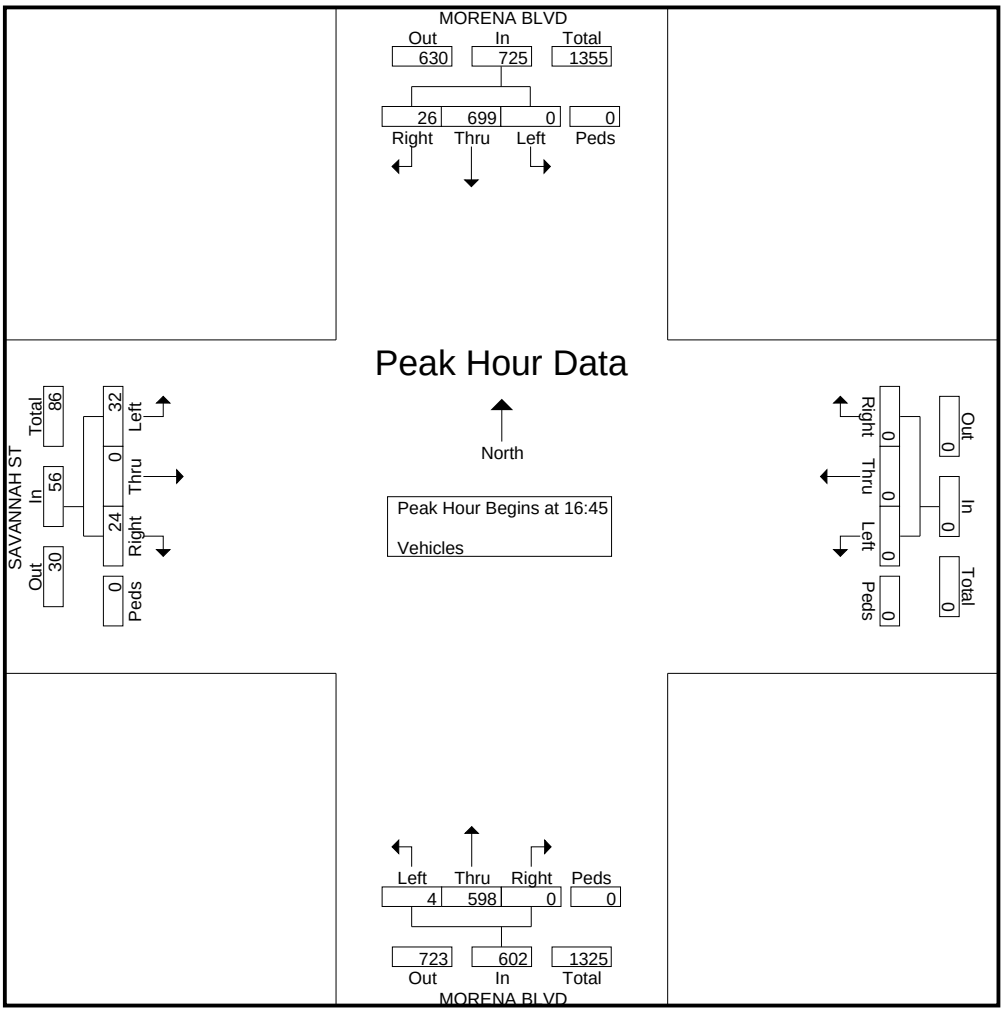

True Count

6520 Lemarand Ave
San Diego, CA 92115

File Name : 13.MORENA BLVD.BUENOS AVE
Site Code : 00000000
Start Date : 2/5/2013
Page No : 1

Groups Printed- Vehicles

	MORENA BLVD Southbound				BUENOS AVE Westbound				MORENA BLVD Northbound				BUENOS AVE Eastbound				
Start Time	Left	Thru	Right	Peds	Left	Thru	Right	Peds	Left	Thru	Right	Peds	Left	Thru	Right	Peds	Int. Total
07:00	2	49	5	0	8	2	1	0	1	93	2	0	6	0	4	0	173
07:15	1	42	7	0	12	5	5	0	3	109	2	0	4	1	2	0	193
07:30	3	91	8	0	12	1	1	0	8	137	4	0	3	2	6	0	276
07:45	0	102	7	0	17	3	2	0	2	181	6	0	7	2	6	0	335
Total	6	284	27	0	49	11	9	0	14	520	14	0	20	5	18	0	977
08:00	1	94	13	0	13	0	2	0	3	172	3	0	5	1	7	0	314
08:15	2	96	8	0	18	1	5	0	3	139	4	0	4	1	6	0	287
08:30	1	76	11	0	15	0	4	0	5	155	4	0	5	1	6	0	283
08:45	0	102	7	0	16	1	1	0	2	145	4	0	11	1	4	0	294
Total	4	368	39	0	62	2	12	0	13	611	15	0	25	4	23	0	1178
*** BREAK ***																	
16:00	3	97	7	0	15	1	3	0	6	150	4	0	18	1	6	0	311
16:15	2	116	13	0	18	2	7	0	11	162	7	0	18	2	9	0	367
16:30	1	129	11	0	12	0	1	0	5	123	11	0	14	2	11	0	320
16:45	5	138	17	0	10	2	3	0	6	114	12	0	16	2	10	0	335
Total	11	480	48	0	55	5	14	0	28	549	34	0	66	7	36	0	1333
17:00	2	166	7	0	23	2	6	0	5	142	5	0	13	1	8	0	380
17:15	2	158	12	0	13	0	3	0	12	123	7	0	15	0	7	0	352
17:30	2	134	7	0	11	2	9	0	3	142	8	0	13	1	5	0	337
17:45	3	104	7	0	10	1	5	0	4	143	7	0	10	3	8	0	305
Total	9	562	33	0	57	5	23	0	24	550	27	0	51	5	28	0	1374
Grand Total	30	1694	147	0	223	23	58	0	79	2230	90	0	162	21	105	0	4862
Apprch %	1.6	90.5	7.9	0	73.4	7.6	19.1	0	3.3	93	3.8	0	56.2	7.3	36.5	0	
Total %	0.6	34.8	3	0	4.6	0.5	1.2	0	1.6	45.9	1.9	0	3.3	0.4	2.2	0	

True Count

6520 Lemarand Ave
San Diego, CA 92115

File Name : 13.MORENA BLVD.BUENOS AVE
Site Code : 00000000
Start Date : 2/5/2013
Page No : 2

	MORENA BLVD Southbound					BUENOS AVE Westbound					MORENA BLVD Northbound					BUENOS AVE Eastbound					
Start Time	**Left**	**Thru**	**Right**	**Peds**	**App. Total**	**Left**	**Thru**	**Right**	**Peds**	**App. Total**	**Left**	**Thru**	**Right**	**Peds**	**App. Total**	**Left**	**Thru**	**Right**	**Peds**	**App. Total**	**Int. Total**
Peak Hour Analysis From 07:00 to 11:45 - Peak 1 of 1																					
Peak Hour for Entire Intersection Begins at 07:45																					
07:45	0	102	7	0	109	17	3	2	0	22	2	181	6	0	189	7	2	6	0	15	335
08:00	1	94	13	0	108	13	0	2	0	15	3	172	3	0	178	5	1	7	0	13	314
08:15	2	96	8	0	106	18	1	5	0	24	3	139	4	0	146	4	1	6	0	11	287
08:30	1	76	11	0	88	15	0	4	0	19	5	155	4	0	164	5	1	6	0	12	283
Total Volume	4	368	39	0	411	63	4	13	0	80	13	647	17	0	677	21	5	25	0	51	1219
% App. Total	1	89.5	9.5	0		78.8	5	16.2	0		1.9	95.6	2.5	0		41.2	9.8	49	0		
PHF	.500	.902	.750	.000	.943	.875	.333	.650	.000	.833	.650	.894	.708	.000	.896	.750	.625	.893	.000	.850	.910

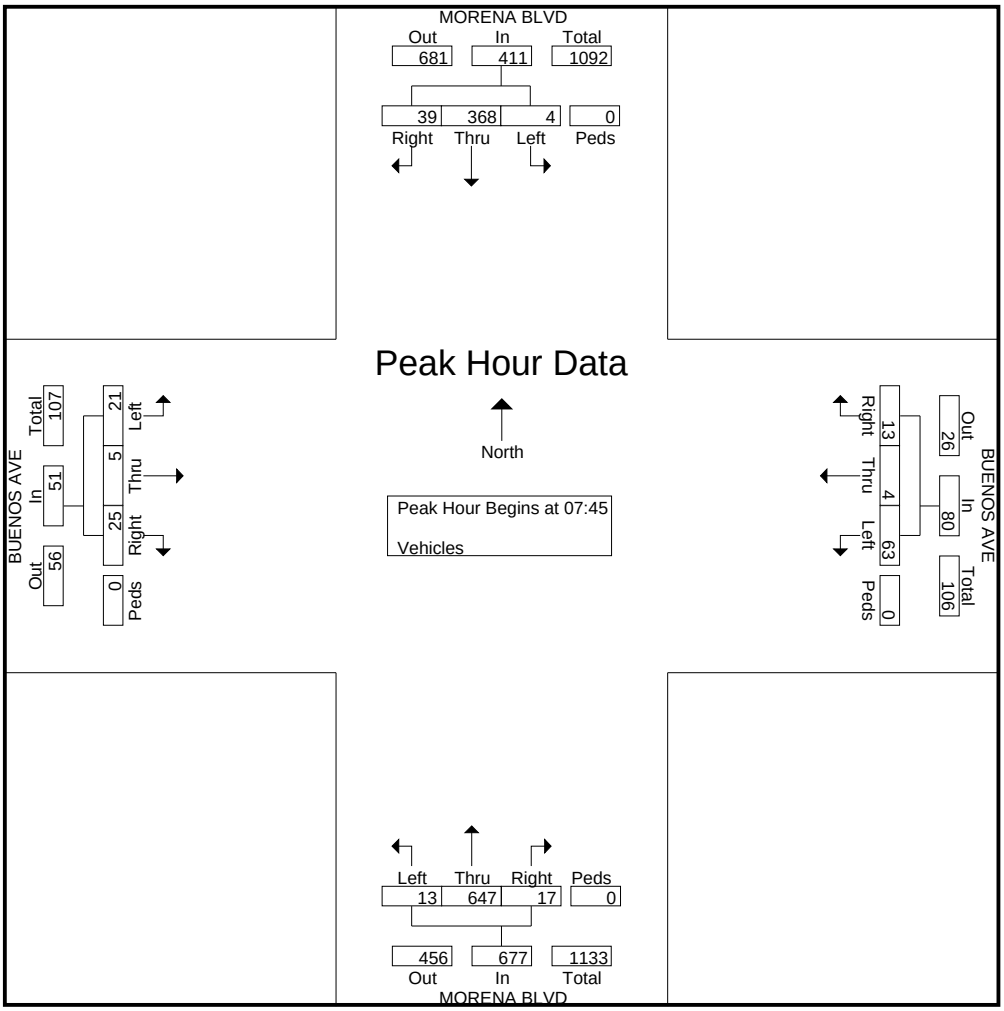

True Count

6520 Lemarand Ave
San Diego, CA 92115

File Name : 13.MORENA BLVD.BUENOS AVE
Site Code : 00000000
Start Date : 2/5/2013
Page No : 3

	MORENA BLVD Southbound					BUENOS AVE Westbound					MORENA BLVD Northbound					BUENOS AVE Eastbound					
Start Time	**Left**	**Thru**	**Right**	**Peds**	**App. Total**	**Left**	**Thru**	**Right**	**Peds**	**App. Total**	**Left**	**Thru**	**Right**	**Peds**	**App. Total**	**Left**	**Thru**	**Right**	**Peds**	**App. Total**	**Int. Total**
Peak Hour Analysis From 12:00 to 17:45 - Peak 1 of 1																					
Peak Hour for Entire Intersection Begins at 16:45																					
16:45	5	138	17	0	160	10	2	3	0	15	6	114	12	0	132	16	2	10	0	28	335
17:00	2	166	7	0	175	23	2	6	0	31	5	142	5	0	152	13	1	8	0	22	380
17:15	2	158	12	0	172	13	0	3	0	16	12	123	7	0	142	15	0	7	0	22	352
17:30	2	134	7	0	143	11	2	9	0	22	3	142	8	0	153	13	1	5	0	19	337
Total Volume	11	596	43	0	650	57	6	21	0	84	26	521	32	0	579	57	4	30	0	91	1404
% App. Total	1.7	91.7	6.6	0		67.9	7.1	25	0		4.5	90	5.5	0		62.6	4.4	33	0		
PHF	.550	.898	.632	.000	.929	.620	.750	.583	.000	.677	.542	.917	.667	.000	.946	.891	.500	.750	.000	.813	.924

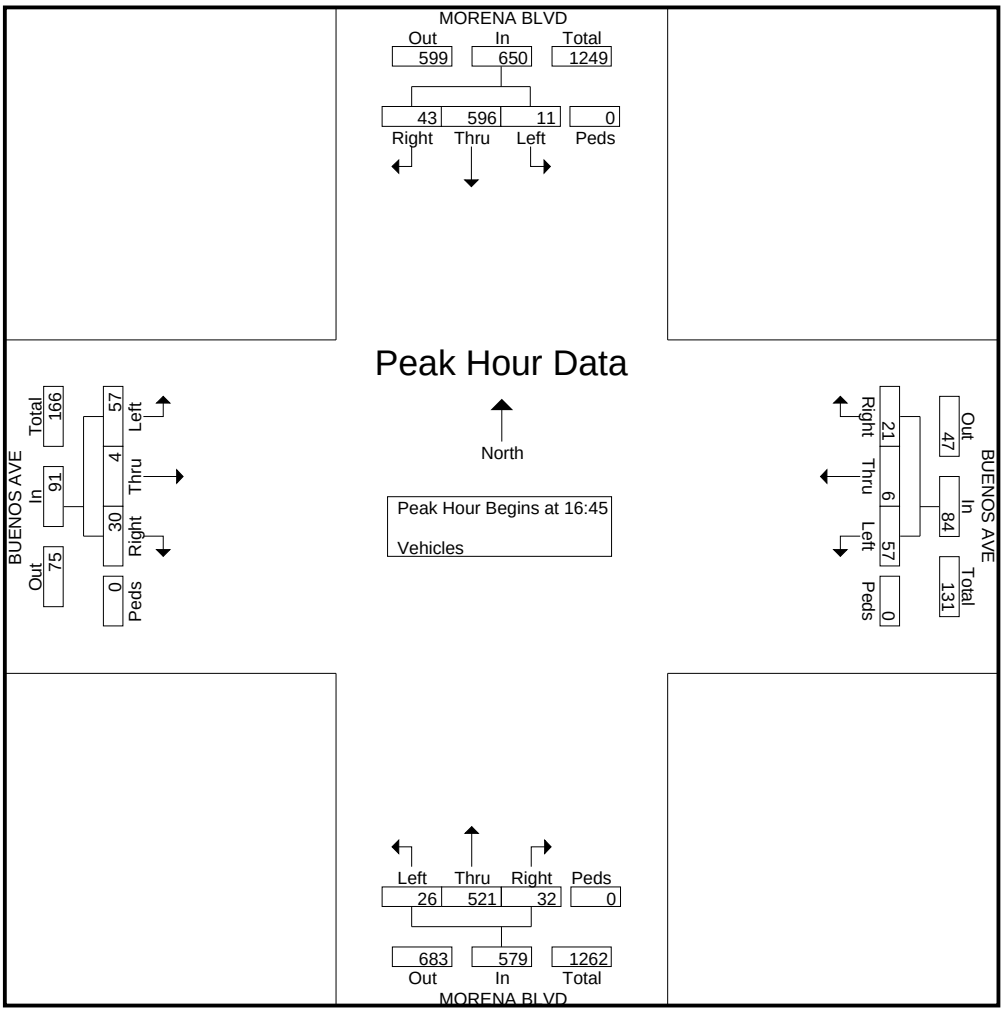

True Count

6520 Lemarand Ave
San Diego, CA 92115

File Name : 14.MORENA BLVD.WEST MORENA BLVD (SOUTH)
Site Code : 00000000
Start Date : 2/5/2013
Page No : 1

Groups Printed- Vehicles

	WEST MORENA BLVD Southbound				MORENA BLVD Westbound				MORENA BLVD Northbound				Eastbound				
Start Time	Left	Thru	Right	Peds	Left	Thru	Right	Peds	Left	Thru	Right	Peds	Left	Thru	Right	Peds	Int. Total
07:00	0	63	0	0	57	0	1	0	0	69	102	0	0	0	0	0	292
07:15	0	91	0	0	107	0	0	0	0	71	144	0	0	0	0	0	413
07:30	0	74	0	0	114	0	1	0	0	111	181	0	0	0	0	0	481
07:45	0	94	0	0	120	0	0	0	0	162	215	0	0	0	0	0	591
Total	0	322	0	0	398	0	2	0	0	413	642	0	0	0	0	0	1777
08:00	0	101	0	0	119	0	0	0	0	150	168	0	0	0	0	0	538
08:15	0	82	0	0	96	0	2	0	0	130	156	0	0	0	0	0	466
08:30	0	78	0	0	123	0	2	0	0	140	158	0	0	0	0	0	501
08:45	0	119	0	0	128	0	2	0	0	117	154	0	0	0	0	0	520
Total	0	380	0	0	466	0	6	0	0	537	636	0	0	0	0	0	2025
*** BREAK ***																	
16:00	0	154	0	0	120	0	7	0	0	115	179	0	0	0	0	0	575
16:15	0	139	0	0	145	0	4	0	0	121	188	0	0	0	0	0	597
16:30	0	136	0	0	162	0	7	0	0	109	145	0	0	0	0	0	559
16:45	0	179	0	0	173	0	4	0	0	105	141	0	0	0	0	0	602
Total	0	608	0	0	600	0	22	0	0	450	653	0	0	0	0	0	2333
17:00	0	164	0	0	202	0	2	0	0	112	146	0	0	0	0	0	626
17:15	0	160	0	0	175	0	0	0	0	103	156	0	0	0	0	0	594
17:30	0	157	0	0	145	0	1	0	0	86	152	0	0	0	0	0	541
17:45	0	141	0	0	125	0	1	0	0	94	144	0	0	0	0	0	505
Total	0	622	0	0	647	0	4	0	0	395	598	0	0	0	0	0	2266
Grand Total	0	1932	0	0	2111	0	34	0	0	1795	2529	0	0	0	0	0	8401
Apprch %	0	100	0	0	98.4	0	1.6	0	0	41.5	58.5	0	0	0	0	0	
Total %	0	23	0	0	25.1	0	0.4	0	0	21.4	30.1	0	0	0	0	0	

True Count

6520 Lemarand Ave
San Diego, CA 92115

File Name : 14.MORENA BLVD.WEST MORENA BLVD (SOUTH)
Site Code : 00000000
Start Date : 2/5/2013
Page No : 2

	WEST MORENA BLVD Southbound					MORENA BLVD Westbound					MORENA BLVD Northbound					Eastbound					
Start Time	**Left**	**Thru**	**Right**	**Peds**	**App. Total**	**Left**	**Thru**	**Right**	**Peds**	**App. Total**	**Left**	**Thru**	**Right**	**Peds**	**App. Total**	**Left**	**Thru**	**Right**	**Peds**	**App. Total**	**Int. Total**
Peak Hour Analysis From 07:00 to 11:45 - Peak 1 of 1																					
Peak Hour for Entire Intersection Begins at 07:45																					
07:45	0	94	0	0	94	120	0	0	0	120	0	162	215	0	377	0	0	0	0	0	591
08:00	0	101	0	0	101	119	0	0	0	119	0	150	168	0	318	0	0	0	0	0	538
08:15	0	82	0	0	82	96	0	2	0	98	0	130	156	0	286	0	0	0	0	0	466
08:30	0	78	0	0	78	123	0	2	0	125	0	140	158	0	298	0	0	0	0	0	501
Total Volume	0	355	0	0	355	458	0	4	0	462	0	582	697	0	1279	0	0	0	0	0	2096
% App. Total	0	100	0	0		99.1	0	0.9	0		0	45.5	54.5	0		0	0	0	0		
PHF	.000	.879	.000	.000	.879	.931	.000	.500	.000	.924	.000	.898	.810	.000	.848	.000	.000	.000	.000	.000	.887

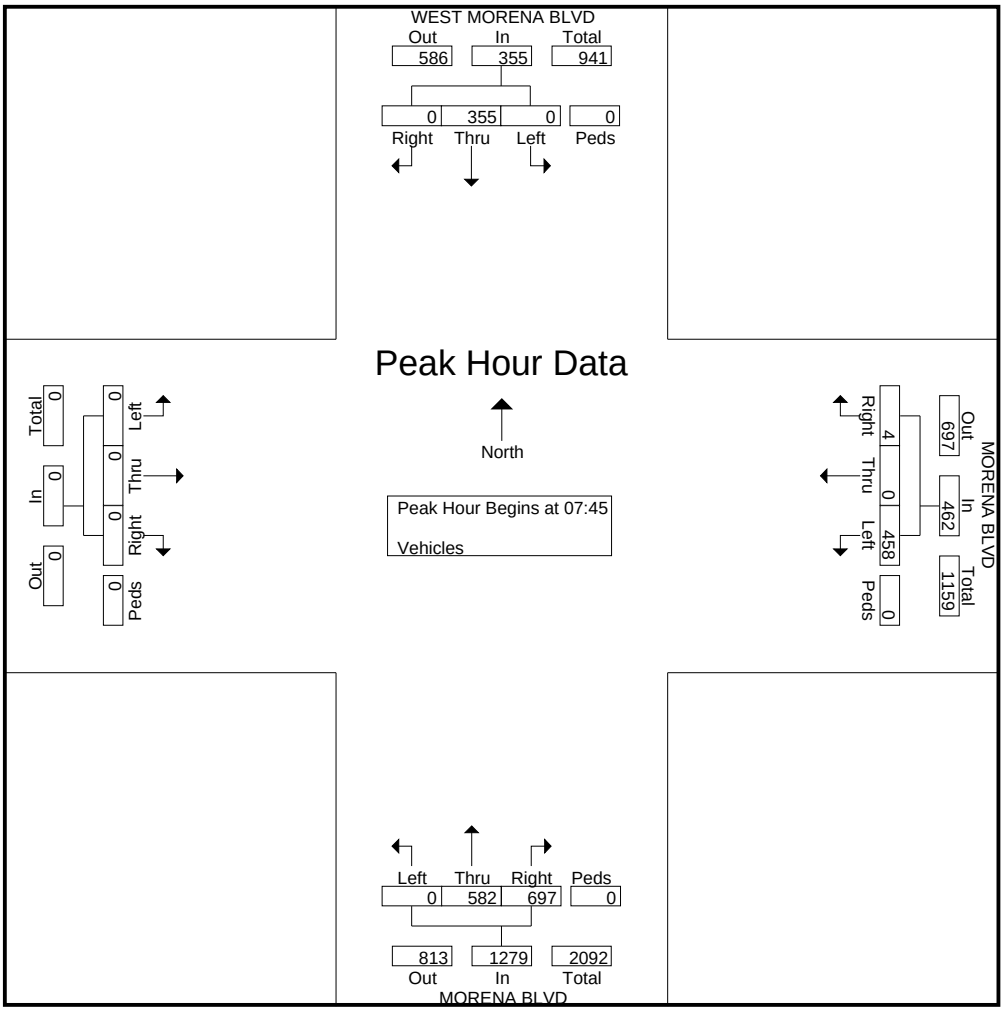

True Count

6520 Lemarand Ave
San Diego, CA 92115

File Name : 14.MORENA BLVD.WEST MORENA BLVD (SOUTH)
Site Code : 00000000
Start Date : 2/5/2013
Page No : 3

	WEST MORENA BLVD Southbound					MORENA BLVD Westbound					MORENA BLVD Northbound					Eastbound					
Start Time	**Left**	**Thru**	**Right**	**Peds**	**App. Total**	**Left**	**Thru**	**Right**	**Peds**	**App. Total**	**Left**	**Thru**	**Right**	**Peds**	**App. Total**	**Left**	**Thru**	**Right**	**Peds**	**App. Total**	**Int. Total**
Peak Hour Analysis From 12:00 to 17:45 - Peak 1 of 1																					
Peak Hour for Entire Intersection Begins at 16:15																					
16:15	0	139	0	0	139	145	0	4	0	149	0	121	188	0	309	0	0	0	0	0	597
16:30	0	136	0	0	136	162	0	7	0	169	0	109	145	0	254	0	0	0	0	0	559
16:45	0	179	0	0	179	173	0	4	0	177	0	105	141	0	246	0	0	0	0	0	602
17:00	0	164	0	0	164	202	0	2	0	204	0	112	146	0	258	0	0	0	0	0	626
Total Volume	0	618	0	0	618	682	0	17	0	699	0	447	620	0	1067	0	0	0	0	0	2384
% App. Total	0	100	0	0		97.6	0	2.4	0		0	41.9	58.1	0		0	0	0	0		
PHF	.000	.863	.000	.000	.863	.844	.000	.607	.000	.857	.000	.924	.824	.000	.863	.000	.000	.000	.000	.000	.952

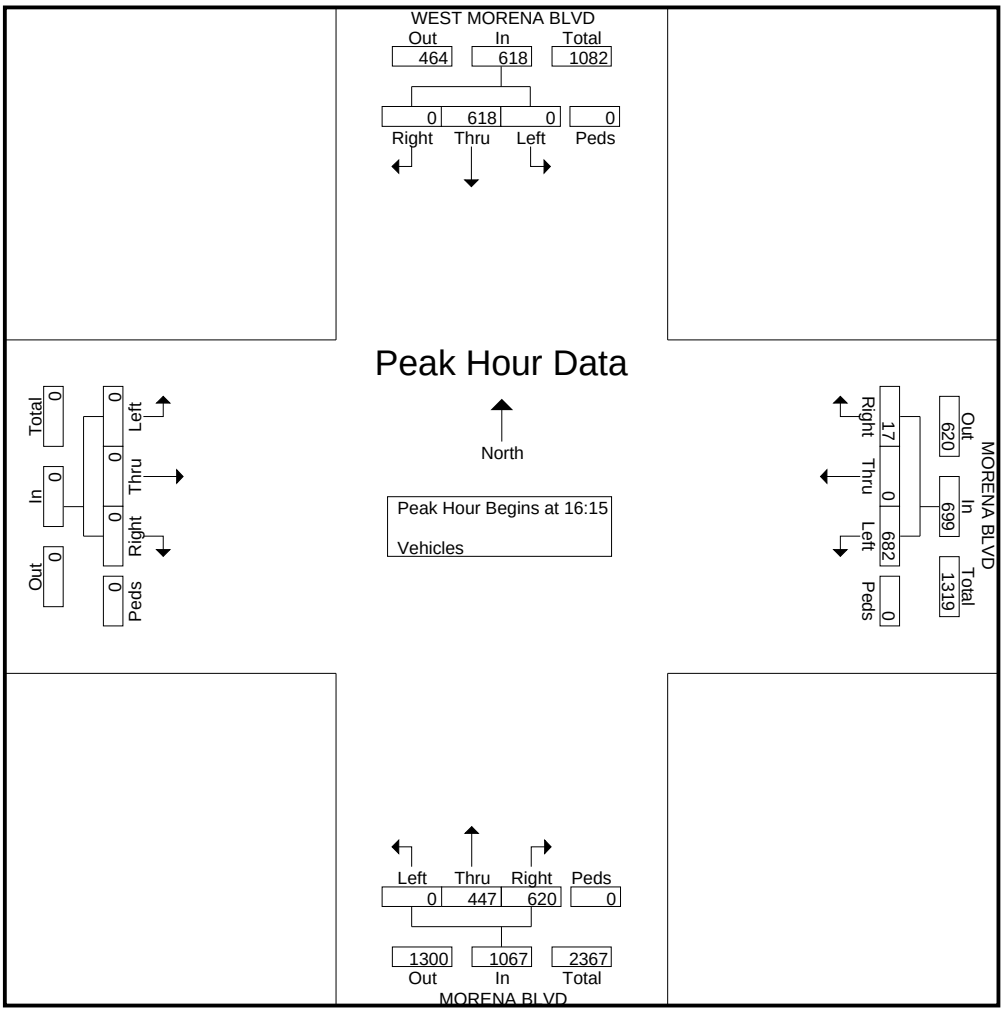

True Count

6520 Lemarand Ave
San Diego, CA 92115

File Name : 16.WEST MORENA BLVD.VEGA ST
Site Code : 00000000
Start Date : 2/6/2013
Page No : 1

Groups Printed- Vehicles

	WEST MORENA BLVD Southbound				VEGA ST Westbound				WEST MORENA BLVD Northbound				DRIVEWAY Eastbound				
Start Time	Left	Thru	Right	Peds	Left	Thru	Right	Peds	Left	Thru	Right	Peds	Left	Thru	Right	Peds	Int. Total
07:00	2	52	3	0	0	0	4	0	0	42	2	0	2	0	0	0	107
07:15	2	68	2	0	1	0	1	0	4	68	1	0	0	0	0	0	147
07:30	0	89	0	0	0	0	0	0	2	102	0	0	1	0	0	0	194
07:45	1	97	0	0	2	1	0	0	4	116	3	0	0	0	0	0	224
Total	5	306	5	0	3	1	5	0	10	328	6	0	3	0	0	0	672
08:00	3	87	0	0	0	1	2	0	4	131	4	0	2	1	0	0	235
08:15	6	89	0	0	1	2	3	0	4	109	1	0	0	0	0	0	215
08:30	5	63	0	0	0	1	5	0	8	100	2	0	2	0	0	0	186
08:45	5	104	2	0	1	2	1	0	3	98	1	0	2	1	3	0	223
Total	19	343	2	0	2	6	11	0	19	438	8	0	6	2	3	0	859
*** BREAK ***																	
16:00	2	89	2	0	6	3	6	0	18	66	5	0	10	2	8	0	217
16:15	3	85	6	0	8	7	5	0	7	91	7	0	8	2	4	0	233
16:30	4	95	4	0	4	1	4	0	8	66	0	0	6	4	10	0	206
16:45	1	118	4	0	7	3	1	0	14	99	3	0	2	0	1	0	253
Total	10	387	16	0	25	14	16	0	47	322	15	0	26	8	23	0	909
17:00	5	115	6	0	10	4	3	0	19	84	3	0	8	1	9	0	267
17:15	2	143	2	0	8	3	0	0	16	78	6	0	7	2	3	0	270
17:30	1	117	3	0	11	1	1	0	18	62	5	0	9	1	7	0	236
17:45	2	104	2	0	6	2	1	0	14	58	4	0	7	1	6	0	207
Total	10	479	13	0	35	10	5	0	67	282	18	0	31	5	25	0	980
Grand Total	44	1515	36	0	65	31	37	0	143	1370	47	0	66	15	51	0	3420
Apprch %	2.8	95	2.3	0	48.9	23.3	27.8	0	9.2	87.8	3	0	50	11.4	38.6	0	
Total %	1.3	44.3	1.1	0	1.9	0.9	1.1	0	4.2	40.1	1.4	0	1.9	0.4	1.5	0	

True Count

6520 Lemarand Ave
San Diego, CA 92115

File Name : 16.WEST MORENA BLVD.VEGA ST
Site Code : 00000000
Start Date : 2/6/2013
Page No : 2

	WEST MORENA BLVD Southbound					VEGA ST Westbound					WEST MORENA BLVD Northbound					DRIVEWAY Eastbound					
Start Time	**Left**	**Thru**	**Right**	**Peds**	**App. Total**	**Left**	**Thru**	**Right**	**Peds**	**App. Total**	**Left**	**Thru**	**Right**	**Peds**	**App. Total**	**Left**	**Thru**	**Right**	**Peds**	**App. Total**	**Int. Total**
Peak Hour Analysis From 07:00 to 11:45 - Peak 1 of 1																					
Peak Hour for Entire Intersection Begins at 07:30																					
07:30	0	89	0	0	89	0	0	0	0	0	2	102	0	0	104	1	0	0	0	1	194
07:45	1	97	0	0	98	2	1	0	0	3	4	116	3	0	123	0	0	0	0	0	224
08:00	3	87	0	0	90	0	1	2	0	3	4	131	4	0	139	2	1	0	0	3	235
08:15	6	89	0	0	95	1	2	3	0	6	4	109	1	0	114	0	0	0	0	0	215
Total Volume	10	362	0	0	372	3	4	5	0	12	14	458	8	0	480	3	1	0	0	4	868
% App. Total	2.7	97.3	0	0		25	33.3	41.7	0		2.9	95.4	1.7	0		75	25	0	0		
PHF	.417	.933	.000	.000	.949	.375	.500	.417	.000	.500	.875	.874	.500	.000	.863	.375	.250	.000	.000	.333	.923

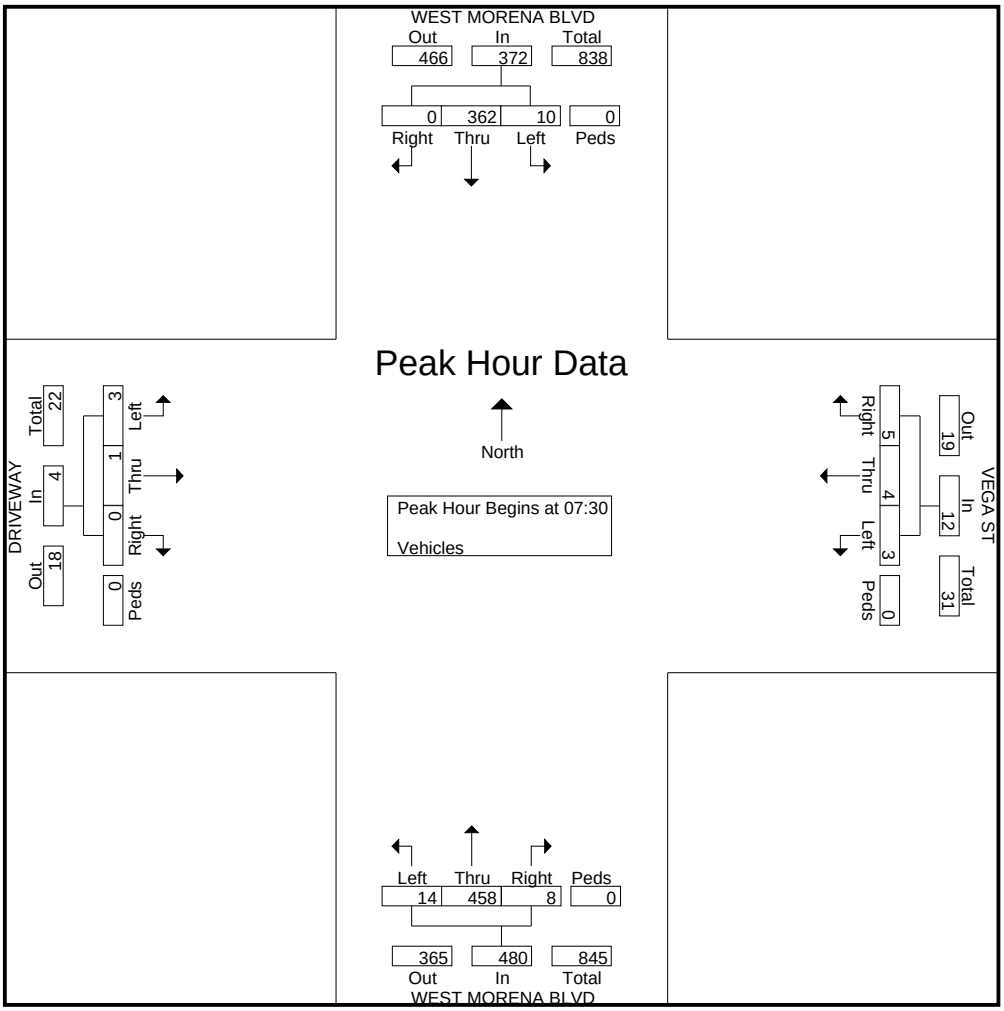

True Count

6520 Lemarand Ave
San Diego, CA 92115

File Name : 16.WEST MORENA BLVD.VEGA ST
Site Code : 00000000
Start Date : 2/6/2013
Page No : 3

	WEST MORENA BLVD Southbound					VEGA ST Westbound					WEST MORENA BLVD Northbound					DRIVEWAY Eastbound					
Start Time	**Left**	**Thru**	**Right**	**Peds**	**App. Total**	**Left**	**Thru**	**Right**	**Peds**	**App. Total**	**Left**	**Thru**	**Right**	**Peds**	**App. Total**	**Left**	**Thru**	**Right**	**Peds**	**App. Total**	**Int. Total**
Peak Hour Analysis From 12:00 to 17:45 - Peak 1 of 1																					
Peak Hour for Entire Intersection Begins at 16:45																					
16:45	1	118	4	0	123	7	3	1	0	11	14	99	3	0	116	2	0	1	0	3	253
17:00	5	115	6	0	126	10	4	3	0	17	19	84	3	0	106	8	1	9	0	18	267
17:15	2	143	2	0	147	8	3	0	0	11	16	78	6	0	100	7	2	3	0	12	270
17:30	1	117	3	0	121	11	1	1	0	13	18	62	5	0	85	9	1	7	0	17	236
Total Volume	9	493	15	0	517	36	11	5	0	52	67	323	17	0	407	26	4	20	0	50	1026
% App. Total	1.7	95.4	2.9	0		69.2	21.2	9.6	0		16.5	79.4	4.2	0		52	8	40	0		
PHF	.450	.862	.625	.000	.879	.818	.688	.417	.000	.765	.882	.816	.708	.000	.877	.722	.500	.556	.000	.694	.950

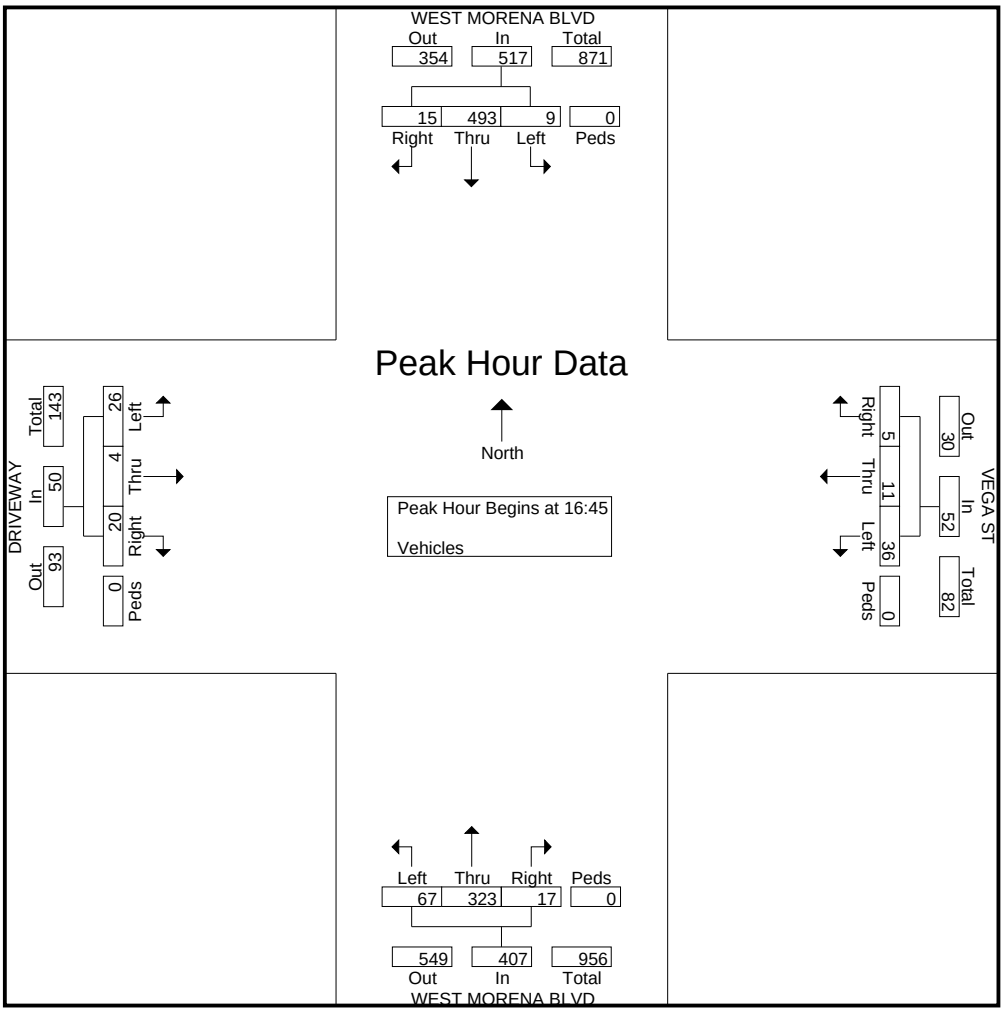

True Count

6520 Lemarand Ave
San Diego, CA 92115

File Name : 17.WEST MORENA BLVD.BUENOS AVE
Site Code : 00000000
Start Date : 2/5/2013
Page No : 1

Groups Printed- Vehicles

	WEST MORENA BLVD Southbound				BUENOS AVE Westbound				WEST MORENA BLVD Northbound				BUENOS AVE Eastbound				
Start Time	Left	Thru	Right	Peds	Left	Thru	Right	Peds	Left	Thru	Right	Peds	Left	Thru	Right	Peds	Int. Total
07:00	3	50	3	0	3	6	3	0	14	52	6	0	0	1	1	0	142
07:15	5	78	1	0	2	5	4	0	14	53	4	0	0	4	5	0	175
07:30	2	70	1	0	0	4	3	0	21	82	7	0	1	2	5	0	198
07:45	8	95	1	0	4	6	4	0	26	136	12	0	0	4	2	0	298
Total	18	293	6	0	9	21	14	0	75	323	29	0	1	11	13	0	813
08:00	5	91	3	0	4	5	1	0	16	137	9	0	0	1	4	0	276
08:15	2	80	4	0	3	7	0	0	25	97	11	0	3	1	6	0	239
08:30	5	69	3	0	0	7	3	0	27	103	7	0	1	7	4	0	236
08:45	1	110	6	0	3	10	3	0	23	98	7	0	1	3	8	0	273
Total	13	350	16	0	10	29	7	0	91	435	34	0	5	12	22	0	1024
*** BREAK ***																	
16:00	8	121	3	0	5	2	6	0	12	91	10	0	5	6	21	0	290
16:15	13	114	2	0	8	8	10	0	10	100	18	0	3	7	12	0	305
16:30	10	102	3	0	4	4	9	0	14	79	15	0	2	10	26	0	278
16:45	10	147	0	0	8	8	7	0	10	93	8	0	3	7	23	0	324
Total	41	484	8	0	25	22	32	0	46	363	51	0	13	30	82	0	1197
17:00	5	116	1	0	10	2	10	0	10	104	7	0	5	5	20	0	295
17:15	14	142	0	0	10	5	8	0	11	96	4	0	1	6	13	0	310
17:30	3	137	0	0	9	9	2	0	5	76	7	0	3	11	8	0	270
17:45	8	123	2	0	3	1	2	0	6	81	5	0	0	1	9	0	241
Total	30	518	3	0	32	17	22	0	32	357	23	0	9	23	50	0	1116
Grand Total	102	1645	33	0	76	89	75	0	244	1478	137	0	28	76	167	0	4150
Apprch %	5.7	92.4	1.9	0	31.7	37.1	31.2	0	13.1	79.5	7.4	0	10.3	28	61.6	0	
Total %	2.5	39.6	0.8	0	1.8	2.1	1.8	0	5.9	35.6	3.3	0	0.7	1.8	4	0	

True Count

6520 Lemarand Ave
San Diego, CA 92115

File Name : 17.WEST MORENA BLVD.BUENOS AVE
Site Code : 00000000
Start Date : 2/5/2013
Page No : 2

	WEST MORENA BLVD Southbound					BUENOS AVE Westbound					WEST MORENA BLVD Northbound					BUENOS AVE Eastbound					
Start Time	**Left**	**Thru**	**Right**	**Peds**	**App. Total**	**Left**	**Thru**	**Right**	**Peds**	**App. Total**	**Left**	**Thru**	**Right**	**Peds**	**App. Total**	**Left**	**Thru**	**Right**	**Peds**	**App. Total**	**Int. Total**
Peak Hour Analysis From 07:00 to 11:45 - Peak 1 of 1																					
Peak Hour for Entire Intersection Begins at 07:45																					
07:45	8	95	1	0	104	4	6	4	0	14	26	136	12	0	174	0	4	2	0	6	298
08:00	5	91	3	0	99	4	5	1	0	10	16	137	9	0	162	0	1	4	0	5	276
08:15	2	80	4	0	86	3	7	0	0	10	25	97	11	0	133	3	1	6	0	10	239
08:30	5	69	3	0	77	0	7	3	0	10	27	103	7	0	137	1	7	4	0	12	236
Total Volume	20	335	11	0	366	11	25	8	0	44	94	473	39	0	606	4	13	16	0	33	1049
% App. Total	5.5	91.5	3	0		25	56.8	18.2	0		15.5	78.1	6.4	0		12.1	39.4	48.5	0		
PHF	.625	.882	.688	.000	.880	.688	.893	.500	.000	.786	.870	.863	.813	.000	.871	.333	.464	.667	.000	.688	.880

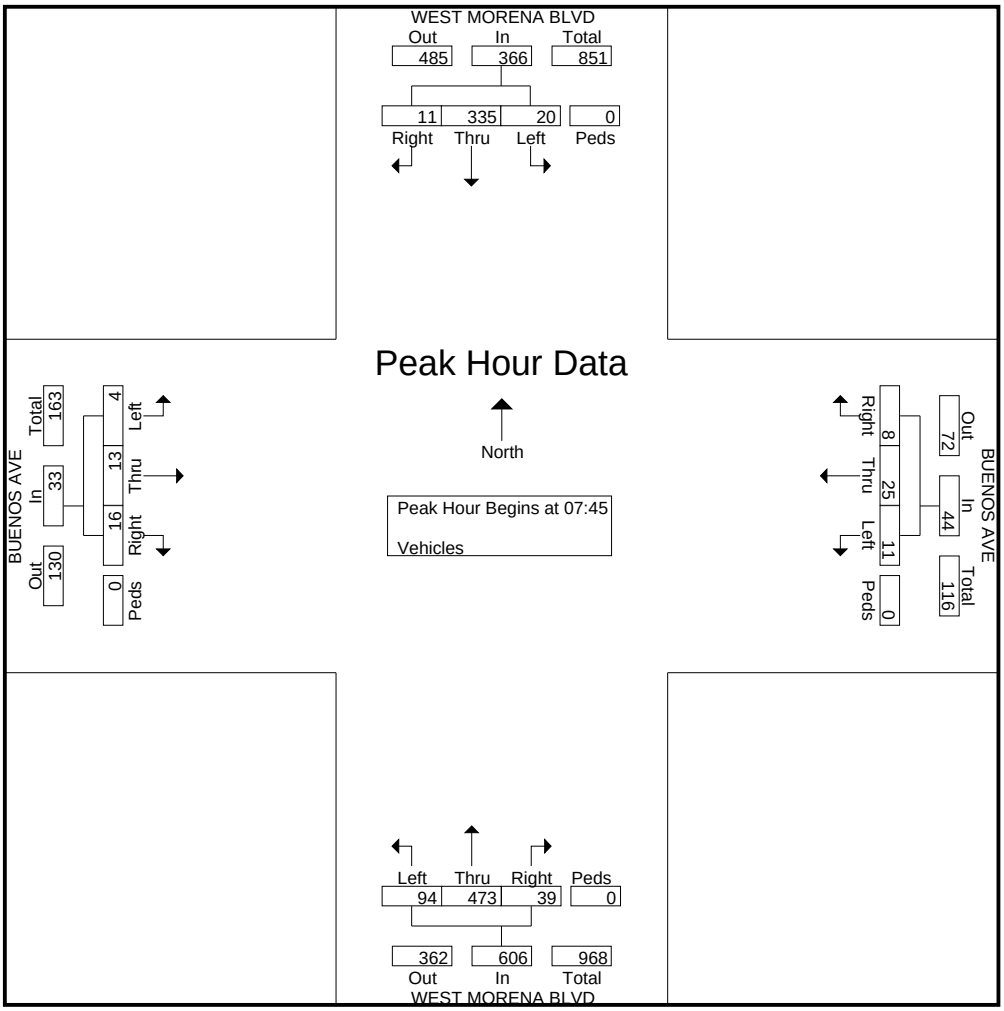

True Count

6520 Lemarand Ave
San Diego, CA 92115

File Name : 17.WEST MORENA BLVD.BUENOS AVE
Site Code : 00000000
Start Date : 2/5/2013
Page No : 3

	WEST MORENA BLVD Southbound					BUENOS AVE Westbound					WEST MORENA BLVD Northbound					BUENOS AVE Eastbound					
Start Time	**Left**	**Thru**	**Right**	**Peds**	**App. Total**	**Left**	**Thru**	**Right**	**Peds**	**App. Total**	**Left**	**Thru**	**Right**	**Peds**	**App. Total**	**Left**	**Thru**	**Right**	**Peds**	**App. Total**	**Int. Total**
Peak Hour Analysis From 12:00 to 17:45 - Peak 1 of 1																					
Peak Hour for Entire Intersection Begins at 16:30																					
16:30	10	102	3	0	115	4	4	9	0	17	14	79	15	0	108	2	10	26	0	38	278
16:45	10	147	0	0	157	8	8	7	0	23	10	93	8	0	111	3	7	23	0	33	324
17:00	5	116	1	0	122	10	2	10	0	22	10	104	7	0	121	5	5	20	0	30	295
17:15	14	142	0	0	156	10	5	8	0	23	11	96	4	0	111	1	6	13	0	20	310
Total Volume	39	507	4	0	550	32	19	34	0	85	45	372	34	0	451	11	28	82	0	121	1207
% App. Total	7.1	92.2	0.7	0		37.6	22.4	40	0		10	82.5	7.5	0		9.1	23.1	67.8	0		
PHF	.696	.862	.333	.000	.876	.800	.594	.850	.000	.924	.804	.894	.567	.000	.932	.550	.700	.788	.000	.796	.931

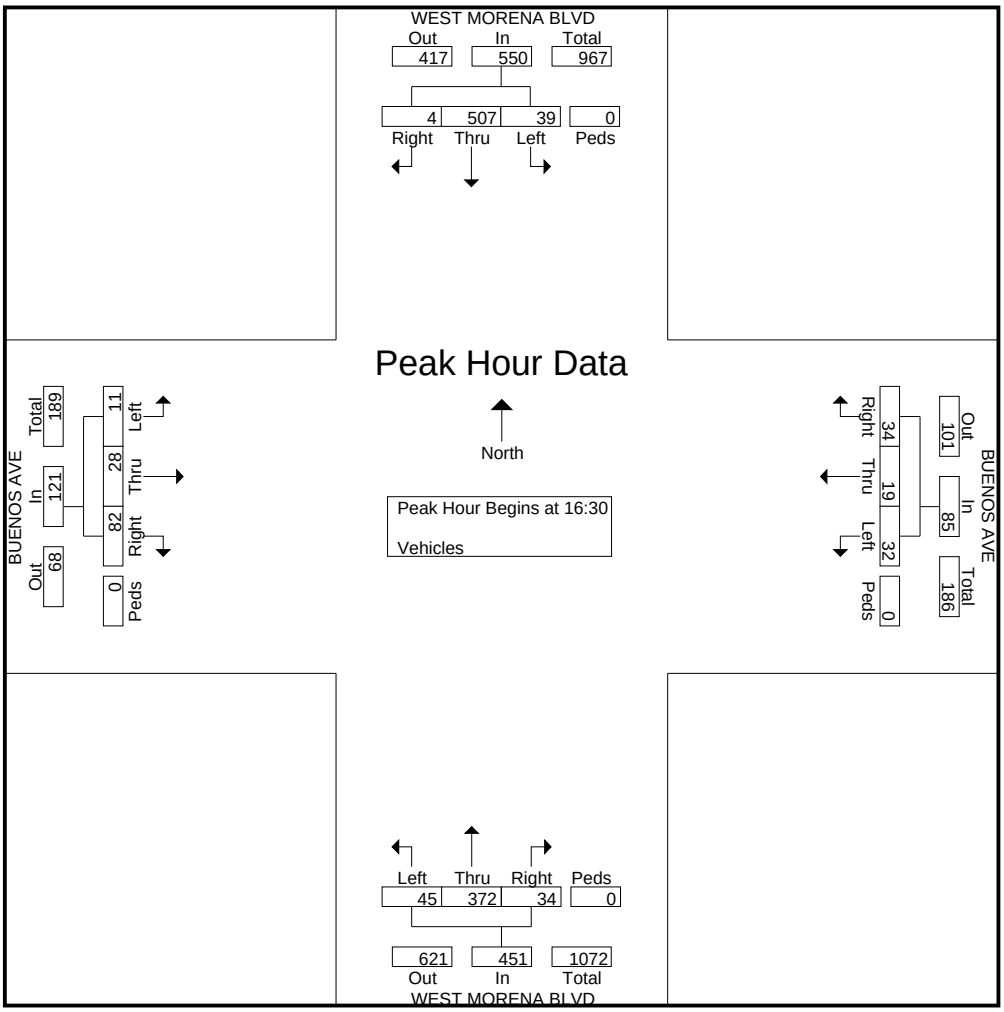

True Count

6520 Lemarand Ave
San Diego, CA 92115

File Name : 18.MORENA BLVD.SHERMAN ST
Site Code : 00000000
Start Date : 2/5/2013
Page No : 1

Groups Printed- Vehicles

	MORENA BLVD Southbound				NAPA ST Westbound				MORENA BLVD Northbound				SHERMAN ST Eastbound				
Start Time	Left	Thru	Right	Peds	Left	Thru	Right	Peds	Left	Thru	Right	Peds	Left	Thru	Right	Peds	Int. Total
07:00	54	58	6	0	1	3	75	0	33	75	4	0	4	2	7	0	322
07:15	90	86	11	0	1	4	92	0	37	115	1	0	7	2	4	0	450
07:30	125	64	9	0	0	5	109	0	22	151	3	0	3	6	8	0	505
07:45	107	90	19	0	0	4	163	0	34	183	3	0	7	2	11	0	623
Total	376	298	45	0	2	16	439	0	126	524	11	0	21	12	30	0	1900
08:00	111	101	16	0	1	2	136	0	28	161	2	0	6	4	16	0	584
08:15	95	80	5	0	2	6	118	0	38	182	2	0	4	2	7	0	541
08:30	116	79	5	0	1	2	140	0	30	152	3	0	7	3	8	0	546
08:45	127	99	11	0	0	14	111	0	36	132	2	0	7	5	18	0	562
Total	449	359	37	0	4	24	505	0	132	627	9	0	24	14	49	0	2233
*** BREAK ***																	
16:00	128	161	5	0	5	4	180	0	17	94	2	0	16	6	44	0	662
16:15	110	151	7	0	3	7	148	0	26	139	4	0	12	7	44	0	658
16:30	158	147	8	0	6	4	134	0	21	83	4	0	8	8	64	0	645
16:45	180	163	8	0	3	3	132	0	20	109	3	0	9	13	28	0	671
Total	576	622	28	0	17	18	594	0	84	425	13	0	45	34	180	0	2636
17:00	159	180	9	0	2	0	146	0	15	101	6	0	13	9	42	0	682
17:15	188	166	8	0	4	5	156	0	14	82	3	0	7	3	26	0	662
17:30	166	133	11	0	6	3	145	0	11	98	4	0	9	6	12	0	604
17:45	149	104	5	0	3	2	146	0	15	89	4	0	9	7	19	0	552
Total	662	583	33	0	15	10	593	0	55	370	17	0	38	25	99	0	2500
Grand Total	2063	1862	143	0	38	68	2131	0	397	1946	50	0	128	85	358	0	9269
Apprch %	50.7	45.8	3.5	0	1.7	3	95.3	0	16.6	81.3	2.1	0	22.4	14.9	62.7	0	
Total %	22.3	20.1	1.5	0	0.4	0.7	23	0	4.3	21	0.5	0	1.4	0.9	3.9	0	

True Count

6520 Lemarand Ave
San Diego, CA 92115

File Name : 18.MORENA BLVD.SHERMAN ST
Site Code : 00000000
Start Date : 2/5/2013
Page No : 2

	MORENA BLVD Southbound					NAPA ST Westbound					MORENA BLVD Northbound					SHERMAN ST Eastbound					
Start Time	**Left**	**Thru**	**Right**	**Peds**	**App. Total**	**Left**	**Thru**	**Right**	**Peds**	**App. Total**	**Left**	**Thru**	**Right**	**Peds**	**App. Total**	**Left**	**Thru**	**Right**	**Peds**	**App. Total**	**Int. Total**
Peak Hour Analysis From 07:00 to 11:45 - Peak 1 of 1																					
Peak Hour for Entire Intersection Begins at 07:45																					
07:45	107	90	19	0	216	0	4	163	0	167	34	183	3	0	220	7	2	11	0	20	623
08:00	111	101	16	0	228	1	2	136	0	139	28	161	2	0	191	6	4	16	0	26	584
08:15	95	80	5	0	180	2	6	118	0	126	38	182	2	0	222	4	2	7	0	13	541
08:30	116	79	5	0	200	1	2	140	0	143	30	152	3	0	185	7	3	8	0	18	546
Total Volume	429	350	45	0	824	4	14	557	0	575	130	678	10	0	818	24	11	42	0	77	2294
% App. Total	52.1	42.5	5.5	0		0.7	2.4	96.9	0		15.9	82.9	1.2	0		31.2	14.3	54.5	0		
PHF	.925	.866	.592	.000	.904	.500	.583	.854	.000	.861	.855	.926	.833	.000	.921	.857	.688	.656	.000	.740	.921

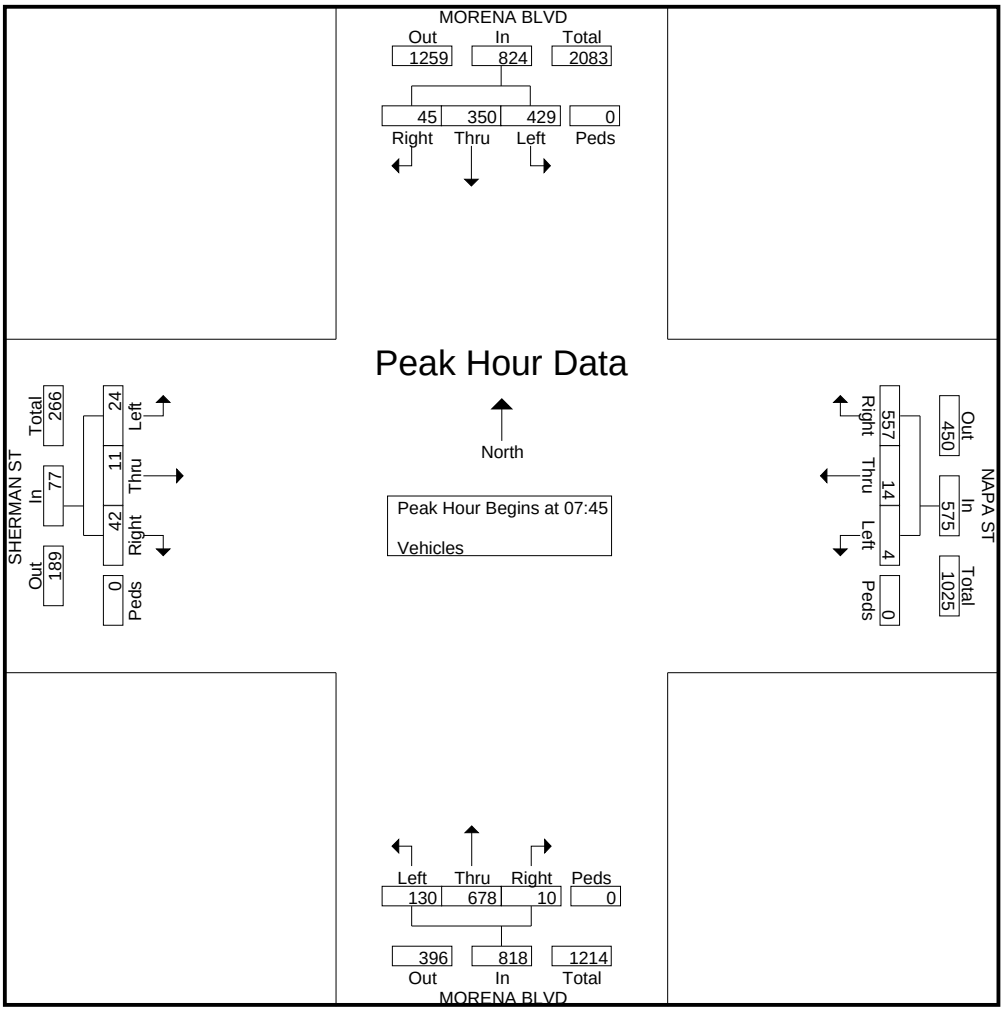

True Count

6520 Lemarand Ave
San Diego, CA 92115

File Name : 18.MORENA BLVD.SHERMAN ST
Site Code : 00000000
Start Date : 2/5/2013
Page No : 3

	MORENA BLVD Southbound					NAPA ST Westbound					MORENA BLVD Northbound					SHERMAN ST Eastbound					
Start Time	**Left**	**Thru**	**Right**	**Peds**	**App. Total**	**Left**	**Thru**	**Right**	**Peds**	**App. Total**	**Left**	**Thru**	**Right**	**Peds**	**App. Total**	**Left**	**Thru**	**Right**	**Peds**	**App. Total**	**Int. Total**
Peak Hour Analysis From 12:00 to 17:45 - Peak 1 of 1																					
Peak Hour for Entire Intersection Begins at 16:30																					
16:30	158	147	8	0	313	6	4	134	0	144	21	83	4	0	108	8	8	64	0	80	645
16:45	180	163	8	0	351	3	3	132	0	138	20	109	3	0	132	9	13	28	0	50	671
17:00	159	180	9	0	348	2	0	146	0	148	15	101	6	0	122	13	9	42	0	64	682
17:15	188	166	8	0	362	4	5	156	0	165	14	82	3	0	99	7	3	26	0	36	662
Total Volume	685	656	33	0	1374	15	12	568	0	595	70	375	16	0	461	37	33	160	0	230	2660
% App. Total	49.9	47.7	2.4	0		2.5	2	95.5	0		15.2	81.3	3.5	0		16.1	14.3	69.6	0		
PHF	.911	.911	.917	.000	.949	.625	.600	.910	.000	.902	.833	.860	.667	.000	.873	.712	.635	.625	.000	.719	.975

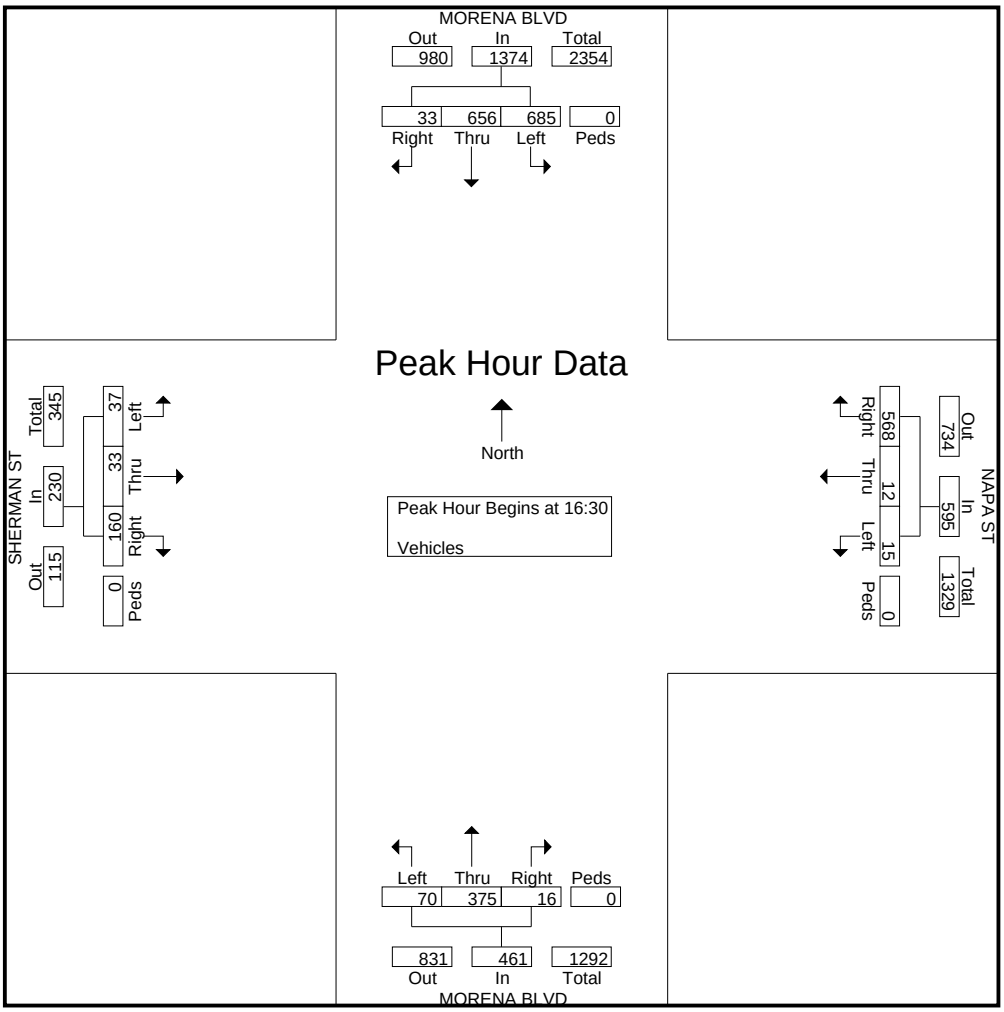

True Count

6520 Lemarand Ave
San Diego, CA 92115

File Name : 19.MORENA BLVD.LINDA VISTA RD
Site Code : 00000000
Start Date : 2/12/2013
Page No : 1

Groups Printed- Vehicles

	MORENA BLVD Southbound				LINDA VISTA RD Westbound				MORENA BLVD Northbound				Eastbound				
Start Time	Left	Thru	Right	Peds	Left	Thru	Right	Peds	Left	Thru	Right	Peds	Left	Thru	Right	Peds	Int. Total
07:00	0	60	0	0	136	0	0	0	0	126	132	0	0	0	0	0	454
07:15	0	95	0	0	136	0	0	0	0	155	189	0	0	0	0	0	575
07:30	0	70	0	0	180	0	0	0	0	197	213	0	0	0	0	0	660
07:45	0	103	0	0	212	0	0	0	0	247	203	0	0	0	0	0	765
Total	0	328	0	0	664	0	0	0	0	725	737	0	0	0	0	0	2454
08:00	0	116	0	0	168	0	0	0	0	200	172	0	0	0	0	0	656
08:15	0	95	0	0	145	0	0	0	0	209	196	0	0	0	0	0	645
08:30	0	91	0	0	147	0	0	0	0	193	226	0	0	0	0	0	657
08:45	0	102	0	0	122	0	0	0	0	180	208	0	0	0	0	0	612
Total	0	404	0	0	582	0	0	0	0	782	802	0	0	0	0	0	2570
*** BREAK ***																	
16:00	0	211	0	0	238	0	0	0	0	113	196	0	0	0	0	0	758
16:15	0	193	0	0	233	0	0	0	0	140	201	0	0	0	0	0	767
16:30	0	217	0	0	187	0	0	0	0	128	191	0	0	0	0	0	723
16:45	0	190	0	0	215	0	0	0	0	127	229	0	0	0	0	0	761
Total	0	811	0	0	873	0	0	0	0	508	817	0	0	0	0	0	3009
17:00	0	221	0	0	238	0	0	0	0	109	227	0	0	0	0	0	795
17:15	0	201	0	0	228	0	0	0	0	96	227	0	0	0	0	0	752
17:30	0	149	0	0	243	0	0	0	0	105	189	0	0	0	0	0	686
17:45	0	133	0	0	191	0	0	0	0	110	219	0	0	0	0	0	653
Total	0	704	0	0	900	0	0	0	0	420	862	0	0	0	0	0	2886
Grand Total	0	2247	0	0	3019	0	0	0	0	2435	3218	0	0	0	0	0	10919
Apprch %	0	100	0	0	100	0	0	0	0	43.1	56.9	0	0	0	0	0	
Total %	0	20.6	0	0	27.6	0	0	0	0	22.3	29.5	0	0	0	0	0	

True Count

6520 Lemarand Ave
San Diego, CA 92115

File Name : 19.MORENA BLVD.LINDA VISTA RD
Site Code : 00000000
Start Date : 2/12/2013
Page No : 2

	MORENA BLVD Southbound					LINDA VISTA RD Westbound					MORENA BLVD Northbound					Eastbound					
Start Time	**Left**	**Thru**	**Right**	**Peds**	**App. Total**	**Left**	**Thru**	**Right**	**Peds**	**App. Total**	**Left**	**Thru**	**Right**	**Peds**	**App. Total**	**Left**	**Thru**	**Right**	**Peds**	**App. Total**	**Int. Total**
Peak Hour Analysis From 07:00 to 11:45 - Peak 1 of 1																					
Peak Hour for Entire Intersection Begins at 07:30																					
07:30	0	70	0	0	70	180	0	0	0	180	0	197	213	0	410	0	0	0	0	0	660
07:45	0	103	0	0	103	212	0	0	0	212	0	247	203	0	450	0	0	0	0	0	765
08:00	0	116	0	0	116	168	0	0	0	168	0	200	172	0	372	0	0	0	0	0	656
08:15	0	95	0	0	95	145	0	0	0	145	0	209	196	0	405	0	0	0	0	0	645
Total Volume	0	384	0	0	384	705	0	0	0	705	0	853	784	0	1637	0	0	0	0	0	2726
% App. Total	0	100	0	0		100	0	0	0		0	52.1	47.9	0		0	0	0	0		
PHF	.000	.828	.000	.000	.828	.831	.000	.000	.000	.831	.000	.863	.920	.000	.909	.000	.000	.000	.000	.000	.891

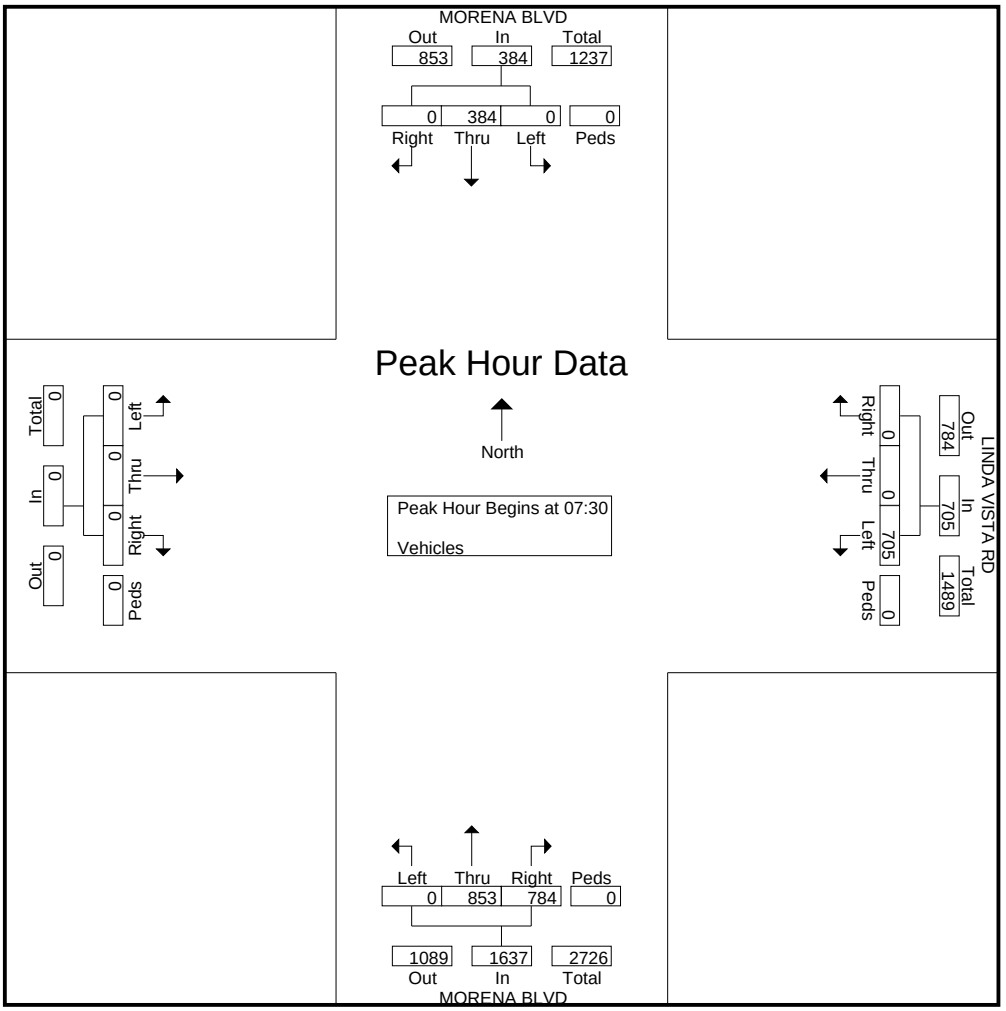

True Count

6520 Lemarand Ave
San Diego, CA 92115

File Name : 19.MORENA BLVD.LINDA VISTA RD
Site Code : 00000000
Start Date : 2/12/2013
Page No : 3

	MORENA BLVD Southbound					LINDA VISTA RD Westbound					MORENA BLVD Northbound					Eastbound					
Start Time	**Left**	**Thru**	**Right**	**Peds**	**App. Total**	**Left**	**Thru**	**Right**	**Peds**	**App. Total**	**Left**	**Thru**	**Right**	**Peds**	**App. Total**	**Left**	**Thru**	**Right**	**Peds**	**App. Total**	**Int. Total**
Peak Hour Analysis From 12:00 to 17:45 - Peak 1 of 1																					
Peak Hour for Entire Intersection Begins at 16:15																					
16:15	0	193	0	0	193	233	0	0	0	233	0	140	201	0	341	0	0	0	0	0	767
16:30	0	217	0	0	217	187	0	0	0	187	0	128	191	0	319	0	0	0	0	0	723
16:45	0	190	0	0	190	215	0	0	0	215	0	127	229	0	356	0	0	0	0	0	761
17:00	0	221	0	0	221	238	0	0	0	238	0	109	227	0	336	0	0	0	0	0	795
Total Volume	0	821	0	0	821	873	0	0	0	873	0	504	848	0	1352	0	0	0	0	0	3046
% App. Total	0	100	0	0		100	0	0	0		0	37.3	62.7	0		0	0	0	0		
PHF	.000	.929	.000	.000	.929	.917	.000	.000	.000	.917	.000	.900	.926	.000	.949	.000	.000	.000	.000	.000	.958

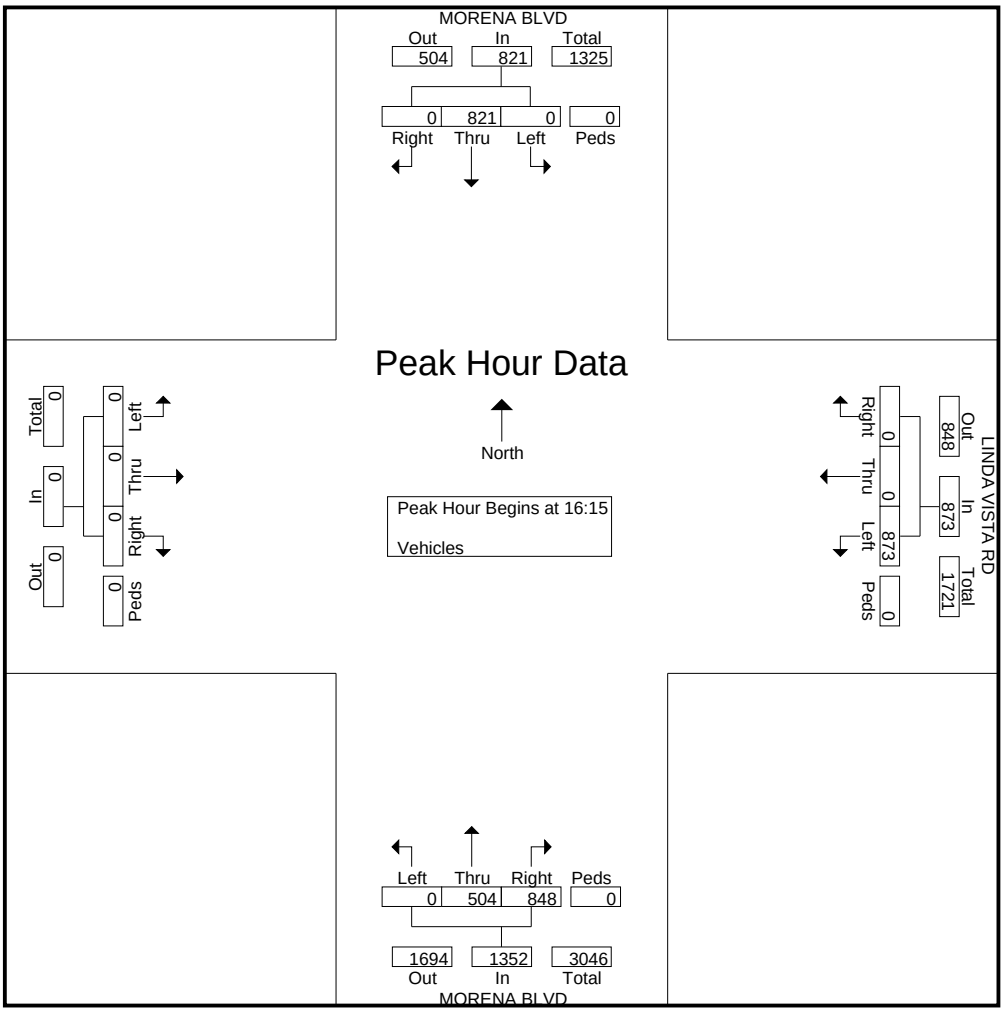

True Count

6520 Lemarand Ave
San Diego, CA 92115

File Name : 20.NAPA ST.LINDA VISTA RD
Site Code : 00000000
Start Date : 2/5/2013
Page No : 1

Groups Printed- Vehicles

	NAPA ST Southbound				LINDA VISTA RD Westbound				NAPA ST Northbound				LINDA VISTA RD Eastbound				
Start Time	Left	Thru	Right	Peds	Left	Thru	Right	Peds	Left	Thru	Right	Peds	Left	Thru	Right	Peds	Int. Total
07:00	45	22	6	0	10	77	50	0	49	29	9	0	3	107	20	0	427
07:15	65	41	4	0	14	97	60	0	47	46	38	0	8	142	26	0	588
07:30	89	30	6	0	16	112	55	0	56	63	68	0	6	180	17	0	698
07:45	86	37	6	0	23	153	93	0	65	86	30	0	7	186	41	0	813
Total	285	130	22	0	63	439	258	0	217	224	145	0	24	615	104	0	2526
08:00	74	34	8	0	13	101	78	0	59	63	23	0	8	127	39	0	627
08:15	73	39	6	0	9	85	55	0	52	60	29	0	6	146	42	0	602
08:30	83	36	8	0	9	96	80	0	51	71	47	0	6	145	46	0	678
08:45	89	31	4	0	16	90	67	0	41	56	107	0	6	181	34	0	722
Total	319	140	26	0	47	372	280	0	203	250	206	0	26	599	161	0	2629
*** BREAK ***																	
16:00	83	59	3	0	43	184	105	0	39	40	23	0	9	144	44	0	776
16:15	72	44	9	0	37	127	64	0	48	61	16	0	9	153	49	0	689
16:30	95	73	4	0	61	156	79	0	67	51	23	0	5	110	48	0	772
16:45	108	65	5	0	35	169	96	0	70	42	36	0	7	168	63	0	864
Total	358	241	21	0	176	636	344	0	224	194	98	0	30	575	204	0	3101
17:00	111	70	7	0	56	161	89	0	59	58	28	0	9	159	51	0	858
17:15	118	68	5	0	75	196	94	0	38	40	32	0	9	166	62	0	903
17:30	115	63	7	0	38	131	79	0	63	53	31	0	12	145	43	0	780
17:45	102	74	5	0	40	171	82	0	58	42	27	0	8	150	61	0	820
Total	446	275	24	0	209	659	344	0	218	193	118	0	38	620	217	0	3361
Grand Total	1408	786	93	0	495	2106	1226	0	862	861	567	0	118	2409	686	0	11617
Apprch %	61.6	34.4	4.1	0	12.9	55	32	0	37.6	37.6	24.8	0	3.7	75	21.4	0	
Total %	12.1	6.8	0.8	0	4.3	18.1	10.6	0	7.4	7.4	4.9	0	1	20.7	5.9	0	

True Count

6520 Lemarand Ave
San Diego, CA 92115

File Name : 20.NAPA ST.LINDA VISTA RD
Site Code : 00000000
Start Date : 2/5/2013
Page No : 2

	NAPA ST Southbound					LINDA VISTA RD Westbound					NAPA ST Northbound					LINDA VISTA RD Eastbound					
Start Time	**Left**	**Thru**	**Right**	**Peds**	**App. Total**	**Left**	**Thru**	**Right**	**Peds**	**App. Total**	**Left**	**Thru**	**Right**	**Peds**	**App. Total**	**Left**	**Thru**	**Right**	**Peds**	**App. Total**	**Int. Total**
Peak Hour Analysis From 07:00 to 11:45 - Peak 1 of 1																					
Peak Hour for Entire Intersection Begins at 07:30																					
07:30	89	30	6	0	125	16	112	55	0	183	56	63	68	0	187	6	180	17	0	203	698
07:45	86	37	6	0	129	23	153	93	0	269	65	86	30	0	181	7	186	41	0	234	813
08:00	74	34	8	0	116	13	101	78	0	192	59	63	23	0	145	8	127	39	0	174	627
08:15	73	39	6	0	118	9	85	55	0	149	52	60	29	0	141	6	146	42	0	194	602
Total Volume	322	140	26	0	488	61	451	281	0	793	232	272	150	0	654	27	639	139	0	805	2740
% App. Total	66	28.7	5.3	0		7.7	56.9	35.4	0		35.5	41.6	22.9	0		3.4	79.4	17.3	0		
PHF	.904	.897	.813	.000	.946	.663	.737	.755	.000	.737	.892	.791	.551	.000	.874	.844	.859	.827	.000	.860	.843

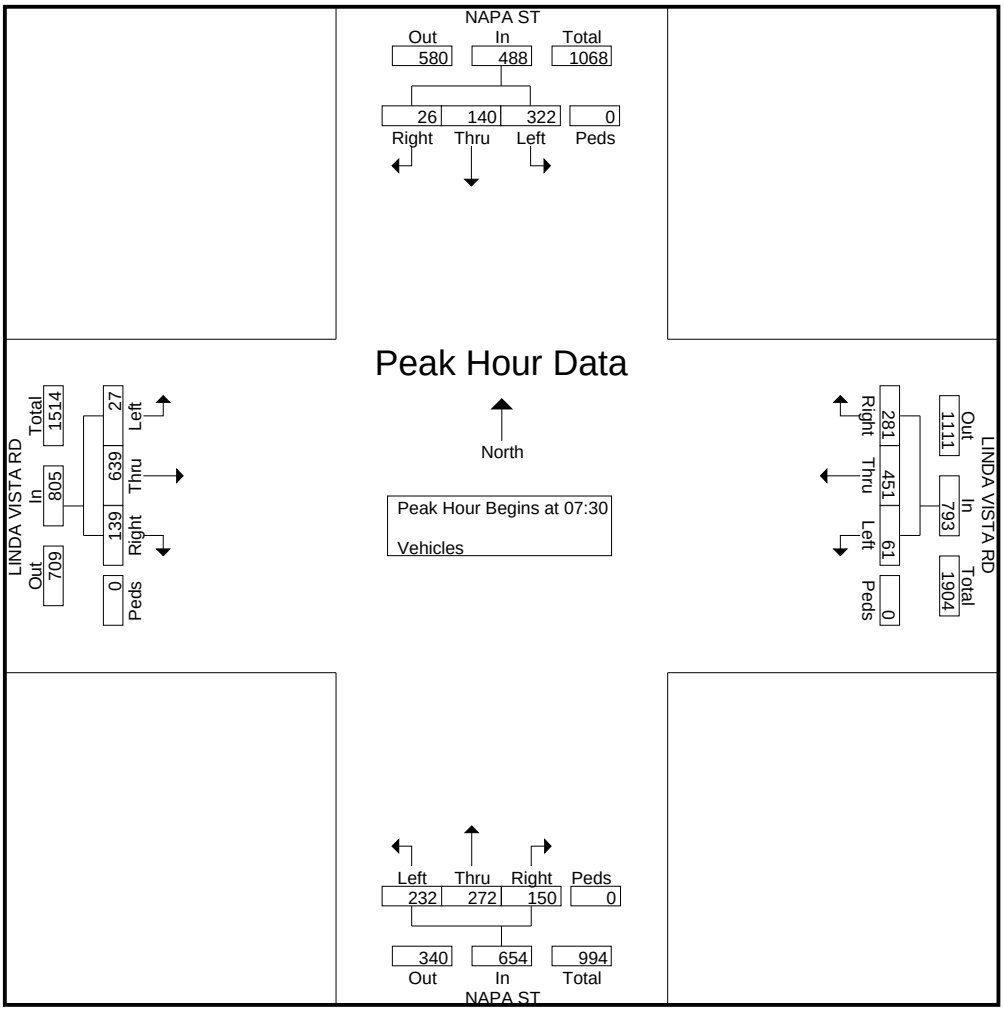

True Count

6520 Lemarand Ave
San Diego, CA 92115

File Name : 20.NAPA ST.LINDA VISTA RD
Site Code : 00000000
Start Date : 2/5/2013
Page No : 3

	NAPA ST Southbound					LINDA VISTA RD Westbound					NAPA ST Northbound					LINDA VISTA RD Eastbound					
Start Time	**Left**	**Thru**	**Right**	**Peds**	**App. Total**	**Left**	**Thru**	**Right**	**Peds**	**App. Total**	**Left**	**Thru**	**Right**	**Peds**	**App. Total**	**Left**	**Thru**	**Right**	**Peds**	**App. Total**	**Int. Total**
Peak Hour Analysis From 12:00 to 17:45 - Peak 1 of 1																					
Peak Hour for Entire Intersection Begins at 16:45																					
16:45	108	65	5	0	178	35	169	96	0	300	70	42	36	0	148	7	168	63	0	238	864
17:00	111	70	7	0	188	56	161	89	0	306	59	58	28	0	145	9	159	51	0	219	858
17:15	118	68	5	0	191	75	196	94	0	365	38	40	32	0	110	9	166	62	0	237	903
17:30	115	63	7	0	185	38	131	79	0	248	63	53	31	0	147	12	145	43	0	200	780
Total Volume	452	266	24	0	742	204	657	358	0	1219	230	193	127	0	550	37	638	219	0	894	3405
% App. Total	60.9	35.8	3.2	0		16.7	53.9	29.4	0		41.8	35.1	23.1	0		4.1	71.4	24.5	0		
PHF	.958	.950	.857	.000	.971	.680	.838	.932	.000	.835	.821	.832	.882	.000	.929	.771	.949	.869	.000	.939	.943

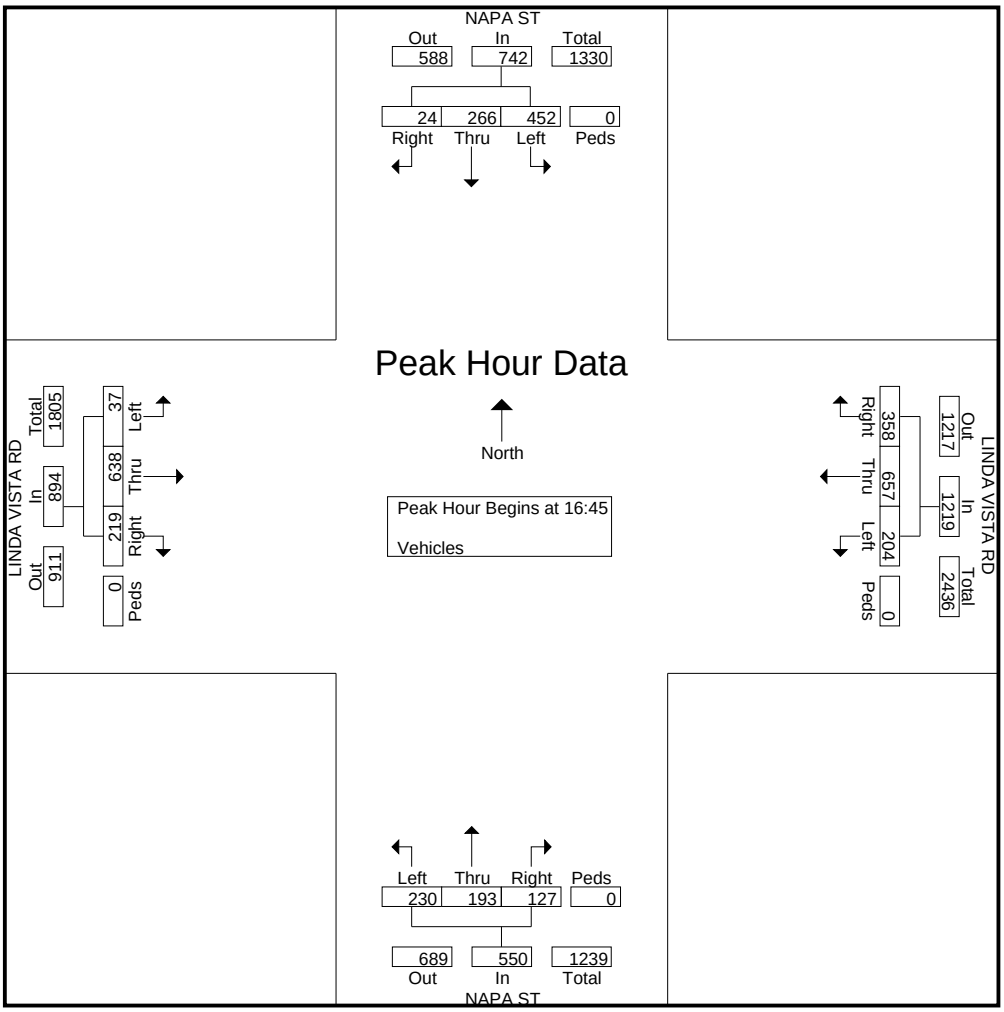

True Count

6520 Lemarand Ave
San Diego, CA 92115

File Name : 21.MARIAN WAY.LINDA VISTA RD
Site Code : 00000000
Start Date : 2/5/2013
Page No : 1

Groups Printed- Vehicles

	MARIAN WY Southbound				LINDA VISTA RD Westbound				MARIAN WY Northbound				LINDA VISTA RD Eastbound				
Start Time	Left	Thru	Right	Peds	Left	Thru	Right	Peds	Left	Thru	Right	Peds	Left	Thru	Right	Peds	Int. Total
07:00	1	1	18	0	0	137	8	0	13	1	1	0	43	105	11	0	339
07:15	2	0	12	0	0	117	12	0	21	3	2	0	114	137	5	0	425
07:30	3	0	13	0	2	168	17	0	25	9	1	0	154	199	8	0	599
07:45	1	0	10	0	1	241	9	0	31	2	0	0	107	174	7	0	583
Total	7	1	53	0	3	663	46	0	90	15	4	0	418	615	31	0	1946
08:00	4	0	9	0	1	142	7	0	18	2	0	0	64	136	10	0	393
08:15	1	0	10	0	0	133	8	0	27	7	0	0	71	143	13	0	413
08:30	3	1	16	0	0	149	19	0	23	3	0	0	107	148	10	0	479
08:45	6	3	17	0	3	111	67	0	18	27	1	0	160	179	16	0	608
Total	14	4	52	0	4	535	101	0	86	39	1	0	402	606	49	0	1893
*** BREAK ***																	
16:00	47	5	153	0	0	204	6	0	22	0	4	0	19	162	34	0	656
16:15	9	2	59	0	3	214	3	0	21	1	6	0	31	181	29	0	559
16:30	13	3	62	0	1	157	3	0	16	1	5	0	30	159	20	0	470
16:45	18	3	94	0	1	179	7	0	18	1	3	0	38	205	24	0	591
Total	87	13	368	0	5	754	19	0	77	3	18	0	118	707	107	0	2276
17:00	24	5	67	0	2	183	6	0	14	1	2	0	82	211	30	0	627
17:15	36	7	117	0	0	217	20	0	19	2	3	0	69	221	21	0	732
17:30	44	6	168	0	2	194	9	0	17	3	2	0	67	187	19	0	718
17:45	16	1	39	0	3	179	12	0	8	0	1	0	69	186	7	0	521
Total	120	19	391	0	7	773	47	0	58	6	8	0	287	805	77	0	2598
Grand Total	228	37	864	0	19	2725	213	0	311	63	31	0	1225	2733	264	0	8713
Apprch %	20.2	3.3	76.5	0	0.6	92.2	7.2	0	76.8	15.6	7.7	0	29	64.7	6.3	0	
Total %	2.6	0.4	9.9	0	0.2	31.3	2.4	0	3.6	0.7	0.4	0	14.1	31.4	3	0	

True Count

6520 Lemarand Ave
San Diego, CA 92115

File Name : 21.MARIAN WAY.LINDA VISTA RD
Site Code : 00000000
Start Date : 2/5/2013
Page No : 2

	MARIAN WY Southbound					LINDA VISTA RD Westbound					MARIAN WY Northbound					LINDA VISTA RD Eastbound					
Start Time	Left	Thru	Right	Peds	App. Total	Left	Thru	Right	Peds	App. Total	Left	Thru	Right	Peds	App. Total	Left	Thru	Right	Peds	App. Total	Int. Total
Peak Hour Analysis From 07:00 to 11:45 - Peak 1 of 1																					
Peak Hour for Entire Intersection Begins at 07:15																					
07:15	2	0	12	0	14	0	117	12	0	129	21	3	2	0	26	114	137	5	0	256	425
07:30	3	0	13	0	16	2	168	17	0	187	25	9	1	0	35	154	199	8	0	361	599
07:45	1	0	10	0	11	1	241	9	0	251	31	2	0	0	33	107	174	7	0	288	583
08:00	4	0	9	0	13	1	142	7	0	150	18	2	0	0	20	64	136	10	0	210	393
Total Volume	10	0	44	0	54	4	668	45	0	717	95	16	3	0	114	439	646	30	0	1115	2000
% App. Total	18.5	0	81.5	0		0.6	93.2	6.3	0		83.3	14	2.6	0		39.4	57.9	2.7	0		
PHF	.625	.000	.846	.000	.844	.500	.693	.662	.000	.714	.766	.444	.375	.000	.814	.713	.812	.750	.000	.772	.835

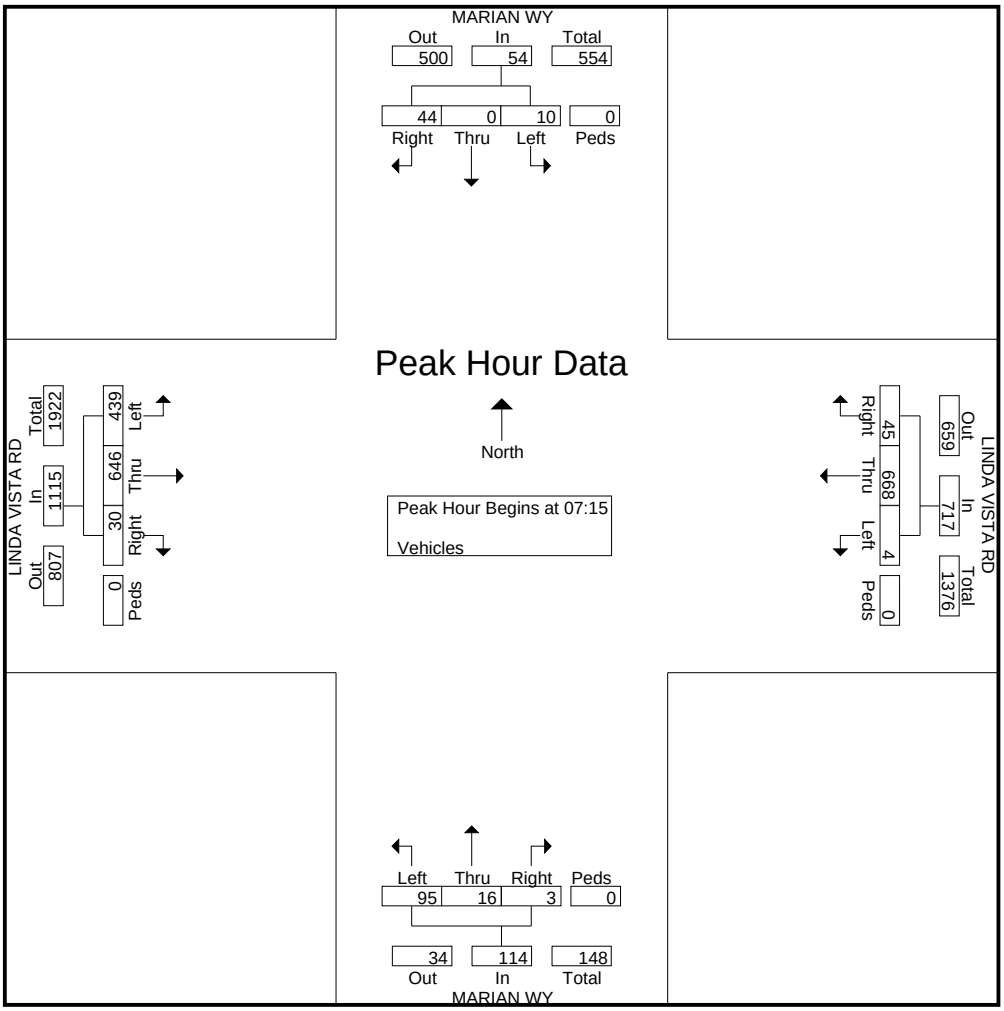

True Count

6520 Lemarand Ave
San Diego, CA 92115

File Name : 21.MARIAN WAY.LINDA VISTA RD
Site Code : 00000000
Start Date : 2/5/2013
Page No : 3

	MARIAN WY Southbound					LINDA VISTA RD Westbound					MARIAN WY Northbound					LINDA VISTA RD Eastbound					
Start Time	**Left**	**Thru**	**Right**	**Peds**	**App. Total**	**Left**	**Thru**	**Right**	**Peds**	**App. Total**	**Left**	**Thru**	**Right**	**Peds**	**App. Total**	**Left**	**Thru**	**Right**	**Peds**	**App. Total**	**Int. Total**
Peak Hour Analysis From 12:00 to 17:45 - Peak 1 of 1																					
Peak Hour for Entire Intersection Begins at 16:45																					
16:45	18	3	94	0	115	1	179	7	0	187	18	1	3	0	22	38	205	24	0	267	591
17:00	24	5	67	0	96	2	183	6	0	191	14	1	2	0	17	82	211	30	0	323	627
17:15	36	7	117	0	160	0	217	20	0	237	19	2	3	0	24	69	221	21	0	311	732
17:30	44	6	168	0	218	2	194	9	0	205	17	3	2	0	22	67	187	19	0	273	718
Total Volume	122	21	446	0	589	5	773	42	0	820	68	7	10	0	85	256	824	94	0	1174	2668
% App. Total	20.7	3.6	75.7	0		0.6	94.3	5.1	0		80	8.2	11.8	0		21.8	70.2	8	0		
PHF	.693	.750	.664	.000	.675	.625	.891	.525	.000	.865	.895	.583	.833	.000	.885	.780	.932	.783	.000	.909	.911

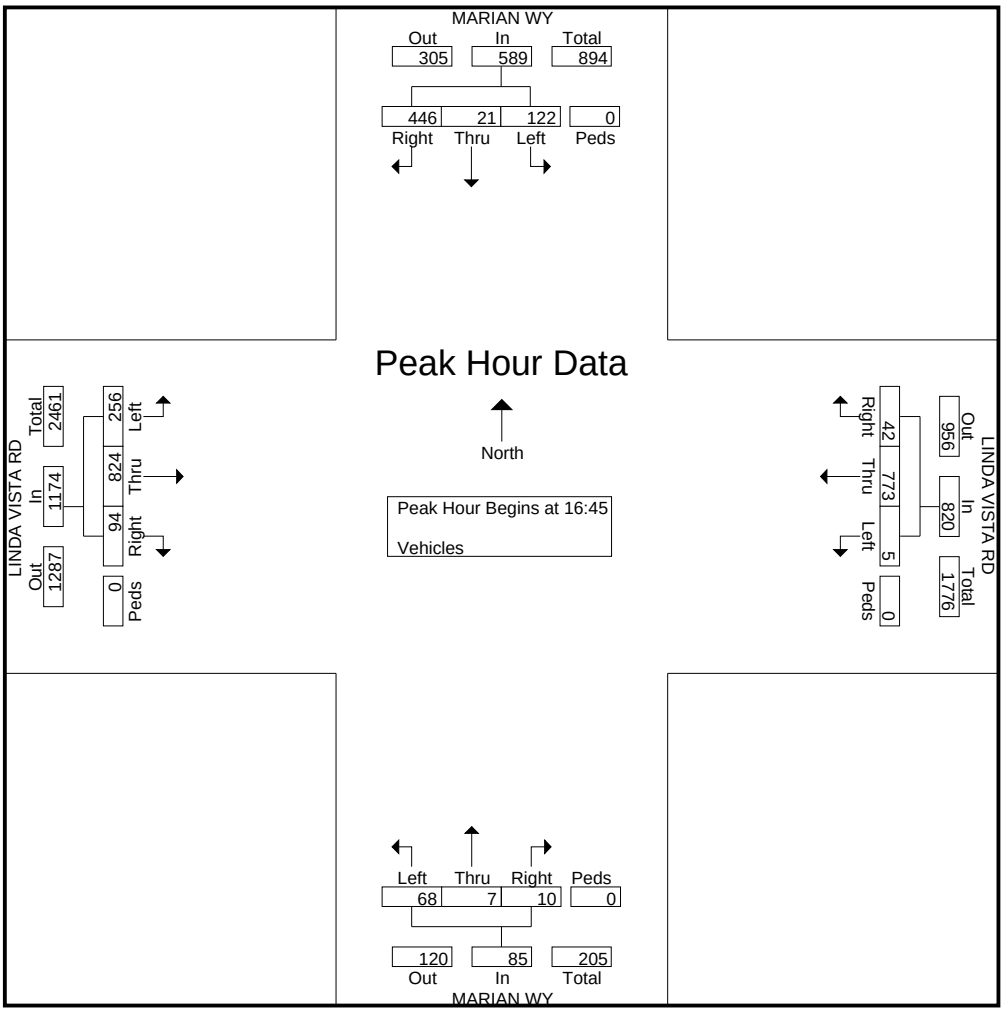

True Count

6520 Lemarand Ave
San Diego, CA 92115

File Name : 22.NAPA ST.RILEY ST
Site Code : 00000000
Start Date : 2/5/2013
Page No : 1

Groups Printed- Vehicles

	NAPA ST Southbound				RILEY ST Westbound				NAPA ST Northbound				RILEY ST Eastbound				
Start Time	Left	Thru	Right	Peds	Left	Thru	Right	Peds	Left	Thru	Right	Peds	Left	Thru	Right	Peds	Int. Total
07:00	6	27	16	0	1	3	12	0	8	72	3	0	14	1	9	0	172
07:15	11	50	21	0	0	2	4	0	14	103	7	0	19	1	7	0	239
07:30	8	35	17	0	2	0	5	0	7	163	15	0	26	5	6	0	289
07:45	13	62	29	0	1	2	8	0	10	159	14	0	21	2	11	0	332
Total	38	174	83	0	4	7	29	0	39	497	39	0	80	9	33	0	1032
08:00	10	59	15	0	2	3	2	0	9	113	9	0	26	1	7	0	256
08:15	8	58	21	0	0	1	5	0	12	119	7	0	30	1	5	0	267
08:30	17	59	13	0	1	1	3	0	19	156	5	0	14	4	9	0	301
08:45	18	51	20	0	0	1	6	0	14	167	22	0	29	6	7	0	341
Total	53	227	69	0	3	6	16	0	54	555	43	0	99	12	28	0	1165
*** BREAK ***																	
16:00	10	128	30	0	20	2	8	0	10	94	3	0	34	5	16	0	360
16:15	14	79	29	0	6	4	10	0	6	67	3	0	18	4	9	0	249
16:30	12	132	28	0	6	2	11	0	8	96	4	0	26	2	9	0	336
16:45	9	138	36	0	5	2	13	0	15	100	4	0	22	1	18	0	363
Total	45	477	123	0	37	10	42	0	39	357	14	0	100	12	52	0	1308
17:00	9	128	22	0	3	3	15	0	16	122	6	0	24	5	13	0	366
17:15	13	145	33	0	8	5	7	0	8	95	11	0	31	3	21	0	380
17:30	13	141	28	0	38	5	18	0	8	90	7	0	17	3	12	0	380
17:45	21	129	16	0	6	3	10	0	15	96	7	0	24	8	24	0	359
Total	56	543	99	0	55	16	50	0	47	403	31	0	96	19	70	0	1485
Grand Total	192	1421	374	0	99	39	137	0	179	1812	127	0	375	52	183	0	4990
Apprch %	9.7	71.5	18.8	0	36	14.2	49.8	0	8.5	85.6	6	0	61.5	8.5	30	0	
Total %	3.8	28.5	7.5	0	2	0.8	2.7	0	3.6	36.3	2.5	0	7.5	1	3.7	0	

True Count

6520 Lemarand Ave
San Diego, CA 92115

File Name : 22.NAPA ST.RILEY ST
Site Code : 00000000
Start Date : 2/5/2013
Page No : 2

	NAPA ST Southbound					RILEY ST Westbound					NAPA ST Northbound					RILEY ST Eastbound					
Start Time	**Left**	**Thru**	**Right**	**Peds**	**App. Total**	**Left**	**Thru**	**Right**	**Peds**	**App. Total**	**Left**	**Thru**	**Right**	**Peds**	**App. Total**	**Left**	**Thru**	**Right**	**Peds**	**App. Total**	**Int. Total**
Peak Hour Analysis From 07:00 to 11:45 - Peak 1 of 1																					
Peak Hour for Entire Intersection Begins at 08:00																					
08:00	10	59	15	0	84	2	3	2	0	7	9	113	9	0	131	26	1	7	0	34	256
08:15	8	58	21	0	87	0	1	5	0	6	12	119	7	0	138	30	1	5	0	36	267
08:30	17	59	13	0	89	1	1	3	0	5	19	156	5	0	180	14	4	9	0	27	301
08:45	18	51	20	0	89	0	1	6	0	7	14	167	22	0	203	29	6	7	0	42	341
Total Volume	53	227	69	0	349	3	6	16	0	25	54	555	43	0	652	99	12	28	0	139	1165
% App. Total	15.2	65	19.8	0		12	24	64	0		8.3	85.1	6.6	0		71.2	8.6	20.1	0		
PHF	.736	.962	.821	.000	.980	.375	.500	.667	.000	.893	.711	.831	.489	.000	.803	.825	.500	.778	.000	.827	.854

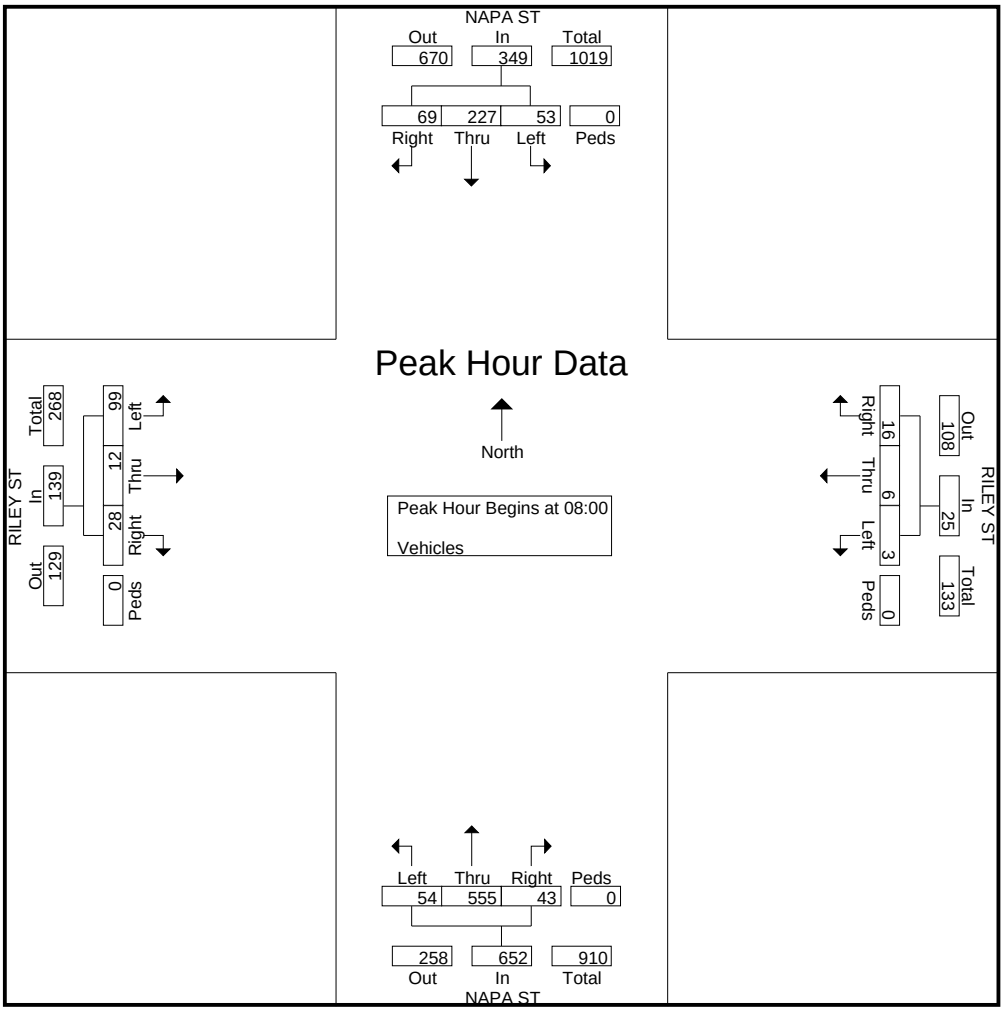

True Count

6520 Lemarand Ave
San Diego, CA 92115

File Name : 22.NAPA ST.RILEY ST
Site Code : 00000000
Start Date : 2/5/2013
Page No : 3

	NAPA ST Southbound					RILEY ST Westbound					NAPA ST Northbound					RILEY ST Eastbound					
Start Time	Left	Thru	Right	Peds	App. Total	Left	Thru	Right	Peds	App. Total	Left	Thru	Right	Peds	App. Total	Left	Thru	Right	Peds	App. Total	Int. Total
Peak Hour Analysis From 12:00 to 17:45 - Peak 1 of 1																					
Peak Hour for Entire Intersection Begins at 16:45																					
16:45	9	138	36	0	183	5	2	13	0	20	15	100	4	0	119	22	1	18	0	41	363
17:00	9	128	22	0	159	3	3	15	0	21	16	122	6	0	144	24	5	13	0	42	366
17:15	13	145	33	0	191	8	5	7	0	20	8	95	11	0	114	31	3	21	0	55	380
17:30	13	141	28	0	182	38	5	18	0	61	8	90	7	0	105	17	3	12	0	32	380
Total Volume	44	552	119	0	715	54	15	53	0	122	47	407	28	0	482	94	12	64	0	170	1489
% App. Total	6.2	77.2	16.6	0		44.3	12.3	43.4	0		9.8	84.4	5.8	0		55.3	7.1	37.6	0		
PHF	.846	.952	.826	.000	.936	.355	.750	.736	.000	.500	.734	.834	.636	.000	.837	.758	.600	.762	.000	.773	.980

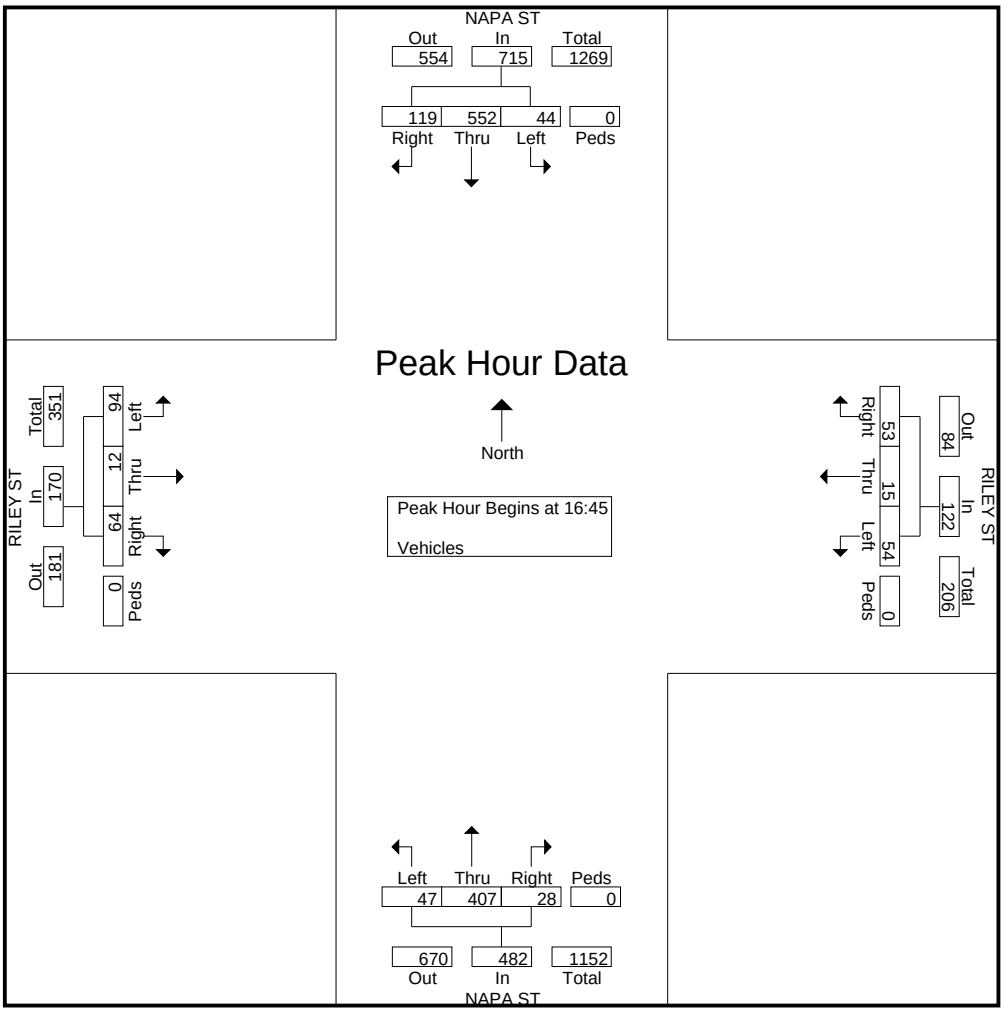

True Count

6520 Lemarand Ave
San Diego, CA 92115

File Name : 23.NAPA ST.FRIARS RD
Site Code : 00000000
Start Date : 2/5/2013
Page No : 1

Groups Printed- Vehicles

	NAPA ST Southbound				FRIARS RD Westbound				Northbound				FRIARS RD Eastbound				
Start Time	Left	Thru	Right	Peds	Left	Thru	Right	Peds	Left	Thru	Right	Peds	Left	Thru	Right	Peds	Int. Total
07:00	25	0	4	0	0	54	60	0	0	0	0	0	21	38	0	0	202
07:15	42	0	12	0	0	72	69	0	0	0	0	0	69	62	0	0	326
07:30	34	0	13	0	0	93	99	0	0	0	0	0	78	90	0	0	407
07:45	39	0	11	0	0	75	140	0	0	0	0	0	44	113	0	0	422
Total	140	0	40	0	0	294	368	0	0	0	0	0	212	303	0	0	1357
08:00	52	0	13	0	0	80	88	0	0	0	0	0	33	60	0	0	326
08:15	54	0	4	0	0	72	88	0	0	0	0	0	39	57	0	0	314
08:30	50	0	5	0	0	56	99	0	0	0	0	0	81	80	0	0	371
08:45	36	0	13	0	0	77	72	0	0	0	0	0	132	143	0	0	473
Total	192	0	35	0	0	285	347	0	0	0	0	0	285	340	0	0	1484
*** BREAK ***																	
16:00	102	0	52	0	0	77	62	0	0	0	0	0	20	121	0	0	434
16:15	68	0	30	0	0	74	50	0	0	0	0	0	19	117	0	0	358
16:30	82	0	37	0	0	80	72	0	0	0	0	0	38	127	0	0	436
16:45	123	0	36	0	0	61	72	0	0	0	0	0	40	171	0	0	503
Total	375	0	155	0	0	292	256	0	0	0	0	0	117	536	0	0	1731
17:00	108	0	31	0	0	95	82	0	0	0	0	0	42	156	0	0	514
17:15	130	0	54	0	0	91	69	0	0	0	0	0	34	182	0	0	560
17:30	99	0	100	0	0	95	68	0	0	0	0	0	33	154	0	0	549
17:45	114	0	45	0	0	78	67	0	0	0	0	0	38	151	0	0	493
Total	451	0	230	0	0	359	286	0	0	0	0	0	147	643	0	0	2116
Grand Total	1158	0	460	0	0	1230	1257	0	0	0	0	0	761	1822	0	0	6688
Apprch %	71.6	0	28.4	0	0	49.5	50.5	0	0	0	0	0	29.5	70.5	0	0	
Total %	17.3	0	6.9	0	0	18.4	18.8	0	0	0	0	0	11.4	27.2	0	0	

True Count

6520 Lemarand Ave
San Diego, CA 92115

File Name : 23.NAPA ST.FRIARS RD
Site Code : 00000000
Start Date : 2/5/2013
Page No : 2

	NAPA ST Southbound					FRIARS RD Westbound					Northbound					FRIARS RD Eastbound					
Start Time	**Left**	**Thru**	**Right**	**Peds**	**App. Total**	**Left**	**Thru**	**Right**	**Peds**	**App. Total**	**Left**	**Thru**	**Right**	**Peds**	**App. Total**	**Left**	**Thru**	**Right**	**Peds**	**App. Total**	**Int. Total**
Peak Hour Analysis From 07:00 to 11:45 - Peak 1 of 1																					
Peak Hour for Entire Intersection Begins at 08:00																					
08:00	52	0	13	0	65	0	80	88	0	168	0	0	0	0	0	33	60	0	0	93	326
08:15	54	0	4	0	58	0	72	88	0	160	0	0	0	0	0	39	57	0	0	96	314
08:30	50	0	5	0	55	0	56	99	0	155	0	0	0	0	0	81	80	0	0	161	371
08:45	36	0	13	0	49	0	77	72	0	149	0	0	0	0	0	132	143	0	0	275	473
Total Volume	192	0	35	0	227	0	285	347	0	632	0	0	0	0	0	285	340	0	0	625	1484
% App. Total	84.6	0	15.4	0		0	45.1	54.9	0		0	0	0	0		45.6	54.4	0	0		
PHF	.889	.000	.673	.000	.873	.000	.891	.876	.000	.940	.000	.000	.000	.000	.000	.540	.594	.000	.000	.568	.784

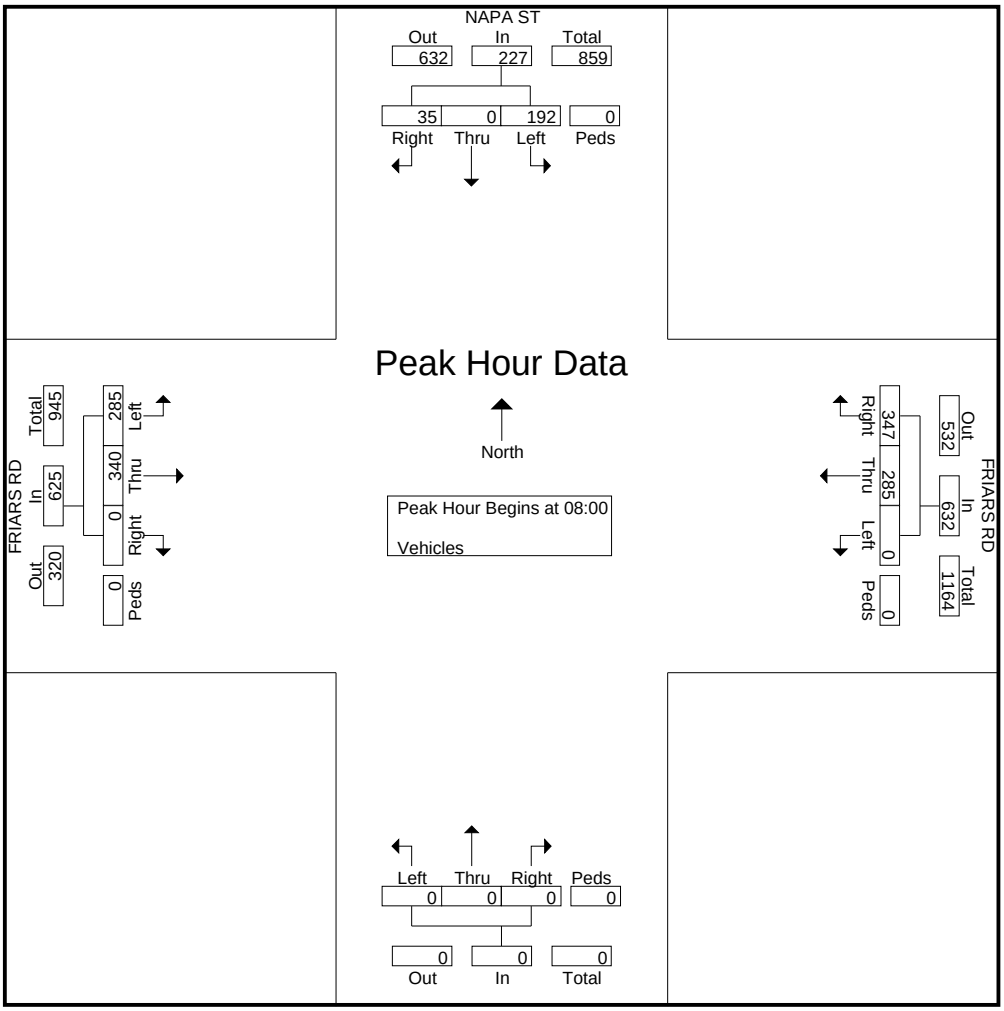

True Count

6520 Lemarand Ave
San Diego, CA 92115

File Name : 23.NAPA ST.FRIARS RD
Site Code : 00000000
Start Date : 2/5/2013
Page No : 3

	NAPA ST Southbound					FRIARS RD Westbound					Northbound					FRIARS RD Eastbound					
Start Time	**Left**	**Thru**	**Right**	**Peds**	**App. Total**	**Left**	**Thru**	**Right**	**Peds**	**App. Total**	**Left**	**Thru**	**Right**	**Peds**	**App. Total**	**Left**	**Thru**	**Right**	**Peds**	**App. Total**	**Int. Total**
Peak Hour Analysis From 12:00 to 17:45 - Peak 1 of 1																					
Peak Hour for Entire Intersection Begins at 16:45																					
16:45	123	0	36	0	159	0	61	72	0	133	0	0	0	0	0	40	171	0	0	211	503
17:00	108	0	31	0	139	0	95	82	0	177	0	0	0	0	0	42	156	0	0	198	514
17:15	130	0	54	0	184	0	91	69	0	160	0	0	0	0	0	34	182	0	0	216	560
17:30	99	0	100	0	199	0	95	68	0	163	0	0	0	0	0	33	154	0	0	187	549
Total Volume	460	0	221	0	681	0	342	291	0	633	0	0	0	0	0	149	663	0	0	812	2126
% App. Total	67.5	0	32.5	0		0	54	46	0		0	0	0	0		18.3	81.7	0	0		
PHF	.885	.000	.553	.000	.856	.000	.900	.887	.000	.894	.000	.000	.000	.000	.000	.887	.911	.000	.000	.940	.949

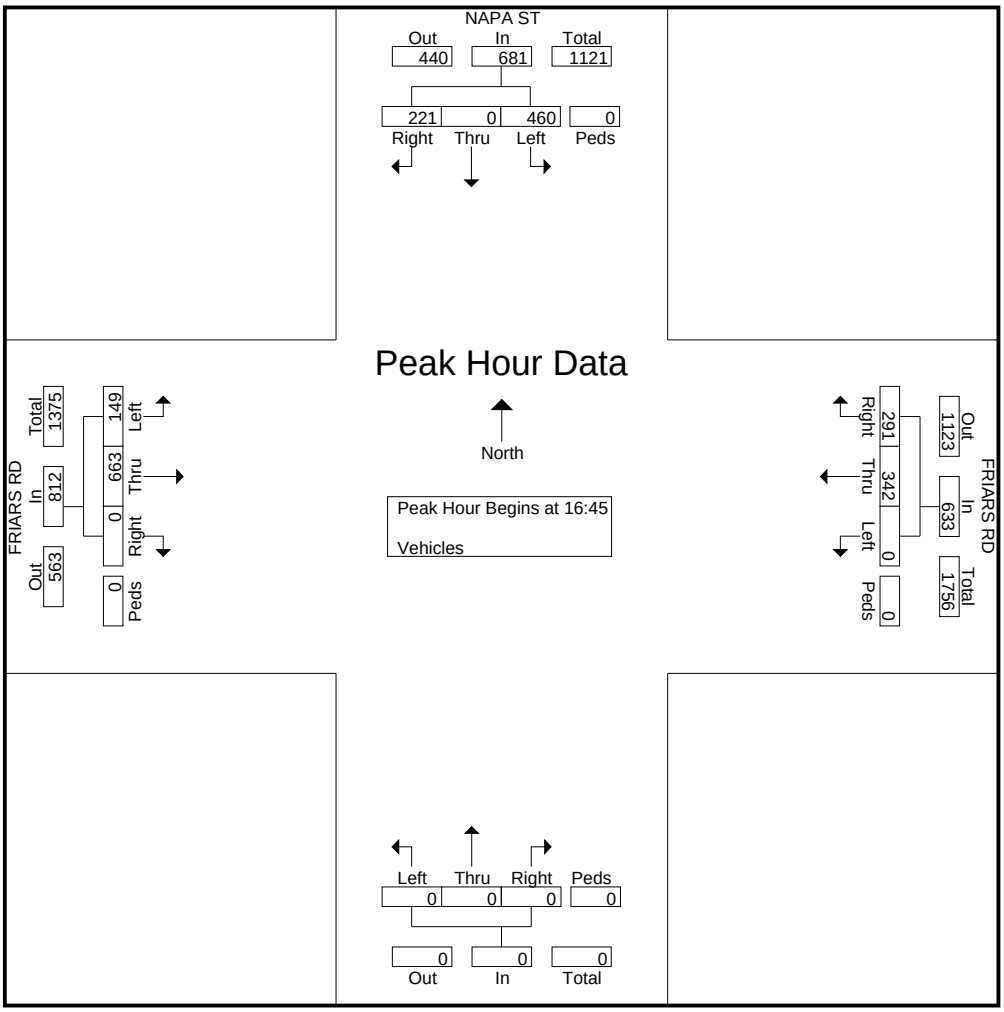

True Count

6520 Lemarand Ave
San Diego, CA 92115

File Name : 24.COLUSA ST.FRIARS RD
Site Code : 00000000
Start Date : 2/5/2013
Page No : 1

Groups Printed- Vehicles

	COLUSA ST Southbound				FRIARS RD Westbound				COLUSA ST Northbound				FRIARS RD Eastbound				
Start Time	Left	Thru	Right	Peds	Left	Thru	Right	Peds	Left	Thru	Right	Peds	Left	Thru	Right	Peds	Int. Total
07:00	5	0	8	0	1	89	5	0	10	1	9	0	1	54	2	0	185
07:15	16	0	10	0	3	110	7	0	10	0	10	0	3	70	3	0	242
07:30	18	1	11	0	1	169	10	0	10	0	11	0	6	109	1	0	347
07:45	20	0	7	0	1	198	11	0	12	1	19	0	11	131	0	0	411
Total	59	1	36	0	6	566	33	0	42	2	49	0	21	364	6	0	1185
08:00	7	2	7	0	5	159	14	0	10	0	6	0	15	91	1	0	317
08:15	15	1	9	0	1	168	17	0	8	2	12	0	13	74	3	0	323
08:30	21	0	15	0	4	124	19	0	17	2	9	0	7	88	2	0	308
08:45	12	1	11	0	1	123	14	0	6	2	15	0	21	120	3	0	329
Total	55	4	42	0	11	574	64	0	41	6	42	0	56	373	9	0	1277
*** BREAK ***																	
16:00	26	4	12	0	9	116	11	0	5	0	6	0	6	161	4	0	360
16:15	21	0	8	0	4	119	9	0	2	1	7	0	10	194	5	0	380
16:30	21	4	5	0	2	138	9	0	3	0	8	0	5	161	7	0	363
16:45	22	1	15	0	11	114	9	0	1	0	3	0	14	245	11	0	446
Total	90	9	40	0	26	487	38	0	11	1	24	0	35	761	27	0	1549
17:00	24	1	10	0	12	139	13	0	11	2	7	0	14	205	8	0	446
17:15	28	3	10	0	6	133	18	0	6	1	8	0	16	254	7	0	490
17:30	28	2	15	0	9	137	9	0	6	1	6	0	12	227	9	0	461
17:45	12	2	7	0	13	132	13	0	1	0	8	0	17	215	14	0	434
Total	92	8	42	0	40	541	53	0	24	4	29	0	59	901	38	0	1831
Grand Total	296	22	160	0	83	2168	188	0	118	13	144	0	171	2399	80	0	5842
Apprch %	61.9	4.6	33.5	0	3.4	88.9	7.7	0	42.9	4.7	52.4	0	6.5	90.5	3	0	
Total %	5.1	0.4	2.7	0	1.4	37.1	3.2	0	2	0.2	2.5	0	2.9	41.1	1.4	0	

True Count

6520 Lemarand Ave
San Diego, CA 92115

File Name : 24.COLUSA ST.FRIARS RD
Site Code : 00000000
Start Date : 2/5/2013
Page No : 2

	COLUSA ST Southbound					FRIARS RD Westbound					COLUSA ST Northbound					FRIARS RD Eastbound					
Start Time	**Left**	**Thru**	**Right**	**Peds**	**App. Total**	**Left**	**Thru**	**Right**	**Peds**	**App. Total**	**Left**	**Thru**	**Right**	**Peds**	**App. Total**	**Left**	**Thru**	**Right**	**Peds**	**App. Total**	**Int. Total**
Peak Hour Analysis From 07:00 to 11:45 - Peak 1 of 1																					
Peak Hour for Entire Intersection Begins at 07:30																					
07:30	18	1	11	0	30	1	169	10	0	180	10	0	11	0	21	6	109	1	0	116	347
07:45	20	0	7	0	27	1	198	11	0	210	12	1	19	0	32	11	131	0	0	142	411
08:00	7	2	7	0	16	5	159	14	0	178	10	0	6	0	16	15	91	1	0	107	317
08:15	15	1	9	0	25	1	168	17	0	186	8	2	12	0	22	13	74	3	0	90	323
Total Volume	60	4	34	0	98	8	694	52	0	754	40	3	48	0	91	45	405	5	0	455	1398
% App. Total	61.2	4.1	34.7	0		1.1	92	6.9	0		44	3.3	52.7	0		9.9	89	1.1	0		
PHF	.750	.500	.773	.000	.817	.400	.876	.765	.000	.898	.833	.375	.632	.000	.711	.750	.773	.417	.000	.801	.850

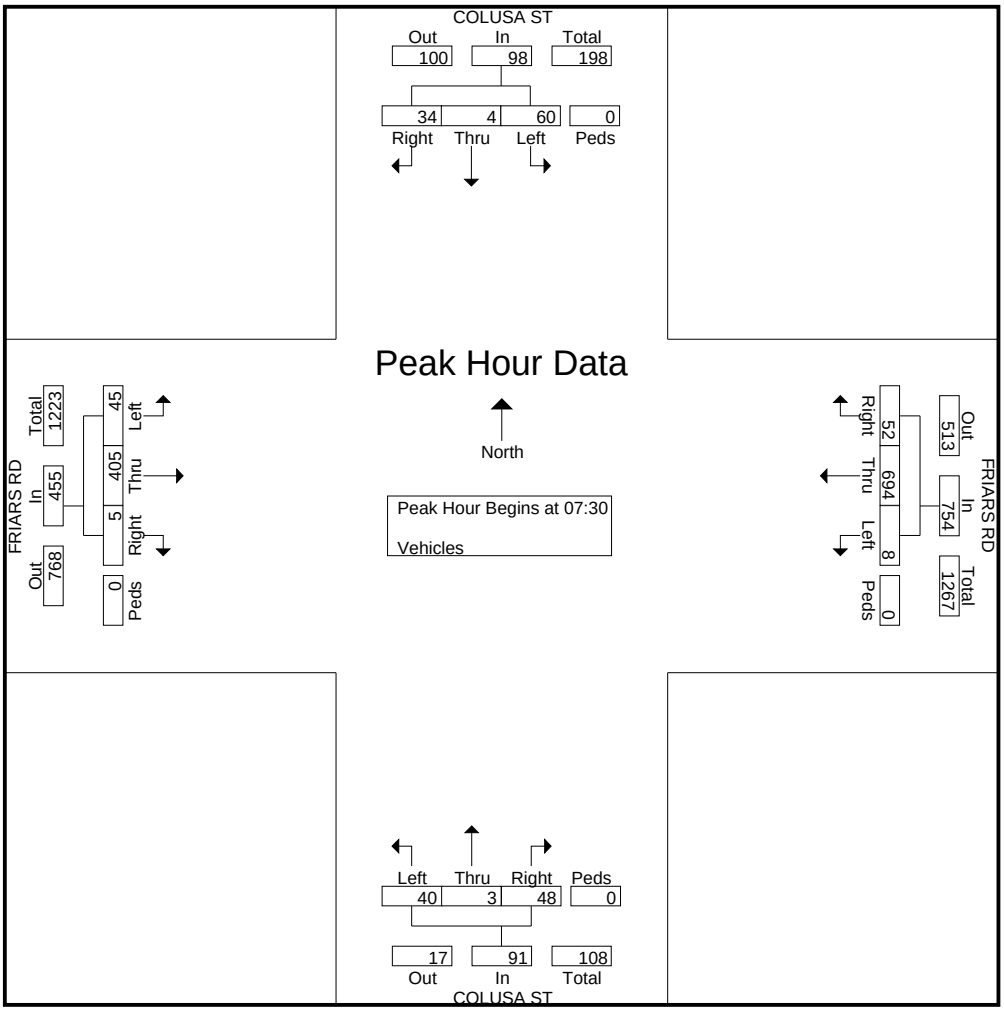

True Count

6520 Lemarand Ave
San Diego, CA 92115

File Name : 24.COLUSA ST.FRIARS RD
Site Code : 00000000
Start Date : 2/5/2013
Page No : 3

	COLUSA ST Southbound					FRIARS RD Westbound					COLUSA ST Northbound					FRIARS RD Eastbound					
Start Time	**Left**	**Thru**	**Right**	**Peds**	**App. Total**	**Left**	**Thru**	**Right**	**Peds**	**App. Total**	**Left**	**Thru**	**Right**	**Peds**	**App. Total**	**Left**	**Thru**	**Right**	**Peds**	**App. Total**	**Int. Total**
Peak Hour Analysis From 12:00 to 17:45 - Peak 1 of 1																					
Peak Hour for Entire Intersection Begins at 16:45																					
16:45	22	1	15	0	38	11	114	9	0	134	1	0	3	0	4	14	245	11	0	270	446
17:00	24	1	10	0	35	12	139	13	0	164	11	2	7	0	20	14	205	8	0	227	446
17:15	28	3	10	0	41	6	133	18	0	157	6	1	8	0	15	16	254	7	0	277	490
17:30	28	2	15	0	45	9	137	9	0	155	6	1	6	0	13	12	227	9	0	248	461
Total Volume	102	7	50	0	159	38	523	49	0	610	24	4	24	0	52	56	931	35	0	1022	1843
% App. Total	64.2	4.4	31.4	0		6.2	85.7	8	0		46.2	7.7	46.2	0		5.5	91.1	3.4	0		
PHF	.911	.583	.833	.000	.883	.792	.941	.681	.000	.930	.545	.500	.750	.000	.650	.875	.916	.795	.000	.922	.940

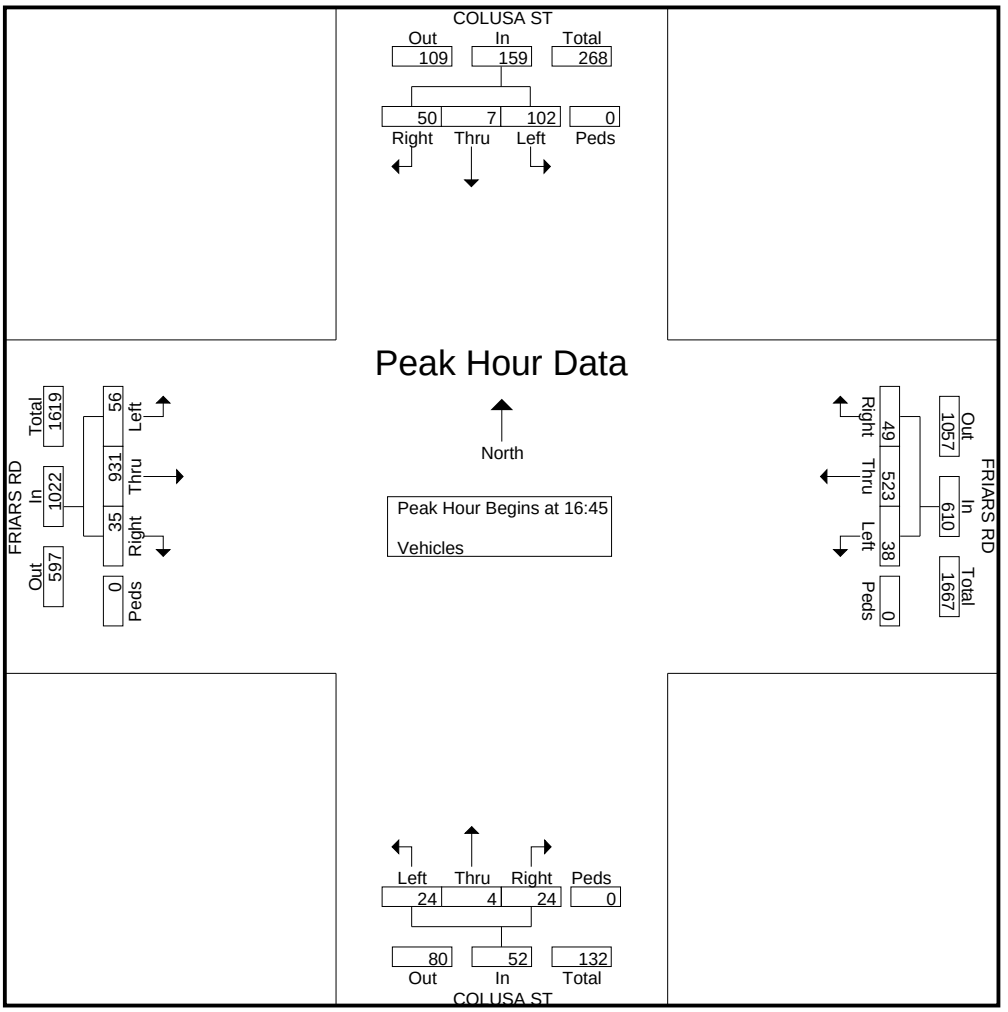

Morena Blvd Station Area Planning Study

Appendix C:

Peak Hour Intersection Counts - Pedestrians and Bicycles

True Count

6520 Lemarand Ave
San Diego, CA 92115

File Name : 01.MORENA BLVD.GESNER ST.PED-BIKE
Site Code : 00000000
Start Date : 2/6/2013
Page No : 1

Groups Printed- Bicycles

	MORENA BLVD Southbound				GESNER ST Westbound				MORENA BLVD Northbound				Eastbound				
Start Time	Left	Thru	Right	Peds	Left	Thru	Right	Peds	Left	Thru	Right	Peds	Left	Thru	Right	Peds	Int. Total
07:00	0	3	0	0	0	0	1	0	0	2	0	0	0	0	0	0	6
07:15	0	0	0	0	0	0	0	0	0	1	0	0	0	0	0	0	1
07:30	0	1	0	0	0	0	1	0	0	2	0	0	0	0	0	0	4
07:45	0	0	0	0	0	0	0	0	0	1	0	0	0	0	0	0	1
Total	0	4	0	0	0	0	2	0	0	6	0	0	0	0	0	0	12
08:00	0	1	0	0	0	0	0	0	0	3	0	0	0	0	0	0	4
*** BREAK ***																	
08:30	0	0	0	0	0	0	0	2	0	0	0	0	0	0	0	0	2
08:45	0	0	0	0	0	0	0	1	0	3	0	0	0	0	0	0	4
Total	0	1	0	0	0	0	0	3	0	6	0	0	0	0	0	0	10
*** BREAK ***																	
16:00	0	1	0	0	0	0	0	0	0	3	0	0	0	0	0	0	4
16:15	0	0	0	0	0	0	0	0	0	1	0	0	0	0	0	0	1
*** BREAK ***																	
16:45	2	0	0	0	0	0	0	1	0	2	0	0	0	0	0	0	5
Total	2	1	0	0	0	0	0	1	0	6	0	0	0	0	0	0	10
17:00	1	1	0	0	0	0	0	0	0	1	0	0	0	0	0	0	3
17:15	0	1	0	0	0	0	0	0	0	2	0	0	0	0	0	0	3
17:30	0	0	0	0	0	0	0	2	0	1	0	0	0	0	0	0	3
17:45	0	1	0	0	0	0	0	0	0	2	0	0	0	0	0	0	3
Total	1	3	0	0	0	0	0	2	0	6	0	0	0	0	0	0	12
Grand Total	3	9	0	0	0	0	2	6	0	24	0	0	0	0	0	0	44
Apprch %	25	75	0	0	0	0	25	75	0	100	0	0	0	0	0	0	
Total %	6.8	20.5	0	0	0	0	4.5	13.6	0	54.5	0	0	0	0	0	0	

True Count

6520 Lemarand Ave
San Diego, CA 92115

File Name : 01.MORENA BLVD.GESNER ST.PED-BIKE
Site Code : 00000000
Start Date : 2/6/2013
Page No : 2

	MORENA BLVD Southbound					GESNER ST Westbound					MORENA BLVD Northbound					Eastbound					
Start Time	**Left**	**Thru**	**Right**	**Peds**	**App. Total**	**Left**	**Thru**	**Right**	**Peds**	**App. Total**	**Left**	**Thru**	**Right**	**Peds**	**App. Total**	**Left**	**Thru**	**Right**	**Peds**	**App. Total**	**Int. Total**
Peak Hour Analysis From 07:00 to 11:45 - Peak 1 of 1																					
Peak Hour for Entire Intersection Begins at 07:00																					
07:00	0	3	0	0	3	0	0	1	0	1	0	2	0	0	2	0	0	0	0	0	6
07:15	0	0	0	0	0	0	0	0	0	0	0	1	0	0	1	0	0	0	0	0	1
07:30	0	1	0	0	1	0	0	1	0	1	0	2	0	0	2	0	0	0	0	0	4
07:45	0	0	0	0	0	0	0	0	0	0	0	1	0	0	1	0	0	0	0	0	1
Total Volume	0	4	0	0	4	0	0	2	0	2	0	6	0	0	6	0	0	0	0	0	12
% App. Total	0	100	0	0		0	0	100	0		0	100	0	0		0	0	0	0		
PHF	.000	.333	.000	.000	.333	.000	.000	.500	.000	.500	.000	.750	.000	.000	.750	.000	.000	.000	.000	.000	.500

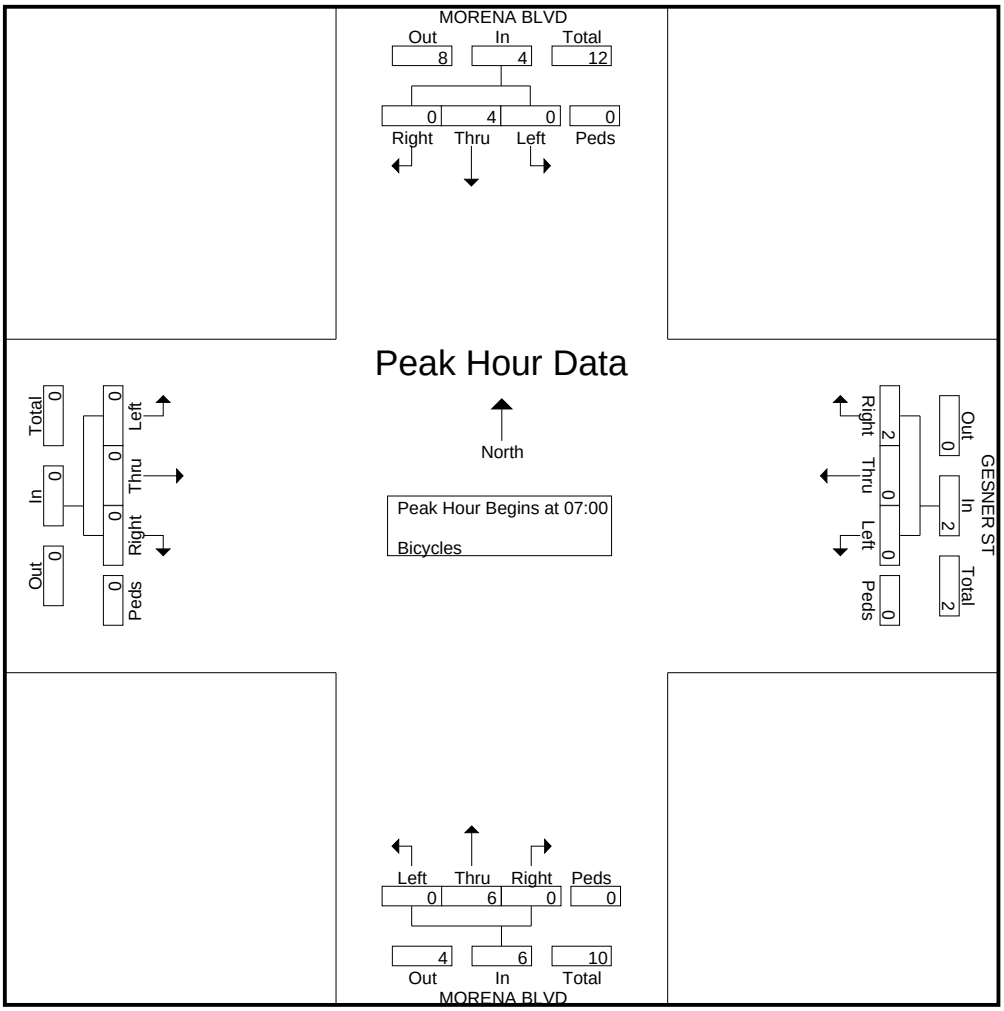

True Count

6520 Lemarand Ave
San Diego, CA 92115

File Name : 01.MORENA BLVD.GESNER ST.PED-BIKE
Site Code : 00000000
Start Date : 2/6/2013
Page No : 3

	MORENA BLVD Southbound					GESNER ST Westbound					MORENA BLVD Northbound					Eastbound					
Start Time	**Left**	**Thru**	**Right**	**Peds**	**App. Total**	**Left**	**Thru**	**Right**	**Peds**	**App. Total**	**Left**	**Thru**	**Right**	**Peds**	**App. Total**	**Left**	**Thru**	**Right**	**Peds**	**App. Total**	**Int. Total**
Peak Hour Analysis From 12:00 to 17:45 - Peak 1 of 1																					
Peak Hour for Entire Intersection Begins at 16:45																					
16:45	2	0	0	0	2	0	0	0	1	1	0	2	0	0	2	0	0	0	0	0	5
17:00	1	1	0	0	2	0	0	0	0	0	0	1	0	0	1	0	0	0	0	0	3
17:15	0	1	0	0	1	0	0	0	0	0	0	2	0	0	2	0	0	0	0	0	3
17:30	0	0	0	0	0	0	0	0	2	2	0	1	0	0	1	0	0	0	0	0	3
Total Volume	3	2	0	0	5	0	0	0	3	3	0	6	0	0	6	0	0	0	0	0	14
% App. Total	60	40	0	0		0	0	0	100		0	100	0	0		0	0	0	0		
PHF	.375	.500	.000	.000	.625	.000	.000	.000	.375	.375	.000	.750	.000	.000	.750	.000	.000	.000	.000	.000	.700

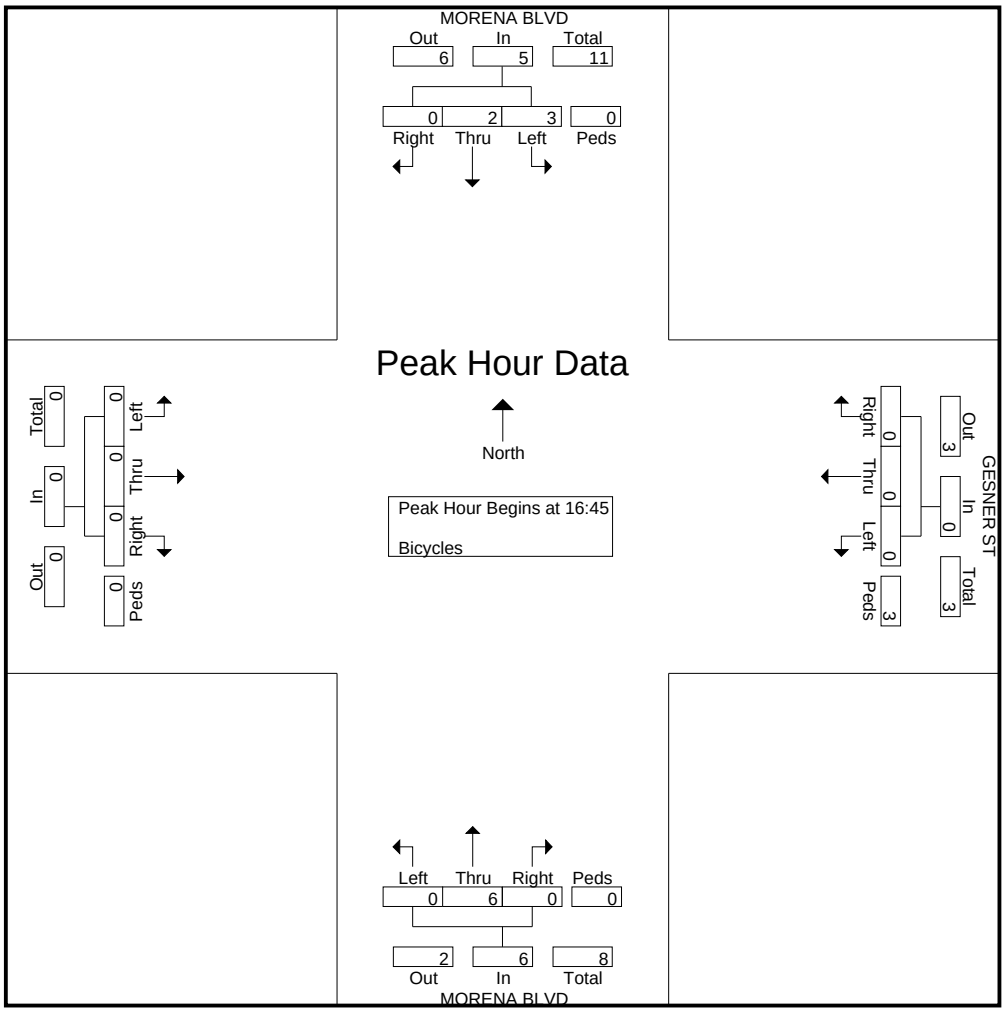

True Count

6520 Lemarand Ave
San Diego, CA 92115

File Name : 02.I-5 NB RAMPS.CLAIREMONT DR.PED-BIKE
Site Code : 00000000
Start Date : 2/13/2013
Page No : 1

Groups Printed- Bicycles

	I-5 NB RAMPS Southbound				CLAIREMONT DR Westbound				I-5 NB RAMPS Northbound				CLAIREMONT DR Eastbound				
Start Time	Left	Thru	Right	Peds	Left	Thru	Right	Peds	Left	Thru	Right	Peds	Left	Thru	Right	Peds	Int. Total
07:00	0	0	0	1	0	0	0	0	0	0	0	0	0	0	0	0	1
07:15	0	0	0	0	0	0	0	0	0	0	0	0	0	2	0	0	2
07:30	0	0	0	1	0	0	0	0	0	0	0	0	0	0	0	0	1
07:45	0	0	0	2	0	0	0	0	0	0	0	0	0	0	0	0	2
Total	0	0	0	4	0	0	0	0	0	0	0	0	0	2	0	0	6
08:00	0	0	0	1	0	1	0	0	0	0	0	1	0	1	0	0	4
08:15	0	0	0	2	0	0	0	0	0	0	0	0	0	0	0	0	2
08:30	0	0	0	0	0	0	0	0	0	0	0	0	0	2	0	0	2
08:45	0	0	0	3	0	0	0	0	0	0	0	0	0	1	0	0	4
Total	0	0	0	6	0	1	0	0	0	0	0	1	0	4	0	0	12
*** BREAK ***																	
16:00	0	0	0	3	0	0	0	0	0	0	0	0	0	4	0	0	7
16:15	0	0	0	4	0	2	0	0	0	0	0	1	0	1	0	0	8
16:30	0	0	0	6	0	2	0	0	0	0	0	1	0	1	0	0	10
16:45	0	0	0	2	0	1	0	0	0	0	0	1	0	5	0	0	9
Total	0	0	0	15	0	5	0	0	0	0	0	3	0	11	0	0	34
17:00	0	0	0	1	0	3	0	0	0	0	0	3	0	1	0	0	8
17:15	0	0	0	1	0	1	0	0	0	0	0	0	0	1	0	0	3
17:30	0	0	0	4	0	5	0	0	0	0	0	1	0	0	0	0	10
17:45	0	0	0	1	0	2	0	0	0	0	0	1	0	0	0	0	4
Total	0	0	0	7	0	11	0	0	0	0	0	5	0	2	0	0	25
Grand Total	0	0	0	32	0	17	0	0	0	0	0	9	0	19	0	0	77
Apprch %	0	0	0	100	0	100	0	0	0	0	0	100	0	100	0	0	
Total %	0	0	0	41.6	0	22.1	0	0	0	0	0	11.7	0	24.7	0	0	

True Count

6520 Lemarand Ave
San Diego, CA 92115

File Name : 02.I-5 NB RAMPS.CLAIREMONT DR.PED-BIKE
Site Code : 00000000
Start Date : 2/13/2013
Page No : 2

	I-5 NB RAMPS Southbound					CLAIREMONT DR Westbound					I-5 NB RAMPS Northbound					CLAIREMONT DR Eastbound					
Start Time	**Left**	**Thru**	**Right**	**Peds**	**App. Total**	**Left**	**Thru**	**Right**	**Peds**	**App. Total**	**Left**	**Thru**	**Right**	**Peds**	**App. Total**	**Left**	**Thru**	**Right**	**Peds**	**App. Total**	**Int. Total**
Peak Hour Analysis From 07:00 to 11:45 - Peak 1 of 1																					
Peak Hour for Entire Intersection Begins at 08:00																					
08:00	0	0	0	1	1	0	1	0	0	1	0	0	0	1	1	0	1	0	0	1	4
08:15	0	0	0	2	2	0	0	0	0	0	0	0	0	0	0	0	0	0	0	0	2
08:30	0	0	0	0	0	0	0	0	0	0	0	0	0	0	0	0	2	0	0	2	2
08:45	0	0	0	3	3	0	0	0	0	0	0	0	0	0	0	0	1	0	0	1	4
Total Volume	0	0	0	6	6	0	1	0	0	1	0	0	0	1	1	0	4	0	0	4	12
% App. Total	0	0	0	100		0	100	0	0		0	0	0	100		0	100	0	0		
PHF	.000	.000	.000	.500	.500	.000	.250	.000	.000	.250	.000	.000	.000	.250	.250	.000	.500	.000	.000	.500	.750

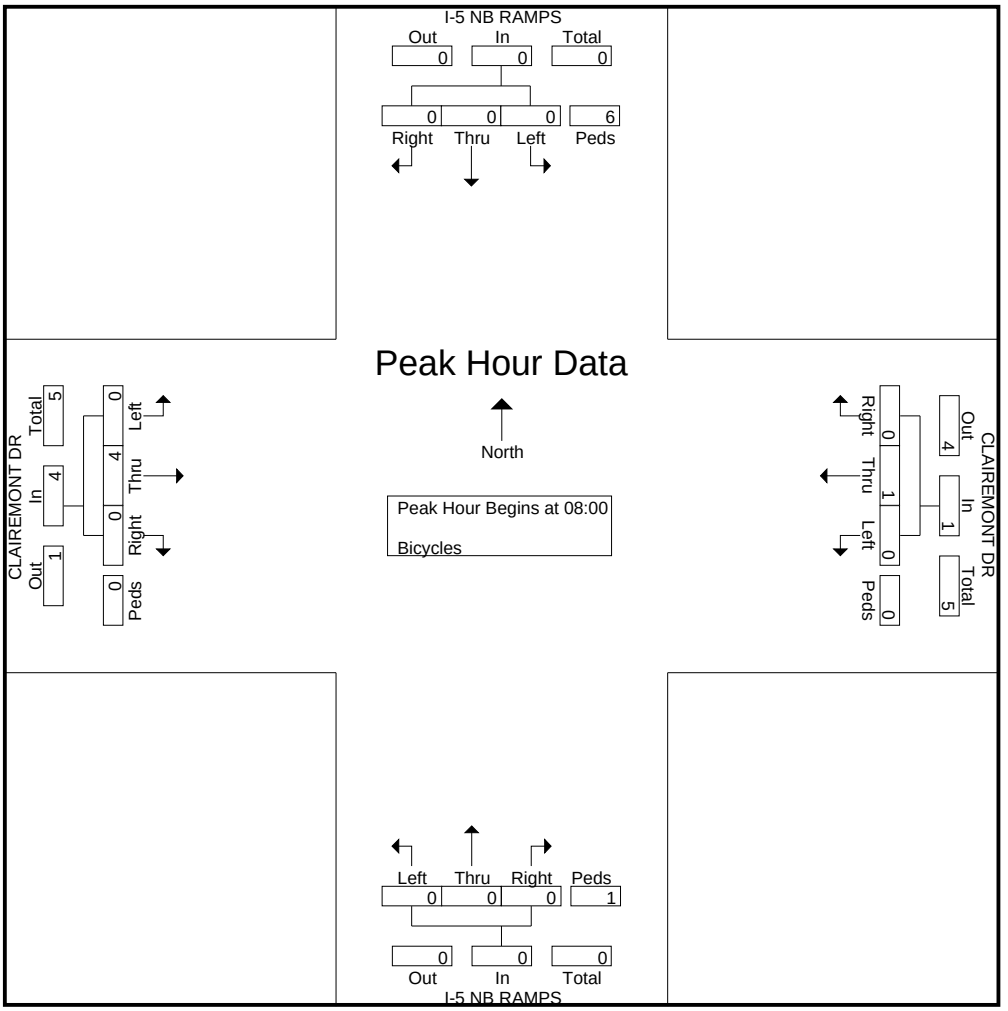

True Count

6520 Lemarand Ave
San Diego, CA 92115

File Name : 02.I-5 NB RAMPS.CLAIREMONT DR.PED-BIKE
Site Code : 00000000
Start Date : 2/13/2013
Page No : 3

	I-5 NB RAMPS Southbound					CLAIREMONT DR Westbound					I-5 NB RAMPS Northbound					CLAIREMONT DR Eastbound					
Start Time	**Left**	**Thru**	**Right**	**Peds**	**App. Total**	**Left**	**Thru**	**Right**	**Peds**	**App. Total**	**Left**	**Thru**	**Right**	**Peds**	**App. Total**	**Left**	**Thru**	**Right**	**Peds**	**App. Total**	**Int. Total**
Peak Hour Analysis From 12:00 to 17:45 - Peak 1 of 1																					
Peak Hour for Entire Intersection Begins at 16:15																					
16:15	0	0	0	4	4	0	2	0	0	2	0	0	0	1	1	0	1	0	0	1	8
16:30	0	0	0	6	6	0	2	0	0	2	0	0	0	1	1	0	1	0	0	1	10
16:45	0	0	0	2	2	0	1	0	0	1	0	0	0	1	1	0	5	0	0	5	9
17:00	0	0	0	1	1	0	3	0	0	3	0	0	0	3	3	0	1	0	0	1	8
Total Volume	0	0	0	13	13	0	8	0	0	8	0	0	0	6	6	0	8	0	0	8	35
% App. Total	0	0	0	100		0	100	0	0		0	0	0	100		0	100	0	0		
PHF	.000	.000	.000	.542	.542	.000	.667	.000	.000	.667	.000	.000	.000	.500	.500	.000	.400	.000	.000	.400	.875

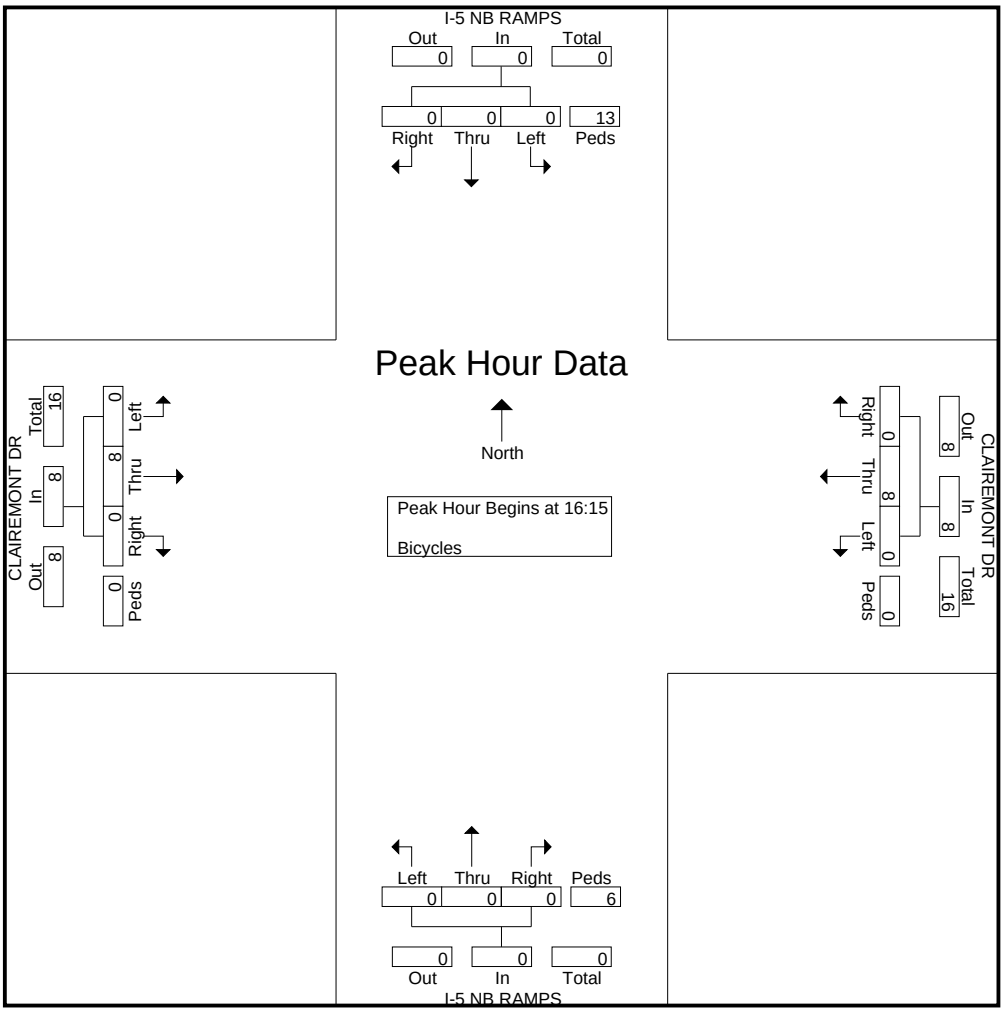

True Count

6520 Lemarand Ave
San Diego, CA 92115

File Name : 03.MORENA BLVD.INGULF ST.PED-BIKE
Site Code : 00000000
Start Date : 2/6/2013
Page No : 1

Groups Printed- Bicycles

	MORENA BLVD Southbound				INGULF ST Westbound				MORENA BLVD Northbound				Eastbound				
Start Time	Left	Thru	Right	Peds	Left	Thru	Right	Peds	Left	Thru	Right	Peds	Left	Thru	Right	Peds	Int. Total
07:00	0	3	0	0	0	0	0	1	0	1	1	0	0	0	0	0	6
07:15	0	0	0	0	0	0	0	0	0	1	0	0	0	0	0	0	1
07:30	0	1	0	0	0	0	0	0	0	2	0	0	0	0	0	0	3
07:45	0	0	0	0	0	0	0	0	0	1	0	0	0	0	0	0	1
Total	0	4	0	0	0	0	0	1	0	5	1	0	0	0	0	0	11
08:00	0	1	0	0	0	0	0	0	0	4	1	0	0	0	0	0	6
08:15	0	0	0	0	0	0	0	1	0	0	0	0	0	0	0	0	1
*** BREAK ***																	
08:45	0	0	0	0	0	0	1	0	0	2	0	0	0	0	0	0	3
Total	0	1	0	0	0	0	1	1	0	6	1	0	0	0	0	0	10
*** BREAK ***																	
16:00	0	1	0	0	0	0	1	0	0	2	0	0	0	0	0	0	4
16:15	0	0	0	0	0	1	1	1	0	1	0	0	0	0	0	0	4
16:30	0	0	0	0	0	0	0	2	0	0	0	0	0	0	0	0	2
16:45	0	0	0	0	0	0	1	1	0	0	0	0	0	0	0	0	2
Total	0	1	0	0	0	1	3	4	0	3	0	0	0	0	0	0	12
17:00	0	0	0	0	0	0	0	1	0	1	0	0	0	0	0	0	2
17:15	0	1	0	0	0	0	0	1	0	0	1	0	0	0	0	0	3
17:30	0	1	0	1	0	0	2	4	0	1	0	0	0	0	0	0	9
17:45	0	2	0	0	0	0	0	0	0	2	0	0	0	0	0	0	4
Total	0	4	0	1	0	0	2	6	0	4	1	0	0	0	0	0	18
Grand Total	0	10	0	1	0	1	6	12	0	18	3	0	0	0	0	0	51
Apprch %	0	90.9	0	9.1	0	5.3	31.6	63.2	0	85.7	14.3	0	0	0	0	0	
Total %	0	19.6	0	2	0	2	11.8	23.5	0	35.3	5.9	0	0	0	0	0	

True Count

6520 Lemarand Ave
San Diego, CA 92115

File Name : 03.MORENA BLVD.INGULF ST.PED-BIKE
Site Code : 00000000
Start Date : 2/6/2013
Page No : 2

	MORENA BLVD Southbound					INGULF ST Westbound					MORENA BLVD Northbound					Eastbound					
Start Time	**Left**	**Thru**	**Right**	**Peds**	**App. Total**	**Left**	**Thru**	**Right**	**Peds**	**App. Total**	**Left**	**Thru**	**Right**	**Peds**	**App. Total**	**Left**	**Thru**	**Right**	**Peds**	**App. Total**	**Int. Total**
Peak Hour Analysis From 07:00 to 11:45 - Peak 1 of 1																					
Peak Hour for Entire Intersection Begins at 07:00																					
07:00	0	3	0	0	3	0	0	0	1	1	0	1	1	0	2	0	0	0	0	0	6
07:15	0	0	0	0	0	0	0	0	0	0	0	1	0	0	1	0	0	0	0	0	1
07:30	0	1	0	0	1	0	0	0	0	0	0	2	0	0	2	0	0	0	0	0	3
07:45	0	0	0	0	0	0	0	0	0	0	0	1	0	0	1	0	0	0	0	0	1
Total Volume	0	4	0	0	4	0	0	0	1	1	0	5	1	0	6	0	0	0	0	0	11
% App. Total	0	100	0	0		0	0	0	100		0	83.3	16.7	0		0	0	0	0		
PHF	.000	.333	.000	.000	.333	.000	.000	.000	.250	.250	.000	.625	.250	.000	.750	.000	.000	.000	.000	.000	.458

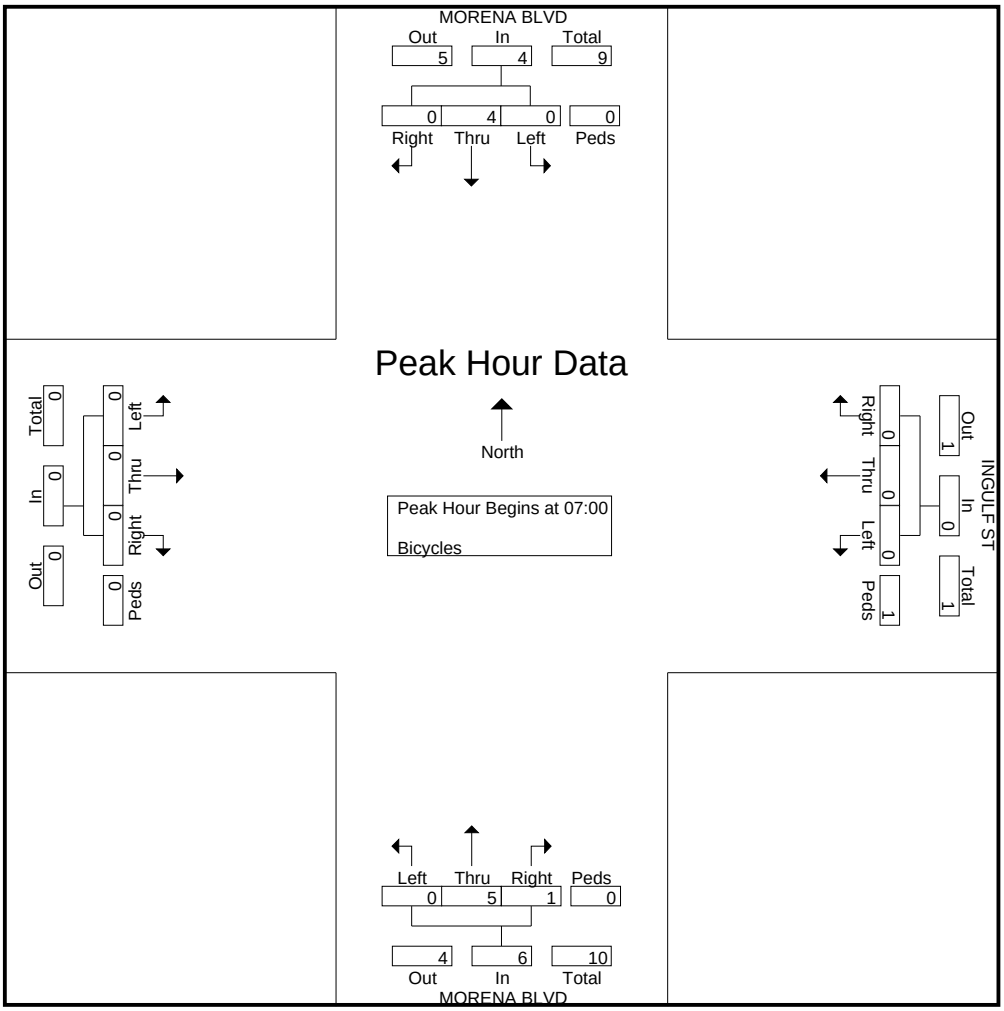

True Count

6520 Lemarand Ave
San Diego, CA 92115

File Name : 03.MORENA BLVD.INGULF ST.PED-BIKE
Site Code : 00000000
Start Date : 2/6/2013
Page No : 3

	MORENA BLVD Southbound					INGULF ST Westbound					MORENA BLVD Northbound					Eastbound					
Start Time	**Left**	**Thru**	**Right**	**Peds**	**App. Total**	**Left**	**Thru**	**Right**	**Peds**	**App. Total**	**Left**	**Thru**	**Right**	**Peds**	**App. Total**	**Left**	**Thru**	**Right**	**Peds**	**App. Total**	**Int. Total**
Peak Hour Analysis From 12:00 to 17:45 - Peak 1 of 1																					
Peak Hour for Entire Intersection Begins at 17:00																					
17:00	0	0	0	0	0	0	0	0	1	1	0	1	0	0	1	0	0	0	0	0	2
17:15	0	1	0	0	1	0	0	0	1	1	0	0	1	0	1	0	0	0	0	0	3
17:30	0	1	0	1	2	0	0	2	4	6	0	1	0	0	1	0	0	0	0	0	9
17:45	0	2	0	0	2	0	0	0	0	0	0	2	0	0	2	0	0	0	0	0	4
Total Volume	0	4	0	1	5	0	0	2	6	8	0	4	1	0	5	0	0	0	0	0	18
% App. Total	0	80	0	20		0	0	25	75		0	80	20	0		0	0	0	0		
PHF	.000	.500	.000	.250	.625	.000	.000	.250	.375	.333	.000	.500	.250	.000	.625	.000	.000	.000	.000	.000	.500

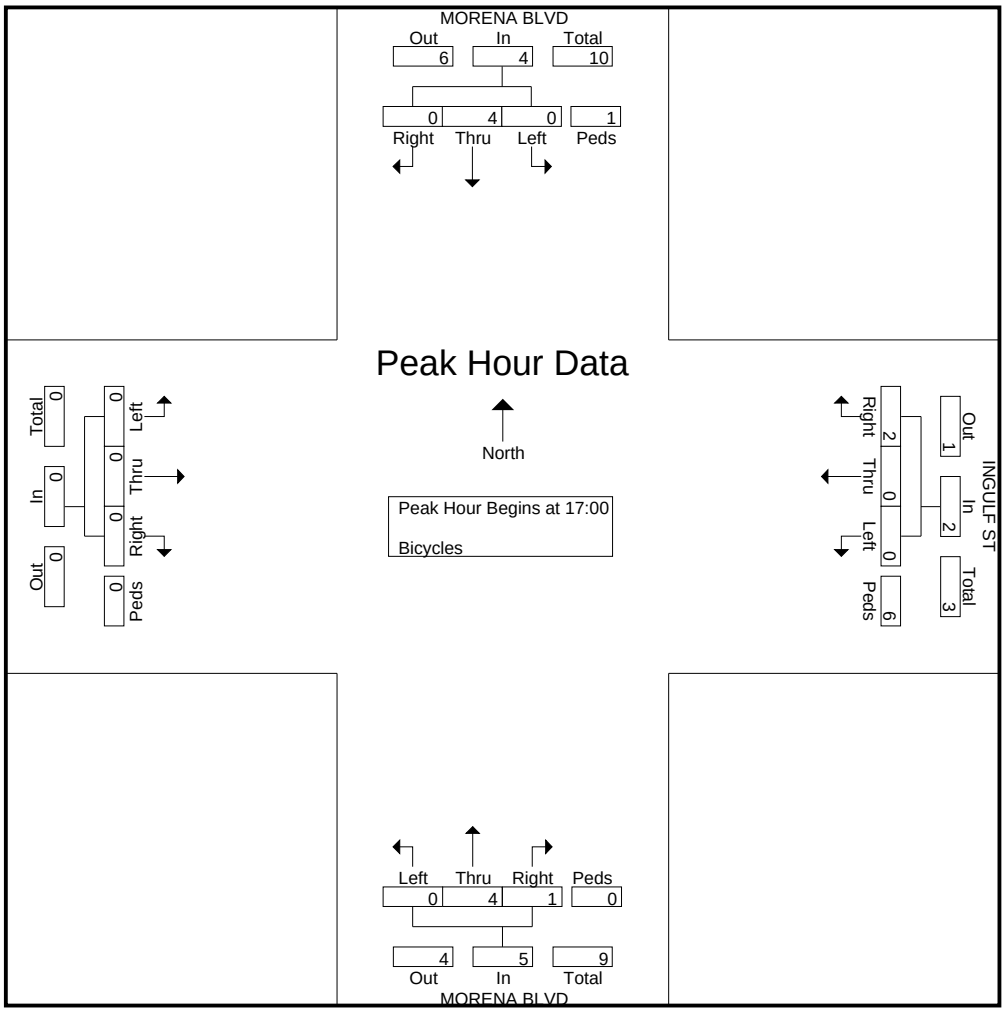

True Count

6520 Lemarand Ave
San Diego, CA 92115

File Name : 04.CLAIREMONT DR.DENVER ST.PED-BIKE
Site Code : 00000000
Start Date : 2/12/2013
Page No : 1

Groups Printed- Bicycles

	DENVER ST Southbound				CLAIREMONT DR Westbound				DENVER ST Northbound				CLAIREMONT DR Eastbound				
Start Time	Left	Thru	Right	Peds	Left	Thru	Right	Peds	Left	Thru	Right	Peds	Left	Thru	Right	Peds	Int. Total
07:00	0	0	0	0	0	0	0	1	0	0	0	0	0	0	0	2	3
07:15	0	0	0	1	0	0	0	2	0	0	0	0	0	0	0	1	4
07:30	0	0	0	0	0	0	0	0	0	0	0	0	0	0	0	2	2
07:45	0	0	0	0	0	0	0	1	0	0	0	0	0	0	0	1	2
Total	0	0	0	1	0	0	0	4	0	0	0	0	0	0	0	6	11
08:00	0	1	1	3	0	2	0	2	0	0	0	1	0	0	2	0	12
08:15	0	0	0	0	0	0	0	4	0	0	0	1	0	0	1	2	8
08:30	0	1	0	2	0	0	0	2	0	0	0	2	0	0	0	0	7
08:45	0	0	0	0	0	0	0	0	1	0	0	0	0	0	0	0	1
Total	0	2	1	5	0	2	0	8	1	0	0	4	0	0	3	2	28
*** BREAK ***																	
16:00	0	0	0	0	0	0	0	1	1	0	0	0	0	2	0	1	5
16:15	0	0	1	0	0	0	0	1	0	0	0	2	0	1	0	2	7
16:30	0	0	0	1	0	1	0	1	0	1	0	1	0	1	0	0	6
16:45	1	1	1	0	0	0	0	2	0	0	0	0	0	0	1	1	7
Total	1	1	2	1	0	1	0	5	1	1	0	3	0	4	1	4	25
17:00	0	0	0	3	0	1	0	3	0	0	0	2	0	0	0	2	11
17:15	0	0	0	0	0	0	0	1	0	0	0	2	0	0	0	2	5
17:30	0	0	0	1	0	0	0	3	0	0	0	1	1	0	0	0	6
17:45	0	0	0	0	0	0	0	0	0	1	0	1	0	1	0	0	3
Total	0	0	0	4	0	1	0	7	0	1	0	6	1	1	0	4	25
Grand Total	1	3	3	11	0	4	0	24	2	2	0	13	1	5	4	16	89
Apprch %	5.6	16.7	16.7	61.1	0	14.3	0	85.7	11.8	11.8	0	76.5	3.8	19.2	15.4	61.5	
Total %	1.1	3.4	3.4	12.4	0	4.5	0	27	2.2	2.2	0	14.6	1.1	5.6	4.5	18	

True Count

6520 Lemarand Ave
San Diego, CA 92115

File Name : 04.CLAIREMONT DR.DENVER ST.PED-BIKE
Site Code : 00000000
Start Date : 2/12/2013
Page No : 2

	DENVER ST Southbound					CLAIREMONT DR Westbound					DENVER ST Northbound					CLAIREMONT DR Eastbound					
Start Time	**Left**	**Thru**	**Right**	**Peds**	**App. Total**	**Left**	**Thru**	**Right**	**Peds**	**App. Total**	**Left**	**Thru**	**Right**	**Peds**	**App. Total**	**Left**	**Thru**	**Right**	**Peds**	**App. Total**	**Int. Total**
Peak Hour Analysis From 07:00 to 11:45 - Peak 1 of 1																					
Peak Hour for Entire Intersection Begins at 07:45																					
07:45	0	0	0	0	0	0	0	0	1	1	0	0	0	0	0	0	0	0	1	1	2
08:00	0	1	1	3	5	0	2	0	2	4	0	0	0	1	1	0	0	2	0	2	12
08:15	0	0	0	0	0	0	0	0	4	4	0	0	0	1	1	0	0	1	2	3	8
08:30	0	1	0	2	3	0	0	0	2	2	0	0	0	2	2	0	0	0	0	0	7
Total Volume	0	2	1	5	8	0	2	0	9	11	0	0	0	4	4	0	0	3	3	6	29
% App. Total	0	25	12.5	62.5		0	18.2	0	81.8		0	0	0	100		0	0	50	50		
PHF	.000	.500	.250	.417	.400	.000	.250	.000	.563	.688	.000	.000	.000	.500	.500	.000	.000	.375	.375	.500	.604

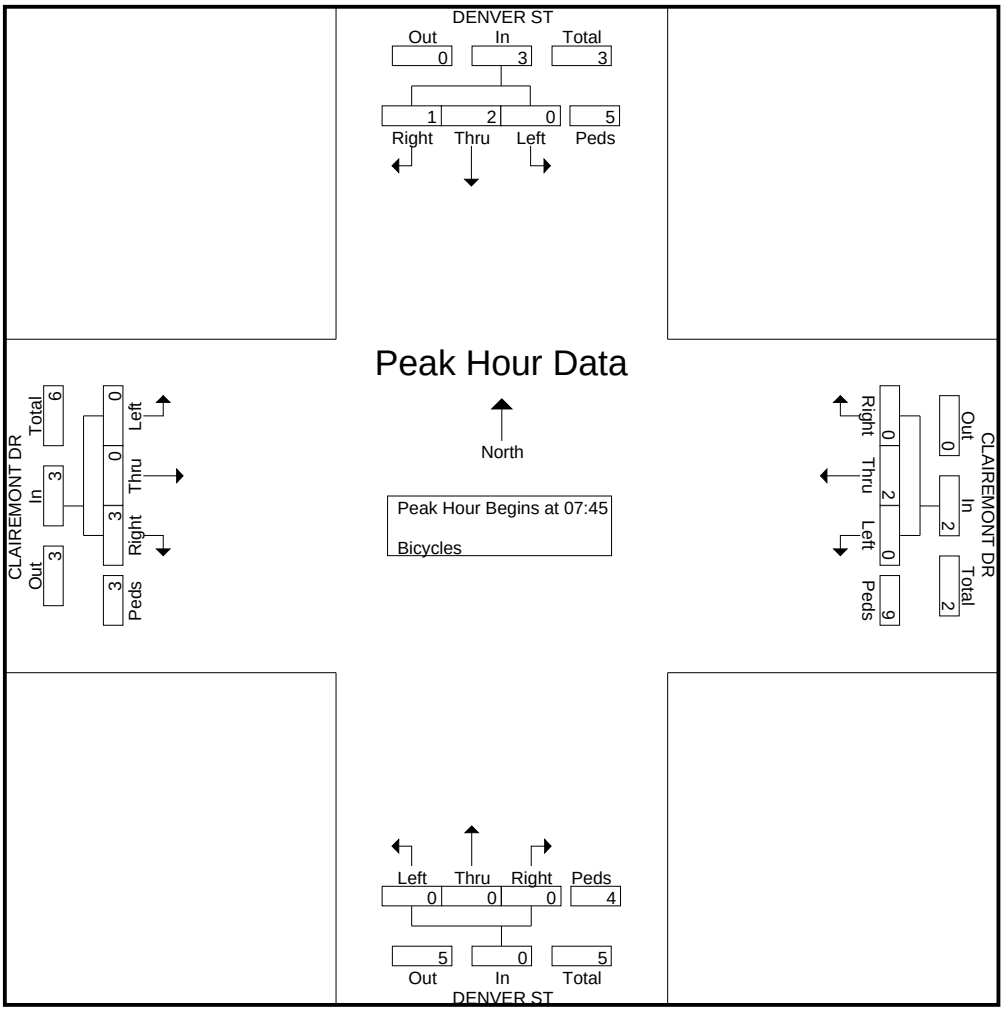

True Count

6520 Lemarand Ave
San Diego, CA 92115

File Name : 04.CLAIREMONT DR.DENVER ST.PED-BIKE
Site Code : 00000000
Start Date : 2/12/2013
Page No : 3

	DENVER ST Southbound					CLAIREMONT DR Westbound					DENVER ST Northbound					CLAIREMONT DR Eastbound					
Start Time	**Left**	**Thru**	**Right**	**Peds**	**App. Total**	**Left**	**Thru**	**Right**	**Peds**	**App. Total**	**Left**	**Thru**	**Right**	**Peds**	**App. Total**	**Left**	**Thru**	**Right**	**Peds**	**App. Total**	**Int. Total**
Peak Hour Analysis From 12:00 to 17:45 - Peak 1 of 1																					
Peak Hour for Entire Intersection Begins at 16:15																					
16:15	0	0	1	0	1	0	0	0	1	1	0	0	0	2	2	0	1	0	2	3	7
16:30	0	0	0	1	1	0	1	0	1	2	0	1	0	1	2	0	1	0	0	1	6
16:45	1	1	1	0	3	0	0	0	2	2	0	0	0	0	0	0	0	1	1	2	7
17:00	0	0	0	3	3	0	1	0	3	4	0	0	0	2	2	0	0	0	2	2	11
Total Volume	1	1	2	4	8	0	2	0	7	9	0	1	0	5	6	0	2	1	5	8	31
% App. Total	12.5	12.5	25	50		0	22.2	0	77.8		0	16.7	0	83.3		0	25	12.5	62.5		
PHF	.250	.250	.500	.333	.667	.000	.500	.000	.583	.563	.000	.250	.000	.625	.750	.000	.500	.250	.625	.667	.705

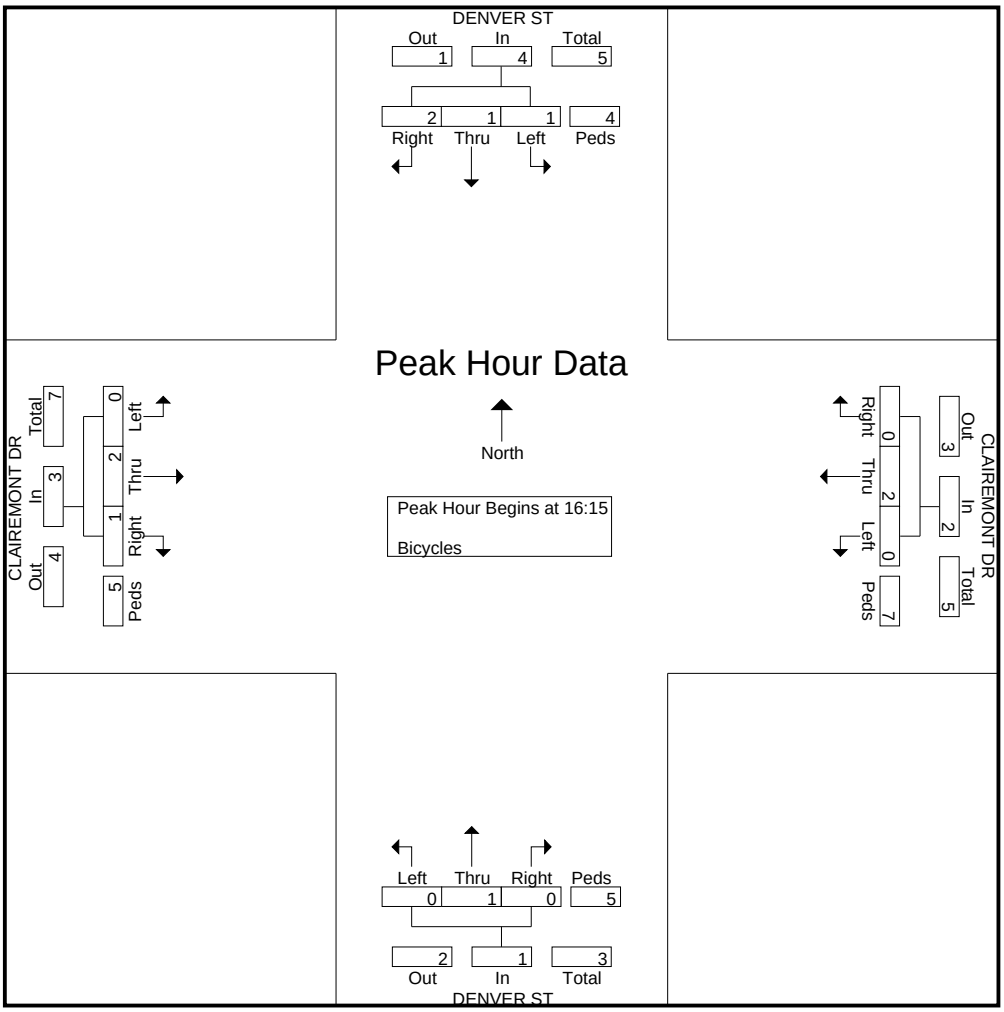

True Count

6520 Lemarand Ave
San Diego, CA 92115

File Name : 05.MORENA BLVD.JELLET ST.PED-BIKE
Site Code : 00000000
Start Date : 2/12/2013
Page No : 1

Groups Printed- Bicycles

	MORENA BLVD Southbound				JELLET ST Westbound				MORENA BLVD Northbound				Eastbound				
Start Time	Left	Thru	Right	Peds	Left	Thru	Right	Peds	Left	Thru	Right	Peds	Left	Thru	Right	Peds	Int. Total
07:00	0	1	0	0	0	0	1	1	0	1	0	0	0	0	0	0	4
07:15	0	0	0	0	0	0	0	1	0	2	0	0	0	0	0	0	3
07:30	0	1	0	0	0	0	0	1	0	0	0	0	0	0	0	0	2
*** BREAK ***																	
Total	0	2	0	0	0	0	1	3	0	3	0	0	0	0	0	0	9
08:00	0	1	0	0	1	0	0	6	0	1	0	0	0	0	0	0	9
08:15	0	0	0	0	0	0	0	0	0	1	0	1	0	0	0	0	2
08:30	0	1	0	0	0	0	0	0	0	0	0	0	0	0	0	0	1
08:45	0	0	0	0	0	0	0	0	0	3	0	0	0	0	0	0	3
Total	0	2	0	0	1	0	0	6	0	5	0	1	0	0	0	0	15
*** BREAK ***																	
16:00	0	1	0	0	0	0	0	1	0	2	0	0	0	0	0	0	4
16:15	0	0	0	0	0	0	0	3	0	1	1	0	0	0	0	0	5
16:30	0	0	0	0	0	0	0	2	0	1	1	0	0	0	0	0	4
16:45	0	2	0	0	0	0	0	1	0	1	0	0	0	0	0	0	4
Total	0	3	0	0	0	0	0	7	0	5	2	0	0	0	0	0	17
17:00	0	0	0	0	0	0	0	2	0	0	1	0	0	0	0	0	3
17:15	0	0	0	0	0	0	0	1	0	0	0	0	0	0	0	0	1
17:30	0	1	0	0	0	0	0	1	0	0	0	0	0	0	0	0	2
17:45	0	1	0	0	0	0	0	3	0	0	0	0	0	0	0	0	4
Total	0	2	0	0	0	0	0	7	0	0	1	0	0	0	0	0	10
Grand Total	0	9	0	0	1	0	1	23	0	13	3	1	0	0	0	0	51
Apprch %	0	100	0	0	4	0	4	92	0	76.5	17.6	5.9	0	0	0	0	
Total %	0	17.6	0	0	2	0	2	45.1	0	25.5	5.9	2	0	0	0	0	

True Count

6520 Lemarand Ave
San Diego, CA 92115

File Name : 05.MORENA BLVD.JELLET ST.PED-BIKE
Site Code : 00000000
Start Date : 2/12/2013
Page No : 2

	MORENA BLVD Southbound					JELLET ST Westbound					MORENA BLVD Northbound					Eastbound					
Start Time	Left	Thru	Right	Peds	App. Total	Left	Thru	Right	Peds	App. Total	Left	Thru	Right	Peds	App. Total	Left	Thru	Right	Peds	App. Total	Int. Total
Peak Hour Analysis From 07:00 to 11:45 - Peak 1 of 1																					
Peak Hour for Entire Intersection Begins at 08:00																					
08:00	0	1	0	0	1	1	0	0	6	7	0	1	0	0	1	0	0	0	0	0	9
08:15	0	0	0	0	0	0	0	0	0	0	0	1	0	1	2	0	0	0	0	0	2
08:30	0	1	0	0	1	0	0	0	0	0	0	0	0	0	0	0	0	0	0	0	1
08:45	0	0	0	0	0	0	0	0	0	0	0	3	0	0	3	0	0	0	0	0	3
Total Volume	0	2	0	0	2	1	0	0	6	7	0	5	0	1	6	0	0	0	0	0	15
% App. Total	0	100	0	0		14.3	0	0	85.7		0	83.3	0	16.7		0	0	0	0		
PHF	.000	.500	.000	.000	.500	.250	.000	.000	.250	.250	.000	.417	.000	.250	.500	.000	.000	.000	.000	.000	.417

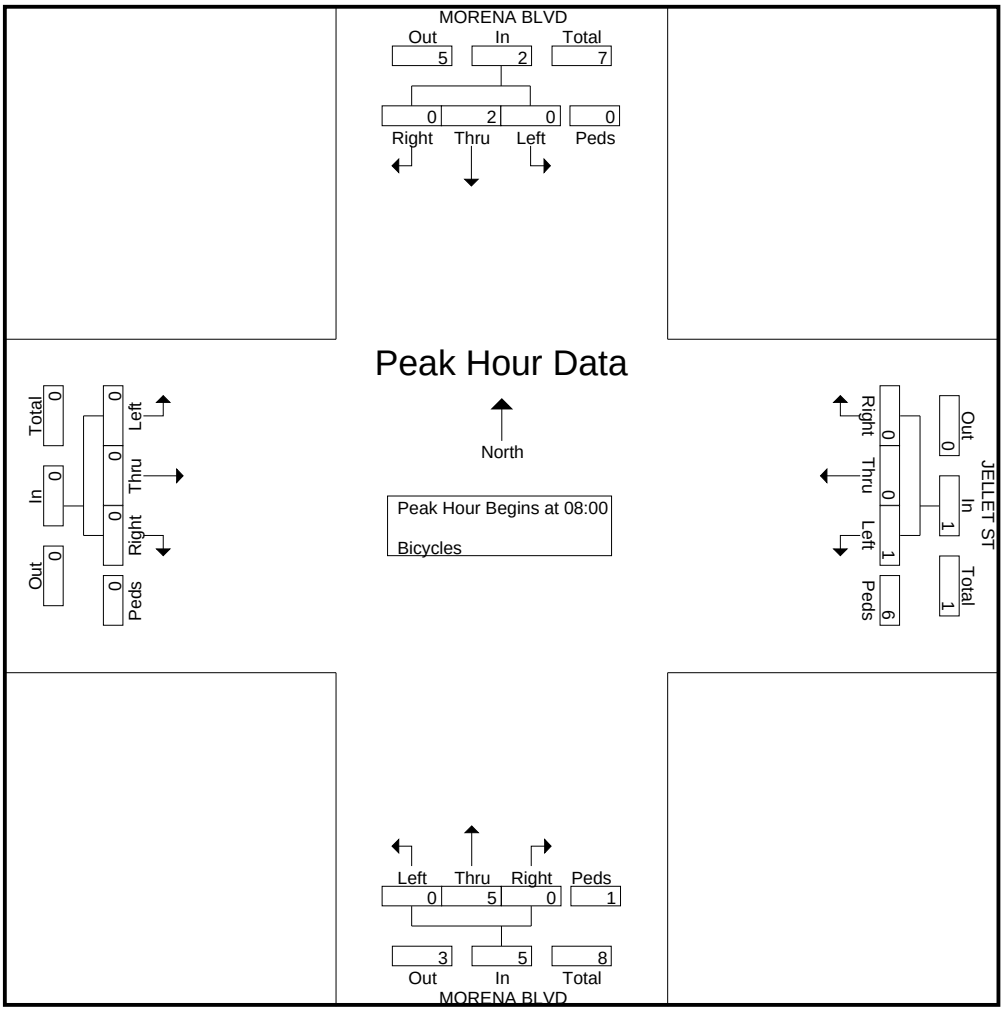

True Count

6520 Lemarand Ave
San Diego, CA 92115

File Name : 05.MORENA BLVD.JELLET ST.PED-BIKE
Site Code : 00000000
Start Date : 2/12/2013
Page No : 3

	MORENA BLVD Southbound					JELLET ST Westbound					MORENA BLVD Northbound					Eastbound					
Start Time	**Left**	**Thru**	**Right**	**Peds**	**App. Total**	**Left**	**Thru**	**Right**	**Peds**	**App. Total**	**Left**	**Thru**	**Right**	**Peds**	**App. Total**	**Left**	**Thru**	**Right**	**Peds**	**App. Total**	**Int. Total**
Peak Hour Analysis From 12:00 to 17:45 - Peak 1 of 1																					
Peak Hour for Entire Intersection Begins at 16:00																					
16:00	0	1	0	0	1	0	0	0	1	1	0	2	0	0	2	0	0	0	0	0	4
16:15	0	0	0	0	0	0	0	0	3	3	0	1	1	0	2	0	0	0	0	0	5
16:30	0	0	0	0	0	0	0	0	2	2	0	1	1	0	2	0	0	0	0	0	4
16:45	0	2	0	0	2	0	0	0	1	1	0	1	0	0	1	0	0	0	0	0	4
Total Volume	0	3	0	0	3	0	0	0	7	7	0	5	2	0	7	0	0	0	0	0	17
% App. Total	0	100	0	0		0	0	0	100		0	71.4	28.6	0		0	0	0	0		
PHF	.000	.375	.000	.000	.375	.000	.000	.000	.583	.583	.000	.625	.500	.000	.875	.000	.000	.000	.000	.000	.850

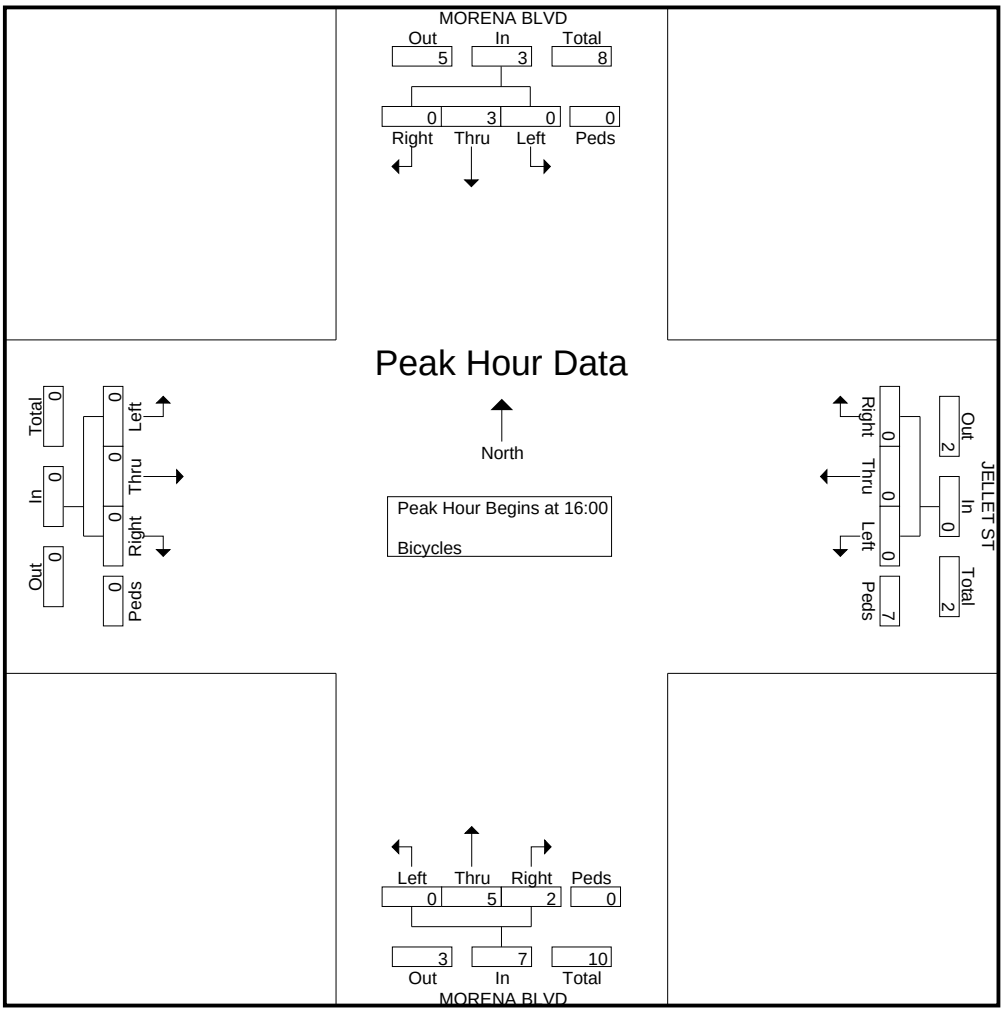

True Count

6520 Lemarand Ave
San Diego, CA 92115

File Name : 06.DENVER ST.INGULF ST.PED-BIKE
Site Code : 00000000
Start Date : 2/6/2013
Page No : 1

Groups Printed- Bicycles

	DENVER ST Southbound				INGULF ST Westbound				DENVER ST Northbound				INGULF ST Eastbound				
Start Time	Left	Thru	Right	Peds	Left	Thru	Right	Peds	Left	Thru	Right	Peds	Left	Thru	Right	Peds	Int. Total
07:00	0	0	0	0	0	0	0	2	0	0	0	0	0	0	0	0	2
07:15	0	0	0	0	0	0	0	0	0	0	0	0	0	0	0	1	1
07:30	0	0	0	1	0	0	0	0	0	0	0	0	0	0	0	1	2
07:45	0	1	0	0	0	0	1	0	0	0	0	0	0	0	0	0	2
Total	0	1	0	1	0	0	1	2	0	0	0	0	0	0	0	2	7
08:00	0	0	0	2	0	0	0	0	0	0	0	0	1	0	0	0	3
08:15	0	0	0	1	0	0	0	0	0	0	0	0	0	0	0	0	1
08:30	0	0	0	0	0	0	0	1	0	0	0	0	0	0	0	0	1
*** BREAK ***																	
Total	0	0	0	3	0	0	0	1	0	0	0	0	1	0	0	0	5
*** BREAK ***																	
16:00	0	0	0	0	0	0	0	1	0	1	0	0	0	0	0	1	3
16:15	0	0	1	0	0	0	0	1	0	0	0	0	0	0	0	0	2
16:30	0	0	0	2	0	0	0	0	0	0	0	0	0	0	0	0	2
16:45	0	0	0	1	0	1	0	1	0	0	0	0	0	0	0	0	3
Total	0	0	1	3	0	1	0	3	0	1	0	0	0	0	0	1	10
17:00	1	0	0	1	0	0	1	2	0	0	0	0	0	0	0	1	6
17:15	0	1	3	1	0	1	1	0	0	0	0	1	1	0	0	3	12
17:30	2	0	0	0	0	0	0	0	0	0	0	1	0	0	0	1	4
17:45	0	0	0	0	0	0	0	1	0	0	0	0	0	0	0	0	1
Total	3	1	3	2	0	1	2	3	0	0	0	2	1	0	0	5	23
Grand Total	3	2	4	9	0	2	3	9	0	1	0	2	2	0	0	8	45
Apprch %	16.7	11.1	22.2	50	0	14.3	21.4	64.3	0	33.3	0	66.7	20	0	0	80	
Total %	6.7	4.4	8.9	20	0	4.4	6.7	20	0	2.2	0	4.4	4.4	0	0	17.8	

True Count

6520 Lemarand Ave
San Diego, CA 92115

File Name : 06.DENVER ST.INGULF ST.PED-BIKE
Site Code : 00000000
Start Date : 2/6/2013
Page No : 2

	DENVER ST Southbound					INGULF ST Westbound					DENVER ST Northbound					INGULF ST Eastbound					
Start Time	**Left**	**Thru**	**Right**	**Peds**	**App. Total**	**Left**	**Thru**	**Right**	**Peds**	**App. Total**	**Left**	**Thru**	**Right**	**Peds**	**App. Total**	**Left**	**Thru**	**Right**	**Peds**	**App. Total**	**Int. Total**
Peak Hour Analysis From 07:00 to 11:45 - Peak 1 of 1																					
Peak Hour for Entire Intersection Begins at 07:15																					
07:15	0	0	0	0	0	0	0	0	0	0	0	0	0	0	0	0	0	0	1	1	1
07:30	0	0	0	1	1	0	0	0	0	0	0	0	0	0	0	0	0	0	1	1	2
07:45	0	1	0	0	1	0	0	1	0	1	0	0	0	0	0	0	0	0	0	0	2
08:00	0	0	0	2	2	0	0	0	0	0	0	0	0	0	0	1	0	0	0	1	3
Total Volume	0	1	0	3	4	0	0	1	0	1	0	0	0	0	0	1	0	0	2	3	8
% App. Total	0	25	0	75		0	0	100	0		0	0	0	0		33.3	0	0	66.7		
PHF	.000	.250	.000	.375	.500	.000	.000	.250	.000	.250	.000	.000	.000	.000	.000	.250	.000	.000	.500	.750	.667

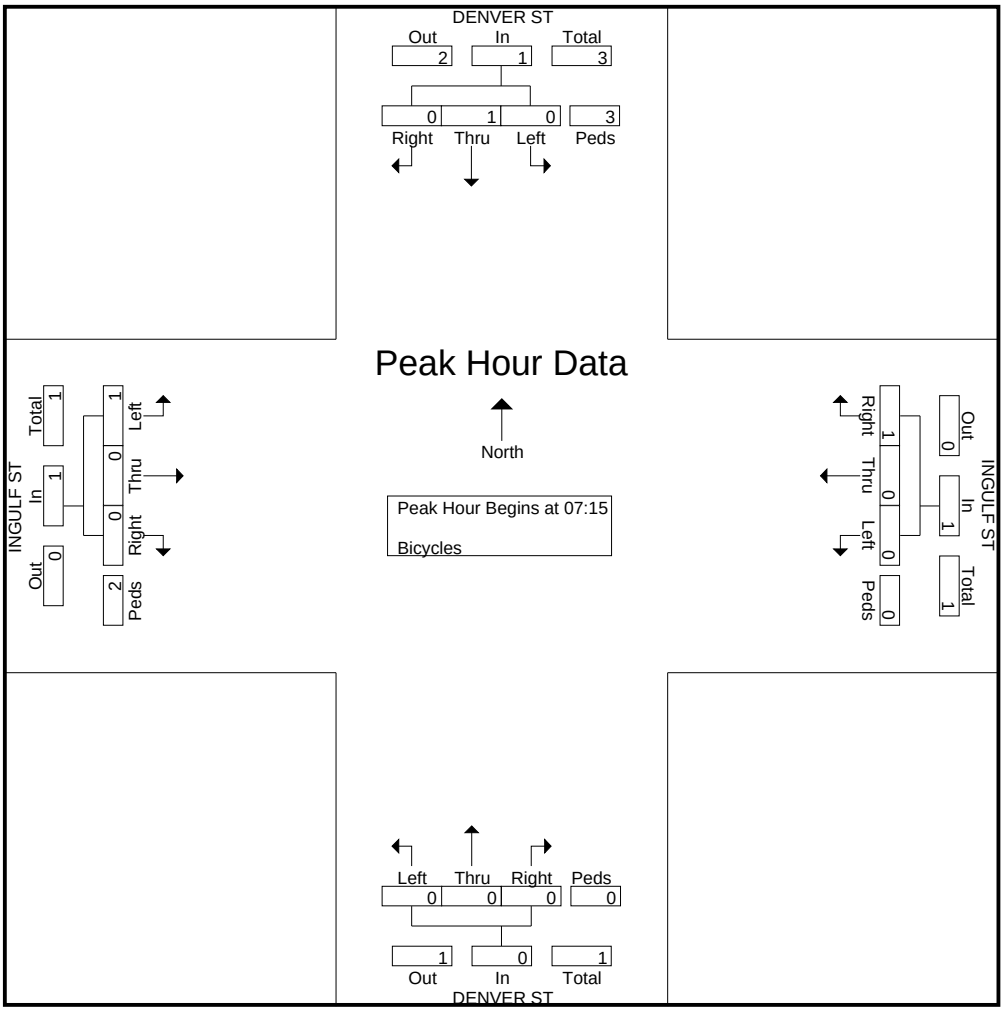

True Count

6520 Lemarand Ave
San Diego, CA 92115

File Name : 06.DENVER ST.INGULF ST.PED-BIKE
Site Code : 00000000
Start Date : 2/6/2013
Page No : 3

	DENVER ST Southbound					INGULF ST Westbound					DENVER ST Northbound					INGULF ST Eastbound					
Start Time	**Left**	**Thru**	**Right**	**Peds**	**App. Total**	**Left**	**Thru**	**Right**	**Peds**	**App. Total**	**Left**	**Thru**	**Right**	**Peds**	**App. Total**	**Left**	**Thru**	**Right**	**Peds**	**App. Total**	**Int. Total**
Peak Hour Analysis From 12:00 to 17:45 - Peak 1 of 1																					
Peak Hour for Entire Intersection Begins at 16:45																					
16:45	0	0	0	1	1	0	1	0	1	2	0	0	0	0	0	0	0	0	0	0	3
17:00	1	0	0	1	2	0	0	1	2	3	0	0	0	0	0	0	0	0	1	1	6
17:15	0	1	3	1	5	0	1	1	0	2	0	0	0	1	1	1	0	0	3	4	12
17:30	2	0	0	0	2	0	0	0	0	0	0	0	0	1	1	0	0	0	1	1	4
Total Volume	3	1	3	3	10	0	2	2	3	7	0	0	0	2	2	1	0	0	5	6	25
% App. Total	30	10	30	30		0	28.6	28.6	42.9		0	0	0	100		16.7	0	0	83.3		
PHF	.375	.250	.250	.750	.500	.000	.500	.500	.375	.583	.000	.000	.000	.500	.500	.250	.000	.000	.417	.375	.521

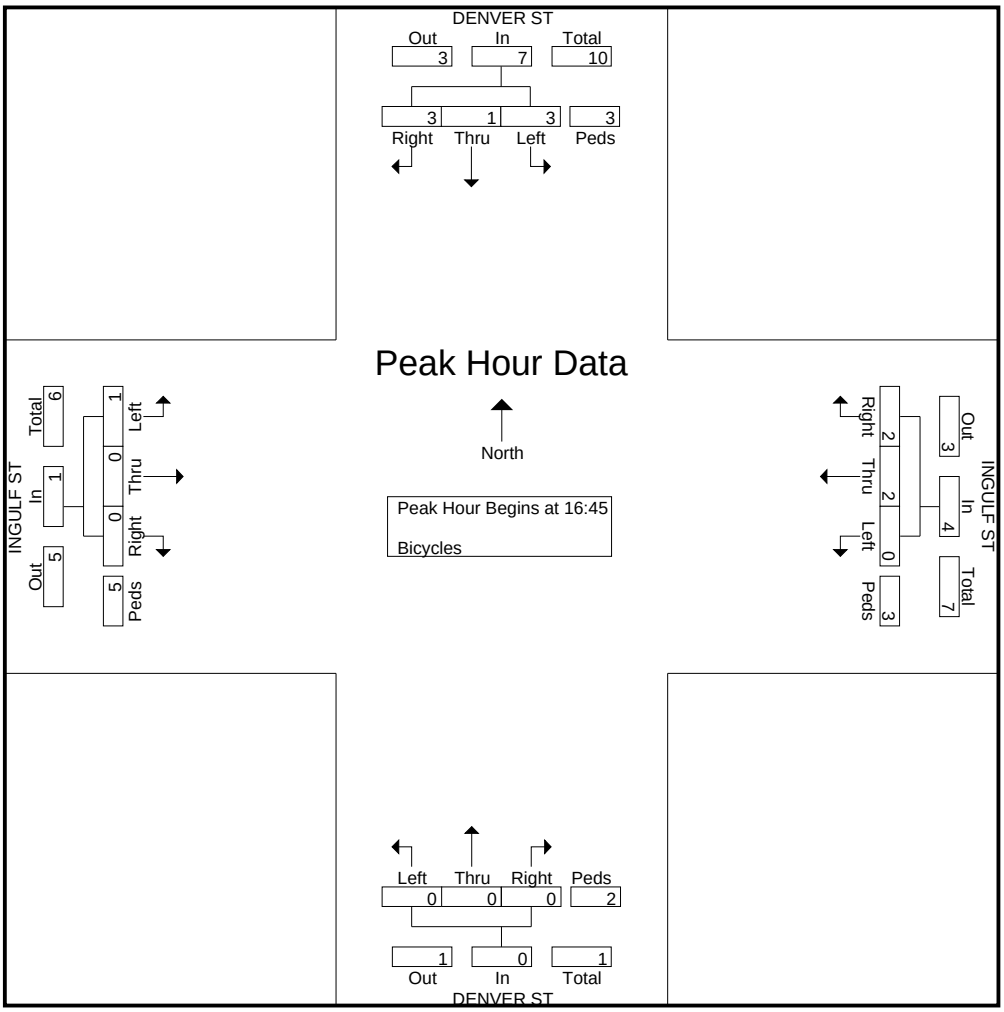

True Count

6520 Lemarand Ave
San Diego, CA 92115

File Name : 07.MORENA BLVD.MILTON ST.PED-BIKE
Site Code : 00000000
Start Date : 2/6/2013
Page No : 1

Groups Printed- Bicycles

	MORENA BLVD Southbound				MILTON ST Westbound				MORENA BLVD Northbound				Eastbound				
Start Time	Left	Thru	Right	Peds	Left	Thru	Right	Peds	Left	Thru	Right	Peds	Left	Thru	Right	Peds	Int. Total
07:00	0	3	0	0	0	0	1	2	0	0	0	0	0	0	0	0	6
07:15	0	0	0	0	0	0	0	0	0	1	0	0	0	0	0	0	1
07:30	0	1	0	0	1	0	0	2	0	2	0	0	0	0	0	0	6
07:45	0	0	0	0	1	0	0	0	0	2	0	0	0	0	0	0	3
Total	0	4	0	0	2	0	1	4	0	5	0	0	0	0	0	0	16
08:00	0	1	0	0	0	0	0	1	0	4	0	0	0	0	0	0	6
08:15	0	0	0	0	0	0	0	4	0	0	0	0	0	0	0	0	4
*** BREAK ***																	
08:45	0	0	0	0	0	0	0	0	0	2	0	0	0	0	0	0	2
Total	0	1	0	0	0	0	0	5	0	6	0	0	0	0	0	0	12
*** BREAK ***																	
16:00	0	1	0	0	0	0	0	0	0	2	0	0	0	0	0	0	3
16:15	0	1	0	1	0	0	0	0	0	0	0	0	0	0	0	0	2
*** BREAK ***																	
16:45	0	0	0	0	0	0	1	0	0	1	0	0	0	0	0	0	2
Total	0	2	0	1	0	0	1	0	0	3	0	0	0	0	0	0	7
17:00	0	0	0	0	0	0	0	2	0	1	0	0	0	0	0	0	3
17:15	0	1	0	0	0	0	0	1	0	1	0	0	0	0	0	0	3
17:30	0	1	0	0	0	0	0	1	0	1	0	0	0	0	0	0	3
17:45	0	2	0	0	0	0	0	0	0	2	0	0	0	0	0	0	4
Total	0	4	0	0	0	0	0	4	0	5	0	0	0	0	0	0	13
Grand Total	0	11	0	1	2	0	2	13	0	19	0	0	0	0	0	0	48
Apprch %	0	91.7	0	8.3	11.8	0	11.8	76.5	0	100	0	0	0	0	0	0	
Total %	0	22.9	0	2.1	4.2	0	4.2	27.1	0	39.6	0	0	0	0	0	0	

True Count

6520 Lemarand Ave
San Diego, CA 92115

File Name : 07.MORENA BLVD.MILTON ST.PED-BIKE
Site Code : 00000000
Start Date : 2/6/2013
Page No : 2

	MORENA BLVD Southbound					MILTON ST Westbound					MORENA BLVD Northbound					Eastbound					
Start Time	**Left**	**Thru**	**Right**	**Peds**	**App. Total**	**Left**	**Thru**	**Right**	**Peds**	**App. Total**	**Left**	**Thru**	**Right**	**Peds**	**App. Total**	**Left**	**Thru**	**Right**	**Peds**	**App. Total**	**Int. Total**
Peak Hour Analysis From 07:00 to 11:45 - Peak 1 of 1																					
Peak Hour for Entire Intersection Begins at 07:30																					
07:30	0	1	0	0	1	1	0	0	2	3	0	2	0	0	2	0	0	0	0	0	6
07:45	0	0	0	0	0	1	0	0	0	1	0	2	0	0	2	0	0	0	0	0	3
08:00	0	1	0	0	1	0	0	0	1	1	0	4	0	0	4	0	0	0	0	0	6
08:15	0	0	0	0	0	0	0	0	4	4	0	0	0	0	0	0	0	0	0	0	4
Total Volume	0	2	0	0	2	2	0	0	7	9	0	8	0	0	8	0	0	0	0	0	19
% App. Total	0	100	0	0		22.2	0	0	77.8		0	100	0	0		0	0	0	0		
PHF	.000	.500	.000	.000	.500	.500	.000	.000	.438	.563	.000	.500	.000	.000	.500	.000	.000	.000	.000	.000	.792

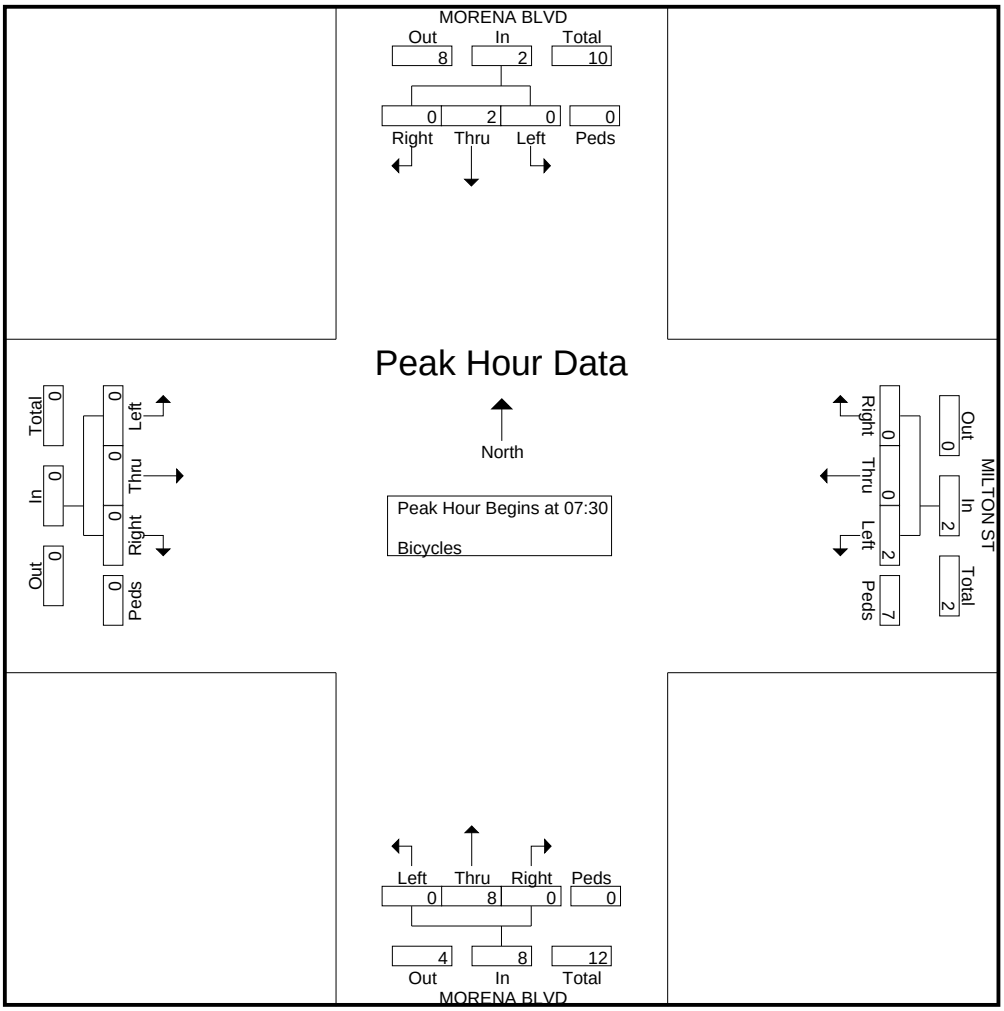

True Count

6520 Lemarand Ave
San Diego, CA 92115

File Name : 07.MORENA BLVD.MILTON ST.PED-BIKE
Site Code : 00000000
Start Date : 2/6/2013
Page No : 3

	MORENA BLVD Southbound					MILTON ST Westbound					MORENA BLVD Northbound					Eastbound					
Start Time	**Left**	**Thru**	**Right**	**Peds**	**App. Total**	**Left**	**Thru**	**Right**	**Peds**	**App. Total**	**Left**	**Thru**	**Right**	**Peds**	**App. Total**	**Left**	**Thru**	**Right**	**Peds**	**App. Total**	**Int. Total**
Peak Hour Analysis From 12:00 to 17:45 - Peak 1 of 1																					
Peak Hour for Entire Intersection Begins at 17:00																					
17:00	0	0	0	0	0	0	0	0	2	2	0	1	0	0	1	0	0	0	0	0	3
17:15	0	1	0	0	1	0	0	0	1	1	0	1	0	0	1	0	0	0	0	0	3
17:30	0	1	0	0	1	0	0	0	1	1	0	1	0	0	1	0	0	0	0	0	3
17:45	0	2	0	0	2	0	0	0	0	0	0	2	0	0	2	0	0	0	0	0	4
Total Volume	0	4	0	0	4	0	0	0	4	4	0	5	0	0	5	0	0	0	0	0	13
% App. Total	0	100	0	0		0	0	0	100		0	100	0	0		0	0	0	0		
PHF	.000	.500	.000	.000	.500	.000	.000	.000	.500	.500	.000	.625	.000	.000	.625	.000	.000	.000	.000	.000	.813

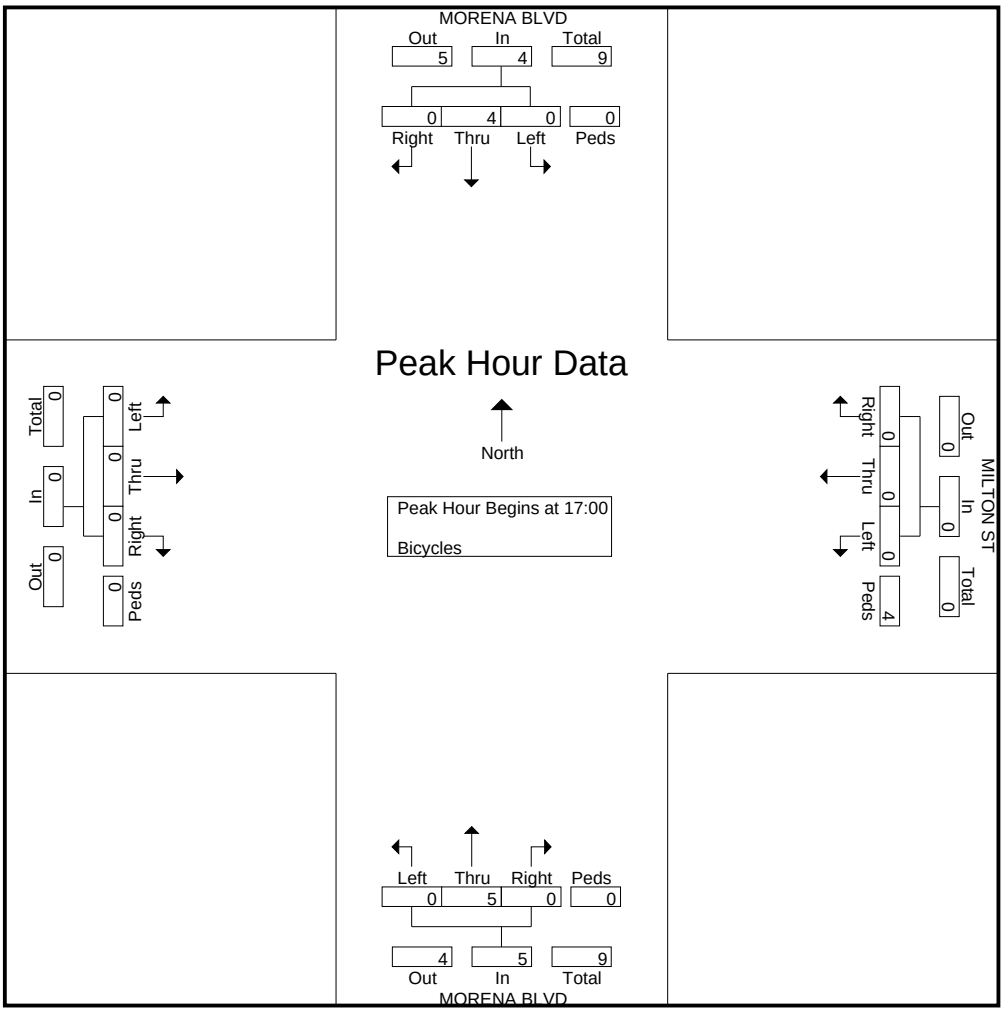

True Count

6520 Lemarand Ave
San Diego, CA 92115

File Name : 08.MORENA BLVD.ASHTON ST.PED-BIKE
Site Code : 00000000
Start Date : 2/6/2013
Page No : 1

Groups Printed- Bicycles

	MORENA BLVD Southbound				ASHTON ST Westbound				MORENA BLVD Northbound				Eastbound				
Start Time	Left	Thru	Right	Peds	Left	Thru	Right	Peds	Left	Thru	Right	Peds	Left	Thru	Right	Peds	Int. Total
07:00	0	4	0	0	0	0	0	0	0	0	0	0	0	0	0	0	4
07:15	0	2	0	0	0	0	0	3	0	1	0	0	0	0	0	0	6
07:30	0	2	0	0	0	0	0	2	0	2	0	0	0	0	0	0	6
07:45	0	0	0	0	0	0	0	0	0	2	0	0	0	0	0	0	2
Total	0	8	0	0	0	0	0	5	0	5	0	0	0	0	0	0	18
08:00	0	1	0	0	0	0	0	1	0	3	0	0	0	0	0	0	5
08:15	0	0	0	0	0	0	0	1	0	0	0	0	0	0	0	0	1
08:30	0	0	0	0	0	0	0	1	0	0	0	4	0	0	0	0	5
08:45	0	0	0	0	0	0	0	0	0	2	0	1	0	0	0	0	3
Total	0	1	0	0	0	0	0	3	0	5	0	5	0	0	0	0	14
*** BREAK ***																	
16:00	0	1	0	0	0	0	0	0	0	1	0	0	0	0	0	0	2
16:15	0	3	0	0	0	0	0	2	0	0	0	0	0	0	0	0	5
*** BREAK ***																	
16:45	0	0	0	0	0	0	0	1	0	2	0	0	0	0	0	0	3
Total	0	4	0	0	0	0	0	3	0	3	0	0	0	0	0	0	10
17:00	0	0	0	0	0	0	0	1	0	0	0	0	0	0	0	0	1
17:15	0	1	0	1	0	0	0	2	0	1	0	1	0	0	0	0	6
17:30	0	1	0	0	0	0	0	1	0	2	0	0	0	0	0	0	4
17:45	0	2	0	0	0	0	0	5	0	2	0	2	0	0	0	0	11
Total	0	4	0	1	0	0	0	9	0	5	0	3	0	0	0	0	22
Grand Total	0	17	0	1	0	0	0	20	0	18	0	8	0	0	0	0	64
Apprch %	0	94.4	0	5.6	0	0	0	100	0	69.2	0	30.8	0	0	0	0	
Total %	0	26.6	0	1.6	0	0	0	31.2	0	28.1	0	12.5	0	0	0	0	

True Count

6520 Lemarand Ave
San Diego, CA 92115

File Name : 08.MORENA BLVD.ASHTON ST.PED-BIKE
Site Code : 00000000
Start Date : 2/6/2013
Page No : 2

	MORENA BLVD Southbound					ASHTON ST Westbound					MORENA BLVD Northbound					Eastbound					
Start Time	**Left**	**Thru**	**Right**	**Peds**	**App. Total**	**Left**	**Thru**	**Right**	**Peds**	**App. Total**	**Left**	**Thru**	**Right**	**Peds**	**App. Total**	**Left**	**Thru**	**Right**	**Peds**	**App. Total**	**Int. Total**
Peak Hour Analysis From 07:00 to 11:45 - Peak 1 of 1																					
Peak Hour for Entire Intersection Begins at 07:15																					
07:15	0	2	0	0	2	0	0	0	3	3	0	1	0	0	1	0	0	0	0	0	6
07:30	0	2	0	0	2	0	0	0	2	2	0	2	0	0	2	0	0	0	0	0	6
07:45	0	0	0	0	0	0	0	0	0	0	0	2	0	0	2	0	0	0	0	0	2
08:00	0	1	0	0	1	0	0	0	1	1	0	3	0	0	3	0	0	0	0	0	5
Total Volume	0	5	0	0	5	0	0	0	6	6	0	8	0	0	8	0	0	0	0	0	19
% App. Total	0	100	0	0		0	0	0	100		0	100	0	0		0	0	0	0		
PHF	.000	.625	.000	.000	.625	.000	.000	.000	.500	.500	.000	.667	.000	.000	.667	.000	.000	.000	.000	.000	.792

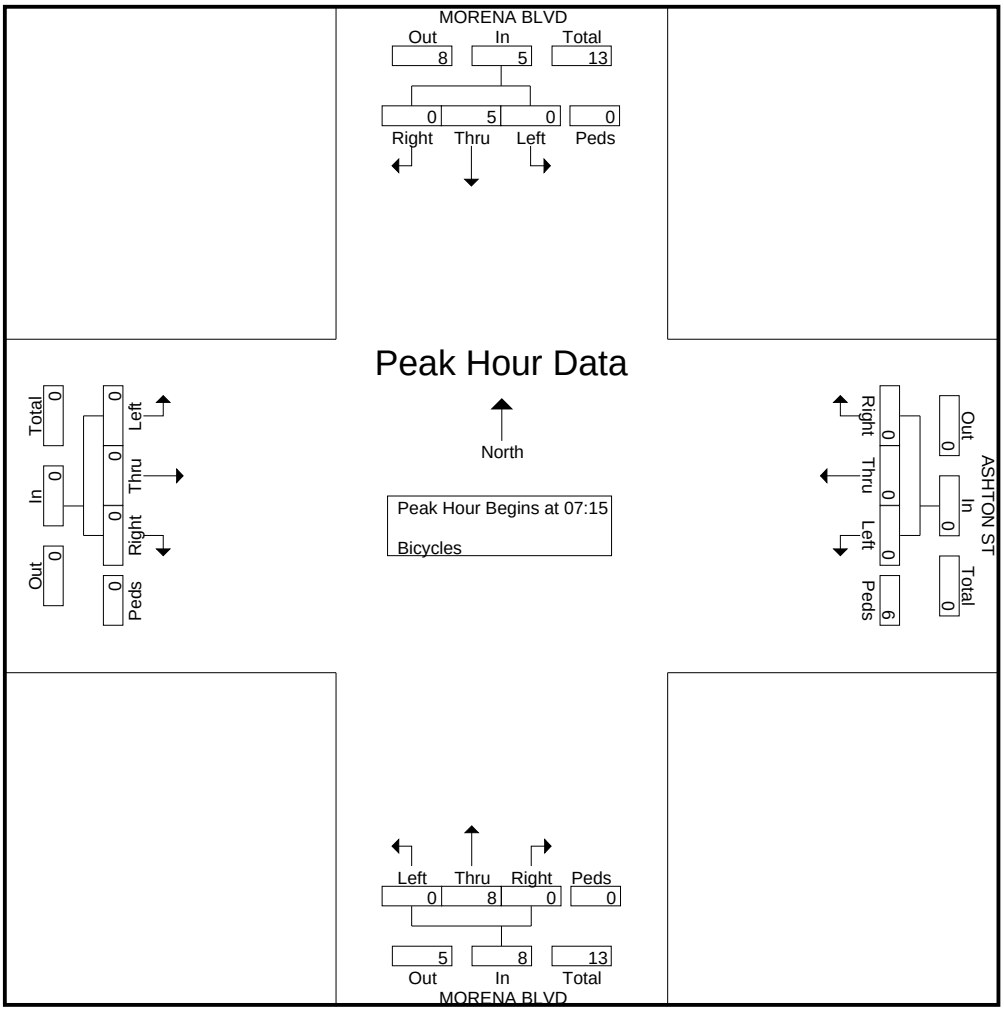

True Count

6520 Lemarand Ave
San Diego, CA 92115

File Name : 08.MORENA BLVD.ASHTON ST.PED-BIKE
Site Code : 00000000
Start Date : 2/6/2013
Page No : 3

	MORENA BLVD Southbound					ASHTON ST Westbound					MORENA BLVD Northbound					Eastbound					
Start Time	**Left**	**Thru**	**Right**	**Peds**	**App. Total**	**Left**	**Thru**	**Right**	**Peds**	**App. Total**	**Left**	**Thru**	**Right**	**Peds**	**App. Total**	**Left**	**Thru**	**Right**	**Peds**	**App. Total**	**Int. Total**
Peak Hour Analysis From 12:00 to 17:45 - Peak 1 of 1																					
Peak Hour for Entire Intersection Begins at 17:00																					
17:00	0	0	0	0	0	0	0	0	1	1	0	0	0	0	0	0	0	0	0	0	1
17:15	0	1	0	1	2	0	0	0	2	2	0	1	0	1	2	0	0	0	0	0	6
17:30	0	1	0	0	1	0	0	0	1	1	0	2	0	0	2	0	0	0	0	0	4
17:45	0	2	0	0	2	0	0	0	5	5	0	2	0	2	4	0	0	0	0	0	11
Total Volume	0	4	0	1	5	0	0	0	9	9	0	5	0	3	8	0	0	0	0	0	22
% App. Total	0	80	0	20		0	0	0	100		0	62.5	0	37.5		0	0	0	0		
PHF	.000	.500	.000	.250	.625	.000	.000	.000	.450	.450	.000	.625	.000	.375	.500	.000	.000	.000	.000	.000	.500

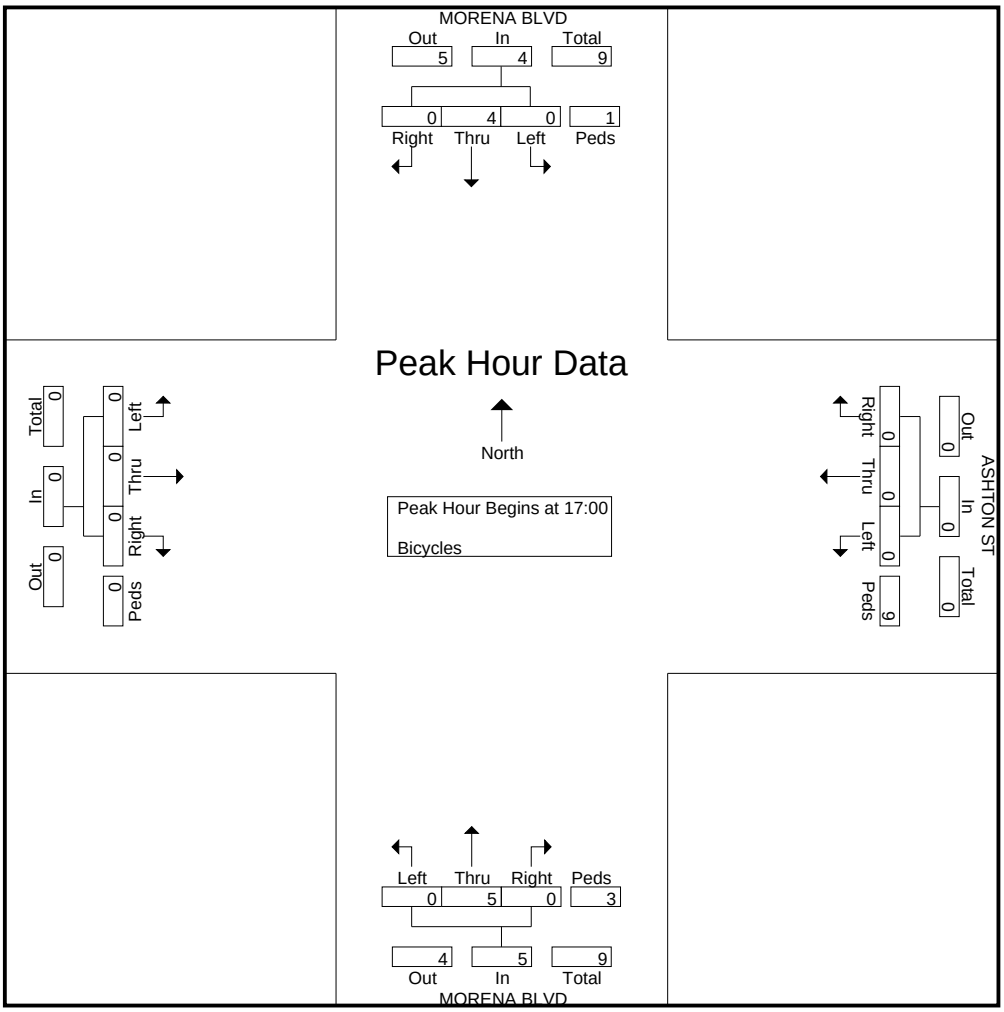

True Count

6520 Lemarand Ave
San Diego, CA 92115

File Name : 09.MORENA BLVD.WEST MORENA BLVD (NORTH).PED-BIKE
Site Code : 00000000
Start Date : 2/6/2013
Page No : 1

Groups Printed- Bicycles

	MORENA BLVD Southbound				MORENA BLVD Westbound				WEST MORENA BLVD Northbound				Eastbound				
Start Time	Left	Thru	Right	Peds	Left	Thru	Right	Peds	Left	Thru	Right	Peds	Left	Thru	Right	Peds	Int. Total
07:00	0	2	0	0	0	0	0	0	0	0	0	0	0	0	0	0	2
07:15	0	2	0	0	0	0	0	0	0	2	0	0	0	0	0	0	4
07:30	0	2	0	0	0	0	0	0	0	1	0	0	0	0	0	0	3
07:45	0	1	0	0	0	0	0	0	0	0	0	0	0	0	0	0	1
Total	0	7	0	0	0	0	0	0	0	3	0	0	0	0	0	0	10
08:00	0	0	0	0	0	0	1	0	0	2	0	0	0	0	0	0	3
08:15	0	2	0	0	0	0	0	1	0	2	0	0	0	0	0	0	5
08:30	0	1	0	0	0	0	0	0	0	0	0	0	0	0	0	0	1
*** BREAK ***																	
Total	0	3	0	0	0	0	1	1	0	4	0	0	0	0	0	0	9
*** BREAK ***																	
16:00	2	1	0	0	0	0	0	1	0	1	0	0	0	0	0	0	5
16:15	0	2	0	0	0	0	0	0	0	0	0	0	0	0	0	0	2
*** BREAK ***																	
16:45	0	0	0	0	0	0	1	0	0	1	0	0	0	0	0	0	2
Total	2	3	0	0	0	0	1	1	0	2	0	0	0	0	0	0	9
17:00	0	0	0	0	0	0	1	0	0	0	0	0	0	0	0	0	1
17:15	0	1	0	0	0	0	0	0	0	0	0	0	0	0	0	0	1
17:30	1	1	0	0	0	0	1	0	0	1	0	0	0	0	0	0	4
17:45	0	3	0	0	0	0	0	0	0	1	0	0	0	0	0	0	4
Total	1	5	0	0	0	0	2	0	0	2	0	0	0	0	0	0	10
Grand Total	3	18	0	0	0	0	4	2	0	11	0	0	0	0	0	0	38
Apprch %	14.3	85.7	0	0	0	0	66.7	33.3	0	100	0	0	0	0	0	0	
Total %	7.9	47.4	0	0	0	0	10.5	5.3	0	28.9	0	0	0	0	0	0	

True Count

6520 Lemarand Ave
San Diego, CA 92115

File Name : 09.MORENA BLVD.WEST MORENA BLVD (NORTH).PED-BIKE
Site Code : 00000000
Start Date : 2/6/2013
Page No : 2

	MORENA BLVD Southbound					MORENA BLVD Westbound					WEST MORENA BLVD Northbound					Eastbound					
Start Time	**Left**	**Thru**	**Right**	**Peds**	**App. Total**	**Left**	**Thru**	**Right**	**Peds**	**App. Total**	**Left**	**Thru**	**Right**	**Peds**	**App. Total**	**Left**	**Thru**	**Right**	**Peds**	**App. Total**	**Int. Total**
Peak Hour Analysis From 07:00 to 11:45 - Peak 1 of 1																					
Peak Hour for Entire Intersection Begins at 07:30																					
07:30	0	2	0	0	2	0	0	0	0	0	0	1	0	0	1	0	0	0	0	0	3
07:45	0	1	0	0	1	0	0	0	0	0	0	0	0	0	0	0	0	0	0	0	1
08:00	0	0	0	0	0	0	0	1	0	1	0	2	0	0	2	0	0	0	0	0	3
08:15	0	2	0	0	2	0	0	0	1	1	0	2	0	0	2	0	0	0	0	0	5
Total Volume	0	5	0	0	5	0	0	1	1	2	0	5	0	0	5	0	0	0	0	0	12
% App. Total	0	100	0	0		0	0	50	50		0	100	0	0		0	0	0	0		
PHF	.000	.625	.000	.000	.625	.000	.000	.250	.250	.500	.000	.625	.000	.000	.625	.000	.000	.000	.000	.000	.600

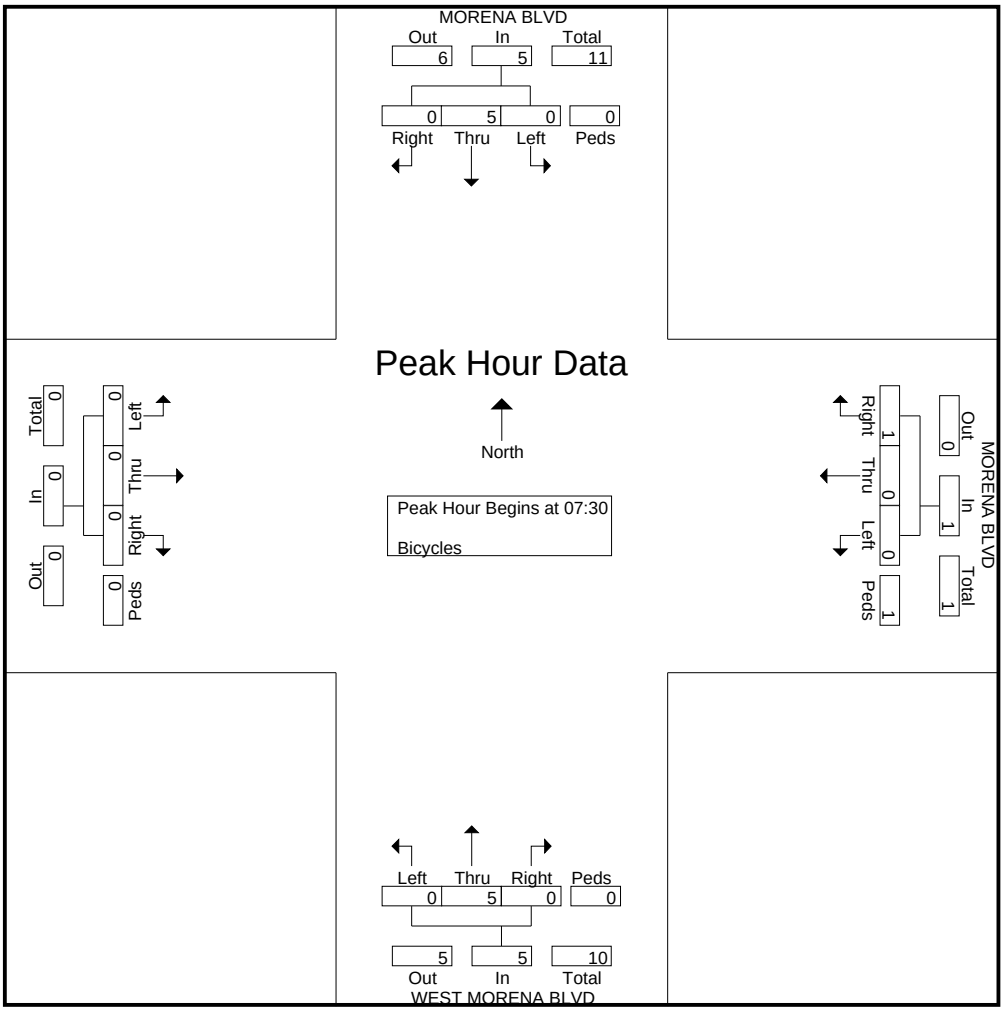

True Count

6520 Lemarand Ave
San Diego, CA 92115

File Name : 09.MORENA BLVD.WEST MORENA BLVD (NORTH).PED-BIKE
Site Code : 00000000
Start Date : 2/6/2013
Page No : 3

	MORENA BLVD Southbound					MORENA BLVD Westbound					WEST MORENA BLVD Northbound					Eastbound					
Start Time	Left	Thru	Right	Peds	App. Total	Left	Thru	Right	Peds	App. Total	Left	Thru	Right	Peds	App. Total	Left	Thru	Right	Peds	App. Total	Int. Total
Peak Hour Analysis From 12:00 to 17:45 - Peak 1 of 1																					
Peak Hour for Entire Intersection Begins at 17:00																					
17:00	0	0	0	0	0	0	0	1	0	1	0	0	0	0	0	0	0	0	0	0	1
17:15	0	1	0	0	1	0	0	0	0	0	0	0	0	0	0	0	0	0	0	0	1
17:30	1	1	0	0	2	0	0	1	0	1	0	1	0	0	1	0	0	0	0	0	4
17:45	0	3	0	0	3	0	0	0	0	0	0	1	0	0	1	0	0	0	0	0	4
Total Volume	1	5	0	0	6	0	0	2	0	2	0	2	0	0	2	0	0	0	0	0	10
% App. Total	16.7	83.3	0	0		0	0	100	0		0	100	0	0		0	0	0	0		
PHF	.250	.417	.000	.000	.500	.000	.000	.500	.000	.500	.000	.500	.000	.000	.500	.000	.000	.000	.000	.000	.625

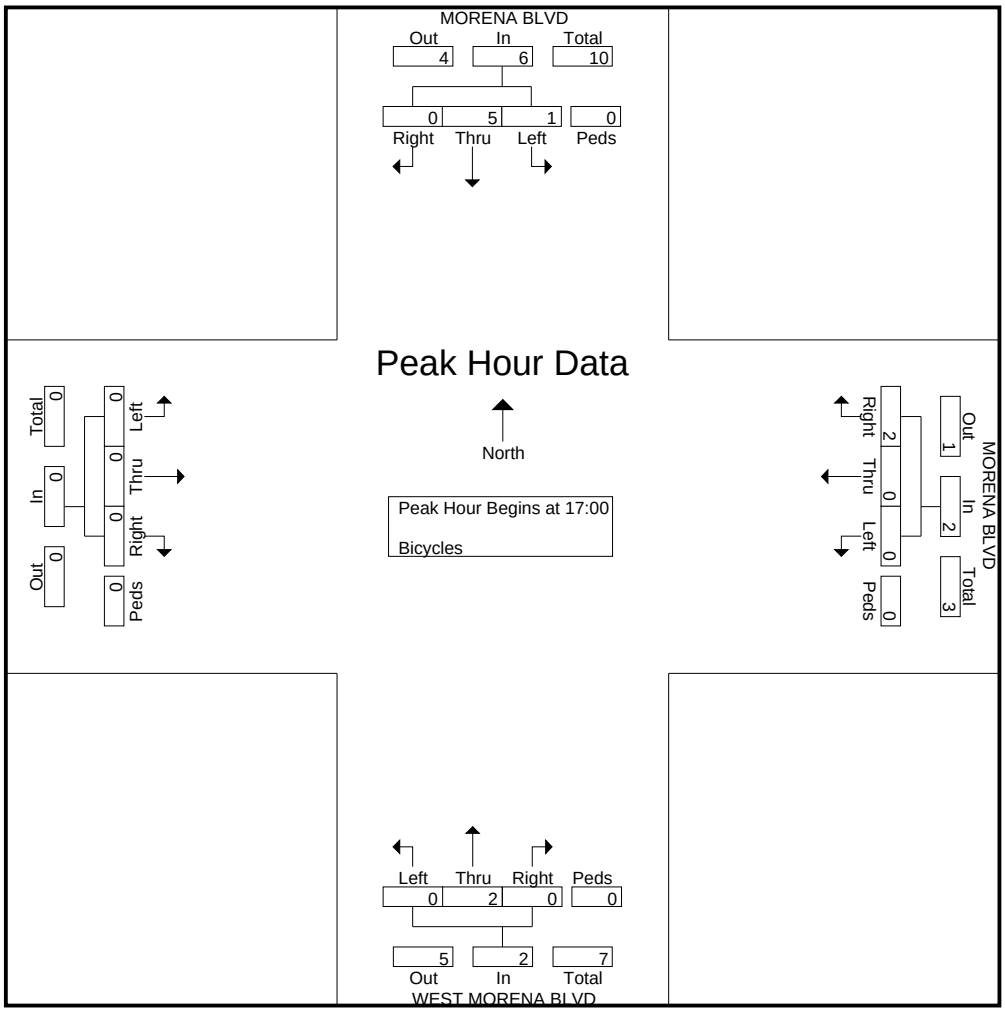

True Count

6520 Lemarand Ave
San Diego, CA 92115

File Name : 10.MORENA BLVD.KNOXVILLE ST.PED-BIKE
Site Code : 00000000
Start Date : 2/6/2013
Page No : 1

Groups Printed- Bicycles

	MORENA BLVD Southbound				KNOXVILLE ST Westbound				MORENA BLVD Northbound				KNOXVILLE ST Eastbound				
Start Time	Left	Thru	Right	Peds	Left	Thru	Right	Peds	Left	Thru	Right	Peds	Left	Thru	Right	Peds	Int. Total
07:00	0	1	0	2	0	0	0	2	0	2	0	0	0	0	0	0	7
07:15	0	0	0	1	0	0	0	3	0	0	0	0	0	0	0	0	4
07:30	0	0	0	0	0	1	0	4	0	0	0	0	0	0	0	0	5
07:45	1	1	0	3	0	2	0	2	0	2	0	1	0	0	0	1	13
Total	1	2	0	6	0	3	0	11	0	4	0	1	0	0	0	1	29
08:00	0	0	0	1	0	0	0	2	0	0	0	0	0	0	0	1	4
08:15	0	0	0	0	0	0	0	7	0	0	0	0	0	0	0	0	7
08:30	0	0	0	0	2	1	0	2	0	0	2	0	0	0	0	0	7
08:45	0	0	0	4	0	0	0	2	0	2	1	0	0	0	1	1	11
Total	0	0	0	5	2	1	0	13	0	2	3	0	0	0	1	2	29
*** BREAK ***																	
16:00	0	2	0	3	0	0	1	2	0	0	0	1	0	0	0	0	9
16:15	0	0	0	1	0	0	0	0	0	1	0	3	0	0	0	0	5
16:30	0	1	0	4	0	0	0	0	0	0	0	5	0	0	0	0	10
16:45	0	0	0	0	0	0	0	3	0	1	1	3	0	0	0	1	9
Total	0	3	0	8	0	0	1	5	0	2	1	12	0	0	0	1	33
17:00	0	0	0	3	2	1	0	3	0	3	0	0	0	1	0	0	13
17:15	0	1	0	1	0	0	0	0	0	0	1	0	0	1	0	0	4
17:30	0	0	0	1	0	0	0	1	2	2	0	0	0	0	0	0	6
17:45	0	0	0	1	1	0	0	5	0	0	0	2	0	0	0	0	9
Total	0	1	0	6	3	1	0	9	2	5	1	2	0	2	0	0	32
Grand Total	1	6	0	25	5	5	1	38	2	13	5	15	0	2	1	4	123
Apprch %	3.1	18.8	0	78.1	10.2	10.2	2	77.6	5.7	37.1	14.3	42.9	0	28.6	14.3	57.1	
Total %	0.8	4.9	0	20.3	4.1	4.1	0.8	30.9	1.6	10.6	4.1	12.2	0	1.6	0.8	3.3	

True Count

6520 Lemarand Ave
San Diego, CA 92115

File Name : 10.MORENA BLVD.KNOXVILLE ST.PED-BIKE
Site Code : 00000000
Start Date : 2/6/2013
Page No : 2

	MORENA BLVD Southbound					KNOXVILLE ST Westbound					MORENA BLVD Northbound					KNOXVILLE ST Eastbound					
Start Time	**Left**	**Thru**	**Right**	**Peds**	**App. Total**	**Left**	**Thru**	**Right**	**Peds**	**App. Total**	**Left**	**Thru**	**Right**	**Peds**	**App. Total**	**Left**	**Thru**	**Right**	**Peds**	**App. Total**	**Int. Total**
Peak Hour Analysis From 07:00 to 11:45 - Peak 1 of 1																					
Peak Hour for Entire Intersection Begins at 07:45																					
07:45	1	1	0	3	5	0	2	0	2	4	0	2	0	1	3	0	0	0	1	1	13
08:00	0	0	0	1	1	0	0	0	2	2	0	0	0	0	0	0	0	0	1	1	4
08:15	0	0	0	0	0	0	0	0	7	7	0	0	0	0	0	0	0	0	0	0	7
08:30	0	0	0	0	0	2	1	0	2	5	0	0	2	0	2	0	0	0	0	0	7
Total Volume	1	1	0	4	6	2	3	0	13	18	0	2	2	1	5	0	0	0	2	2	31
% App. Total	16.7	16.7	0	66.7		11.1	16.7	0	72.2		0	40	40	20		0	0	0	100		
PHF	.250	.250	.000	.333	.300	.250	.375	.000	.464	.643	.000	.250	.250	.250	.417	.000	.000	.000	.500	.500	.596

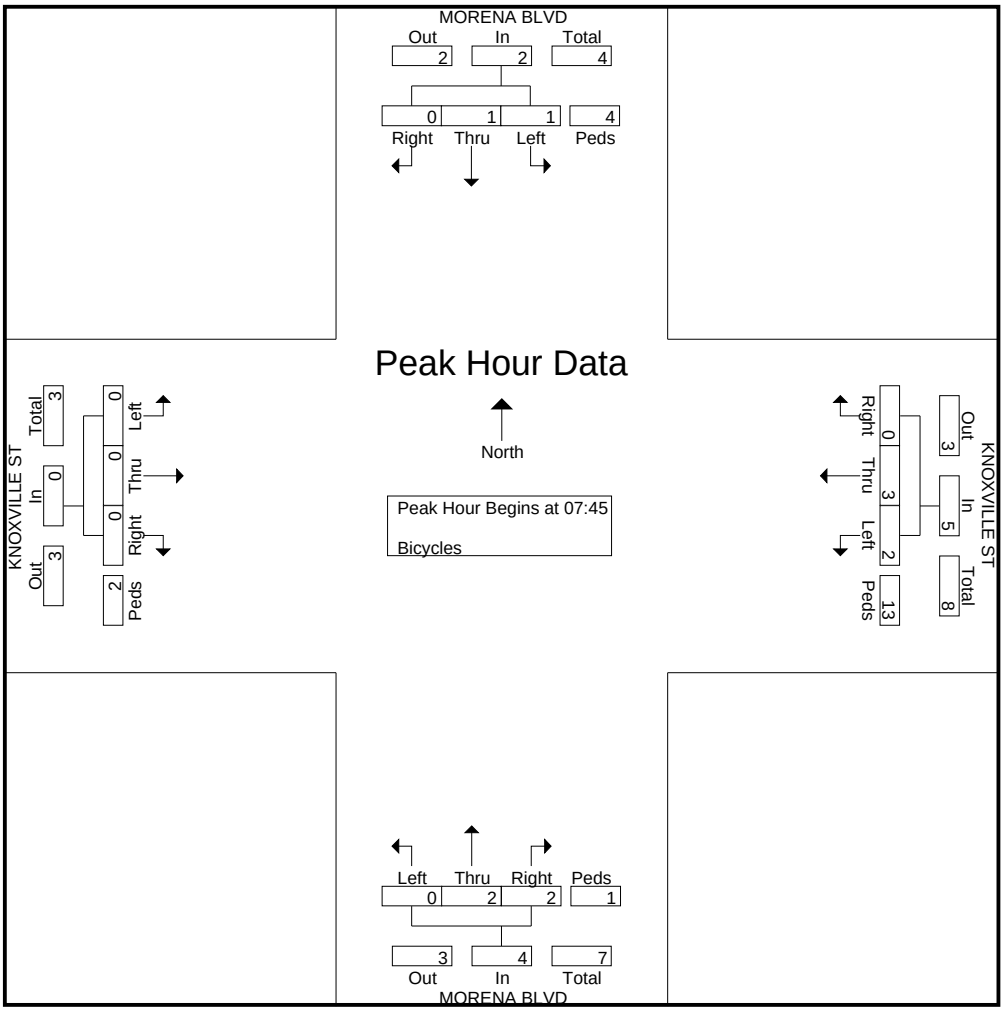

True Count

6520 Lemarand Ave
San Diego, CA 92115

File Name : 10.MORENA BLVD.KNOXVILLE ST.PED-BIKE
Site Code : 00000000
Start Date : 2/6/2013
Page No : 3

	MORENA BLVD Southbound					KNOXVILLE ST Westbound					MORENA BLVD Northbound					KNOXVILLE ST Eastbound					
Start Time	**Left**	**Thru**	**Right**	**Peds**	**App. Total**	**Left**	**Thru**	**Right**	**Peds**	**App. Total**	**Left**	**Thru**	**Right**	**Peds**	**App. Total**	**Left**	**Thru**	**Right**	**Peds**	**App. Total**	**Int. Total**
Peak Hour Analysis From 12:00 to 17:45 - Peak 1 of 1																					
Peak Hour for Entire Intersection Begins at 16:15																					
16:15	0	0	0	1	1	0	0	0	0	0	0	1	0	3	4	0	0	0	0	0	5
16:30	0	1	0	4	5	0	0	0	0	0	0	0	0	5	5	0	0	0	0	0	10
16:45	0	0	0	0	0	0	0	0	3	3	0	1	1	3	5	0	0	0	1	1	9
17:00	0	0	0	3	3	2	1	0	3	6	0	3	0	0	3	0	1	0	0	1	13
Total Volume	0	1	0	8	9	2	1	0	6	9	0	5	1	11	17	0	1	0	1	2	37
% App. Total	0	11.1	0	88.9		22.2	11.1	0	66.7		0	29.4	5.9	64.7		0	50	0	50		
PHF	.000	.250	.000	.500	.450	.250	.250	.000	.500	.375	.000	.417	.250	.550	.850	.000	.250	.000	.250	.500	.712

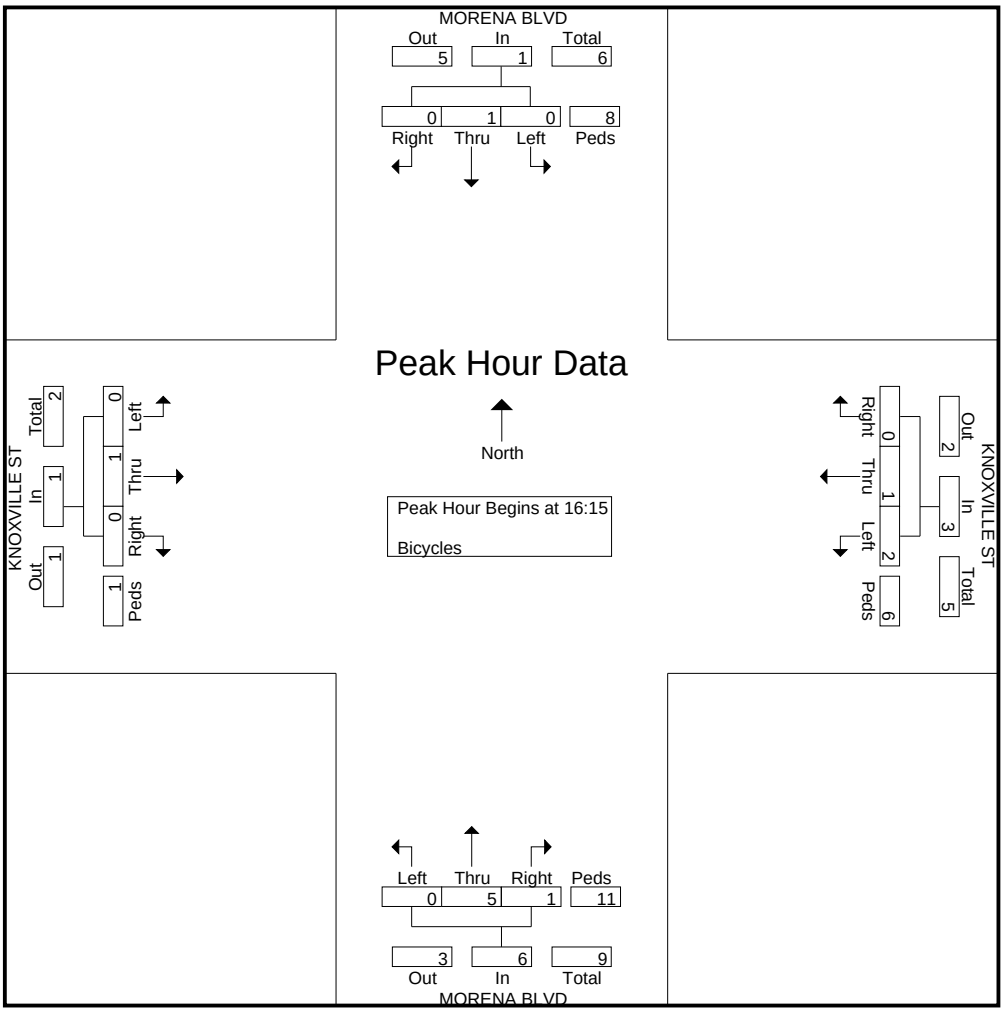

True Count

6520 Lemarand Ave
San Diego, CA 92115

File Name : 11.MORENA BLVD.TECOLOTE RD.PED-BIKE
Site Code : 00000000
Start Date : 2/6/2013
Page No : 1

Groups Printed- Bicycles

	MORENA BLVD Southbound				TECOLOTE RD Westbound				MORENA BLVD Northbound				TECOLOTE RD Eastbound				
Start Time	Left	Thru	Right	Peds	Left	Thru	Right	Peds	Left	Thru	Right	Peds	Left	Thru	Right	Peds	Int. Total
07:00	0	0	0	2	0	0	0	2	0	1	0	1	0	0	1	0	7
07:15	0	0	0	0	0	0	0	3	0	0	0	0	0	0	0	0	3
07:30	0	1	0	2	0	0	0	2	0	0	0	0	0	0	0	0	5
07:45	0	0	1	1	0	0	0	3	0	3	0	0	0	0	0	0	8
Total	0	1	1	5	0	0	0	10	0	4	0	1	0	0	1	0	23
08:00	0	0	0	1	0	0	0	3	0	0	1	0	0	0	0	0	5
08:15	0	1	0	0	0	0	0	4	0	0	0	0	0	0	1	0	6
08:30	1	0	0	3	1	0	0	2	0	2	0	0	0	0	1	0	10
08:45	0	0	0	2	0	0	0	0	1	2	0	0	0	0	0	0	5
Total	1	1	0	6	1	0	0	9	1	4	1	0	0	0	2	0	26
*** BREAK ***																	
16:00	0	2	0	1	0	0	0	3	0	0	0	0	0	0	0	0	6
16:15	0	0	0	0	0	0	0	0	0	1	0	0	1	0	0	0	2
16:30	0	1	0	2	0	0	0	3	0	0	0	0	0	0	0	0	6
16:45	0	0	0	3	0	0	0	6	1	3	1	1	0	0	0	0	15
Total	0	3	0	6	0	0	0	12	1	4	1	1	1	0	0	0	29
17:00	0	1	0	2	0	0	0	4	0	2	0	2	0	1	0	0	12
17:15	0	0	0	3	0	0	0	1	0	0	0	0	0	0	1	0	5
17:30	0	0	0	0	0	0	0	0	0	1	0	0	2	0	0	0	3
17:45	0	1	0	0	0	0	0	1	0	0	0	0	0	0	0	0	2
Total	0	2	0	5	0	0	0	6	0	3	0	2	2	1	1	0	22
Grand Total	1	7	1	22	1	0	0	37	2	15	2	4	3	1	4	0	100
Apprch %	3.2	22.6	3.2	71	2.6	0	0	97.4	8.7	65.2	8.7	17.4	37.5	12.5	50	0	
Total %	1	7	1	22	1	0	0	37	2	15	2	4	3	1	4	0	

True Count

6520 Lemarand Ave
San Diego, CA 92115

File Name : 11.MORENA BLVD.TECOLOTE RD.PED-BIKE
Site Code : 00000000
Start Date : 2/6/2013
Page No : 2

	MORENA BLVD Southbound					TECOLOTE RD Westbound					MORENA BLVD Northbound					TECOLOTE RD Eastbound					
Start Time	**Left**	**Thru**	**Right**	**Peds**	**App. Total**	**Left**	**Thru**	**Right**	**Peds**	**App. Total**	**Left**	**Thru**	**Right**	**Peds**	**App. Total**	**Left**	**Thru**	**Right**	**Peds**	**App. Total**	**Int. Total**
Peak Hour Analysis From 07:00 to 11:45 - Peak 1 of 1																					
Peak Hour for Entire Intersection Begins at 07:45																					
07:45	0	0	1	1	2	0	0	0	3	3	0	3	0	0	3	0	0	0	0	0	8
08:00	0	0	0	1	1	0	0	0	3	3	0	0	1	0	1	0	0	0	0	0	5
08:15	0	1	0	0	1	0	0	0	4	4	0	0	0	0	0	0	0	1	0	1	6
08:30	1	0	0	3	4	1	0	0	2	3	0	2	0	0	2	0	0	1	0	1	10
Total Volume	1	1	1	5	8	1	0	0	12	13	0	5	1	0	6	0	0	2	0	2	29
% App. Total	12.5	12.5	12.5	62.5		7.7	0	0	92.3		0	83.3	16.7	0		0	0	100	0		
PHF	.250	.250	.250	.417	.500	.250	.000	.000	.750	.813	.000	.417	.250	.000	.500	.000	.000	.500	.000	.500	.725

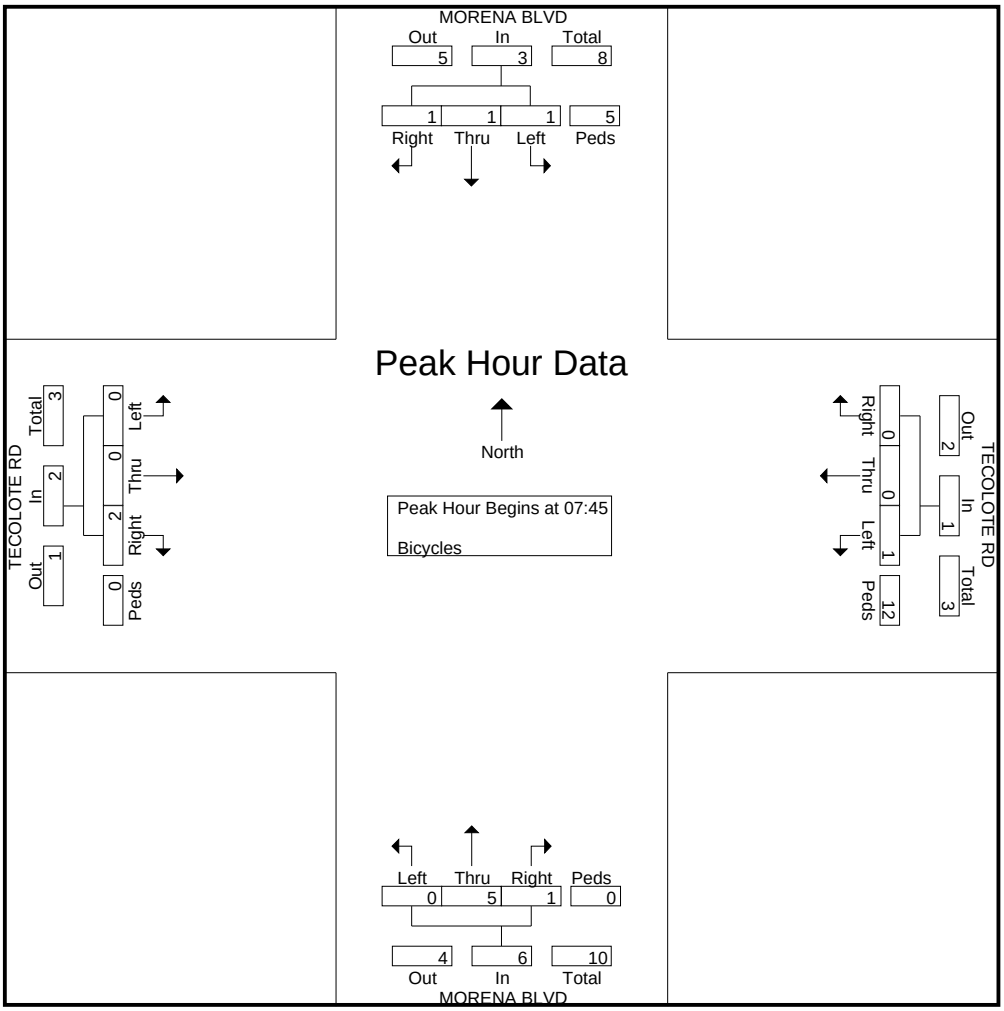

True Count

6520 Lemarand Ave
San Diego, CA 92115

File Name : 11.MORENA BLVD.TECOLOTE RD.PED-BIKE
Site Code : 00000000
Start Date : 2/6/2013
Page No : 3

	MORENA BLVD Southbound					TECOLOTE RD Westbound					MORENA BLVD Northbound					TECOLOTE RD Eastbound					
Start Time	**Left**	**Thru**	**Right**	**Peds**	**App. Total**	**Left**	**Thru**	**Right**	**Peds**	**App. Total**	**Left**	**Thru**	**Right**	**Peds**	**App. Total**	**Left**	**Thru**	**Right**	**Peds**	**App. Total**	**Int. Total**
Peak Hour Analysis From 12:00 to 17:45 - Peak 1 of 1																					
Peak Hour for Entire Intersection Begins at 16:30																					
16:30	0	1	0	2	3	0	0	0	3	3	0	0	0	0	0	0	0	0	0	0	6
16:45	0	0	0	3	3	0	0	0	6	6	1	3	1	1	6	0	0	0	0	0	15
17:00	0	1	0	2	3	0	0	0	4	4	0	2	0	2	4	0	1	0	0	1	12
17:15	0	0	0	3	3	0	0	0	1	1	0	0	0	0	0	0	0	1	0	1	5
Total Volume	0	2	0	10	12	0	0	0	14	14	1	5	1	3	10	0	1	1	0	2	38
% App. Total	0	16.7	0	83.3		0	0	0	100		10	50	10	30		0	50	50	0		
PHF	.000	.500	.000	.833	1.00	.000	.000	.000	.583	.583	.250	.417	.250	.375	.417	.000	.250	.250	.000	.500	.633

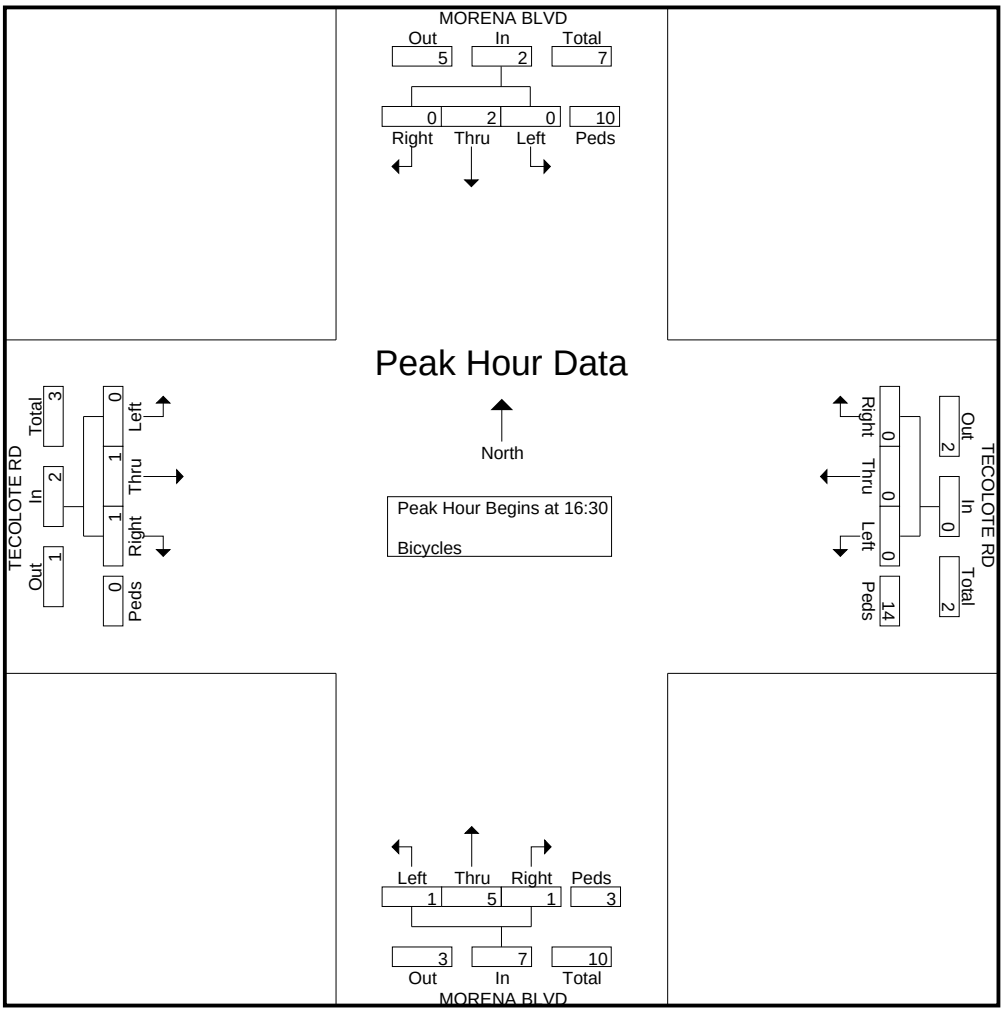

True Count

6520 Lemarand Ave
San Diego, CA 92115

File Name : 12.MORENA BLVD.SAVANNAH ST.PED-BIKE
Site Code : 00000000
Start Date : 2/5/2013
Page No : 1

Groups Printed- Bicycles

	MORENA BLVD Southbound				Westbound				MORENA BLVD Northbound				SAVANNAH ST Eastbound				
Start Time	Left	Thru	Right	Peds	Left	Thru	Right	Peds	Left	Thru	Right	Peds	Left	Thru	Right	Peds	Int. Total
07:00	0	0	0	0	0	0	0	0	0	0	0	0	0	0	0	1	1
07:15	0	1	0	1	0	0	0	0	0	2	0	0	0	0	0	0	4
07:30	0	2	0	0	0	0	0	0	0	1	0	0	0	0	0	0	3
07:45	0	0	1	0	0	0	0	0	0	1	0	0	0	0	0	1	3
Total	0	3	1	1	0	0	0	0	0	4	0	0	0	0	0	2	11
08:00	0	1	0	0	0	0	0	0	0	0	0	0	0	0	0	1	2
08:15	0	1	0	0	0	0	0	0	0	0	0	0	0	0	0	2	3
08:30	0	1	0	0	0	0	0	0	0	0	0	0	0	0	0	1	2
08:45	0	0	1	0	0	0	0	0	0	1	0	1	0	0	0	0	3
Total	0	3	1	0	0	0	0	0	0	1	0	1	0	0	0	4	10
*** BREAK ***																	
16:00	0	0	0	1	0	0	0	0	0	3	0	1	0	0	0	1	6
16:15	0	3	0	0	0	0	0	7	0	0	0	0	0	0	0	2	12
16:30	0	0	0	0	0	0	0	5	0	2	0	0	0	0	0	1	8
16:45	0	1	0	0	0	0	0	0	0	2	0	0	0	0	0	0	3
Total	0	4	0	1	0	0	0	12	0	7	0	1	0	0	0	4	29
17:00	0	0	0	0	0	0	0	6	0	2	0	0	0	0	0	0	8
17:15	0	0	0	0	0	0	0	8	0	2	0	0	0	0	0	2	12
17:30	0	3	0	0	0	0	0	1	0	1	0	0	0	0	0	0	5
17:45	0	0	0	0	0	0	0	0	0	2	0	0	0	0	0	0	2
Total	0	3	0	0	0	0	0	15	0	7	0	0	0	0	0	2	27
Grand Total	0	13	2	2	0	0	0	27	0	19	0	2	0	0	0	12	77
Apprch %	0	76.5	11.8	11.8	0	0	0	100	0	90.5	0	9.5	0	0	0	100	
Total %	0	16.9	2.6	2.6	0	0	0	35.1	0	24.7	0	2.6	0	0	0	15.6	

True Count

6520 Lemarand Ave
San Diego, CA 92115

File Name : 12.MORENA BLVD.SAVANNAH ST.PED-BIKE
Site Code : 00000000
Start Date : 2/5/2013
Page No : 2

	MORENA BLVD Southbound					Westbound					MORENA BLVD Northbound					SAVANNAH ST Eastbound					
Start Time	**Left**	**Thru**	**Right**	**Peds**	**App. Total**	**Left**	**Thru**	**Right**	**Peds**	**App. Total**	**Left**	**Thru**	**Right**	**Peds**	**App. Total**	**Left**	**Thru**	**Right**	**Peds**	**App. Total**	**Int. Total**
Peak Hour Analysis From 07:00 to 11:45 - Peak 1 of 1																					
Peak Hour for Entire Intersection Begins at 07:15																					
07:15	0	1	0	1	2	0	0	0	0	0	0	2	0	0	2	0	0	0	0	0	4
07:30	0	2	0	0	2	0	0	0	0	0	0	1	0	0	1	0	0	0	0	0	3
07:45	0	0	1	0	1	0	0	0	0	0	0	1	0	0	1	0	0	0	1	1	3
08:00	0	1	0	0	1	0	0	0	0	0	0	0	0	0	0	0	0	0	1	1	2
Total Volume	0	4	1	1	6	0	0	0	0	0	0	4	0	0	4	0	0	0	2	2	12
% App. Total	0	66.7	16.7	16.7		0	0	0	0		0	100	0	0		0	0	0	100		
PHF	.000	.500	.250	.250	.750	.000	.000	.000	.000	.000	.000	.500	.000	.000	.500	.000	.000	.000	.500	.500	.750

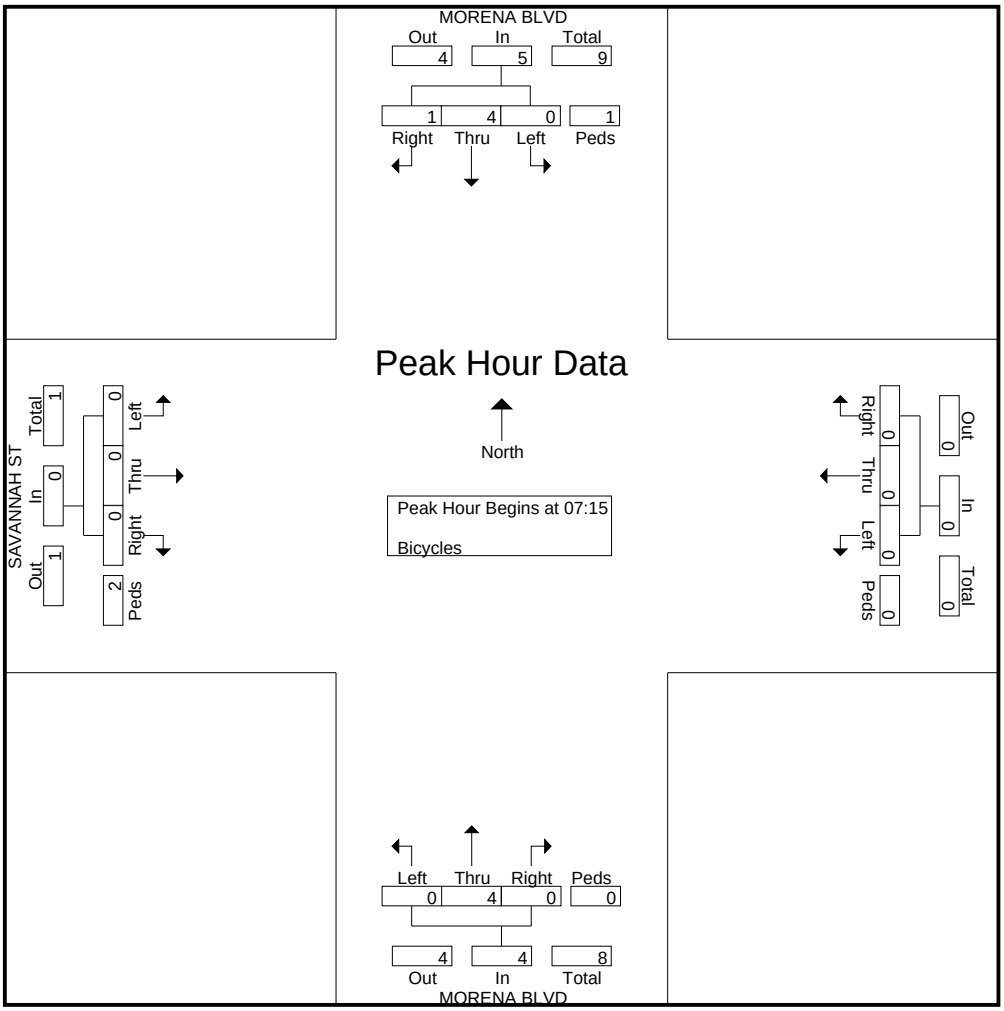

True Count

6520 Lemarand Ave
San Diego, CA 92115

File Name : 12.MORENA BLVD.SAVANNAH ST.PED-BIKE
Site Code : 00000000
Start Date : 2/5/2013
Page No : 3

	MORENA BLVD Southbound					Westbound					MORENA BLVD Northbound					SAVANNAH ST Eastbound					
Start Time	**Left**	**Thru**	**Right**	**Peds**	**App. Total**	**Left**	**Thru**	**Right**	**Peds**	**App. Total**	**Left**	**Thru**	**Right**	**Peds**	**App. Total**	**Left**	**Thru**	**Right**	**Peds**	**App. Total**	**Int. Total**
Peak Hour Analysis From 12:00 to 17:45 - Peak 1 of 1																					
Peak Hour for Entire Intersection Begins at 16:15																					
16:15	0	3	0	0	3	0	0	0	7	7	0	0	0	0	0	0	0	0	2	2	12
16:30	0	0	0	0	0	0	0	0	5	5	0	2	0	0	2	0	0	0	1	1	8
16:45	0	1	0	0	1	0	0	0	0	0	0	2	0	0	2	0	0	0	0	0	3
17:00	0	0	0	0	0	0	0	0	6	6	0	2	0	0	2	0	0	0	0	0	8
Total Volume	0	4	0	0	4	0	0	0	18	18	0	6	0	0	6	0	0	0	3	3	31
% App. Total	0	100	0	0		0	0	0	100		0	100	0	0		0	0	0	100		
PHF	.000	.333	.000	.000	.333	.000	.000	.000	.643	.643	.000	.750	.000	.000	.750	.000	.000	.000	.375	.375	.646

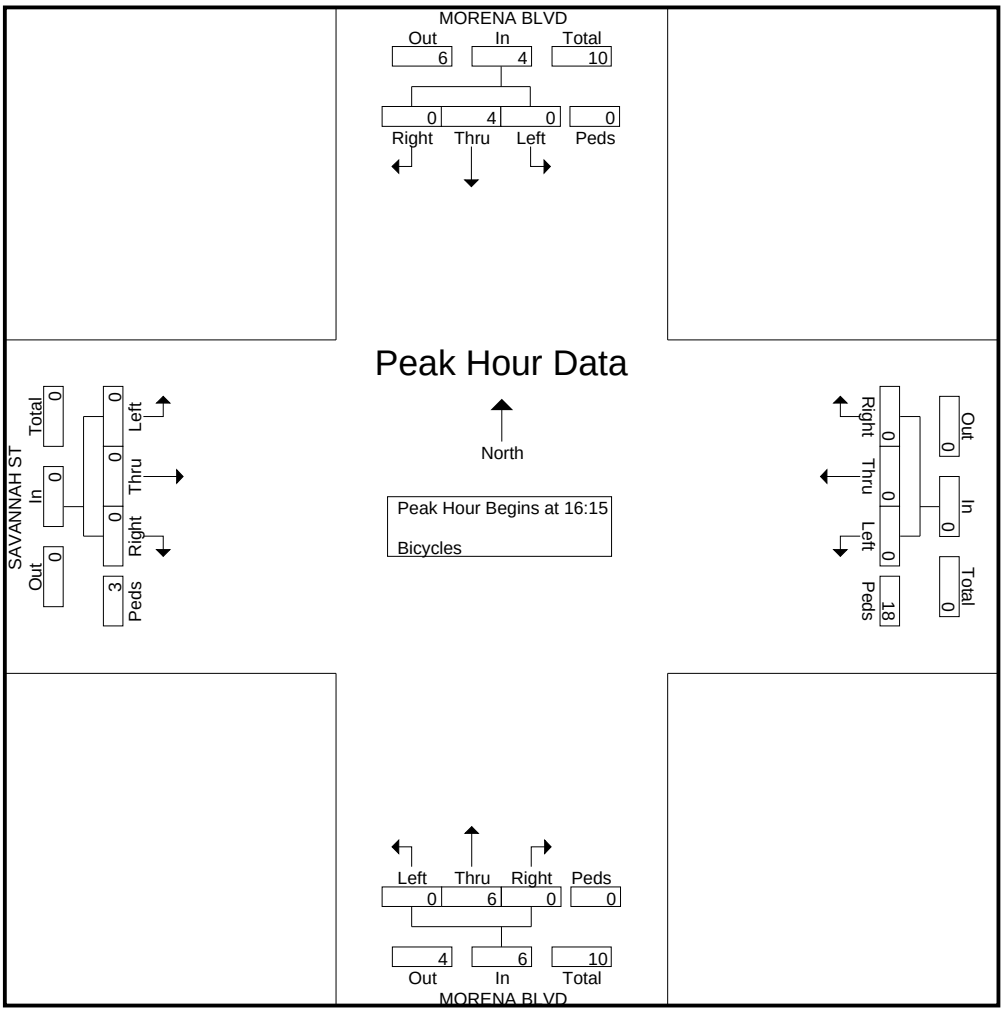

True Count

6520 Lemarand Ave
San Diego, CA 92115

File Name : 13.MORENA BLVD.BUENOS AVE.PED-BIKE
Site Code : 00000000
Start Date : 2/5/2013
Page No : 1

Groups Printed- Bicycles

	MORENA BLVD Southbound				BUENOS AVE Westbound				MORENA BLVD Northbound				BUENOS AVE Eastbound				
Start Time	Left	Thru	Right	Peds	Left	Thru	Right	Peds	Left	Thru	Right	Peds	Left	Thru	Right	Peds	Int. Total
07:00	0	0	0	1	0	1	0	2	0	0	0	0	0	0	0	0	4
07:15	0	0	0	0	0	1	0	0	0	0	0	0	0	1	0	0	2
07:30	0	0	0	1	0	1	0	0	0	0	0	2	0	1	0	2	7
07:45	0	0	0	2	0	1	0	1	0	0	0	1	0	1	1	0	7
Total	0	0	0	4	0	4	0	3	0	0	0	3	0	3	1	2	20
08:00	0	0	0	1	0	0	0	1	0	0	0	1	0	1	0	1	5
08:15	0	0	0	3	0	0	0	0	0	0	0	0	0	1	0	0	4
08:30	0	0	0	2	0	0	0	0	0	0	0	2	0	1	0	0	5
08:45	0	0	0	0	0	1	0	0	0	0	0	0	0	0	0	0	1
Total	0	0	0	6	0	1	0	1	0	0	0	3	0	3	0	1	15
*** BREAK ***																	
16:00	0	0	0	2	0	3	0	1	0	0	0	1	0	1	0	0	8
16:15	0	0	0	6	0	0	0	0	0	0	0	1	0	3	0	0	10
16:30	0	0	0	4	0	2	0	1	0	0	0	2	0	0	0	0	9
16:45	0	0	0	1	0	2	0	1	0	0	0	1	0	1	0	1	7
Total	0	0	0	13	0	7	0	3	0	0	0	5	0	5	0	1	34
17:00	0	1	0	5	0	2	0	1	1	0	0	2	0	1	0	0	13
17:15	0	0	0	2	0	2	0	0	0	0	0	2	0	0	0	0	6
17:30	0	0	0	2	0	1	0	0	0	0	0	0	0	2	0	0	5
17:45	0	0	0	0	0	1	0	0	0	0	0	0	0	0	0	0	1
Total	0	1	0	9	0	6	0	1	1	0	0	4	0	3	0	0	25
Grand Total	0	1	0	32	0	18	0	8	1	0	0	15	0	14	1	4	94
Apprch %	0	3	0	97	0	69.2	0	30.8	6.2	0	0	93.8	0	73.7	5.3	21.1	
Total %	0	1.1	0	34	0	19.1	0	8.5	1.1	0	0	16	0	14.9	1.1	4.3	

True Count

6520 Lemarand Ave
San Diego, CA 92115

File Name : 13.MORENA BLVD.BUENOS AVE.PED-BIKE
Site Code : 00000000
Start Date : 2/5/2013
Page No : 2

	MORENA BLVD Southbound					BUENOS AVE Westbound					MORENA BLVD Northbound					BUENOS AVE Eastbound					
Start Time	**Left**	**Thru**	**Right**	**Peds**	**App. Total**	**Left**	**Thru**	**Right**	**Peds**	**App. Total**	**Left**	**Thru**	**Right**	**Peds**	**App. Total**	**Left**	**Thru**	**Right**	**Peds**	**App. Total**	**Int. Total**
Peak Hour Analysis From 07:00 to 11:45 - Peak 1 of 1																					
Peak Hour for Entire Intersection Begins at 07:30																					
07:30	0	0	0	1	1	0	1	0	0	1	0	0	0	2	2	0	1	0	2	3	7
07:45	0	0	0	2	2	0	1	0	1	2	0	0	0	1	1	0	1	1	0	2	7
08:00	0	0	0	1	1	0	0	0	1	1	0	0	0	1	1	0	1	0	1	2	5
08:15	0	0	0	3	3	0	0	0	0	0	0	0	0	0	0	0	1	0	0	1	4
Total Volume	0	0	0	7	7	0	2	0	2	4	0	0	0	4	4	0	4	1	3	8	23
% App. Total	0	0	0	100		0	50	0	50		0	0	0	100		0	50	12.5	37.5		
PHF	.000	.000	.000	.583	.583	.000	.500	.000	.500	.500	.000	.000	.000	.500	.500	.000	1.00	.250	.375	.667	.821

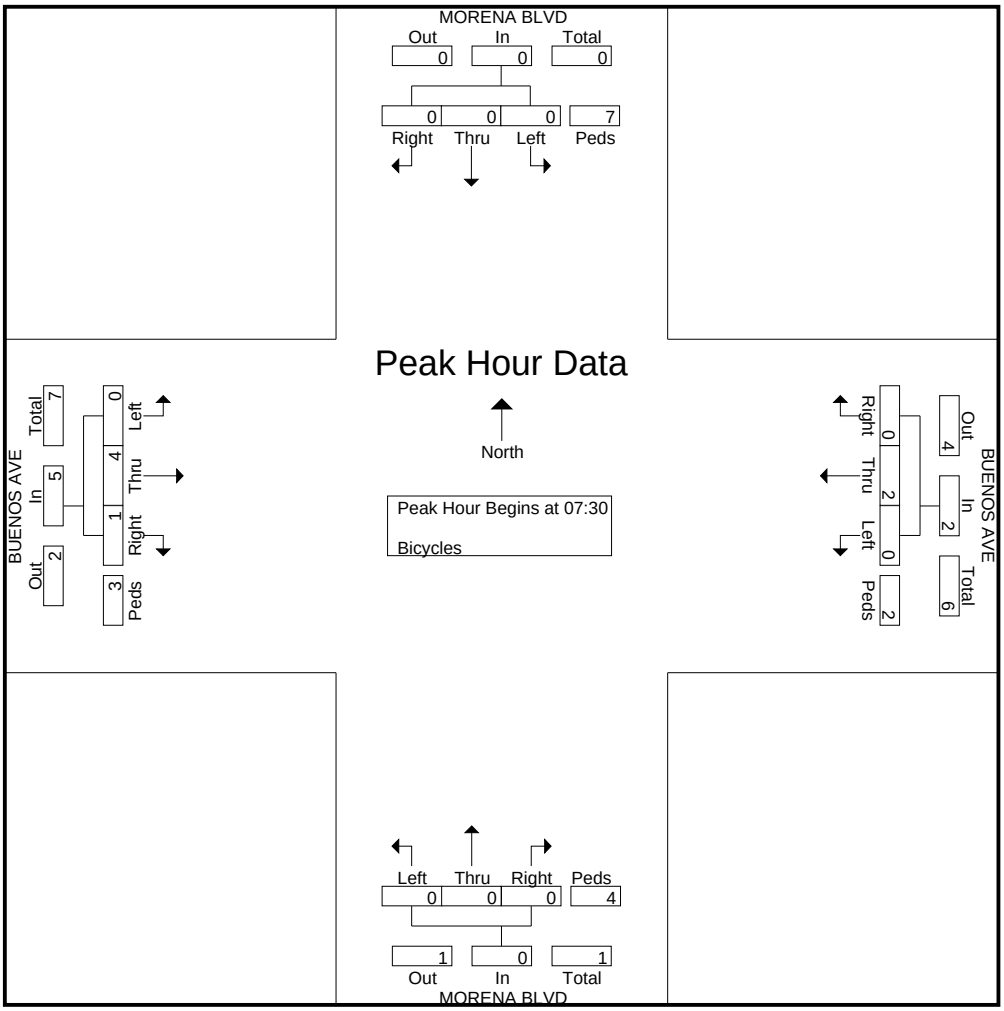

True Count

6520 Lemarand Ave
San Diego, CA 92115

File Name : 13.MORENA BLVD.BUENOS AVE.PED-BIKE
Site Code : 00000000
Start Date : 2/5/2013
Page No : 3

	MORENA BLVD Southbound					BUENOS AVE Westbound					MORENA BLVD Northbound					BUENOS AVE Eastbound					
Start Time	**Left**	**Thru**	**Right**	**Peds**	**App. Total**	**Left**	**Thru**	**Right**	**Peds**	**App. Total**	**Left**	**Thru**	**Right**	**Peds**	**App. Total**	**Left**	**Thru**	**Right**	**Peds**	**App. Total**	**Int. Total**
Peak Hour Analysis From 12:00 to 17:45 - Peak 1 of 1																					
Peak Hour for Entire Intersection Begins at 16:15																					
16:15	0	0	0	6	6	0	0	0	0	0	0	0	0	1	1	0	3	0	0	3	10
16:30	0	0	0	4	4	0	2	0	1	3	0	0	0	2	2	0	0	0	0	0	9
16:45	0	0	0	1	1	0	2	0	1	3	0	0	0	1	1	0	1	0	1	2	7
17:00	0	1	0	5	6	0	2	0	1	3	1	0	0	2	3	0	1	0	0	1	13
Total Volume	0	1	0	16	17	0	6	0	3	9	1	0	0	6	7	0	5	0	1	6	39
% App. Total	0	5.9	0	94.1		0	66.7	0	33.3		14.3	0	0	85.7		0	83.3	0	16.7		
PHF	.000	.250	.000	.667	.708	.000	.750	.000	.750	.750	.250	.000	.000	.750	.583	.000	.417	.000	.250	.500	.750

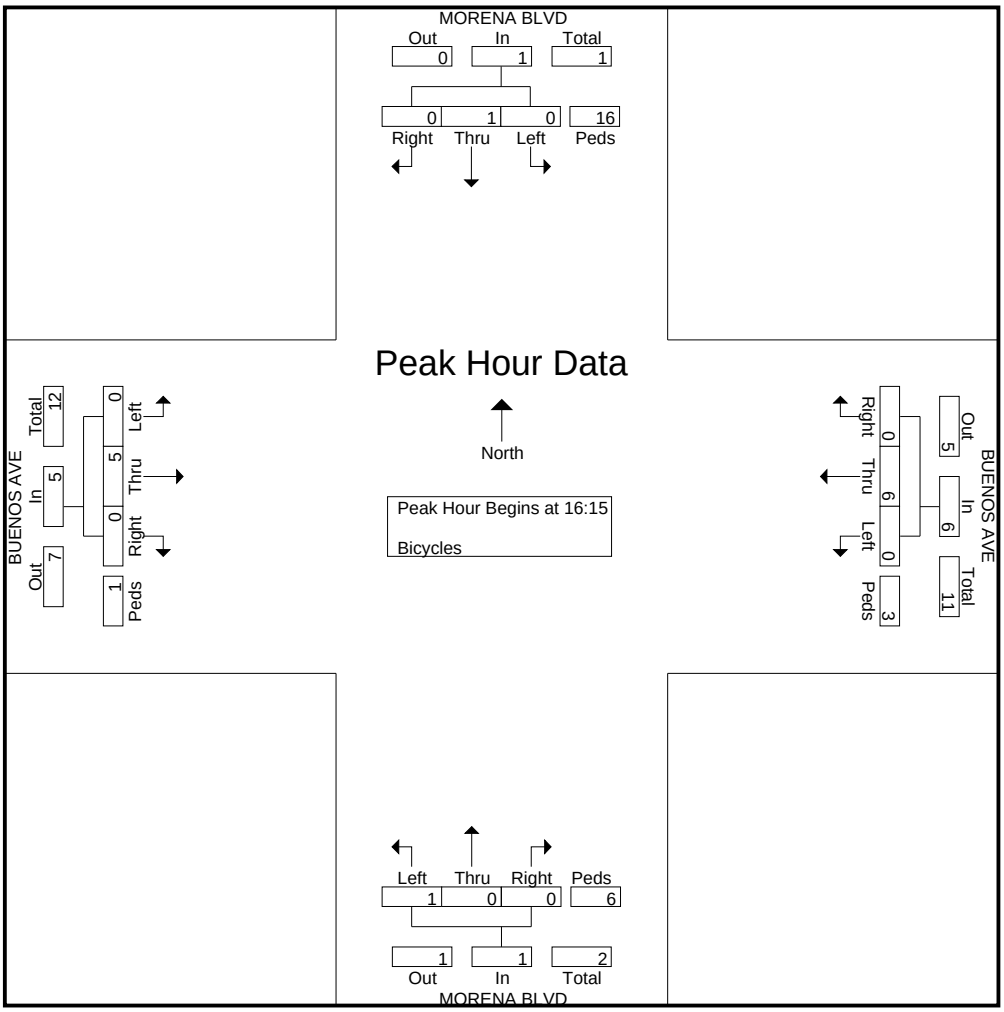

True Count

6520 Lemarand Ave
San Diego, CA 92115

File Name : 14.MORENA BLVD.WEST MORENA BLVD (SOUTH).PED-BIKE
Site Code : 00000000
Start Date : 2/5/2013
Page No : 1

Groups Printed- Bicycles

	WEST MORENA BLVD Southbound				MORENA BLVD Westbound				MORENA BLVD Northbound				Eastbound				
Start Time	Left	Thru	Right	Peds	Left	Thru	Right	Peds	Left	Thru	Right	Peds	Left	Thru	Right	Peds	Int. Total
07:00	0	2	0	0	0	0	0	0	0	0	1	0	0	0	0	0	3
07:15	0	0	0	0	0	0	0	0	0	0	1	0	0	0	0	0	1
07:30	0	2	0	0	1	0	0	0	0	1	0	0	0	0	0	0	4
07:45	0	1	0	0	0	0	0	1	0	0	2	0	0	0	0	0	4
Total	0	5	0	0	1	0	0	1	0	1	4	0	0	0	0	0	12
08:00	0	4	0	0	1	0	0	0	0	0	0	0	0	0	0	0	5
08:15	0	0	0	0	0	0	0	1	0	0	0	0	0	0	0	0	1
08:30	0	3	0	1	1	0	0	0	0	0	0	0	0	0	0	0	5
08:45	0	1	0	0	0	0	0	0	0	0	0	0	0	0	0	0	1
Total	0	8	0	1	2	0	0	1	0	0	0	0	0	0	0	0	12
*** BREAK ***																	
16:00	0	1	0	0	0	0	0	0	0	0	0	0	0	0	0	0	1
16:15	0	0	0	0	2	0	0	0	0	0	0	0	0	0	0	0	2
16:30	0	2	0	0	0	0	0	0	0	0	0	0	0	0	0	0	2
16:45	0	0	0	0	0	0	0	0	0	2	0	0	0	0	0	0	2
Total	0	3	0	0	2	0	0	0	0	2	0	0	0	0	0	0	7
17:00	0	1	0	1	0	0	0	1	0	2	0	0	0	0	0	0	5
17:15	0	2	0	0	0	0	0	0	0	2	0	0	0	0	0	0	4
17:30	0	0	0	0	2	0	0	0	0	0	0	0	0	0	0	0	2
17:45	0	0	0	0	0	0	0	0	0	1	0	0	0	0	0	0	1
Total	0	3	0	1	2	0	0	1	0	5	0	0	0	0	0	0	12
Grand Total	0	19	0	2	7	0	0	3	0	8	4	0	0	0	0	0	43
Apprch %	0	90.5	0	9.5	70	0	0	30	0	66.7	33.3	0	0	0	0	0	
Total %	0	44.2	0	4.7	16.3	0	0	7	0	18.6	9.3	0	0	0	0	0	

True Count

6520 Lemarand Ave
San Diego, CA 92115

File Name : 14.MORENA BLVD.WEST MORENA BLVD (SOUTH).PED-BIKE
Site Code : 00000000
Start Date : 2/5/2013
Page No : 2

	WEST MORENA BLVD Southbound					MORENA BLVD Westbound					MORENA BLVD Northbound					Eastbound					
Start Time	**Left**	**Thru**	**Right**	**Peds**	**App. Total**	**Left**	**Thru**	**Right**	**Peds**	**App. Total**	**Left**	**Thru**	**Right**	**Peds**	**App. Total**	**Left**	**Thru**	**Right**	**Peds**	**App. Total**	**Int. Total**
Peak Hour Analysis From 07:00 to 11:45 - Peak 1 of 1																					
Peak Hour for Entire Intersection Begins at 07:45																					
07:45	0	1	0	0	1	0	0	0	1	1	0	0	2	0	2	0	0	0	0	0	4
08:00	0	4	0	0	4	1	0	0	0	1	0	0	0	0	0	0	0	0	0	0	5
08:15	0	0	0	0	0	0	0	0	1	1	0	0	0	0	0	0	0	0	0	0	1
08:30	0	3	0	1	4	1	0	0	0	1	0	0	0	0	0	0	0	0	0	0	5
Total Volume	0	8	0	1	9	2	0	0	2	4	0	0	2	0	2	0	0	0	0	0	15
% App. Total	0	88.9	0	11.1		50	0	0	50		0	0	100	0		0	0	0	0		
PHF	.000	.500	.000	.250	.563	.500	.000	.000	.500	1.00	.000	.000	.250	.000	.250	.000	.000	.000	.000	.000	.750

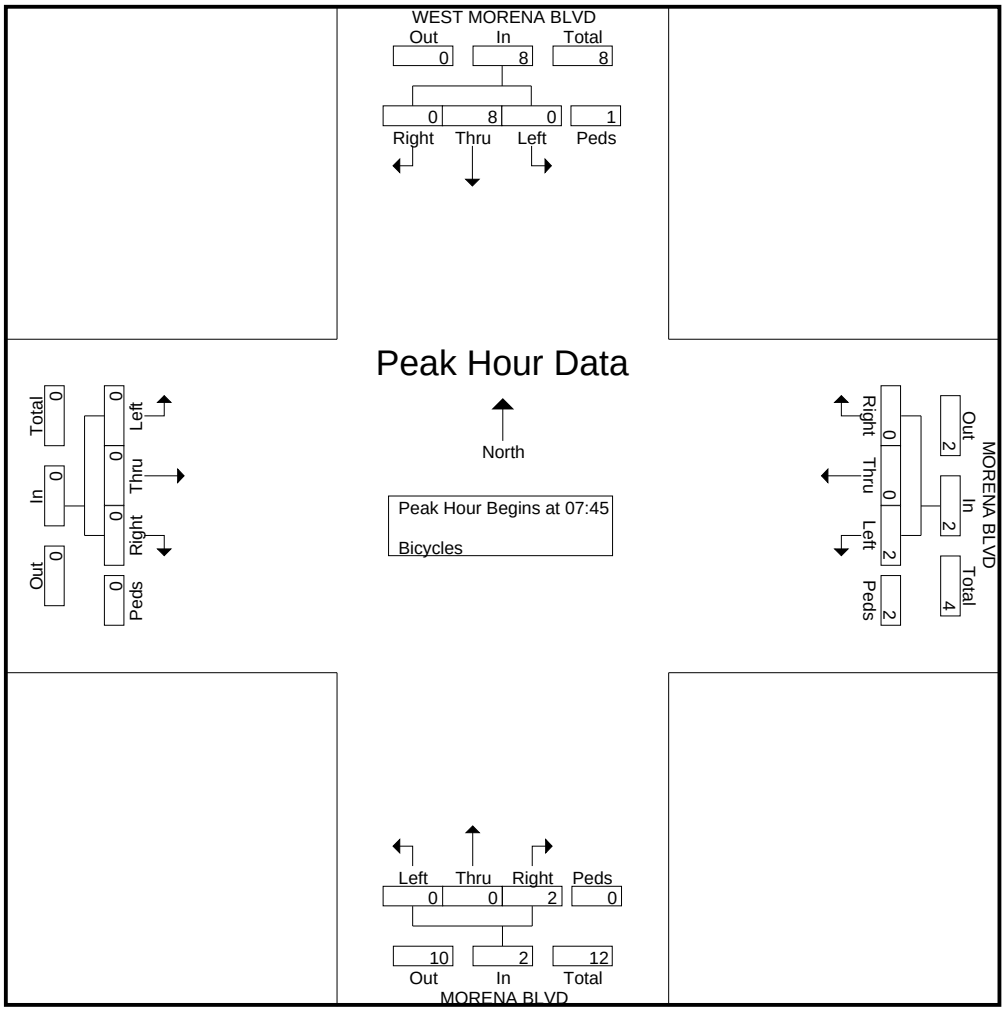

True Count

6520 Lemarand Ave
San Diego, CA 92115

File Name : 14.MORENA BLVD.WEST MORENA BLVD (SOUTH).PED-BIKE
Site Code : 00000000
Start Date : 2/5/2013
Page No : 3

	WEST MORENA BLVD Southbound					MORENA BLVD Westbound					MORENA BLVD Northbound					Eastbound					
Start Time	**Left**	**Thru**	**Right**	**Peds**	**App. Total**	**Left**	**Thru**	**Right**	**Peds**	**App. Total**	**Left**	**Thru**	**Right**	**Peds**	**App. Total**	**Left**	**Thru**	**Right**	**Peds**	**App. Total**	**Int. Total**
Peak Hour Analysis From 12:00 to 17:45 - Peak 1 of 1																					
Peak Hour for Entire Intersection Begins at 16:30																					
16:30	0	2	0	0	2	0	0	0	0	0	0	0	0	0	0	0	0	0	0	0	2
16:45	0	0	0	0	0	0	0	0	0	0	0	2	0	0	2	0	0	0	0	0	2
17:00	0	1	0	1	2	0	0	0	1	1	0	2	0	0	2	0	0	0	0	0	5
17:15	0	2	0	0	2	0	0	0	0	0	0	2	0	0	2	0	0	0	0	0	4
Total Volume	0	5	0	1	6	0	0	0	1	1	0	6	0	0	6	0	0	0	0	0	13
% App. Total	0	83.3	0	16.7		0	0	0	100		0	100	0	0		0	0	0	0		
PHF	.000	.625	.000	.250	.750	.000	.000	.000	.250	.250	.000	.750	.000	.000	.750	.000	.000	.000	.000	.000	.650

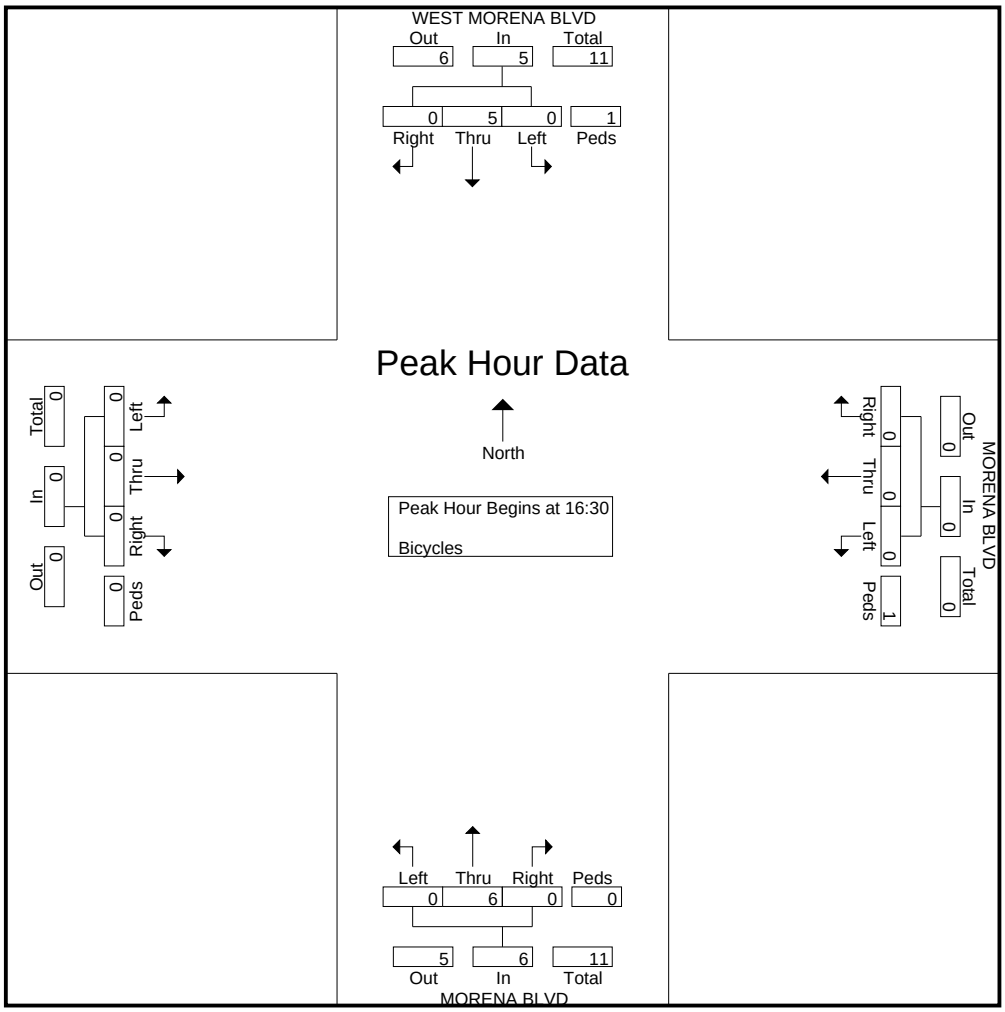

True Count

6520 Lemarand Ave
San Diego, CA 92115

File Name : 16.WEST MORENA BLVD.VEGA ST.PED-BIKE
Site Code : 00000000
Start Date : 2/6/2013
Page No : 1

Groups Printed- Bicycles

	WEST MORENA BLVD Southbound				VEGA ST Westbound				WEST MORENA BLVD Northbound				DRIVEWAY Eastbound				
Start Time	Left	Thru	Right	Peds	Left	Thru	Right	Peds	Left	Thru	Right	Peds	Left	Thru	Right	Peds	Int. Total
07:00	0	2	0	0	0	0	0	0	0	0	0	0	0	0	0	0	2
07:15	0	2	0	0	0	0	0	0	0	2	0	0	0	0	0	0	4
07:30	0	2	0	0	0	0	0	0	0	2	0	0	0	0	0	0	4
07:45	0	1	2	0	0	0	0	0	0	1	0	0	0	0	0	0	4
Total	0	7	2	0	0	0	0	0	0	5	0	0	0	0	0	0	14
08:00	0	3	1	0	0	0	0	0	0	2	0	0	0	0	0	0	6
08:15	0	0	0	0	0	0	0	1	0	0	0	0	0	0	0	1	2
08:30	0	0	1	0	0	0	0	0	0	1	0	0	1	0	0	1	4
08:45	0	0	0	0	0	0	0	0	0	1	0	0	1	0	0	0	2
Total	0	3	2	0	0	0	0	1	0	4	0	0	2	0	0	2	14
*** BREAK ***																	
16:00	0	1	0	0	0	0	0	0	0	1	0	0	0	0	0	0	2
16:15	0	1	0	0	0	0	0	0	0	0	0	0	0	0	0	0	1
16:30	0	0	1	0	0	0	0	0	0	0	0	0	0	0	0	0	1
16:45	0	0	0	0	0	0	0	0	0	1	0	0	0	0	0	0	1
Total	0	2	1	0	0	0	0	0	0	2	0	0	0	0	0	0	5
17:00	0	0	0	1	0	0	0	0	0	0	0	0	0	0	0	0	1
17:15	0	1	0	0	0	0	0	0	0	0	0	0	0	0	0	0	1
17:30	0	0	1	0	0	0	0	1	0	1	0	0	1	0	0	1	5
17:45	0	0	0	0	0	0	0	0	0	1	0	0	1	0	0	0	2
Total	0	1	1	1	0	0	0	1	0	2	0	0	2	0	0	1	9
Grand Total	0	13	6	1	0	0	0	2	0	13	0	0	4	0	0	3	42
Apprch %	0	65	30	5	0	0	0	100	0	100	0	0	57.1	0	0	42.9	
Total %	0	31	14.3	2.4	0	0	0	4.8	0	31	0	0	9.5	0	0	7.1	

True Count

6520 Lemarand Ave
San Diego, CA 92115

File Name : 16.WEST MORENA BLVD.VEGA ST.PED-BIKE
Site Code : 00000000
Start Date : 2/6/2013
Page No : 2

	WEST MORENA BLVD Southbound					VEGA ST Westbound					WEST MORENA BLVD Northbound					DRIVEWAY Eastbound					
Start Time	**Left**	**Thru**	**Right**	**Peds**	**App. Total**	**Left**	**Thru**	**Right**	**Peds**	**App. Total**	**Left**	**Thru**	**Right**	**Peds**	**App. Total**	**Left**	**Thru**	**Right**	**Peds**	**App. Total**	**Int. Total**
Peak Hour Analysis From 07:00 to 11:45 - Peak 1 of 1																					
Peak Hour for Entire Intersection Begins at 07:15																					
07:15	0	2	0	0	2	0	0	0	0	0	0	2	0	0	2	0	0	0	0	0	4
07:30	0	2	0	0	2	0	0	0	0	0	0	2	0	0	2	0	0	0	0	0	4
07:45	0	1	2	0	3	0	0	0	0	0	0	1	0	0	1	0	0	0	0	0	4
08:00	0	3	1	0	4	0	0	0	0	0	0	2	0	0	2	0	0	0	0	0	6
Total Volume	0	8	3	0	11	0	0	0	0	0	0	7	0	0	7	0	0	0	0	0	18
% App. Total	0	72.7	27.3	0		0	0	0	0		0	100	0	0		0	0	0	0		
PHF	.000	.667	.375	.000	.688	.000	.000	.000	.000	.000	.000	.875	.000	.000	.875	.000	.000	.000	.000	.000	.750

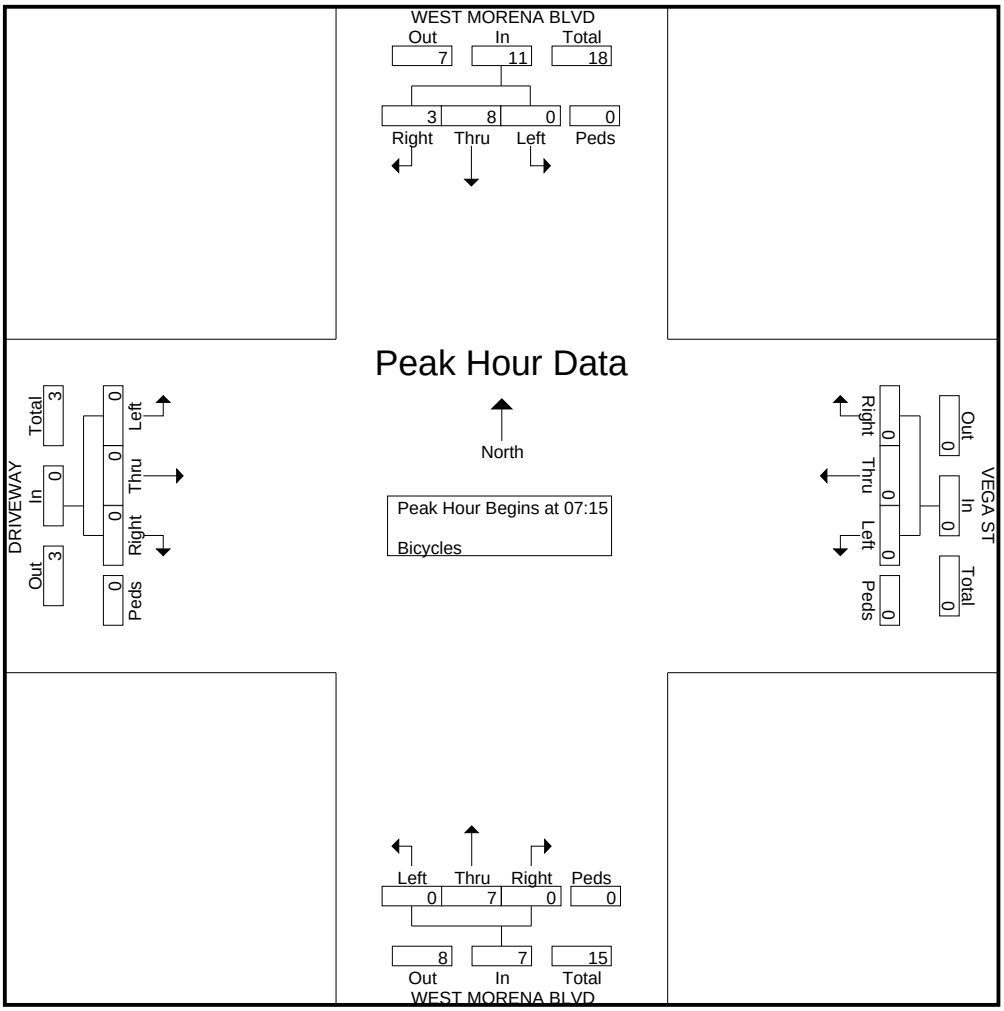

True Count

6520 Lemarand Ave
San Diego, CA 92115

File Name : 16.WEST MORENA BLVD.VEGA ST.PED-BIKE
Site Code : 00000000
Start Date : 2/6/2013
Page No : 3

	WEST MORENA BLVD Southbound					VEGA ST Westbound					WEST MORENA BLVD Northbound					DRIVEWAY Eastbound					
Start Time	**Left**	**Thru**	**Right**	**Peds**	**App. Total**	**Left**	**Thru**	**Right**	**Peds**	**App. Total**	**Left**	**Thru**	**Right**	**Peds**	**App. Total**	**Left**	**Thru**	**Right**	**Peds**	**App. Total**	**Int. Total**
Peak Hour Analysis From 12:00 to 17:45 - Peak 1 of 1																					
Peak Hour for Entire Intersection Begins at 17:00																					
17:00	0	0	0	1	1	0	0	0	0	0	0	0	0	0	0	0	0	0	0	0	1
17:15	0	1	0	0	1	0	0	0	0	0	0	0	0	0	0	0	0	0	0	0	1
17:30	0	0	1	0	1	0	0	0	1	1	0	1	0	0	1	1	0	0	1	2	5
17:45	0	0	0	0	0	0	0	0	0	0	0	1	0	0	1	1	0	0	0	1	2
Total Volume	0	1	1	1	3	0	0	0	1	1	0	2	0	0	2	2	0	0	1	3	9
% App. Total	0	33.3	33.3	33.3		0	0	0	100		0	100	0	0		66.7	0	0	33.3		
PHF	.000	.250	.250	.250	.750	.000	.000	.000	.250	.250	.000	.500	.000	.000	.500	.500	.000	.000	.250	.375	.450

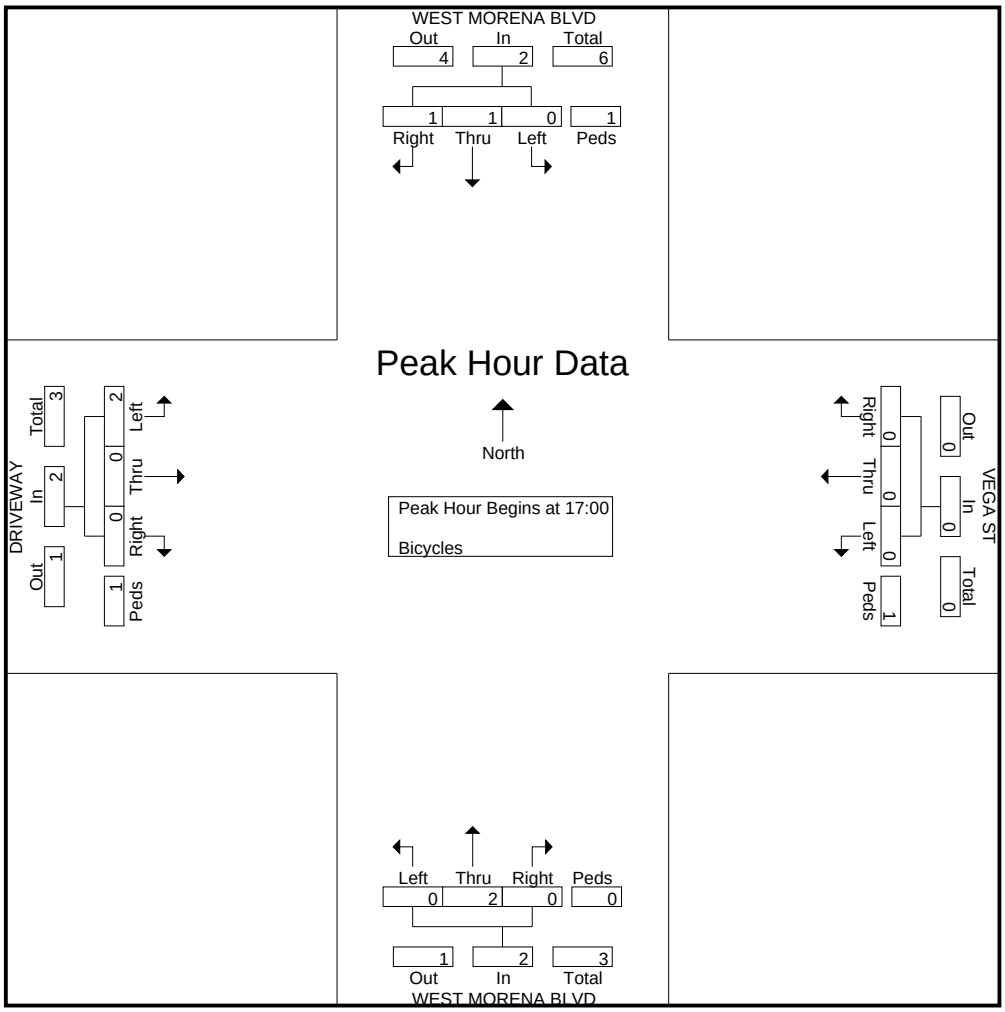

True Count

6520 Lemarand Ave
San Diego, CA 92115

File Name : 17.WEST MORENA BLVD.BUENOS AVE.PED-BIKE
Site Code : 00000000
Start Date : 2/5/2013
Page No : 1

Groups Printed- Bicycles

	WEST MORENA BLVD Southbound				BUENOS AVE Westbound				WEST MORENA BLVD Northbound				BUENOS AVE Eastbound				
Start Time	Left	Thru	Right	Peds	Left	Thru	Right	Peds	Left	Thru	Right	Peds	Left	Thru	Right	Peds	Int. Total
07:00	0	1	0	0	0	0	0	0	0	0	0	0	0	0	0	0	1
07:15	0	1	0	0	0	0	0	0	0	0	0	0	0	0	0	1	2
07:30	0	2	0	0	0	0	0	0	0	1	0	1	0	0	0	0	4
07:45	0	1	0	0	0	0	0	1	0	0	0	1	0	0	0	0	3
Total	0	5	0	0	0	0	0	1	0	1	0	2	0	0	0	1	10
08:00	0	4	0	0	0	0	0	0	0	0	0	0	0	0	0	0	4
08:15	0	0	0	0	0	0	0	1	0	0	0	1	0	0	0	0	2
08:30	0	2	1	0	0	0	0	0	0	0	0	1	0	0	0	0	4
08:45	0	1	0	0	0	0	0	0	0	1	0	1	0	0	0	1	4
Total	0	7	1	0	0	0	0	1	0	1	0	3	0	0	0	1	14
*** BREAK ***																	
16:00	0	1	0	0	0	0	0	0	0	0	0	1	0	0	0	3	5
*** BREAK ***																	
16:30	0	2	0	0	0	0	0	0	0	0	0	0	0	0	0	1	3
*** BREAK ***																	
Total	0	3	0	0	0	0	0	0	0	0	0	1	0	0	0	4	8
17:00	0	1	0	0	0	0	0	1	0	1	1	1	0	0	0	0	5
17:15	0	2	0	0	0	0	0	0	0	1	0	0	0	0	0	0	3
17:30	0	0	0	1	0	0	0	0	0	0	0	2	0	0	0	0	3
17:45	0	1	0	0	0	0	0	0	0	2	0	2	0	0	0	1	6
Total	0	4	0	1	0	0	0	1	0	4	1	5	0	0	0	1	17
Grand Total	0	19	1	1	0	0	0	3	0	6	1	11	0	0	0	7	49
Apprch %	0	90.5	4.8	4.8	0	0	0	100	0	33.3	5.6	61.1	0	0	0	100	
Total %	0	38.8	2	2	0	0	0	6.1	0	12.2	2	22.4	0	0	0	14.3	

True Count

6520 Lemarand Ave
San Diego, CA 92115

File Name : 17.WEST MORENA BLVD.BUENOS AVE.PED-BIKE
Site Code : 00000000
Start Date : 2/5/2013
Page No : 2

	WEST MORENA BLVD Southbound					BUENOS AVE Westbound					WEST MORENA BLVD Northbound					BUENOS AVE Eastbound					
Start Time	**Left**	**Thru**	**Right**	**Peds**	**App. Total**	**Left**	**Thru**	**Right**	**Peds**	**App. Total**	**Left**	**Thru**	**Right**	**Peds**	**App. Total**	**Left**	**Thru**	**Right**	**Peds**	**App. Total**	**Int. Total**
Peak Hour Analysis From 07:00 to 11:45 - Peak 1 of 1																					
Peak Hour for Entire Intersection Begins at 08:00																					
08:00	0	4	0	0	4	0	0	0	0	0	0	0	0	0	0	0	0	0	0	0	4
08:15	0	0	0	0	0	0	0	0	1	1	0	0	0	1	1	0	0	0	0	0	2
08:30	0	2	1	0	3	0	0	0	0	0	0	0	0	1	1	0	0	0	0	0	4
08:45	0	1	0	0	1	0	0	0	0	0	0	1	0	1	2	0	0	0	1	1	4
Total Volume	0	7	1	0	8	0	0	0	1	1	0	1	0	3	4	0	0	0	1	1	14
% App. Total	0	87.5	12.5	0		0	0	0	100		0	25	0	75		0	0	0	100		
PHF	.000	.438	.250	.000	.500	.000	.000	.000	.250	.250	.000	.250	.000	.750	.500	.000	.000	.000	.250	.250	.875

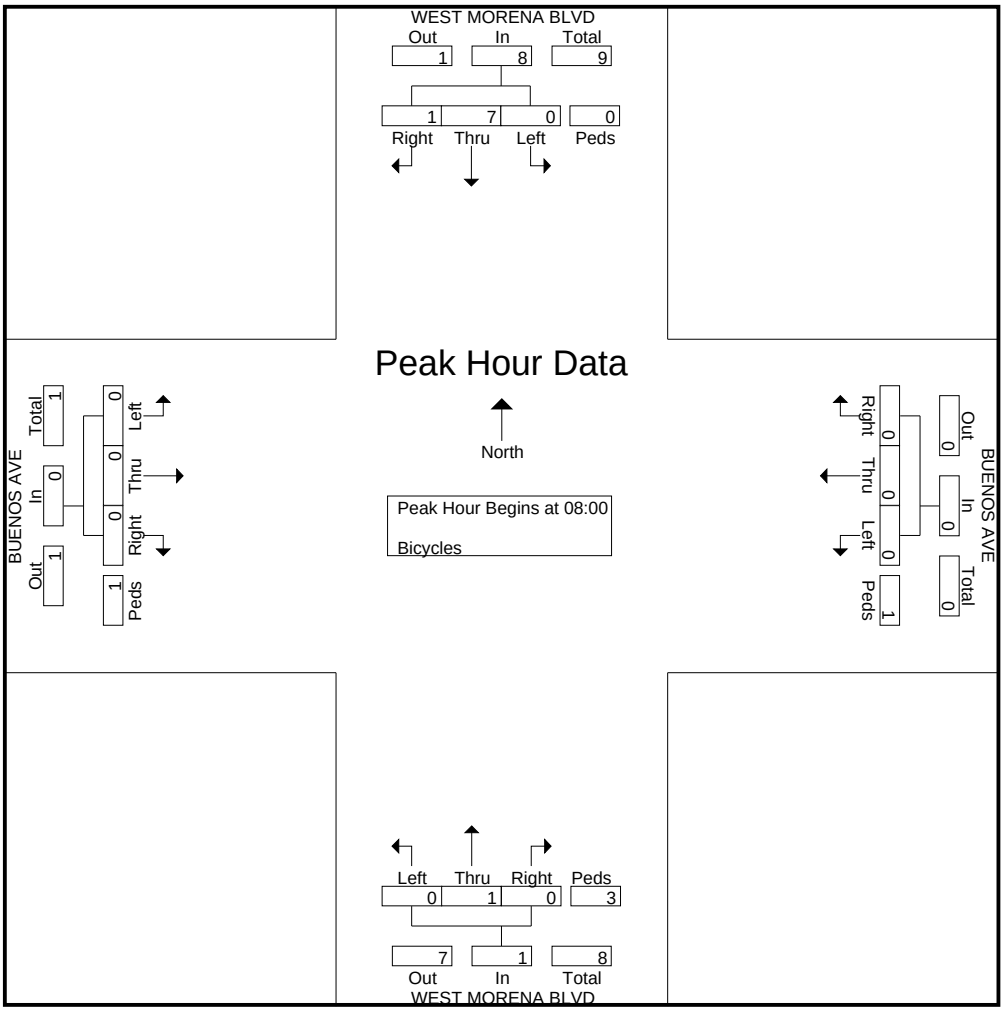

True Count

6520 Lemarand Ave
San Diego, CA 92115

File Name : 17.WEST MORENA BLVD.BUENOS AVE.PED-BIKE
Site Code : 00000000
Start Date : 2/5/2013
Page No : 3

	WEST MORENA BLVD Southbound					BUENOS AVE Westbound					WEST MORENA BLVD Northbound					BUENOS AVE Eastbound					
Start Time	**Left**	**Thru**	**Right**	**Peds**	**App. Total**	**Left**	**Thru**	**Right**	**Peds**	**App. Total**	**Left**	**Thru**	**Right**	**Peds**	**App. Total**	**Left**	**Thru**	**Right**	**Peds**	**App. Total**	**Int. Total**
Peak Hour Analysis From 12:00 to 17:45 - Peak 1 of 1																					
Peak Hour for Entire Intersection Begins at 17:00																					
17:00	0	1	0	0	1	0	0	0	1	1	0	1	1	1	3	0	0	0	0	0	5
17:15	0	2	0	0	2	0	0	0	0	0	0	1	0	0	1	0	0	0	0	0	3
17:30	0	0	0	1	1	0	0	0	0	0	0	0	0	2	2	0	0	0	0	0	3
17:45	0	1	0	0	1	0	0	0	0	0	0	2	0	2	4	0	0	0	1	1	6
Total Volume	0	4	0	1	5	0	0	0	1	1	0	4	1	5	10	0	0	0	1	1	17
% App. Total	0	80	0	20		0	0	0	100		0	40	10	50		0	0	0	100		
PHF	.000	.500	.000	.250	.625	.000	.000	.000	.250	.250	.000	.500	.250	.625	.625	.000	.000	.000	.250	.250	.708

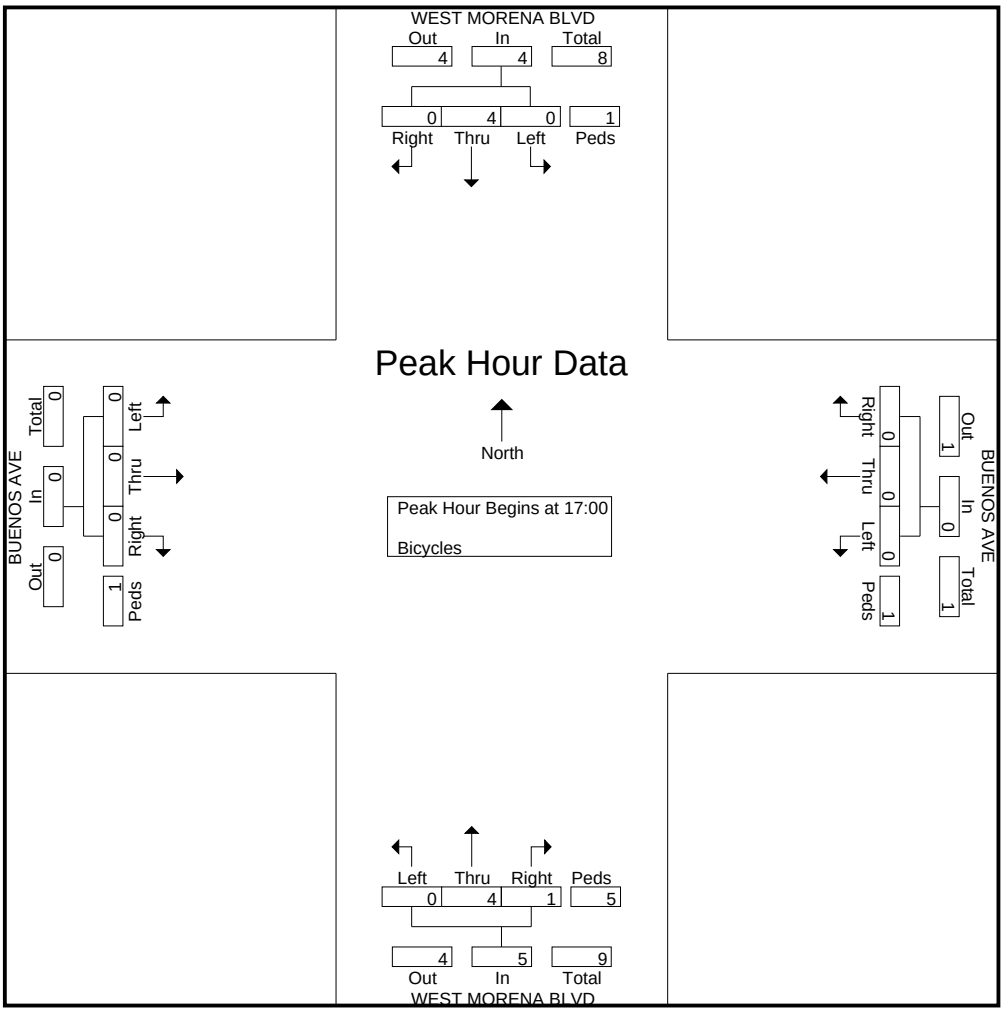

True Count

6520 Lemarand Ave
San Diego, CA 92115

File Name : 18.MORENA BLVD.SHERMAN ST.PED-BIKE
Site Code : 00000000
Start Date : 2/5/2013
Page No : 1

Groups Printed- Bicycles

	MORENA BLVD Southbound				NAPA ST Westbound				MORENA BLVD Northbound				SHERMAN ST Eastbound				
Start Time	Left	Thru	Right	Peds	Left	Thru	Right	Peds	Left	Thru	Right	Peds	Left	Thru	Right	Peds	Int. Total
07:00	0	1	0	0	0	1	1	1	0	0	0	7	0	0	0	2	13
07:15	1	0	0	0	0	0	1	0	0	1	0	3	0	0	0	1	7
07:30	0	3	0	0	0	0	0	0	0	2	0	2	0	0	0	0	7
07:45	2	2	0	0	0	0	0	4	0	1	0	1	0	0	0	1	11
Total	3	6	0	0	0	1	2	5	0	4	0	13	0	0	0	4	38
08:00	2	3	0	0	0	0	2	4	0	0	0	2	0	0	0	0	13
08:15	1	0	0	0	0	0	1	2	0	1	2	4	0	0	0	3	14
08:30	2	2	0	0	0	0	0	1	0	0	0	7	0	0	0	1	13
08:45	1	0	0	0	0	0	0	1	0	3	0	2	0	0	0	3	10
Total	6	5	0	0	0	0	3	8	0	4	2	15	0	0	0	7	50
*** BREAK ***																	
16:00	0	1	0	0	0	1	1	1	0	0	0	2	0	1	1	2	10
16:15	2	2	1	0	0	0	0	4	0	1	0	4	0	0	1	0	15
16:30	2	2	0	0	0	0	1	3	0	2	0	8	0	0	0	1	19
16:45	1	0	0	0	0	0	1	7	0	2	0	2	0	0	0	2	15
Total	5	5	1	0	0	1	3	15	0	5	0	16	0	1	2	5	59
17:00	1	1	0	0	0	0	1	2	0	2	0	0	0	1	0	1	9
17:15	3	2	0	0	0	0	3	3	0	1	0	3	0	0	0	1	16
17:30	0	0	0	0	0	0	1	0	0	0	0	2	0	0	0	1	4
17:45	0	1	0	0	0	0	0	3	0	1	0	3	0	0	0	2	10
Total	4	4	0	0	0	0	5	8	0	4	0	8	0	1	0	5	39
Grand Total	18	20	1	0	0	2	13	36	0	17	2	52	0	2	2	21	186
Apprch %	46.2	51.3	2.6	0	0	3.9	25.5	70.6	0	23.9	2.8	73.2	0	8	8	84	
Total %	9.7	10.8	0.5	0	0	1.1	7	19.4	0	9.1	1.1	28	0	1.1	1.1	11.3	

True Count

6520 Lemarand Ave
San Diego, CA 92115

File Name : 18.MORENA BLVD.SHERMAN ST.PED-BIKE
Site Code : 00000000
Start Date : 2/5/2013
Page No : 2

	MORENA BLVD Southbound					NAPA ST Westbound					MORENA BLVD Northbound					SHERMAN ST Eastbound					
Start Time	**Left**	**Thru**	**Right**	**Peds**	**App. Total**	**Left**	**Thru**	**Right**	**Peds**	**App. Total**	**Left**	**Thru**	**Right**	**Peds**	**App. Total**	**Left**	**Thru**	**Right**	**Peds**	**App. Total**	**Int. Total**
Peak Hour Analysis From 07:00 to 11:45 - Peak 1 of 1																					
Peak Hour for Entire Intersection Begins at 07:45																					
07:45	2	2	0	0	4	0	0	0	4	4	0	1	0	1	2	0	0	0	1	1	11
08:00	2	3	0	0	5	0	0	2	4	6	0	0	0	2	2	0	0	0	0	0	13
08:15	1	0	0	0	1	0	0	1	2	3	0	1	2	4	7	0	0	0	3	3	14
08:30	2	2	0	0	4	0	0	0	1	1	0	0	0	7	7	0	0	0	1	1	13
Total Volume	7	7	0	0	14	0	0	3	11	14	0	2	2	14	18	0	0	0	5	5	51
% App. Total	50	50	0	0		0	0	21.4	78.6		0	11.1	11.1	77.8		0	0	0	100		
PHF	.875	.583	.000	.000	.700	.000	.000	.375	.688	.583	.000	.500	.250	.500	.643	.000	.000	.000	.417	.417	.911

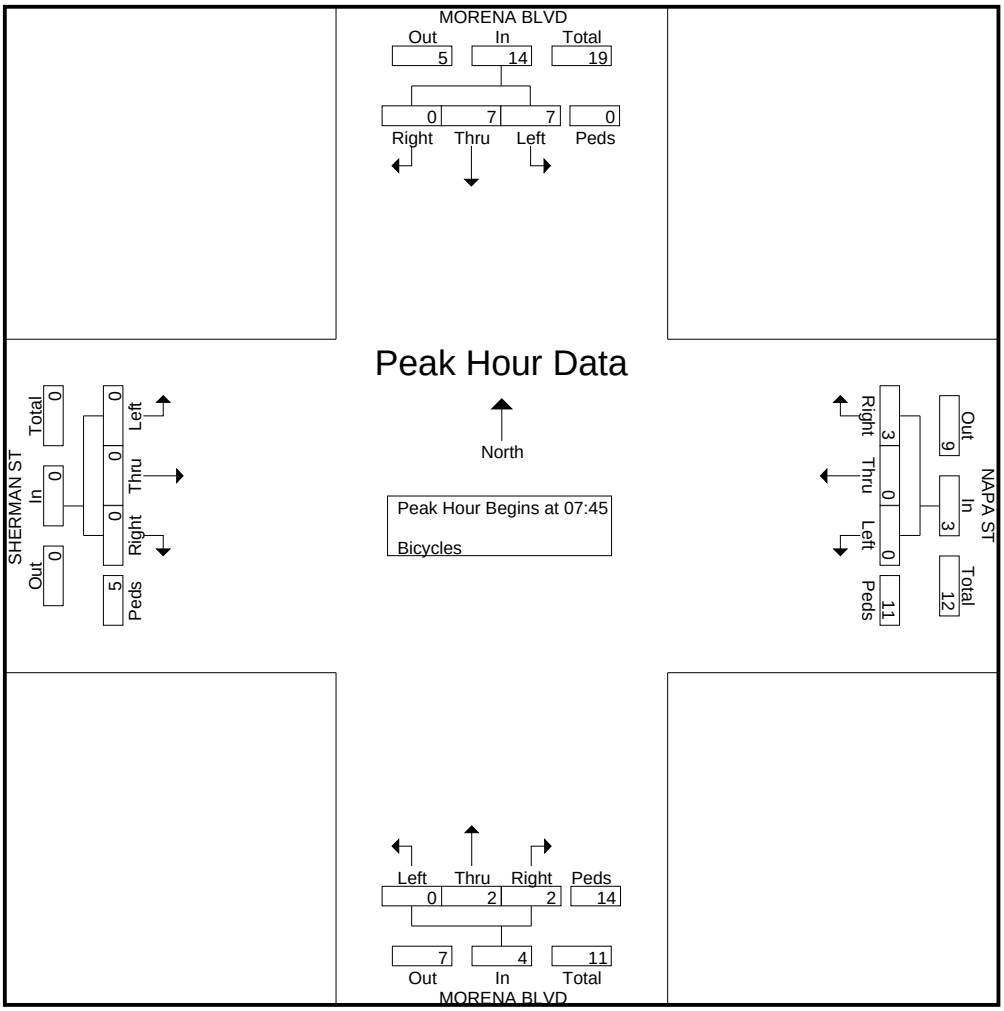

True Count

6520 Lemarand Ave
San Diego, CA 92115

File Name : 18.MORENA BLVD.SHERMAN ST.PED-BIKE
Site Code : 00000000
Start Date : 2/5/2013
Page No : 3

	MORENA BLVD Southbound					NAPA ST Westbound					MORENA BLVD Northbound					SHERMAN ST Eastbound					
Start Time	**Left**	**Thru**	**Right**	**Peds**	**App. Total**	**Left**	**Thru**	**Right**	**Peds**	**App. Total**	**Left**	**Thru**	**Right**	**Peds**	**App. Total**	**Left**	**Thru**	**Right**	**Peds**	**App. Total**	**Int. Total**
Peak Hour Analysis From 12:00 to 17:45 - Peak 1 of 1																					
Peak Hour for Entire Intersection Begins at 16:00																					
16:00	0	1	0	0	1	0	1	1	1	3	0	0	0	2	2	0	1	1	2	4	10
16:15	2	2	1	0	5	0	0	0	4	4	0	1	0	4	5	0	0	1	0	1	15
16:30	2	2	0	0	4	0	0	1	3	4	0	2	0	8	10	0	0	0	1	1	19
16:45	1	0	0	0	1	0	0	1	7	8	0	2	0	2	4	0	0	0	2	2	15
Total Volume	5	5	1	0	11	0	1	3	15	19	0	5	0	16	21	0	1	2	5	8	59
% App. Total	45.5	45.5	9.1	0		0	5.3	15.8	78.9		0	23.8	0	76.2		0	12.5	25	62.5		
PHF	.625	.625	.250	.000	.550	.000	.250	.750	.536	.594	.000	.625	.000	.500	.525	.000	.250	.500	.625	.500	.776

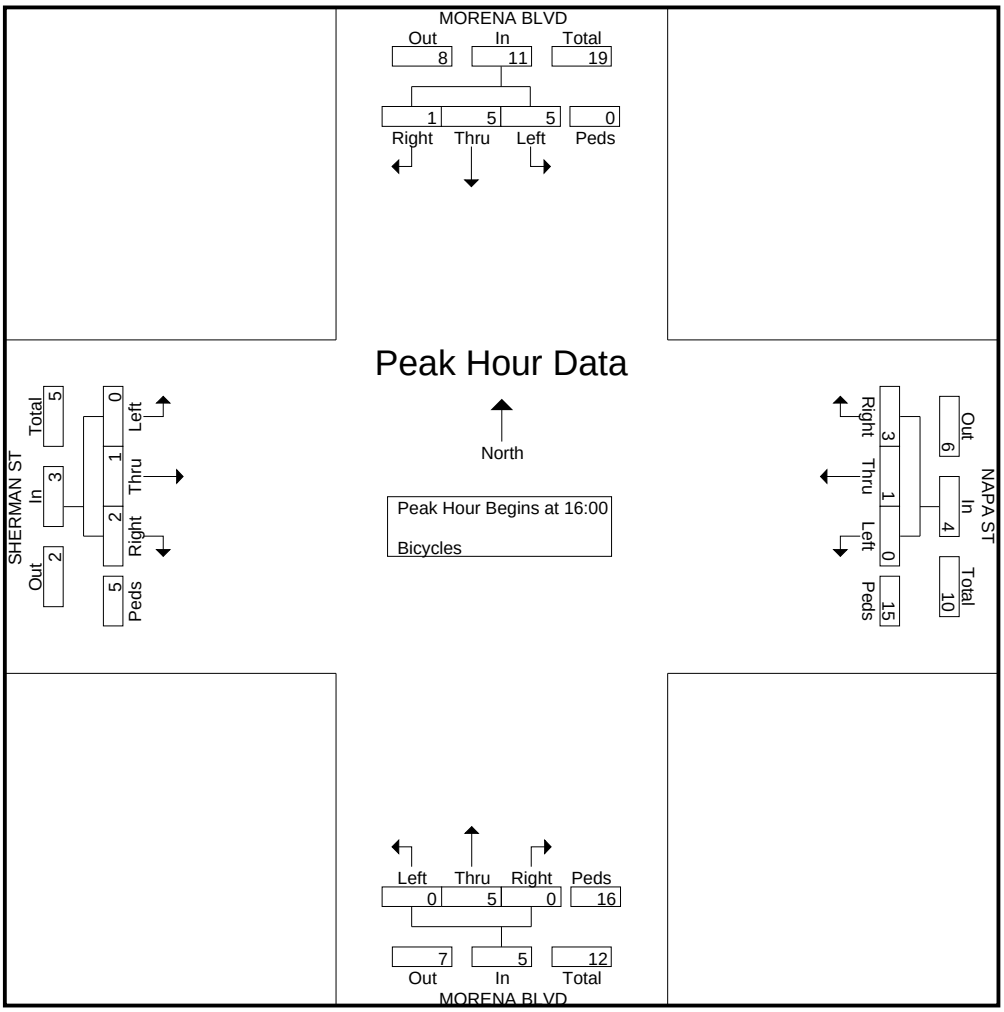

True Count

6520 Lemarand Ave
San Diego, CA 92115

File Name : 19.MORENA BLVD.LINDA VISTA RD.PED-BIKE
Site Code : 00000000
Start Date : 2/12/2013
Page No : 1

Groups Printed- Bicycles

	MORENA BLVD Southbound				LINDA VISTA RD Westbound				MORENA BLVD Northbound				Eastbound				
Start Time	Left	Thru	Right	Peds	Left	Thru	Right	Peds	Left	Thru	Right	Peds	Left	Thru	Right	Peds	Int. Total
07:00	0	1	0	0	0	0	0	0	0	2	0	1	0	0	0	0	4
07:15	0	1	0	1	4	0	0	0	0	1	1	1	0	0	0	0	9
07:30	0	2	0	0	0	0	0	0	0	1	3	0	0	0	0	0	6
07:45	0	2	0	0	2	0	1	0	0	0	2	0	0	0	0	0	7
Total	0	6	0	1	6	0	1	0	0	4	6	2	0	0	0	0	26
08:00	0	3	0	0	2	0	0	0	0	0	0	0	0	0	0	0	5
08:15	0	1	0	0	0	0	1	0	0	0	1	0	0	0	0	0	3
08:30	0	2	0	2	1	0	0	1	0	0	0	0	0	0	0	0	6
08:45	0	0	0	0	1	0	0	0	0	3	2	0	0	0	0	0	6
Total	0	6	0	2	4	0	1	1	0	3	3	0	0	0	0	0	20
*** BREAK ***																	
16:00	0	0	0	0	1	0	0	0	0	1	2	0	0	0	0	0	4
16:15	1	3	0	0	2	0	0	0	0	1	2	0	0	0	0	0	9
16:30	0	2	0	1	1	0	0	1	0	1	0	0	0	0	0	0	6
16:45	0	0	0	0	2	0	1	0	0	2	3	0	0	0	0	0	8
Total	1	5	0	1	6	0	1	1	0	5	7	0	0	0	0	0	27
17:00	0	0	0	0	0	0	0	1	0	2	3	0	0	0	0	0	6
17:15	0	2	0	0	1	0	0	0	0	1	4	0	0	0	0	0	8
17:30	0	0	0	0	0	0	0	0	0	0	2	0	0	0	0	0	2
17:45	0	1	0	0	1	0	0	0	0	1	1	0	0	0	0	0	4
Total	0	3	0	0	2	0	0	1	0	4	10	0	0	0	0	0	20
Grand Total	1	20	0	4	18	0	3	3	0	16	26	2	0	0	0	0	93
Apprch %	4	80	0	16	75	0	12.5	12.5	0	36.4	59.1	4.5	0	0	0	0	
Total %	1.1	21.5	0	4.3	19.4	0	3.2	3.2	0	17.2	28	2.2	0	0	0	0	

True Count

6520 Lemarand Ave
San Diego, CA 92115

File Name : 19.MORENA BLVD.LINDA VISTA RD.PED-BIKE
Site Code : 00000000
Start Date : 2/12/2013
Page No : 2

	MORENA BLVD Southbound					LINDA VISTA RD Westbound					MORENA BLVD Northbound					Eastbound					
Start Time	**Left**	**Thru**	**Right**	**Peds**	**App. Total**	**Left**	**Thru**	**Right**	**Peds**	**App. Total**	**Left**	**Thru**	**Right**	**Peds**	**App. Total**	**Left**	**Thru**	**Right**	**Peds**	**App. Total**	**Int. Total**
Peak Hour Analysis From 07:00 to 11:45 - Peak 1 of 1																					
Peak Hour for Entire Intersection Begins at 07:15																					
07:15	0	1	0	1	2	4	0	0	0	4	0	1	1	1	3	0	0	0	0	0	9
07:30	0	2	0	0	2	0	0	0	0	0	0	1	3	0	4	0	0	0	0	0	6
07:45	0	2	0	0	2	2	0	1	0	3	0	0	2	0	2	0	0	0	0	0	7
08:00	0	3	0	0	3	2	0	0	0	2	0	0	0	0	0	0	0	0	0	0	5
Total Volume	0	8	0	1	9	8	0	1	0	9	0	2	6	1	9	0	0	0	0	0	27
% App. Total	0	88.9	0	11.1		88.9	0	11.1	0		0	22.2	66.7	11.1		0	0	0	0		
PHF	.000	.667	.000	.250	.750	.500	.000	.250	.000	.563	.000	.500	.500	.250	.563	.000	.000	.000	.000	.000	.750

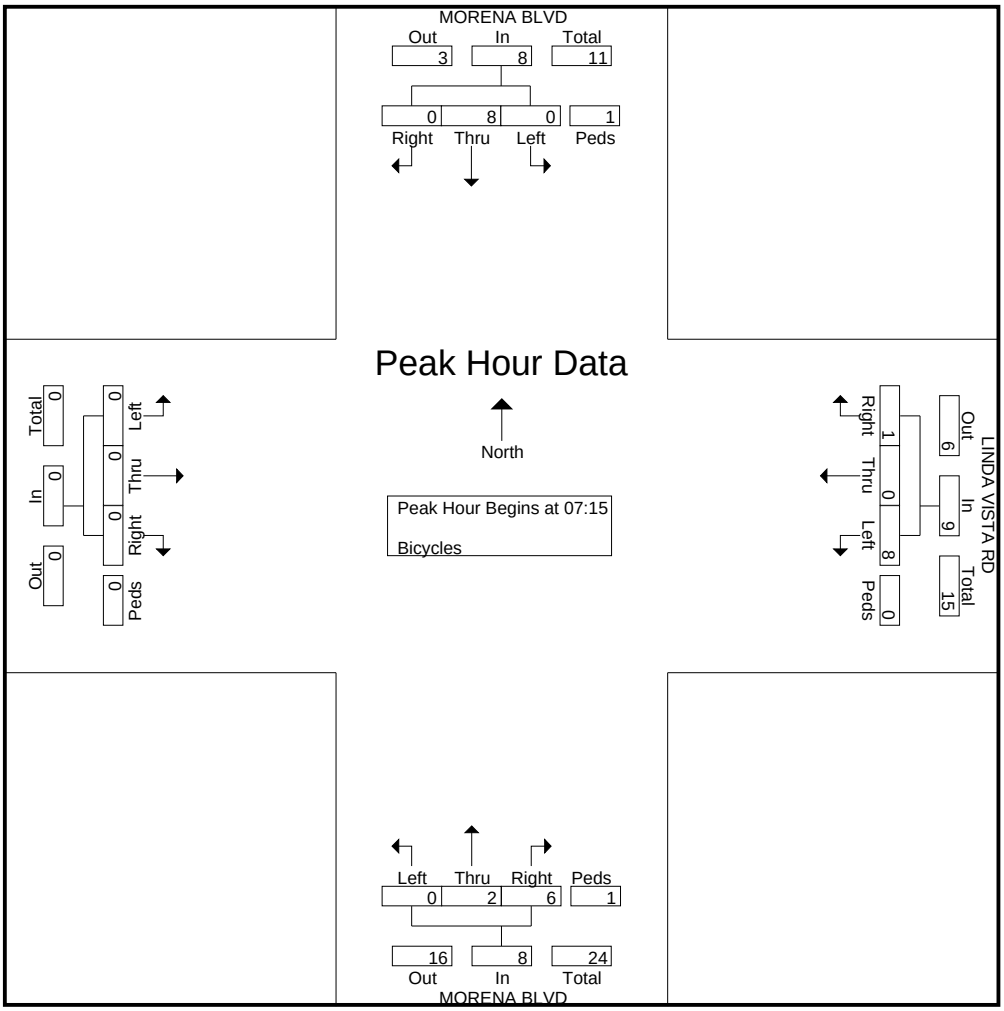

True Count

6520 Lemarand Ave
San Diego, CA 92115

File Name : 19.MORENA BLVD.LINDA VISTA RD.PED-BIKE
Site Code : 00000000
Start Date : 2/12/2013
Page No : 3

	MORENA BLVD Southbound					LINDA VISTA RD Westbound					MORENA BLVD Northbound					Eastbound					
Start Time	**Left**	**Thru**	**Right**	**Peds**	**App. Total**	**Left**	**Thru**	**Right**	**Peds**	**App. Total**	**Left**	**Thru**	**Right**	**Peds**	**App. Total**	**Left**	**Thru**	**Right**	**Peds**	**App. Total**	**Int. Total**
Peak Hour Analysis From 12:00 to 17:45 - Peak 1 of 1																					
Peak Hour for Entire Intersection Begins at 16:15																					
16:15	1	3	0	0	4	2	0	0	0	2	0	1	2	0	3	0	0	0	0	0	9
16:30	0	2	0	1	3	1	0	0	1	2	0	1	0	0	1	0	0	0	0	0	6
16:45	0	0	0	0	0	2	0	1	0	3	0	2	3	0	5	0	0	0	0	0	8
17:00	0	0	0	0	0	0	0	0	1	1	0	2	3	0	5	0	0	0	0	0	6
Total Volume	1	5	0	1	7	5	0	1	2	8	0	6	8	0	14	0	0	0	0	0	29
% App. Total	14.3	71.4	0	14.3		62.5	0	12.5	25		0	42.9	57.1	0		0	0	0	0		
PHF	.250	.417	.000	.250	.438	.625	.000	.250	.500	.667	.000	.750	.667	.000	.700	.000	.000	.000	.000	.000	.806

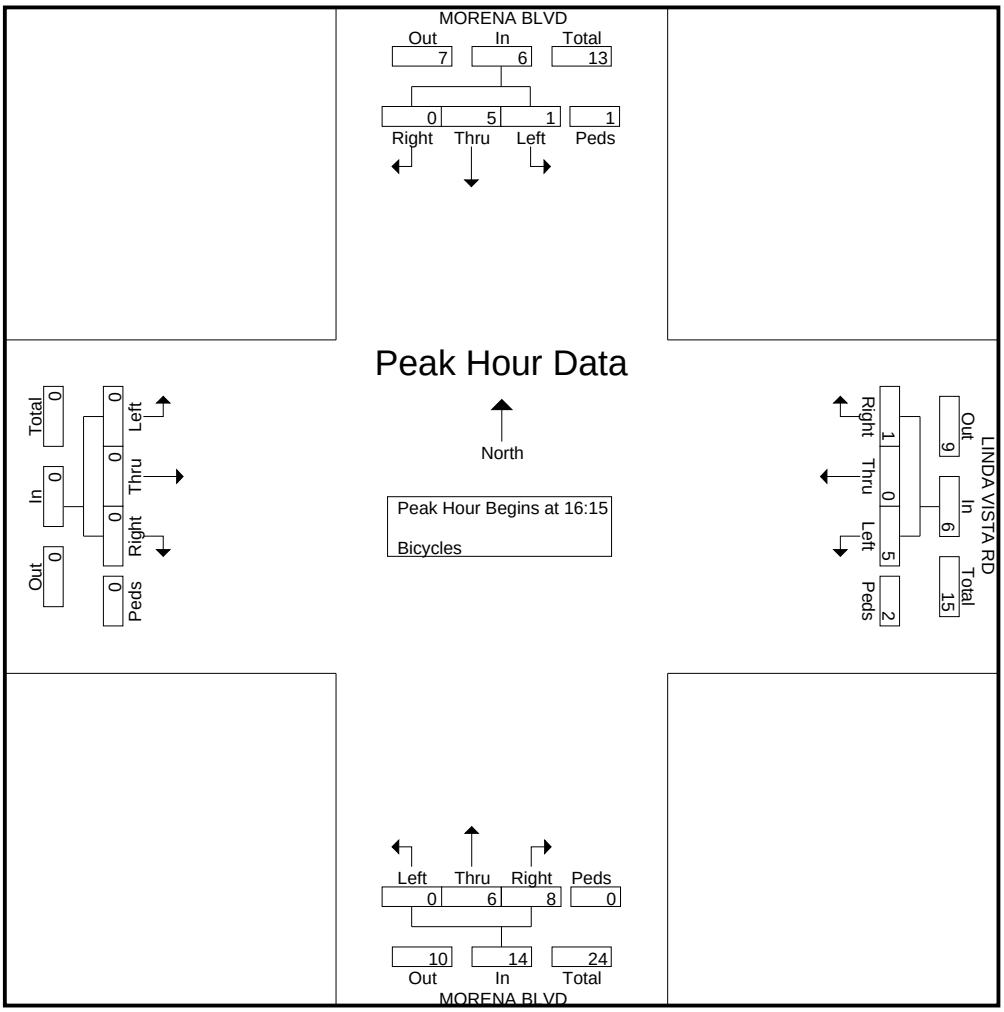

True Count

6520 Lemarand Ave
San Diego, CA 92115

File Name : 20.NAPA ST.LINDA VISTA RD.PED-BIKE
Site Code : 00000000
Start Date : 2/5/2013
Page No : 1

Groups Printed- Bicycles

	NAPA ST Southbound				LINDA VISTA RD Westbound				NAPA ST Northbound				LINDA VISTA RD Eastbound				
Start Time	Left	Thru	Right	Peds	Left	Thru	Right	Peds	Left	Thru	Right	Peds	Left	Thru	Right	Peds	Int. Total
07:00	0	0	1	1	0	0	0	2	0	3	0	4	0	0	0	29	40
07:15	0	1	0	1	1	2	0	1	0	1	0	4	0	2	1	10	24
07:30	0	0	0	3	0	1	0	1	1	0	1	5	0	2	0	10	24
07:45	2	1	0	5	0	1	0	4	1	0	0	6	0	2	1	11	34
Total	2	2	1	10	1	4	0	8	2	4	1	19	0	6	2	60	122
08:00	1	3	0	1	0	1	1	2	0	1	0	8	0	1	0	6	25
08:15	0	2	3	1	0	0	0	1	0	2	1	2	0	1	0	12	25
08:30	0	0	0	8	0	0	0	7	0	0	0	7	0	0	0	13	35
08:45	0	1	0	9	0	2	0	6	0	0	0	9	0	1	0	11	39
Total	1	6	3	19	0	3	1	16	0	3	1	26	0	3	0	42	124
*** BREAK ***																	
16:00	0	1	0	5	0	1	0	4	0	0	0	15	1	0	0	10	37
16:15	0	1	0	2	0	1	0	0	1	0	0	7	0	2	0	13	27
16:30	1	2	0	5	1	0	1	1	0	0	0	8	0	0	0	23	42
16:45	0	0	0	4	0	2	0	9	0	2	0	9	0	0	0	12	38
Total	1	4	0	16	1	4	1	14	1	2	0	39	1	2	0	58	144
17:00	0	0	0	1	1	0	0	6	1	0	1	5	0	3	2	7	27
17:15	0	2	0	4	0	1	0	8	2	0	0	8	1	2	1	19	48
17:30	1	1	0	4	0	0	0	3	0	1	0	4	0	1	0	12	27
17:45	0	1	0	4	0	1	1	2	0	1	0	2	0	1	0	7	20
Total	1	4	0	13	1	2	1	19	3	2	1	19	1	7	3	45	122
Grand Total	5	16	4	58	3	13	3	57	6	11	3	103	2	18	5	205	512
Apprch %	6	19.3	4.8	69.9	3.9	17.1	3.9	75	4.9	8.9	2.4	83.7	0.9	7.8	2.2	89.1	
Total %	1	3.1	0.8	11.3	0.6	2.5	0.6	11.1	1.2	2.1	0.6	20.1	0.4	3.5	1	40	

True Count

6520 Lemarand Ave
San Diego, CA 92115

File Name : 20.NAPA ST.LINDA VISTA RD.PED-BIKE
Site Code : 00000000
Start Date : 2/5/2013
Page No : 2

	NAPA ST Southbound					LINDA VISTA RD Westbound					NAPA ST Northbound					LINDA VISTA RD Eastbound					
Start Time	**Left**	**Thru**	**Right**	**Peds**	**App. Total**	**Left**	**Thru**	**Right**	**Peds**	**App. Total**	**Left**	**Thru**	**Right**	**Peds**	**App. Total**	**Left**	**Thru**	**Right**	**Peds**	**App. Total**	**Int. Total**
Peak Hour Analysis From 07:00 to 11:45 - Peak 1 of 1																					
Peak Hour for Entire Intersection Begins at 08:00																					
08:00	1	3	0	1	5	0	1	1	2	4	0	1	0	8	9	0	1	0	6	7	25
08:15	0	2	3	1	6	0	0	0	1	1	0	2	1	2	5	0	1	0	12	13	25
08:30	0	0	0	8	8	0	0	0	7	7	0	0	0	7	7	0	0	0	13	13	35
08:45	0	1	0	9	10	0	2	0	6	8	0	0	0	9	9	0	1	0	11	12	39
Total Volume	1	6	3	19	29	0	3	1	16	20	0	3	1	26	30	0	3	0	42	45	124
% App. Total	3.4	20.7	10.3	65.5		0	15	5	80		0	10	3.3	86.7		0	6.7	0	93.3		
PHF	.250	.500	.250	.528	.725	.000	.375	.250	.571	.625	.000	.375	.250	.722	.833	.000	.750	.000	.808	.865	.795

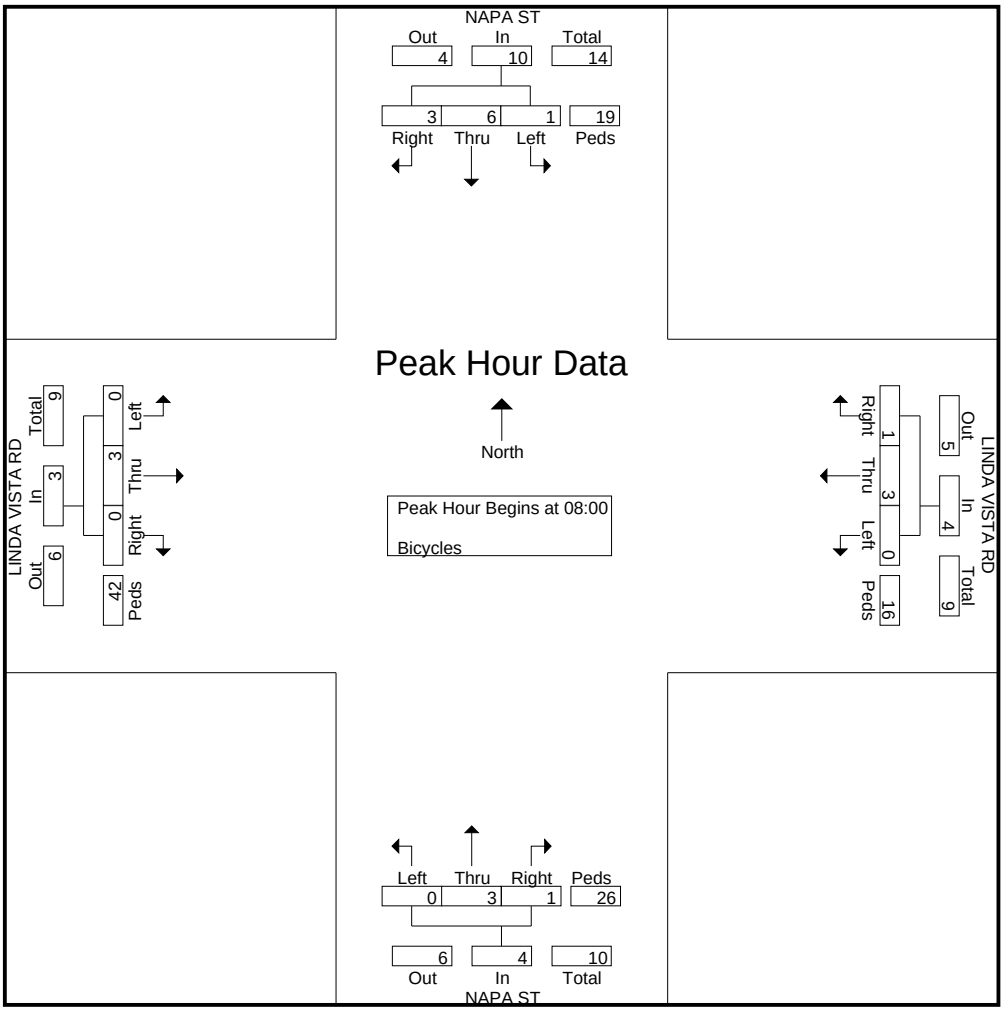

True Count

6520 Lemarand Ave
San Diego, CA 92115

File Name : 20.NAPA ST.LINDA VISTA RD.PED-BIKE
Site Code : 00000000
Start Date : 2/5/2013
Page No : 3

	NAPA ST Southbound					LINDA VISTA RD Westbound					NAPA ST Northbound					LINDA VISTA RD Eastbound					
Start Time	**Left**	**Thru**	**Right**	**Peds**	**App. Total**	**Left**	**Thru**	**Right**	**Peds**	**App. Total**	**Left**	**Thru**	**Right**	**Peds**	**App. Total**	**Left**	**Thru**	**Right**	**Peds**	**App. Total**	**Int. Total**
Peak Hour Analysis From 12:00 to 17:45 - Peak 1 of 1																					
Peak Hour for Entire Intersection Begins at 16:30																					
16:30	1	2	0	5	8	1	0	1	1	3	0	0	0	8	8	0	0	0	23	23	42
16:45	0	0	0	4	4	0	2	0	9	11	0	2	0	9	11	0	0	0	12	12	38
17:00	0	0	0	1	1	1	0	0	6	7	1	0	1	5	7	0	3	2	7	12	27
17:15	0	2	0	4	6	0	1	0	8	9	2	0	0	8	10	1	2	1	19	23	48
Total Volume	1	4	0	14	19	2	3	1	24	30	3	2	1	30	36	1	5	3	61	70	155
% App. Total	5.3	21.1	0	73.7		6.7	10	3.3	80		8.3	5.6	2.8	83.3		1.4	7.1	4.3	87.1		
PHF	.250	.500	.000	.700	.594	.500	.375	.250	.667	.682	.375	.250	.250	.833	.818	.250	.417	.375	.663	.761	.807

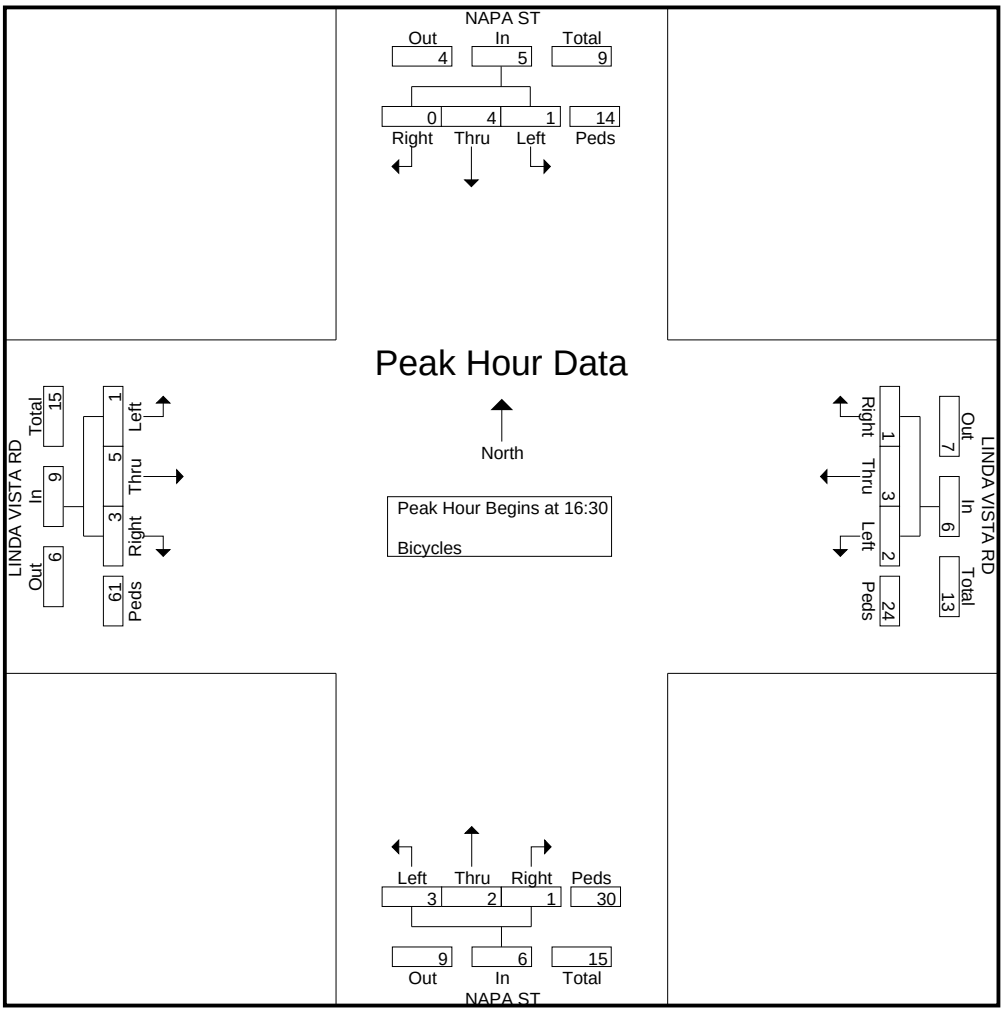

True Count

6520 Lemarand Ave
San Diego, CA 92115

File Name : 21.MARIAN WAY.LINDA VISTA RD.PED-BIKE
Site Code : 00000000
Start Date : 2/5/2013
Page No : 1

Groups Printed- Bicycles

	MARIAN WY Southbound				LINDA VISTA RD Westbound				MARIAN WY Northbound				LINDA VISTA RD Eastbound				
Start Time	Left	Thru	Right	Peds	Left	Thru	Right	Peds	Left	Thru	Right	Peds	Left	Thru	Right	Peds	Int. Total
07:00	0	0	0	1	0	0	0	0	0	0	0	0	0	0	0	1	2
07:15	0	0	0	2	0	4	0	1	0	0	1	1	0	1	0	4	14
07:30	0	0	0	1	0	0	0	1	0	1	0	0	0	2	1	0	6
07:45	0	0	0	1	0	1	0	1	0	0	0	0	0	4	0	4	11
Total	0	0	0	5	0	5	0	3	0	1	1	1	0	7	1	9	33
08:00	0	0	0	0	0	1	0	0	1	1	0	1	0	2	0	0	6
08:15	0	0	0	1	0	2	0	1	0	0	0	2	0	2	0	1	9
08:30	0	0	0	1	0	0	0	0	0	0	0	0	0	2	0	4	7
08:45	0	0	0	1	0	2	0	2	0	0	0	0	1	1	0	8	15
Total	0	0	0	3	0	5	0	3	1	1	0	3	1	7	0	13	37
*** BREAK ***																	
16:00	0	0	0	3	0	0	0	1	0	0	0	0	0	0	0	3	7
16:15	0	0	2	1	0	0	0	0	0	0	0	0	0	1	0	2	6
16:30	0	0	0	0	0	3	0	1	1	1	0	3	0	1	0	3	13
16:45	0	0	0	0	0	1	0	1	0	0	0	0	0	0	0	3	5
Total	0	0	2	4	0	4	0	3	1	1	0	3	0	2	0	11	31
17:00	0	0	0	4	0	1	0	2	0	0	0	2	0	4	0	1	14
17:15	0	0	0	2	0	0	0	2	0	0	0	0	1	2	0	1	8
17:30	0	0	0	1	0	0	0	2	0	0	0	2	0	1	0	7	13
17:45	0	0	0	2	0	0	0	1	0	0	0	1	0	1	0	1	6
Total	0	0	0	9	0	1	0	7	0	0	0	5	1	8	0	10	41
Grand Total	0	0	2	21	0	15	0	16	2	3	1	12	2	24	1	43	142
Apprch %	0	0	8.7	91.3	0	48.4	0	51.6	11.1	16.7	5.6	66.7	2.9	34.3	1.4	61.4	
Total %	0	0	1.4	14.8	0	10.6	0	11.3	1.4	2.1	0.7	8.5	1.4	16.9	0.7	30.3	

True Count

6520 Lemarand Ave
San Diego, CA 92115

File Name : 21.MARIAN WAY.LINDA VISTA RD.PED-BIKE
Site Code : 00000000
Start Date : 2/5/2013
Page No : 2

	MARIAN WY Southbound					LINDA VISTA RD Westbound					MARIAN WY Northbound					LINDA VISTA RD Eastbound					
Start Time	**Left**	**Thru**	**Right**	**Peds**	**App. Total**	**Left**	**Thru**	**Right**	**Peds**	**App. Total**	**Left**	**Thru**	**Right**	**Peds**	**App. Total**	**Left**	**Thru**	**Right**	**Peds**	**App. Total**	**Int. Total**
Peak Hour Analysis From 07:00 to 11:45 - Peak 1 of 1																					
Peak Hour for Entire Intersection Begins at 07:15																					
07:15	0	0	0	2	2	0	4	0	1	5	0	0	1	1	2	0	1	0	4	5	14
07:30	0	0	0	1	1	0	0	0	1	1	0	1	0	0	1	0	2	1	0	3	6
07:45	0	0	0	1	1	0	1	0	1	2	0	0	0	0	0	0	4	0	4	8	11
08:00	0	0	0	0	0	0	1	0	0	1	1	1	0	1	3	0	2	0	0	2	6
Total Volume	0	0	0	4	4	0	6	0	3	9	1	2	1	2	6	0	9	1	8	18	37
% App. Total	0	0	0	100		0	66.7	0	33.3		16.7	33.3	16.7	33.3		0	50	5.6	44.4		
PHF	.000	.000	.000	.500	.500	.000	.375	.000	.750	.450	.250	.500	.250	.500	.500	.000	.563	.250	.500	.563	.661

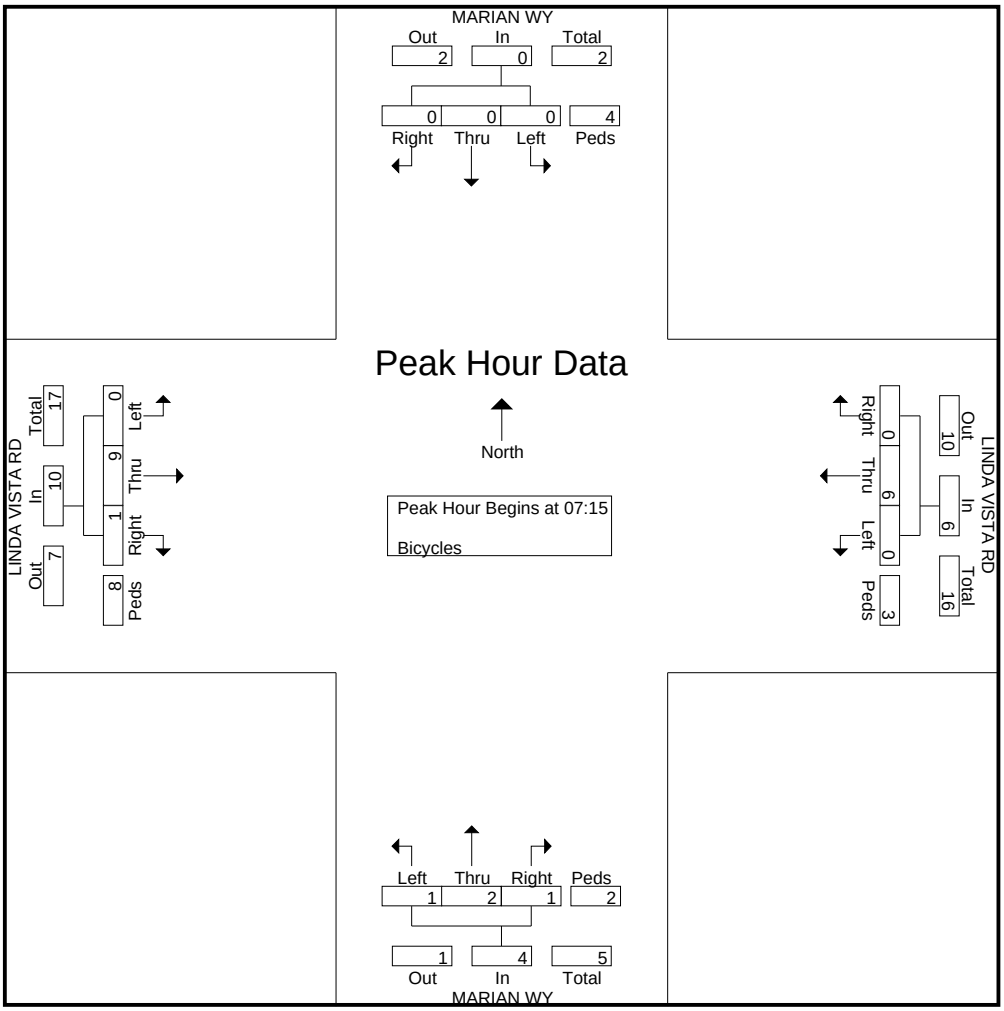

True Count

6520 Lemarand Ave
San Diego, CA 92115

File Name : 21.MARIAN WAY.LINDA VISTA RD.PED-BIKE
Site Code : 00000000
Start Date : 2/5/2013
Page No : 3

	MARIAN WY Southbound					LINDA VISTA RD Westbound					MARIAN WY Northbound					LINDA VISTA RD Eastbound					
Start Time	**Left**	**Thru**	**Right**	**Peds**	**App. Total**	**Left**	**Thru**	**Right**	**Peds**	**App. Total**	**Left**	**Thru**	**Right**	**Peds**	**App. Total**	**Left**	**Thru**	**Right**	**Peds**	**App. Total**	**Int. Total**
Peak Hour Analysis From 12:00 to 17:45 - Peak 1 of 1																					
Peak Hour for Entire Intersection Begins at 17:00																					
17:00	0	0	0	4	4	0	1	0	2	3	0	0	0	2	2	0	4	0	1	5	14
17:15	0	0	0	2	2	0	0	0	2	2	0	0	0	0	0	1	2	0	1	4	8
17:30	0	0	0	1	1	0	0	0	2	2	0	0	0	2	2	0	1	0	7	8	13
17:45	0	0	0	2	2	0	0	0	1	1	0	0	0	1	1	0	1	0	1	2	6
Total Volume	0	0	0	9	9	0	1	0	7	8	0	0	0	5	5	1	8	0	10	19	41
% App. Total	0	0	0	100		0	12.5	0	87.5		0	0	0	100		5.3	42.1	0	52.6		
PHF	.000	.000	.000	.563	.563	.000	.250	.000	.875	.667	.000	.000	.000	.625	.625	.250	.500	.000	.357	.594	.732

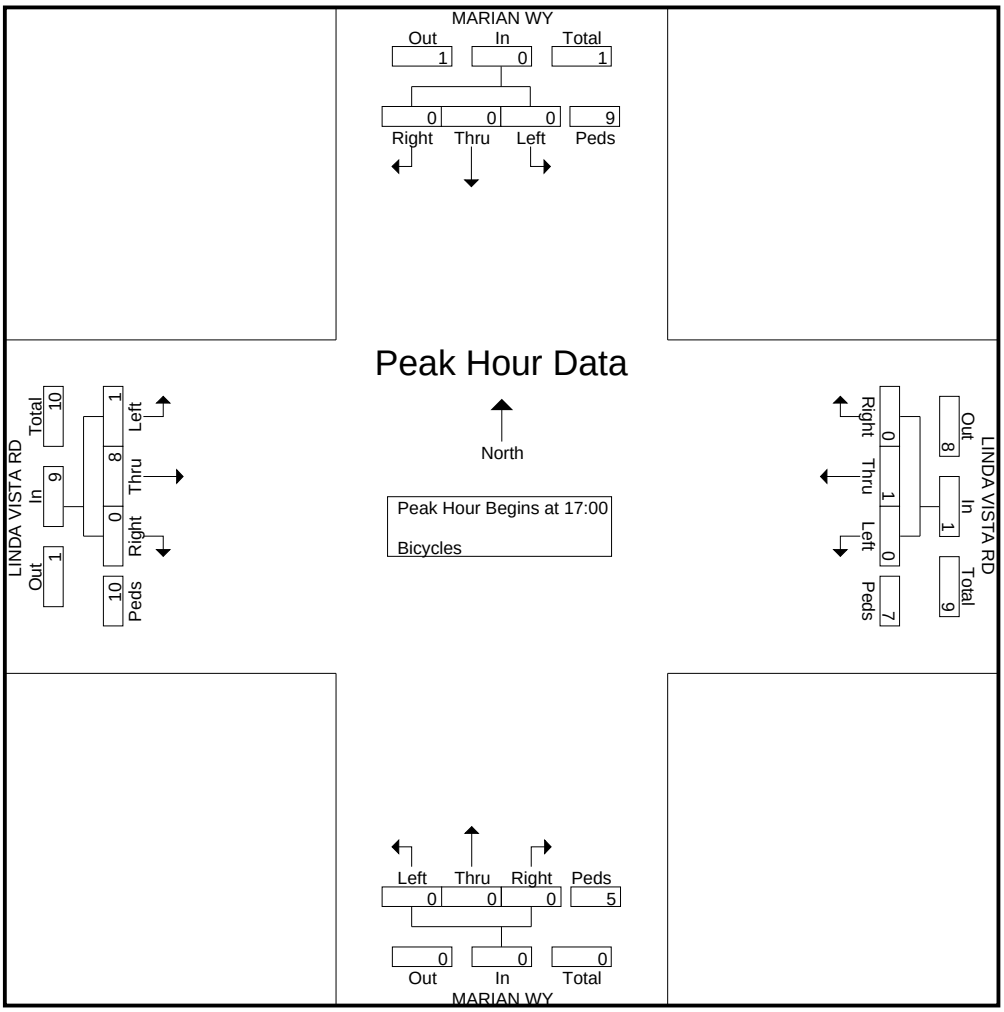

True Count

6520 Lemarand Ave
San Diego, CA 92115

File Name : 22.NAPA ST.RILEY ST.PED-BIKE
Site Code : 00000000
Start Date : 2/5/2013
Page No : 1

Groups Printed- Bicycles

	NAPA ST Southbound				RILEY ST Westbound				NAPA ST Northbound				RILEY ST Eastbound				
Start Time	Left	Thru	Right	Peds	Left	Thru	Right	Peds	Left	Thru	Right	Peds	Left	Thru	Right	Peds	Int. Total
07:00	0	0	0	2	0	0	0	2	0	3	0	2	0	0	0	7	16
07:15	0	2	0	1	0	0	0	4	0	0	0	4	0	0	0	0	11
07:30	0	0	0	1	0	0	0	2	0	0	0	1	0	1	0	0	5
07:45	0	0	0	4	0	0	0	0	1	2	0	0	0	0	0	0	7
Total	0	2	0	8	0	0	0	8	1	5	0	7	0	1	0	7	39
08:00	0	2	0	3	0	1	0	2	0	0	0	0	0	0	0	0	8
08:15	0	3	0	1	0	0	0	1	0	2	0	4	0	1	0	1	13
08:30	0	0	0	2	0	0	0	3	0	0	0	3	0	0	0	1	9
08:45	0	1	1	0	0	1	0	2	0	0	0	4	0	0	0	0	9
Total	0	6	1	6	0	2	0	8	0	2	0	11	0	1	0	2	39
*** BREAK ***																	
16:00	0	1	0	4	0	0	0	0	0	0	0	4	0	0	0	6	15
16:15	0	1	0	4	1	0	0	2	0	1	0	0	0	0	0	5	14
16:30	0	4	0	1	0	0	0	3	1	0	0	4	0	1	0	3	17
16:45	0	1	1	6	0	0	0	3	0	1	0	3	0	0	2	3	20
Total	0	7	1	15	1	0	0	8	1	2	0	11	0	1	2	17	66
17:00	0	2	0	0	0	0	0	5	0	3	0	2	0	0	0	0	12
17:15	0	0	0	3	1	0	0	4	0	1	1	1	0	0	0	4	15
17:30	0	0	1	2	0	0	0	3	0	1	0	0	0	1	0	1	9
17:45	0	0	0	1	0	1	0	4	0	1	0	1	0	0	0	1	9
Total	0	2	1	6	1	1	0	16	0	6	1	4	0	1	0	6	45
Grand Total	0	17	3	35	2	3	0	40	2	15	1	33	0	4	2	32	189
Apprch %	0	30.9	5.5	63.6	4.4	6.7	0	88.9	3.9	29.4	2	64.7	0	10.5	5.3	84.2	
Total %	0	9	1.6	18.5	1.1	1.6	0	21.2	1.1	7.9	0.5	17.5	0	2.1	1.1	16.9	

True Count

6520 Lemarand Ave
San Diego, CA 92115

File Name : 22.NAPA ST.RILEY ST.PED-BIKE
Site Code : 00000000
Start Date : 2/5/2013
Page No : 2

	NAPA ST Southbound					RILEY ST Westbound					NAPA ST Northbound					RILEY ST Eastbound					
Start Time	**Left**	**Thru**	**Right**	**Peds**	**App. Total**	**Left**	**Thru**	**Right**	**Peds**	**App. Total**	**Left**	**Thru**	**Right**	**Peds**	**App. Total**	**Left**	**Thru**	**Right**	**Peds**	**App. Total**	**Int. Total**
Peak Hour Analysis From 07:00 to 11:45 - Peak 1 of 1																					
Peak Hour for Entire Intersection Begins at 07:00																					
07:00	0	0	0	2	2	0	0	0	2	2	0	3	0	2	5	0	0	0	7	7	16
07:15	0	2	0	1	3	0	0	0	4	4	0	0	0	4	4	0	0	0	0	0	11
07:30	0	0	0	1	1	0	0	0	2	2	0	0	0	1	1	0	1	0	0	1	5
07:45	0	0	0	4	4	0	0	0	0	0	1	2	0	0	3	0	0	0	0	0	7
Total Volume	0	2	0	8	10	0	0	0	8	8	1	5	0	7	13	0	1	0	7	8	39
% App. Total	0	20	0	80		0	0	0	100		7.7	38.5	0	53.8		0	12.5	0	87.5		
PHF	.000	.250	.000	.500	.625	.000	.000	.000	.500	.500	.250	.417	.000	.438	.650	.000	.250	.000	.250	.286	.609

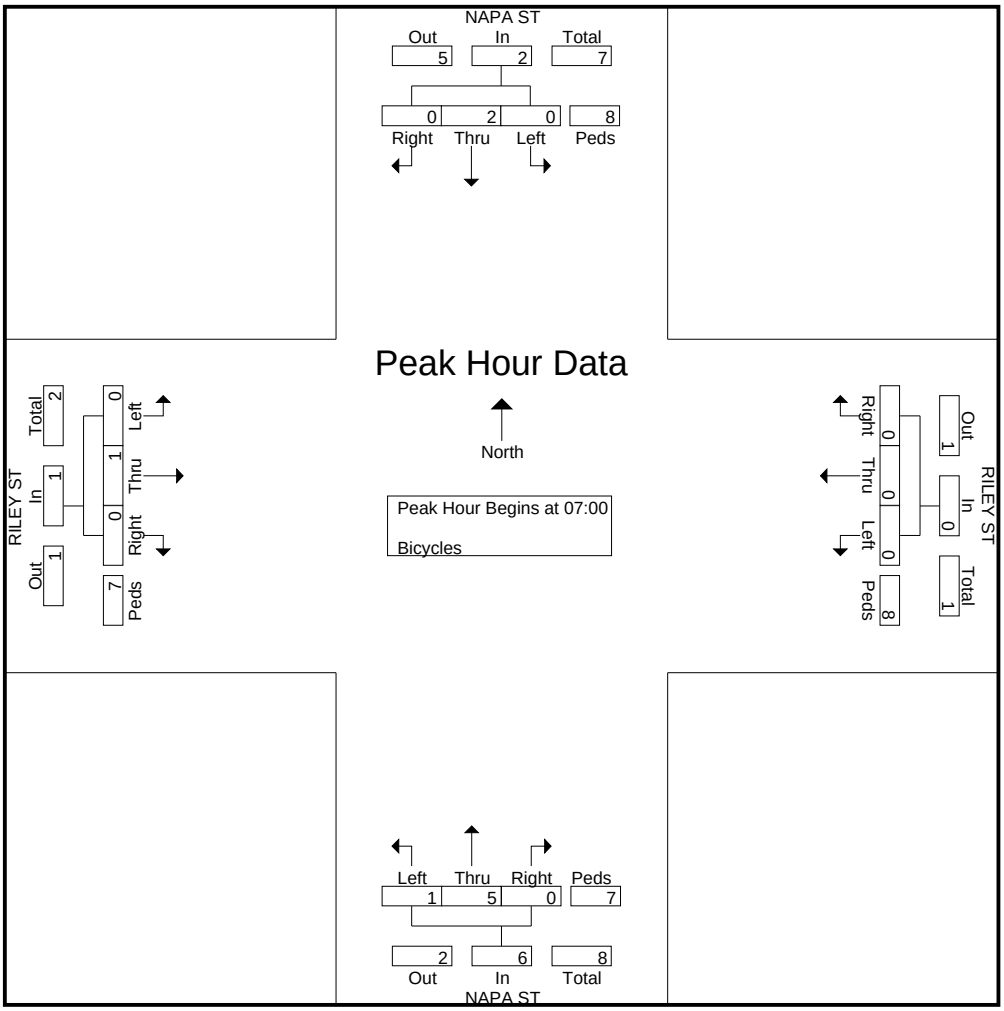

True Count

6520 Lemarand Ave
San Diego, CA 92115

File Name : 22.NAPA ST.RILEY ST.PED-BIKE
Site Code : 00000000
Start Date : 2/5/2013
Page No : 3

	NAPA ST Southbound					RILEY ST Westbound					NAPA ST Northbound					RILEY ST Eastbound					
Start Time	**Left**	**Thru**	**Right**	**Peds**	**App. Total**	**Left**	**Thru**	**Right**	**Peds**	**App. Total**	**Left**	**Thru**	**Right**	**Peds**	**App. Total**	**Left**	**Thru**	**Right**	**Peds**	**App. Total**	**Int. Total**
Peak Hour Analysis From 12:00 to 17:45 - Peak 1 of 1																					
Peak Hour for Entire Intersection Begins at 16:00																					
16:00	0	1	0	4	5	0	0	0	0	0	0	0	0	4	4	0	0	0	6	6	15
16:15	0	1	0	4	5	1	0	0	2	3	0	1	0	0	1	0	0	0	5	5	14
16:30	0	4	0	1	5	0	0	0	3	3	1	0	0	4	5	0	1	0	3	4	17
16:45	0	1	1	6	8	0	0	0	3	3	0	1	0	3	4	0	0	2	3	5	20
Total Volume	0	7	1	15	23	1	0	0	8	9	1	2	0	11	14	0	1	2	17	20	66
% App. Total	0	30.4	4.3	65.2		11.1	0	0	88.9		7.1	14.3	0	78.6		0	5	10	85		
PHF	.000	.438	.250	.625	.719	.250	.000	.000	.667	.750	.250	.500	.000	.688	.700	.000	.250	.250	.708	.833	.825

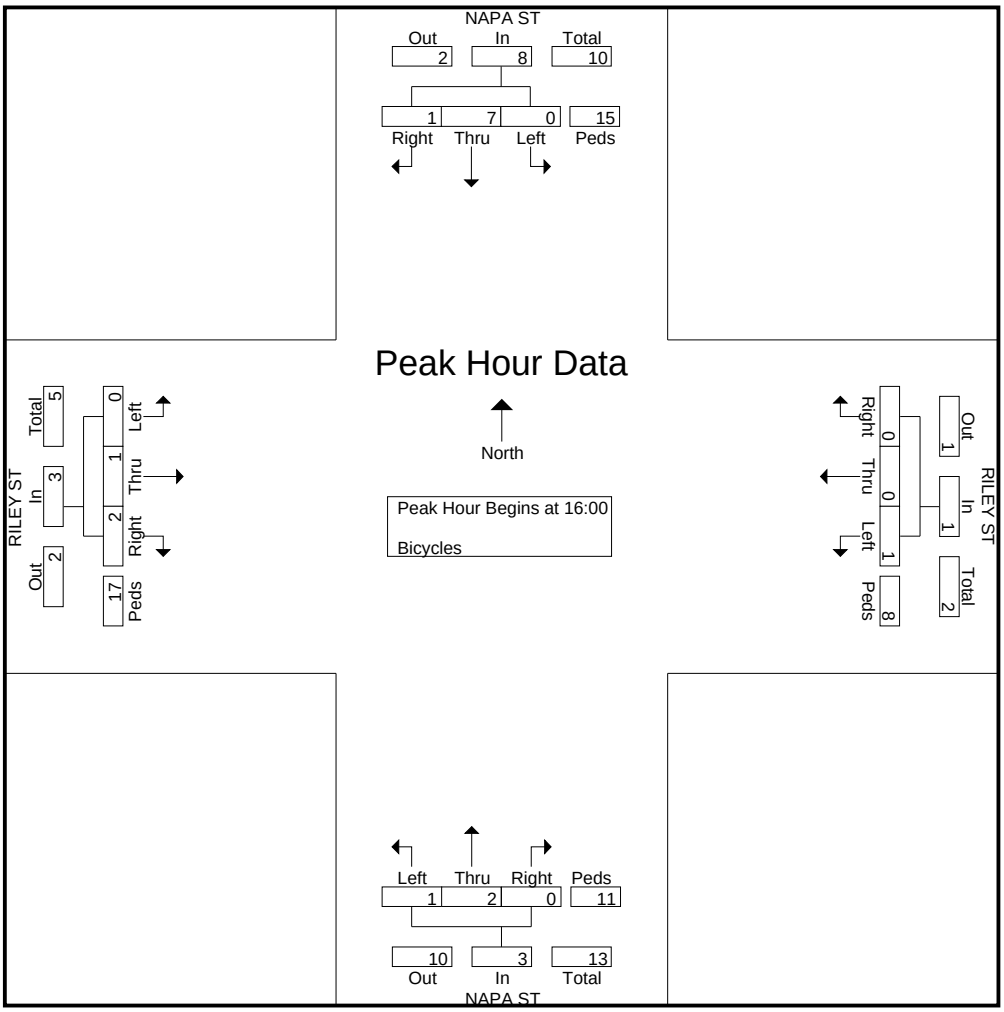

True Count

6520 Lemarand Ave
San Diego, CA 92115

File Name : 23.NAPA ST.FRIARS RD.PED-BIKE
Site Code : 00000000
Start Date : 2/5/2013
Page No : 1

Groups Printed- Bicycles

	NAPA ST Southbound				FRIARS RD Westbound				Northbound				FRIARS RD Eastbound				
Start Time	Left	Thru	Right	Peds	Left	Thru	Right	Peds	Left	Thru	Right	Peds	Left	Thru	Right	Peds	Int. Total
07:00	0	0	0	6	0	2	2	2	0	0	0	2	1	1	0	0	16
07:15	1	0	1	6	0	1	1	1	0	0	0	0	0	0	0	0	11
07:30	0	0	1	4	0	0	0	5	0	0	0	0	0	2	0	0	12
07:45	1	0	0	7	0	0	0	2	0	0	0	0	2	2	0	0	14
Total	2	0	2	23	0	3	3	10	0	0	0	2	3	5	0	0	53
08:00	1	0	1	3	0	0	0	1	0	0	0	0	0	1	0	0	7
08:15	3	0	0	9	0	0	0	0	0	0	0	0	3	1	0	1	17
08:30	0	0	0	5	0	2	1	1	0	0	0	0	0	2	0	0	11
08:45	1	0	0	7	0	1	0	4	0	0	0	0	0	1	0	0	14
Total	5	0	1	24	0	3	1	6	0	0	0	0	3	5	0	1	49

*** BREAK ***

16:00	1	0	0	6	0	1	0	3	0	0	0	0	0	3	0	0	14
16:15	1	0	1	10	0	2	0	3	0	0	0	0	0	0	0	0	17
16:30	1	0	3	13	0	4	0	7	0	0	0	0	0	2	0	0	30
16:45	2	0	0	3	0	2	1	5	0	0	0	0	0	2	0	0	15
Total	5	0	4	32	0	9	1	18	0	0	0	0	0	7	0	0	76
17:00	1	0	1	14	0	2	1	2	0	0	0	0	2	1	0	0	24
17:15	2	0	1	14	0	0	0	2	0	0	0	0	1	2	0	0	22
17:30	0	0	0	11	0	1	1	3	0	0	0	0	1	0	0	0	17
17:45	0	0	0	4	0	1	0	3	0	0	0	0	0	1	0	0	9
Total	3	0	2	43	0	4	2	10	0	0	0	0	4	4	0	0	72
Grand Total	15	0	9	122	0	19	7	44	0	0	0	2	10	21	0	1	250
Apprch %	10.3	0	6.2	83.6	0	27.1	10	62.9	0	0	0	100	31.2	65.6	0	3.1	
Total %	6	0	3.6	48.8	0	7.6	2.8	17.6	0	0	0	0.8	4	8.4	0	0.4	

True Count

6520 Lemarand Ave
San Diego, CA 92115

File Name : 23.NAPA ST.FRIARS RD.PED-BIKE
Site Code : 00000000
Start Date : 2/5/2013
Page No : 2

	NAPA ST Southbound					FRIARS RD Westbound					Northbound					FRIARS RD Eastbound					
Start Time	**Left**	**Thru**	**Right**	**Peds**	**App. Total**	**Left**	**Thru**	**Right**	**Peds**	**App. Total**	**Left**	**Thru**	**Right**	**Peds**	**App. Total**	**Left**	**Thru**	**Right**	**Peds**	**App. Total**	**Int. Total**
Peak Hour Analysis From 07:00 to 11:45 - Peak 1 of 1																					
Peak Hour for Entire Intersection Begins at 07:00																					
07:00	0	0	0	6	6	0	2	2	2	6	0	0	0	2	2	1	1	0	0	2	16
07:15	1	0	1	6	8	0	1	1	1	3	0	0	0	0	0	0	0	0	0	0	11
07:30	0	0	1	4	5	0	0	0	5	5	0	0	0	0	0	0	2	0	0	2	12
07:45	1	0	0	7	8	0	0	0	2	2	0	0	0	0	0	2	2	0	0	4	14
Total Volume	2	0	2	23	27	0	3	3	10	16	0	0	0	2	2	3	5	0	0	8	53
% App. Total	7.4	0	7.4	85.2		0	18.8	18.8	62.5		0	0	0	100		37.5	62.5	0	0		
PHF	.500	.000	.500	.821	.844	.000	.375	.375	.500	.667	.000	.000	.000	.250	.250	.375	.625	.000	.000	.500	.828

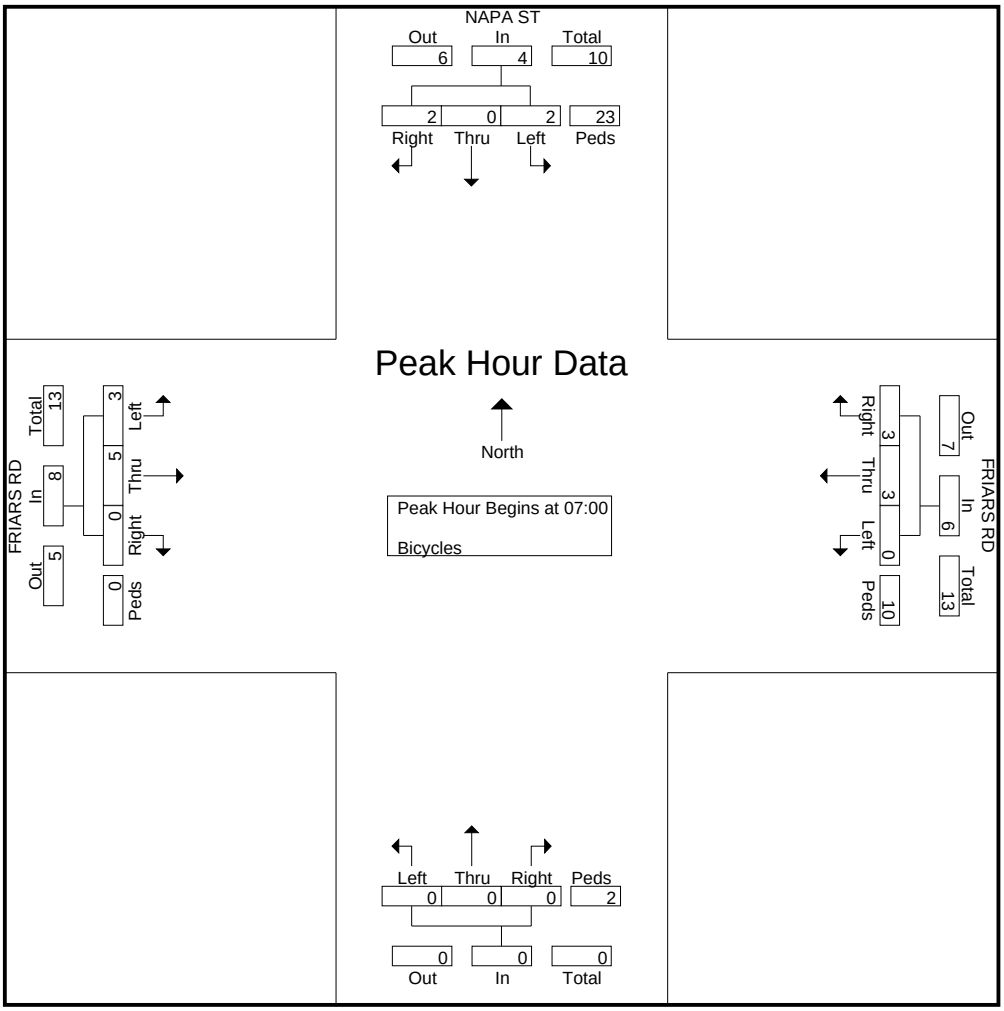

True Count

6520 Lemarand Ave
San Diego, CA 92115

File Name : 23.NAPA ST.FRIARS RD.PED-BIKE
Site Code : 00000000
Start Date : 2/5/2013
Page No : 3

	NAPA ST Southbound					FRIARS RD Westbound					Northbound					FRIARS RD Eastbound					
Start Time	**Left**	**Thru**	**Right**	**Peds**	**App. Total**	**Left**	**Thru**	**Right**	**Peds**	**App. Total**	**Left**	**Thru**	**Right**	**Peds**	**App. Total**	**Left**	**Thru**	**Right**	**Peds**	**App. Total**	**Int. Total**
Peak Hour Analysis From 12:00 to 17:45 - Peak 1 of 1																					
Peak Hour for Entire Intersection Begins at 16:30																					
16:30	1	0	3	13	17	0	4	0	7	11	0	0	0	0	0	0	2	0	0	2	30
16:45	2	0	0	3	5	0	2	1	5	8	0	0	0	0	0	0	2	0	0	2	15
17:00	1	0	1	14	16	0	2	1	2	5	0	0	0	0	0	2	1	0	0	3	24
17:15	2	0	1	14	17	0	0	0	2	2	0	0	0	0	0	1	2	0	0	3	22
Total Volume	6	0	5	44	55	0	8	2	16	26	0	0	0	0	0	3	7	0	0	10	91
% App. Total	10.9	0	9.1	80		0	30.8	7.7	61.5		0	0	0	0		30	70	0	0		
PHF	.750	.000	.417	.786	.809	.000	.500	.500	.571	.591	.000	.000	.000	.000	.000	.375	.875	.000	.000	.833	.758

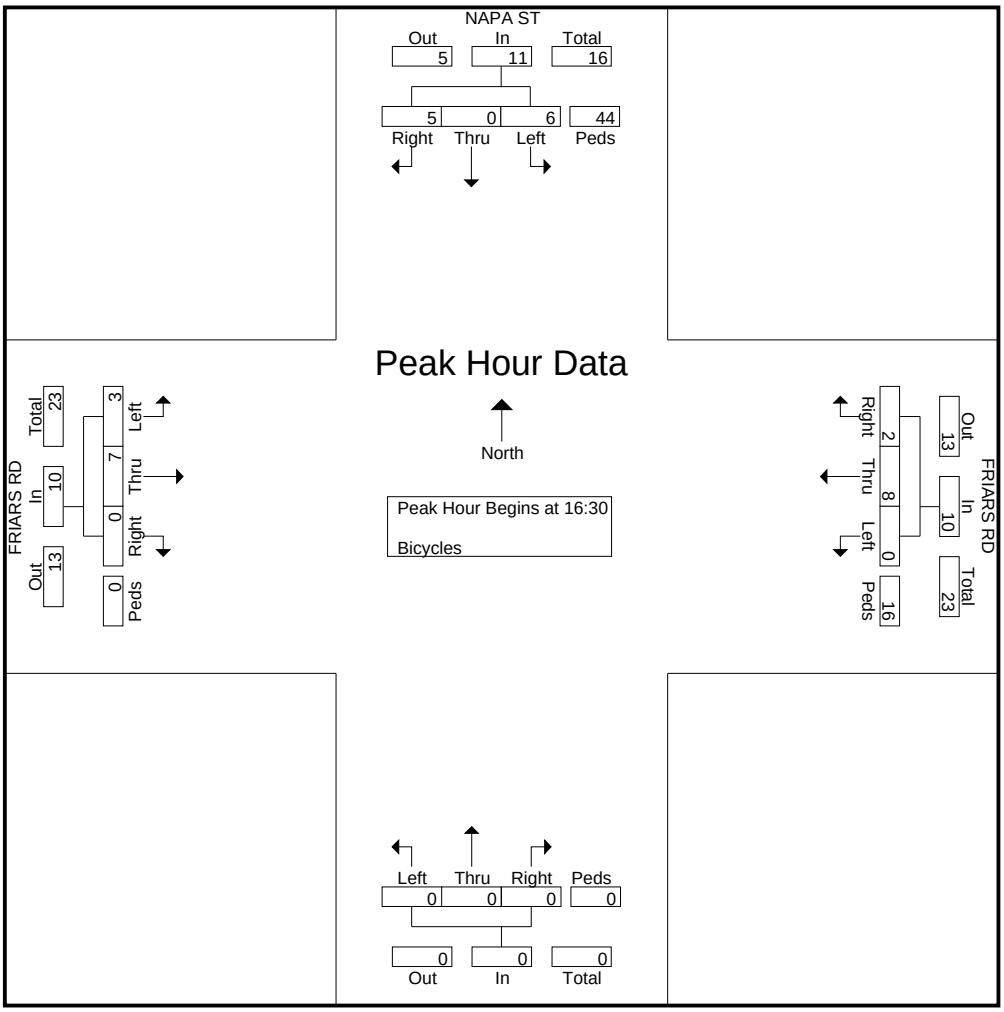

True Count

6520 Lemarand Ave
San Diego, CA 92115

File Name : 24.COLUSA ST.FRIARS RD.PED-BIKE
Site Code : 00000000
Start Date : 2/5/2013
Page No : 1

Groups Printed- Bicycles

	COLUSA ST Southbound				FRIARS RD Westbound				COLUSA ST Northbound				FRIARS RD Eastbound				
Start Time	Left	Thru	Right	Peds	Left	Thru	Right	Peds	Left	Thru	Right	Peds	Left	Thru	Right	Peds	Int. Total
07:00	0	0	1	3	0	2	0	0	0	0	0	8	0	1	0	0	15
07:15	0	0	0	0	0	2	0	0	0	0	0	2	0	1	0	3	8
07:30	0	0	0	1	0	1	0	0	0	0	0	5	0	2	0	0	9
07:45	0	0	0	1	0	1	0	0	0	0	0	3	0	0	0	2	7
Total	0	0	1	5	0	6	0	0	0	0	0	18	0	4	0	5	39
08:00	0	0	0	2	0	3	0	0	0	0	0	4	0	2	0	3	14
08:15	0	0	1	6	0	0	0	0	0	0	0	6	0	3	0	3	19
08:30	0	0	0	2	0	0	0	0	0	0	0	5	0	1	0	0	8
08:45	0	0	0	3	0	1	0	0	0	0	0	1	0	0	0	1	6
Total	0	0	1	13	0	4	0	0	0	0	0	16	0	6	0	7	47
*** BREAK ***																	
16:00	0	0	1	1	0	0	0	0	0	0	0	3	0	2	0	1	8
16:15	0	0	0	6	0	3	0	0	0	0	0	1	0	3	0	2	15
16:30	0	0	0	7	0	3	0	0	0	0	0	3	0	3	0	2	18
16:45	0	0	0	3	0	4	0	0	0	0	0	3	0	4	1	3	18
Total	0	0	1	17	0	10	0	0	0	0	0	10	0	12	1	8	59
17:00	0	0	0	2	0	0	0	0	0	0	0	1	0	3	0	1	7
17:15	0	0	0	9	0	0	0	0	0	0	0	3	0	3	0	1	16
17:30	0	0	0	1	0	2	0	0	0	0	0	4	0	1	0	1	9
17:45	0	0	0	4	0	1	0	0	0	0	0	3	0	2	0	2	12
Total	0	0	0	16	0	3	0	0	0	0	0	11	0	9	0	5	44
Grand Total	0	0	3	51	0	23	0	0	0	0	0	55	0	31	1	25	189
Apprch %	0	0	5.6	94.4	0	100	0	0	0	0	0	100	0	54.4	1.8	43.9	
Total %	0	0	1.6	27	0	12.2	0	0	0	0	0	29.1	0	16.4	0.5	13.2	

True Count

6520 Lemarand Ave
San Diego, CA 92115

File Name : 24.COLUSA ST.FRIARS RD.PED-BIKE
Site Code : 00000000
Start Date : 2/5/2013
Page No : 2

	COLUSA ST Southbound					FRIARS RD Westbound					COLUSA ST Northbound					FRIARS RD Eastbound					
Start Time	**Left**	**Thru**	**Right**	**Peds**	**App. Total**	**Left**	**Thru**	**Right**	**Peds**	**App. Total**	**Left**	**Thru**	**Right**	**Peds**	**App. Total**	**Left**	**Thru**	**Right**	**Peds**	**App. Total**	**Int. Total**
Peak Hour Analysis From 07:00 to 11:45 - Peak 1 of 1																					
Peak Hour for Entire Intersection Begins at 07:30																					
07:30	0	0	0	1	1	0	1	0	0	1	0	0	0	5	5	0	2	0	0	2	9
07:45	0	0	0	1	1	0	1	0	0	1	0	0	0	3	3	0	0	0	2	2	7
08:00	0	0	0	2	2	0	3	0	0	3	0	0	0	4	4	0	2	0	3	5	14
08:15	0	0	1	6	7	0	0	0	0	0	0	0	0	6	6	0	3	0	3	6	19
Total Volume	0	0	1	10	11	0	5	0	0	5	0	0	0	18	18	0	7	0	8	15	49
% App. Total	0	0	9.1	90.9		0	100	0	0		0	0	0	100		0	46.7	0	53.3		
PHF	.000	.000	.250	.417	.393	.000	.417	.000	.000	.417	.000	.000	.000	.750	.750	.000	.583	.000	.667	.625	.645

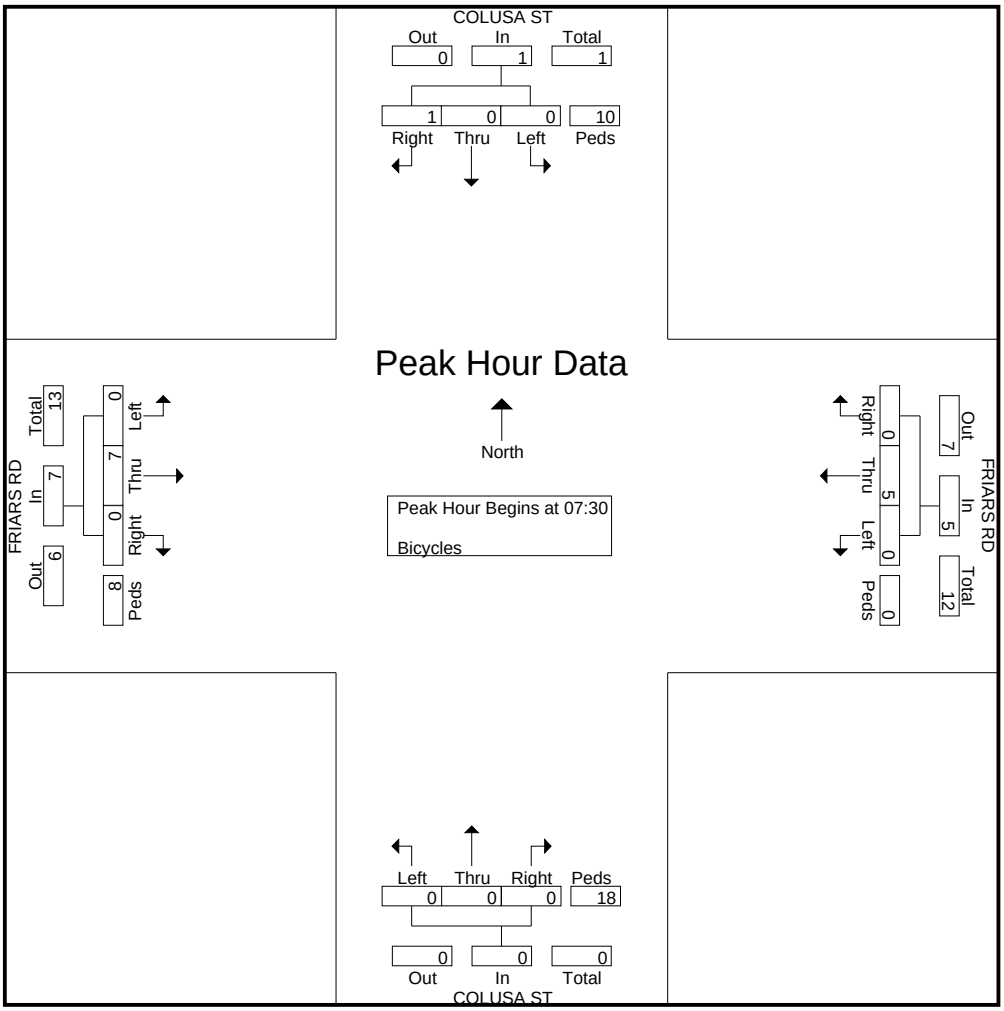

True Count

6520 Lemarand Ave
San Diego, CA 92115

File Name : 24.COLUSA ST.FRIARS RD.PED-BIKE
Site Code : 00000000
Start Date : 2/5/2013
Page No : 3

	COLUSA ST Southbound					FRIARS RD Westbound					COLUSA ST Northbound					FRIARS RD Eastbound					
Start Time	Left	Thru	Right	Peds	App. Total	Left	Thru	Right	Peds	App. Total	Left	Thru	Right	Peds	App. Total	Left	Thru	Right	Peds	App. Total	Int. Total
Peak Hour Analysis From 12:00 to 17:45 - Peak 1 of 1																					
Peak Hour for Entire Intersection Begins at 16:00																					
16:00	0	0	1	1	2	0	0	0	0	0	0	0	0	3	3	0	2	0	1	3	8
16:15	0	0	0	6	6	0	3	0	0	3	0	0	0	1	1	0	3	0	2	5	15
16:30	0	0	0	7	7	0	3	0	0	3	0	0	0	3	3	0	3	0	2	5	18
16:45	0	0	0	3	3	0	4	0	0	4	0	0	0	3	3	0	4	1	3	8	18
Total Volume	0	0	1	17	18	0	10	0	0	10	0	0	0	10	10	0	12	1	8	21	59
% App. Total	0	0	5.6	94.4		0	100	0	0		0	0	0	100		0	57.1	4.8	38.1		
PHF	.000	.000	.250	.607	.643	.000	.625	.000	.000	.625	.000	.000	.000	.833	.833	.000	.750	.250	.667	.656	.819

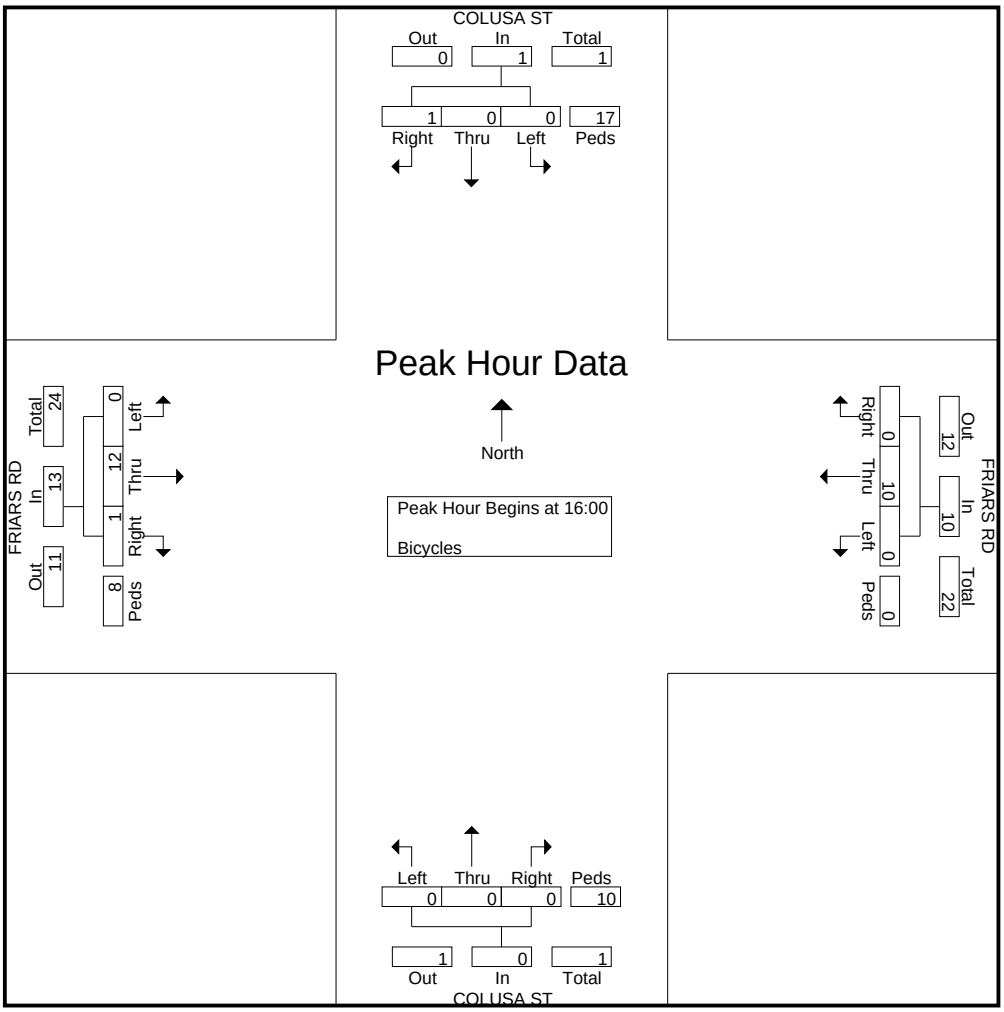

Morena Blvd Station Area Planning Study

Appendix C:

Daily Traffic Volume Count Data

MetroCount Traffic Executive
Vehicle Counts

2009 -- English (ENU)

Datasets:

Site:	**01.GESNER ST (MORENA BLVD - DENVER ST) EASTBOUND**
Direction:	6 - West bound A>B, East bound B>A. **Lane:** 0
Survey Duration:	15:39 Monday, February 11, 2013 => 5:33 Monday, February 18, 2013
File:	0090118Feb2013.EC0 (Base)
Data type:	Axle sensors - Paired (Class/Speed/Count)

Profile:

Filter time:	**0:00 Tuesday, February 12, 2013 => 0:00 Sunday, February 17, 2013**
Included classes:	1, 2, 3, 4, 5, 6, 7, 8, 9, 10, 11, 12, 13
Direction:	East (bound)

* Tuesday, February 12, 2013 - Total=1701, 15 minute drops

0000	0100	0200	0300	0400	0500	0600	0700	0800	0900	1000	1100	1200	1300	1400	1500	1600	1700	1800	1900	2000	2100	2200	2300	
2	**2**	**2**	**1**	**4**	**16**	**62**	**124**	**103**	**128**	**90**	**99**	**109**	**102**	**123**	**143**	**141**	**143**	**115**	**60**	**59**	**35**	**23**	**15**	
0	0	1	1	0	2	9	28	27	**32**	27	24	23	22	20	39	26	**42**	35	16	18	9	8	7	3
2	1	0	0	1	3	9	31	29	**39**	19	32	25	31	36	30	39	**40**	35	12	18	12	6	3	1
0	1	1	0	1	5	24	33	20	**30**	19	24	27	29	33	29	**38**	37	21	21	13	8	4	2	2
0	0	0	0	2	6	20	32	**27**	27	25	19	34	20	34	45	**38**	24	24	11	10	6	5	3	1

AM Peak 0845 - 0945 (128), AM PHF=0.82 PM Peak 1630 - 1730 (158), PM PHF=0.94

* Wednesday, February 13, 2013 - Total=1723, 15 minute drops

0000	0100	0200	0300	0400	0500	0600	0700	0800	0900	1000	1100	1200	1300	1400	1500	1600	1700	1800	1900	2000	2100	2200	2300	
7	**3**	**1**	**2**	**9**	**18**	**57**	**118**	**127**	**109**	**81**	**129**	**117**	**108**	**100**	**136**	**131**	**153**	**109**	**68**	**69**	**39**	**23**	**9**	
3	1	1	1	1	3	8	24	27	**32**	19	30	24	40	23	33	31	27	**40**	16	10	11	3	3	1
1	0	0	0	1	3	10	32	28	**33**	13	36	36	24	23	38	28	**45**	29	14	22	10	8	3	2
2	1	0	0	3	4	24	29	**46**	24	29	24	29	20	23	36	37	**39**	22	18	20	12	6	1	2
1	1	0	1	4	8	15	33	**26**	20	20	39	28	24	31	29	35	**42**	18	20	17	6	6	2	1

AM Peak 0830 - 0930 (137), AM PHF=0.74 PM Peak 1715 - 1815 (166), PM PHF=0.92

* Thursday, February 14, 2013 - Total=1811, 15 minute drops

0000	0100	0200	0300	0400	0500	0600	0700	0800	0900	1000	1100	1200	1300	1400	1500	1600	1700	1800	1900	2000	2100	2200	2300	
6	**4**	**3**	**1**	**3**	**22**	**51**	**110**	**128**	**101**	**95**	**100**	**127**	**139**	**116**	**142**	**144**	**188**	**101**	**84**	**54**	**43**	**30**	**19**	
1	0	2	1	0	6	4	24	30	**41**	27	25	32	31	23	37	32	**48**	34	26	17	7	14	6	2
2	2	1	0	0	7	14	25	**27**	20	21	21	31	33	25	32	33	**50**	27	17	11	16	8	9	3
2	2	0	0	2	3	20	27	**36**	22	25	30	30	32	30	32	35	**53**	18	26	10	11	6	1	2
1	0	0	0	1	6	13	34	**35**	18	22	24	34	43	38	41	**44**	37	22	15	16	9	2	3	0

AM Peak 0815 - 0915 (139), AM PHF=0.85 PM Peak 1645 - 1745 (195), PM PHF=0.92

* Friday, February 15, 2013 - Total=1780, 15 minute drops

0000	0100	0200	0300	0400	0500	0600	0700	0800	0900	1000	1100	1200	1300	1400	1500	1600	1700	1800	1900	2000	2100	2200	2300	
7	**12**	**3**	**4**	**4**	**14**	**33**	**89**	**116**	**109**	**97**	**121**	**128**	**111**	**124**	**146**	**145**	**158**	**130**	**88**	**43**	**47**	**35**	**16**	
2	2	1	1	1	1	3	15	25	26	13	21	**32**	27	29	44	30	**48**	43	22	12	12	11	6	3
3	2	0	3	1	3	9	23	25	23	34	30	**35**	29	20	34	38	**39**	35	29	11	13	10	3	3
2	5	2	0	0	6	10	32	36	24	23	29	**34**	34	42	42	**41**	39	20	19	6	14	8	5	7
0	3	0	0	2	4	11	19	30	36	27	**41**	27	21	33	26	**36**	32	32	18	14	8	6	2	4

AM Peak 1145 - 1245 (142), AM PHF=0.87 PM Peak 1630 - 1730 (164), PM PHF=0.85

* Saturday, February 16, 2013 - Total=1876, 15 minute drops

0000	0100	0200	0300	0400	0500	0600	0700	0800	0900	1000	1100	1200	1300	1400	1500	1600	1700	1800	1900	2000	2100	2200	2300	
17	**7**	**10**	**3**	**2**	**7**	**21**	**32**	**52**	**88**	**190**	**235**	**218**	**186**	**166**	**118**	**121**	**111**	**86**	**69**	**42**	**44**	**34**	**17**	
3	1	2	0	0	1	3	4	8	14	51	**76**	58	36	45	41	26	24	28	20	12	13	13	3	-
3	1	2	2	1	4	3	5	17	22	64	**50**	61	56	43	37	26	25	22	16	11	8	5	7	-
7	3	3	1	1	1	7	11	12	26	42	**63**	51	45	47	18	37	32	16	16	8	18	7	4	-
4	2	3	0	0	1	8	12	15	26	33	**46**	48	49	31	22	32	30	20	17	11	5	9	3	-

AM Peak 1100 - 1200 (235), AM PHF=0.77

MetroCount Traffic Executive
Vehicle Counts

2010 -- English (ENU)

Datasets:

Site:	**01.GESNER ST (MORENA BLVD - DENVER ST) WESTBOUND**
Direction:	6 - West bound A>B, East bound B>A. **Lane:** 0
Survey Duration:	15:39 Monday, February 11, 2013 => 5:33 Monday, February 18, 2013
File:	0090118Feb2013.EC0 (Base)
Data type:	Axle sensors - Paired (Class/Speed/Count)

Profile:

Filter time:	**0:00 Tuesday, February 12, 2013 => 0:00 Sunday, February 17, 2013**
Included classes:	1, 2, 3, 4, 5, 6, 7, 8, 9, 10, 11, 12, 13
Direction:	West (bound)

* Tuesday, February 12, 2013 - Total=1418, 15 minute drops

0000	0100	0200	0300	0400	0500	0600	0700	0800	0900	1000	1100	1200	1300	1400	1500	1600	1700	1800	1900	2000	2100	2200	2300	
4	**0**	**0**	**2**	**2**	**8**	**20**	**81**	**104**	**85**	**102**	**90**	**93**	**103**	**95**	**101**	**109**	**139**	**104**	**57**	**55**	**30**	**26**	**8**	
2	0	0	1	0	1	5	13	**22**	21	25	23	27	28	19	22	27	**37**	29	11	13	10	8	4	4
2	0	0	0	0	1	3	14	**26**	20	31	23	23	28	22	22	22	**28**	28	20	14	7	8	2	0
0	0	0	0	1	4	5	25	**32**	19	23	26	20	21	27	23	31	**40**	25	12	17	5	3	1	0
0	0	0	1	1	2	7	**29**	24	25	23	18	23	26	27	34	29	**34**	22	14	11	8	7	1	1

AM Peak 0745 - 0845 (109), AM PHF=0.85 PM Peak 1700 - 1800 (139), PM PHF=0.87

* Wednesday, February 13, 2013 - Total=1485, 15 minute drops

0000	0100	0200	0300	0400	0500	0600	0700	0800	0900	1000	1100	1200	1300	1400	1500	1600	1700	1800	1900	2000	2100	2200	2300	
5	**2**	**5**	**1**	**4**	**10**	**22**	**81**	**87**	**80**	**82**	**91**	**101**	**97**	**111**	**133**	**122**	**138**	**99**	**75**	**65**	**33**	**26**	**15**	
4	0	2	0	0	2	2	16	16	22	19	20	**23**	23	24	37	27	**39**	28	20	19	12	8	7	3
0	0	1	1	1	1	4	14	17	24	17	19	**33**	22	33	32	30	**39**	21	25	16	10	8	5	1
0	1	1	0	1	3	6	27	23	12	14	**21**	18	21	25	26	25	**31**	31	16	20	7	5	1	0
1	1	1	0	2	4	10	24	31	22	32	**31**	27	31	29	38	**40**	29	19	14	10	4	5	2	2

AM Peak 1130 - 1230 (108), AM PHF=0.82 PM Peak 1645 - 1745 (149), PM PHF=0.93

* Thursday, February 14, 2013 - Total=1500, 15 minute drops

0000	0100	0200	0300	0400	0500	0600	0700	0800	0900	1000	1100	1200	1300	1400	1500	1600	1700	1800	1900	2000	2100	2200	2300	
6	**6**	**3**	**3**	**5**	**17**	**24**	**78**	**96**	**84**	**71**	**86**	**124**	**110**	**107**	**95**	**118**	**154**	**102**	**79**	**44**	**39**	**30**	**19**	
3	2	1	0	1	7	3	13	21	16	13	14	**28**	26	25	22	28	**40**	25	24	11	11	6	5	2
1	2	2	1	1	4	2	19	22	15	22	27	**43**	26	21	21	25	**39**	27	23	10	6	14	6	2
0	1	0	2	0	3	7	19	25	27	16	17	**26**	27	36	21	30	**45**	26	22	9	13	5	4	2
2	1	0	0	3	3	12	27	28	26	20	**28**	27	31	25	31	**35**	30	24	10	14	9	5	4	0

AM Peak 1145 - 1245 (125), AM PHF=0.73 PM Peak 1645 - 1745 (159), PM PHF=0.88

* Friday, February 15, 2013 - Total=1423, 15 minute drops

0000	0100	0200	0300	0400	0500	0600	0700	0800	0900	1000	1100	1200	1300	1400	1500	1600	1700	1800	1900	2000	2100	2200	2300	
6	**8**	**5**	**1**	**7**	**10**	**16**	**47**	**75**	**76**	**93**	**91**	**105**	**81**	**103**	**118**	**136**	**139**	**122**	**74**	**33**	**38**	**24**	**15**	
2	1	2	1	2	1	3	8	16	19	19	**23**	27	20	33	38	**43**	41	34	16	9	8	5	7	3
2	0	3	0	2	2	5	11	16	11	21	**29**	23	21	20	33	**42**	36	29	20	4	9	6	3	1
2	4	0	0	1	1	5	14	13	23	**27**	20	31	19	25	16	**31**	35	26	19	12	10	6	2	4
0	3	0	0	2	6	3	14	30	23	**26**	19	24	21	25	**31**	20	27	33	19	8	11	7	3	2

AM Peak 1030 - 1130 (105), AM PHF=0.91 PM Peak 1545 - 1645 (147), PM PHF=0.85

* Saturday, February 16, 2013 - Total=1680, 15 minute drops

0000	0100	0200	0300	0400	0500	0600	0700	0800	0900	1000	1100	1200	1300	1400	1500	1600	1700	1800	1900	2000	2100	2200	2300	
10	**9**	**11**	**6**	**4**	**6**	**10**	**25**	**53**	**79**	**147**	**174**	**203**	**206**	**168**	**115**	**124**	**89**	**67**	**63**	**36**	**34**	**20**	**21**	
3	3	4	0	2	2	3	6	11	17	28	50	**53**	48	56	24	26	20	26	17	12	11	6	8	-
1	2	1	2	1	0	3	8	16	14	31	37	**48**	60	48	33	27	28	14	16	7	5	6	3	-
4	1	3	2	0	4	1	4	17	22	41	**48**	46	57	31	30	34	17	13	13	11	10	4	7	-
2	3	3	2	1	0	3	7	9	26	47	**39**	56	41	33	28	37	24	14	17	6	8	4	3	-

AM Peak 1130 - 1230 (188), AM PHF=0.89

MetroCount Traffic Executive
Event Counts

2042 -- English (ENU)

Datasets:

Site:	**02.CLAIREMONT DR (I-5 NB RAMPS - DENVER ST) EASTBOUND**
Input A:	2 - East bound. - Lane= 0, Added to totals. (/2.000)
Input B:	4 - West bound. - Lane= 0, Excluded from totals.
Survey Duration:	21:36 Monday, February 18, 2013 => 13:09 Sunday, February 24, 2013
File:	0090224Feb2013.EC0 (Plus)
Data type:	Axle sensors - Separate (Count)

Profile:

Filter time:	**0:00 Tuesday, February 19, 2013 => 0:00 Sunday, February 24, 2013**

* Tuesday, February 19, 2013=13241, 15 minute drops

0000	0100	0200	0300	0400	0500	0600	0700	0800	0900	1000	1100	1200	1300	1400	1500	1600	1700	1800	1900	2000	2100	2200	2300	
90	**49**	**19**	**18**	**37**	**77**	**262**	**509**	**735**	**621**	**636**	**788**	**757**	**765**	**881**	**1250**	**1315**	**1388**	**1005**	**616**	**503**	**464**	**318**	**144**	
33	18	9	1	4	11	40	117	148	163	146	186	**193**	179	182	250	305	**373**	260	180	132	117	98	40	22
26	12	3	6	7	13	53	96	182	161	147	201	**203**	194	232	345	344	**375**	274	139	136	134	79	54	22
19	8	3	2	9	24	64	138	211	154	183	173	**190**	198	237	341	321	**343**	250	146	114	127	76	27	23
12	11	4	9	17	30	105	159	194	144	161	**229**	171	194	230	315	**346**	297	221	151	122	86	65	23	13

AM Peak 1145 - 1245 (814), AM PHF=0.89 PM Peak 1645 - 1745 (1436), PM PHF=0.96

* Wednesday, February 20, 2013=13462, 15 minute drops

0000	0100	0200	0300	0400	0500	0600	0700	0800	0900	1000	1100	1200	1300	1400	1500	1600	1700	1800	1900	2000	2100	2200	2300	
80	**40**	**33**	**27**	**30**	**83**	**237**	**407**	**651**	**571**	**630**	**688**	**883**	**774**	**950**	**1203**	**1368**	**1465**	**1158**	**713**	**560**	**458**	**289**	**170**	
22	9	11	7	5	17	31	80	132	157	165	166	**198**	198	216	263	339	**350**	308	210	142	129	78	62	28
22	10	8	5	5	5	42	96	137	129	132	145	**216**	207	242	334	324	**393**	319	199	147	110	76	38	27
23	10	9	5	6	27	77	109	185	162	164	165	**209**	170	227	294	364	**402**	274	153	137	110	84	39	24
13	11	5	10	14	34	88	123	197	124	169	**212**	261	199	266	312	**342**	321	259	152	135	109	51	32	18

AM Peak 1145 - 1245 (835), AM PHF=0.97 PM Peak 1645 - 1745 (1486), PM PHF=0.92

* Thursday, February 21, 2013=14041, 15 minute drops

0000	0100	0200	0300	0400	0500	0600	0700	0800	0900	1000	1100	1200	1300	1400	1500	1600	1700	1800	1900	2000	2100	2200	2300	
97	**49**	**39**	**33**	**38**	**93**	**274**	**543**	**750**	**620**	**648**	**714**	**870**	**821**	**967**	**1266**	**1285**	**1441**	**1163**	**785**	**570**	**468**	**326**	**187**	
28	9	18	11	7	14	38	119	154	161	162	168	**198**	194	217	283	318	**357**	329	233	155	120	92	56	32
27	20	6	4	9	18	47	106	180	170	163	183	**237**	213	246	322	296	**363**	299	212	145	117	93	44	25
24	12	12	12	9	25	81	146	205	131	163	166	**199**	205	238	354	352	**379**	296	152	139	119	84	49	21
18	8	3	6	13	36	109	172	212	159	161	**198**	237	210	267	307	320	**343**	240	189	132	112	58	39	14

AM Peak 1145 - 1245 (831), AM PHF=0.88 PM Peak 1700 - 1800 (1441), PM PHF=0.95

* Friday, February 22, 2013=14873, 15 minute drops

0000	0100	0200	0300	0400	0500	0600	0700	0800	0900	1000	1100	1200	1300	1400	1500	1600	1700	1800	1900	2000	2100	2200	2300	
91	**50**	**50**	**24**	**29**	**106**	**263**	**530**	**725**	**667**	**697**	**873**	**865**	**939**	**1088**	**1413**	**1387**	**1492**	**1059**	**760**	**561**	**557**	**385**	**268**	
32	18	18	9	4	12	42	90	144	157	173	223	**198**	228	251	282	346	**335**	282	215	137	167	87	87	45
25	6	8	4	8	21	56	120	167	158	174	199	**237**	231	274	375	357	**438**	282	202	169	143	108	68	44
21	14	12	3	6	34	64	141	212	171	180	210	**219**	220	265	401	333	**377**	254	199	128	123	101	51	44
14	12	12	8	12	39	103	180	203	182	171	**241**	211	261	298	355	**352**	342	241	144	127	124	90	63	41

AM Peak 1145 - 1245 (895), AM PHF=0.93 PM Peak 1645 - 1745 (1502), PM PHF=0.86

* Saturday, February 23, 2013=13190, 15 minute drops

0000	0100	0200	0300	0400	0500	0600	0700	0800	0900	1000	1100	1200	1300	1400	1500	1600	1700	1800	1900	2000	2100	2200	2300	
174	**119**	**100**	**49**	**40**	**74**	**143**	**288**	**539**	**673**	**843**	**911**	**1002**	**1056**	**1015**	**1033**	**1010**	**1034**	**783**	**600**	**547**	**473**	**411**	**276**	
45	35	36	16	8	11	27	40	99	154	183	200	**235**	288	246	279	250	252	236	167	151	109	131	89	-
44	30	30	17	7	13	27	56	139	175	217	223	**270**	264	236	261	258	285	193	137	157	125	107	61	-
44	31	15	10	16	20	41	71	128	161	215	239	**255**	248	241	238	244	268	187	136	129	134	90	74	-
41	24	19	6	9	31	49	121	174	184	228	**250**	243	257	293	256	258	229	167	161	111	106	85	52	-

AM Peak 1145 - 1245 (1009), AM PHF=0.93

MetroCount Traffic Executive
Event Counts

2043 -- English (ENU)

Datasets:

Site:	**02.CLAIREMONT DR (I-5 NB RAMPS - DENVER ST) WESTBOUND**
Input A:	2 - East bound. - Lane= 0, Excluded from totals.
Input B:	4 - West bound. - Lane= 0, Added to totals. (/2.000)
Survey Duration:	21:36 Monday, February 18, 2013 => 13:09 Sunday, February 24, 2013
File:	0090224Feb2013.EC0 (Plus)
Data type:	Axle sensors - Separate (Count)

Profile:

Filter time: **0:00 Tuesday, February 19, 2013 => 0:00 Sunday, February 24, 2013**

* Tuesday, February 19, 2013=13777, 15 minute drops

0000	0100	0200	0300	0400	0500	0600	0700	0800	0900	1000	1100	1200	1300	1400	1500	1600	1700	1800	1900	2000	2100	2200	2300	
37	**22**	**24**	**28**	**94**	**297**	**812**	**1528**	**1352**	**1029**	**732**	**797**	**781**	**718**	**759**	**940**	**970**	**896**	**719**	**411**	**306**	**286**	**167**	**76**	
16	6	10	5	8	33	118	331	**342**	298	179	191	216	187	185	214	**255**	244	189	128	84	88	52	23	17
7	7	5	5	17	62	177	**387**	325	285	179	193	184	159	190	194	**242**	220	211	107	67	76	51	24	9
7	2	5	6	23	99	238	**411**	365	244	202	205	190	203	197	**245**	243	235	172	86	77	68	34	18	13
7	7	6	12	46	103	280	**399**	320	204	173	209	191	170	188	**288**	230	198	148	90	78	55	30	11	3

AM Peak 0715 - 0815 (1539), AM PHF=0.94 PM Peak 1530 - 1630 (1029), PM PHF=0.89

* Wednesday, February 20, 2013=14122, 15 minute drops

0000	0100	0200	0300	0400	0500	0600	0700	0800	0900	1000	1100	1200	1300	1400	1500	1600	1700	1800	1900	2000	2100	2200	2300	
42	**23**	**24**	**33**	**92**	**313**	**777**	**1410**	**1250**	**1012**	**770**	**780**	**789**	**888**	**882**	**993**	**912**	**970**	**752**	**489**	**369**	**266**	**199**	**93**	
17	6	4	8	13	39	106	**331**	307	298	198	185	190	253	207	198	**264**	278	196	117	97	96	62	29	25
9	6	6	4	10	61	170	**315**	317	254	190	191	203	210	230	**217**	212	224	202	118	97	70	50	33	10
13	6	7	11	27	102	231	**384**	301	218	186	222	201	218	220	**256**	215	237	192	135	86	51	49	12	9
3	5	7	10	42	112	271	**381**	325	243	196	183	195	208	226	**323**	221	232	162	120	89	50	38	19	5

AM Peak 0700 - 0800 (1410), AM PHF=0.92 PM Peak 1515 - 1615 (1059), PM PHF=0.82

* Thursday, February 21, 2013=14684, 15 minute drops

0000	0100	0200	0300	0400	0500	0600	0700	0800	0900	1000	1100	1200	1300	1400	1500	1600	1700	1800	1900	2000	2100	2200	2300	
49	**25**	**25**	**35**	**91**	**297**	**776**	**1478**	**1430**	**1071**	**789**	**819**	**823**	**874**	**911**	**974**	**1005**	**943**	**786**	**494**	**363**	**341**	**190**	**103**	
25	7	5	6	13	39	122	332	**366**	311	215	220	189	222	200	208	**301**	246	220	149	100	98	61	23	20
10	10	8	5	11	57	162	**377**	341	243	200	188	210	219	245	223	**258**	263	207	131	92	107	50	27	14
9	4	2	16	24	95	229	**351**	331	282	197	223	222	221	226	**246**	241	208	187	117	106	64	44	32	13
5	4	10	8	43	106	263	**419**	393	236	179	190	202	212	240	**297**	206	227	172	98	66	73	35	21	13

AM Peak 0715 - 0815 (1511), AM PHF=0.90 PM Peak 1530 - 1630 (1101), PM PHF=0.92

* Friday, February 22, 2013=15953, 15 minute drops

0000	0100	0200	0300	0400	0500	0600	0700	0800	0900	1000	1100	1200	1300	1400	1500	1600	1700	1800	1900	2000	2100	2200	2300	
60	**34**	**28**	**41**	**90**	**328**	**722**	**1459**	**1366**	**1109**	**878**	**936**	**958**	**878**	**942**	**1098**	**1145**	**1157**	**865**	**576**	**483**	**343**	**289**	**172**	
20	11	4	10	13	34	126	**331**	331	307	224	228	237	215	225	280	**325**	257	263	180	133	94	68	44	30
14	4	7	12	11	65	146	**346**	337	309	222	239	231	220	240	250	**277**	310	217	150	129	88	75	53	25
13	8	7	10	24	108	205	**396**	335	256	207	251	238	239	224	233	**292**	306	194	127	113	79	77	37	19
13	11	10	9	42	121	245	**386**	364	238	225	220	252	204	254	**336**	252	284	191	119	109	82	69	38	22

AM Peak 0700 - 0800 (1459), AM PHF=0.92 PM Peak 1545 - 1645 (1229), PM PHF=0.91

* Saturday, February 23, 2013=13651, 15 minute drops

0000	0100	0200	0300	0400	0500	0600	0700	0800	0900	1000	1100	1200	1300	1400	1500	1600	1700	1800	1900	2000	2100	2200	2300	
96	**63**	**58**	**33**	**67**	**147**	**317**	**535**	**871**	**1059**	**1010**	**1035**	**1078**	**1009**	**982**	**920**	**992**	**827**	**779**	**520**	**446**	**363**	**280**	**168**	
30	18	25	15	12	20	45	94	178	230	**270**	255	253	263	244	252	242	225	221	161	126	91	87	43	-
25	9	9	5	10	24	79	128	209	**272**	234	265	286	230	265	231	256	218	200	140	108	96	72	44	-
19	18	12	6	23	49	95	136	244	**266**	259	247	276	250	243	210	275	200	166	99	109	101	54	35	-
22	18	12	7	22	54	98	178	242	**291**	248	269	263	267	231	228	220	184	194	120	104	75	67	46	-

AM Peak 0915 - 1015 (1098), AM PHF=0.94

MetroCount Traffic Executive
Vehicle Counts

2046 -- English (ENU)

Datasets:

Site:	**03.INGULF ST (MORENA BLVD - DENVER ST) EASTBOUND**
Direction:	8 - East bound A>B, West bound B>A. **Lane:** 0
Survey Duration:	21:25 Monday, February 18, 2013 => 13:06 Sunday, February 24, 2013
File:	0090324Feb2013.EC0 (Base)
Data type:	Axle sensors - Paired (Class/Speed/Count)

Profile:

Filter time:	**0:00 Tuesday, February 19, 2013 => 0:00 Sunday, February 24, 2013**
Included classes:	1, 2, 3, 4, 5, 6, 7, 8, 9, 10, 11, 12, 13
Direction:	East (bound)

* Tuesday, February 19, 2013 - Total=2342, 15 minute drops

0000	0100	0200	0300	0400	0500	0600	0700	0800	0900	1000	1100	1200	1300	1400	1500	1600	1700	1800	1900	2000	2100	2200	2300	
6	**5**	**3**	**4**	**4**	**14**	**73**	**119**	**165**	**139**	**136**	**163**	**174**	**157**	**144**	**210**	**191**	**201**	**131**	**107**	**85**	**56**	**37**	**18**	
3	2	0	0	2	0	9	23	42	35	39	42	**53**	42	46	58	43	**54**	37	23	21	13	7	2	5
0	1	2	1	0	5	15	28	44	37	33	**45**	42	40	29	48	43	**63**	28	31	22	11	16	5	0
2	0	1	0	1	4	21	32	41	35	33	**42**	45	33	29	55	**53**	43	32	32	12	21	7	2	1
1	2	0	3	1	5	28	36	38	32	31	**34**	34	42	40	49	**52**	41	34	21	30	11	7	9	0

AM Peak 1115 - 1215 (174), AM PHF=0.82 PM Peak 1630 - 1730 (222), PM PHF=0.88

* Wednesday, February 20, 2013 - Total=2461, 15 minute drops

0000	0100	0200	0300	0400	0500	0600	0700	0800	0900	1000	1100	1200	1300	1400	1500	1600	1700	1800	1900	2000	2100	2200	2300	
6	**5**	**6**	**1**	**4**	**14**	**68**	**158**	**170**	**127**	**134**	**156**	**177**	**161**	**154**	**222**	**179**	**214**	**164**	**117**	**99**	**62**	**37**	**26**	
5	2	2	0	0	2	13	28	**39**	31	28	31	38	53	38	**51**	48	51	46	31	31	19	10	7	1
0	0	2	0	1	3	10	41	**46**	31	36	45	36	45	46	**55**	43	70	31	33	31	20	12	12	2
1	0	1	0	1	4	22	**46**	41	31	29	36	47	28	35	**56**	43	54	44	25	24	10	12	3	2
0	3	1	1	2	5	23	**43**	44	34	41	44	56	35	35	**60**	45	39	43	28	13	13	3	4	1

AM Peak 0730 - 0830 (174), AM PHF=0.95 PM Peak 1500 - 1600 (222), PM PHF=0.93

* Thursday, February 21, 2013 - Total=2666, 15 minute drops

0000	0100	0200	0300	0400	0500	0600	0700	0800	0900	1000	1100	1200	1300	1400	1500	1600	1700	1800	1900	2000	2100	2200	2300	
6	**4**	**6**	**4**	**4**	**17**	**78**	**140**	**160**	**132**	**140**	**157**	**188**	**185**	**190**	**210**	**205**	**269**	**182**	**131**	**103**	**83**	**56**	**16**	
1	2	1	2	2	2	16	24	38	44	30	38	**48**	38	52	48	46	**79**	40	41	23	20	17	4	6
2	0	1	1	0	4	14	37	43	35	29	27	**37**	57	41	47	46	**78**	48	25	33	24	20	4	3
2	0	1	1	0	6	20	47	45	28	40	**53**	50	40	47	53	52	**60**	51	40	23	30	7	5	3
1	2	3	0	2	5	28	32	34	25	41	**39**	53	50	50	62	**61**	52	43	25	24	9	12	3	1

AM Peak 1130 - 1230 (177), AM PHF=0.83 PM Peak 1645 - 1745 (278), PM PHF=0.88

* Friday, February 22, 2013 - Total=2902, 15 minute drops

0000	0100	0200	0300	0400	0500	0600	0700	0800	0900	1000	1100	1200	1300	1400	1500	1600	1700	1800	1900	2000	2100	2200	2300	
13	**7**	**8**	**9**	**4**	**15**	**67**	**147**	**168**	**160**	**170**	**177**	**201**	**192**	**185**	**221**	**254**	**225**	**185**	**152**	**136**	**97**	**74**	**35**	
6	2	2	5	2	2	15	26	42	54	41	47	**51**	55	40	51	**66**	56	44	44	42	29	31	11	8
3	2	1	3	1	3	12	37	46	46	41	42	**51**	56	54	53	**61**	51	56	38	39	21	16	11	6
3	1	2	1	0	3	16	44	44	29	47	37	**44**	46	41	63	**60**	61	43	34	28	24	13	7	3
1	2	3	0	1	7	24	40	36	31	41	**51**	55	35	50	54	**67**	57	42	36	27	23	14	6	2

AM Peak 1145 - 1245 (197), AM PHF=0.97 PM Peak 1600 - 1700 (254), PM PHF=0.95

* Saturday, February 23, 2013 - Total=2576, 15 minute drops

0000	0100	0200	0300	0400	0500	0600	0700	0800	0900	1000	1100	1200	1300	1400	1500	1600	1700	1800	1900	2000	2100	2200	2300	
19	**16**	**12**	**6**	**7**	**3**	**24**	**62**	**103**	**158**	**198**	**196**	**237**	**204**	**227**	**222**	**188**	**173**	**163**	**116**	**88**	**74**	**47**	**33**	
8	2	4	4	1	1	2	6	15	36	54	49	**70**	50	53	77	60	49	49	39	39	14	10	11	-
6	3	5	0	1	0	5	10	22	38	47	40	**48**	47	58	43	50	40	37	23	12	19	16	10	-
3	5	1	1	2	1	6	20	28	41	40	43	**65**	49	52	45	48	43	28	28	21	23	12	6	-
2	6	2	1	3	1	11	26	38	43	57	**64**	54	58	64	57	30	41	49	26	16	18	9	6	-

AM Peak 1145 - 1245 (247), AM PHF=0.88

MetroCount Traffic Executive
Vehicle Counts

2047 -- English (ENU)

Datasets:

Site: **03.INGULF ST (MORENA BLVD - DENVER ST) WESTBOUND**
Direction: 8 - East bound A>B, West bound B>A. **Lane:** 0
Survey Duration: 21:25 Monday, February 18, 2013 => 13:06 Sunday, February 24, 2013
File: 0090324Feb2013.EC0 (Base)
Data type: Axle sensors - Paired (Class/Speed/Count)

Profile:

Filter time: **0:00 Tuesday, February 19, 2013 => 0:00 Sunday, February 24, 2013**
Included classes: 1, 2, 3, 4, 5, 6, 7, 8, 9, 10, 11, 12, 13
Direction: West (bound)

* Tuesday, February 19, 2013 - Total=1879, 15 minute drops

0000	0100	0200	0300	0400	0500	0600	0700	0800	0900	1000	1100	1200	1300	1400	1500	1600	1700	1800	1900	2000	2100	2200	2300	
6	**4**	**0**	**2**	**2**	**13**	**32**	**96**	**142**	**113**	**116**	**139**	**132**	**134**	**125**	**154**	**165**	**168**	**142**	**72**	**53**	**35**	**25**	**9**	
0	2	0	0	1	1	9	20	27	33	25	25	**39**	22	28	32	**41**	50	42	25	18	6	10	1	2
3	2	0	2	0	5	7	22	39	36	25	**45**	29	35	37	35	**46**	47	47	19	14	15	2	2	2
3	0	0	0	0	4	5	24	37	21	39	**31**	32	43	37	39	**41**	42	25	13	12	5	10	4	2
0	0	0	0	1	3	11	30	39	23	27	**38**	32	34	23	**48**	37	29	28	15	9	9	3	2	0

AM Peak 1115 - 1215 (153), AM PHF=0.85 PM Peak 1545 - 1645 (176), PM PHF=0.92

* Wednesday, February 20, 2013 - Total=2002, 15 minute drops

0000	0100	0200	0300	0400	0500	0600	0700	0800	0900	1000	1100	1200	1300	1400	1500	1600	1700	1800	1900	2000	2100	2200	2300	
6	**4**	**3**	**2**	**4**	**9**	**39**	**97**	**109**	**112**	**114**	**113**	**157**	**144**	**159**	**166**	**161**	**218**	**164**	**86**	**66**	**36**	**22**	**11**	
2	3	2	0	0	1	6	16	24	35	24	30	**43**	33	44	38	39	**43**	42	33	15	9	6	4	1
2	0	0	0	1	2	7	29	23	32	30	23	**34**	38	37	43	38	**70**	41	17	18	12	0	3	3
2	1	0	1	2	3	8	18	29	21	34	25	**36**	32	37	35	40	**52**	36	22	17	8	9	1	0
0	0	1	1	1	3	18	34	33	24	26	**35**	44	41	41	50	44	**53**	45	14	16	7	7	3	0

AM Peak 1145 - 1245 (148), AM PHF=0.86 PM Peak 1700 - 1800 (218), PM PHF=0.78

* Thursday, February 21, 2013 - Total=2115, 15 minute drops

0000	0100	0200	0300	0400	0500	0600	0700	0800	0900	1000	1100	1200	1300	1400	1500	1600	1700	1800	1900	2000	2100	2200	2300	
4	**1**	**2**	**2**	**4**	**10**	**37**	**99**	**141**	**118**	**115**	**145**	**146**	**137**	**151**	**157**	**193**	**224**	**177**	**96**	**58**	**57**	**24**	**17**	
1	0	1	1	0	3	7	22	31	28	24	**40**	34	32	33	32	50	**59**	56	29	19	11	8	4	2
3	1	1	1	0	3	6	25	34	30	34	**40**	36	37	48	36	49	**58**	39	20	11	17	5	8	2
0	0	0	0	1	0	13	22	31	25	26	**33**	38	31	32	47	50	**54**	45	25	17	16	5	3	2
0	0	0	0	3	4	11	30	45	35	31	**32**	38	37	38	42	44	**53**	37	22	11	13	6	2	1

AM Peak 1100 - 1200 (145), AM PHF=0.91 PM Peak 1700 - 1800 (224), PM PHF=0.95

* Friday, February 22, 2013 - Total=2283, 15 minute drops

0000	0100	0200	0300	0400	0500	0600	0700	0800	0900	1000	1100	1200	1300	1400	1500	1600	1700	1800	1900	2000	2100	2200	2300	
7	**2**	**6**	**3**	**2**	**15**	**36**	**99**	**136**	**126**	**122**	**162**	**152**	**120**	**160**	**195**	**240**	**219**	**168**	**106**	**91**	**56**	**40**	**20**	
2	1	1	1	1	2	2	18	23	40	22	**30**	30	21	46	35	**53**	50	46	31	23	18	9	8	5
2	0	2	1	0	3	9	29	33	33	27	**52**	47	28	28	42	**63**	56	40	28	22	14	12	5	8
2	0	0	0	0	5	7	24	35	27	47	**34**	38	41	41	62	**60**	65	40	31	25	13	14	3	2
1	1	3	1	1	5	18	28	45	26	26	**46**	37	30	45	56	**64**	48	42	16	21	11	5	4	1

AM Peak 1100 - 1200 (162), AM PHF=0.78 PM Peak 1600 - 1700 (240), PM PHF=0.94

* Saturday, February 23, 2013 - Total=2076, 15 minute drops

0000	0100	0200	0300	0400	0500	0600	0700	0800	0900	1000	1100	1200	1300	1400	1500	1600	1700	1800	1900	2000	2100	2200	2300	
16	**12**	**6**	**5**	**1**	**6**	**17**	**51**	**108**	**163**	**190**	**163**	**189**	**190**	**156**	**156**	**139**	**156**	**120**	**92**	**50**	**48**	**23**	**19**	
5	2	4	2	0	2	3	7	19	34	**57**	34	61	34	40	41	33	33	46	27	16	14	5	8	-
8	4	1	2	0	0	3	10	34	40	**43**	39	42	47	46	49	33	40	28	23	14	12	5	2	-
2	4	0	1	1	3	5	15	22	42	**46**	55	47	44	41	32	35	38	19	22	13	19	7	6	-
1	2	1	0	0	1	6	19	33	**47**	44	35	39	65	29	34	38	45	27	20	7	3	6	3	-

AM Peak 0945 - 1045 (193), AM PHF=0.85

MetroCount Traffic Executive
Vehicle Counts

2011 -- English (ENU)

Datasets:

Site: **04.DENVER ST (CLAIREMONT DR - INGULF ST) NORTHBOUND**
Direction: 5 - South bound A>B, North bound B>A. **Lane:** 0
Survey Duration: 16:18 Monday, February 11, 2013 => 16:21 Saturday, February 16, 2013
File: 0090418Feb2013.EC0 (Plus)
Data type: Axle sensors - Paired (Class/Speed/Count)

Profile:

Filter time: **0:00 Tuesday, February 12, 2013 => 16:21 Saturday, February 16, 2013**
Included classes: 1, 2, 3, 4, 5, 6, 7, 8, 9, 10, 11, 12, 13
Direction: North (bound)

* Tuesday, February 12, 2013 - Total=4718, 15 minute drops

0000	0100	0200	0300	0400	0500	0600	0700	0800	0900	1000	1100	1200	1300	1400	1500	1600	1700	1800	1900	2000	2100	2200	2300	
16	**8**	**6**	**4**	**10**	**46**	**172**	**378**	**397**	**305**	**257**	**286**	**296**	**290**	**298**	**409**	**391**	**380**	**279**	**174**	**120**	**110**	**54**	**32**	
5	0	2	1	0	7	28	82	**93**	92	52	63	78	82	78	75	**119**	107	81	52	32	35	29	7	7
4	2	0	0	3	10	43	99	**103**	82	63	67	79	66	56	**87**	84	104	63	45	30	32	10	6	4
3	3	4	2	2	8	40	94	**108**	67	80	71	62	65	87	**116**	104	93	80	35	26	27	11	12	4
4	3	0	1	5	21	61	**103**	93	64	62	85	77	77	77	**131**	84	76	55	42	32	16	4	7	5

AM Peak 0745 - 0845 (407), AM PHF=0.94 PM Peak 1515 - 1615 (453), PM PHF=0.86

* Wednesday, February 13, 2013 - Total=5096, 15 minute drops

0000	0100	0200	0300	0400	0500	0600	0700	0800	0900	1000	1100	1200	1300	1400	1500	1600	1700	1800	1900	2000	2100	2200	2300	
20	**10**	**8**	**3**	**20**	**45**	**183**	**374**	**434**	**357**	**243**	**332**	**317**	**329**	**370**	**422**	**333**	**384**	**312**	**216**	**174**	**104**	**67**	**39**	
7	6	1	1	5	7	22	79	93	**122**	60	73	99	74	93	**98**	94	93	80	59	64	26	19	17	11
4	1	5	0	4	14	38	93	**103**	86	49	82	65	84	88	**80**	70	88	77	52	37	26	21	7	4
4	1	2	1	6	8	56	95	**127**	76	67	79	86	92	79	**116**	78	116	65	55	42	26	16	9	6
5	2	0	1	5	16	67	107	**111**	73	67	98	67	79	110	**128**	91	87	90	50	31	26	11	6	6

AM Peak 0815 - 0915 (463), AM PHF=0.91 PM Peak 1500 - 1600 (422), PM PHF=0.82

* Thursday, February 14, 2013 - Total=5240, 15 minute drops

0000	0100	0200	0300	0400	0500	0600	0700	0800	0900	1000	1100	1200	1300	1400	1500	1600	1700	1800	1900	2000	2100	2200	2300	
27	**16**	**11**	**5**	**14**	**37**	**162**	**347**	**429**	**339**	**230**	**311**	**356**	**417**	**378**	**431**	**405**	**430**	**308**	**192**	**130**	**123**	**97**	**45**	
11	4	3	0	3	7	25	75	103	**122**	45	76	70	143	91	101	87	**103**	92	43	29	33	26	14	7
4	4	5	2	3	13	32	91	**94**	74	60	80	108	114	113	97	98	**120**	88	61	36	31	27	11	11
6	2	3	1	4	8	56	85	**111**	79	64	76	85	72	81	116	108	**118**	67	54	29	35	24	11	4
6	6	0	2	4	9	49	96	**121**	64	61	79	93	88	93	117	**112**	89	61	34	36	24	20	9	5

AM Peak 0815 - 0915 (448), AM PHF=0.92 PM Peak 1645 - 1745 (453), PM PHF=0.94

* Friday, February 15, 2013 - Total=4728, 15 minute drops

0000	0100	0200	0300	0400	0500	0600	0700	0800	0900	1000	1100	1200	1300	1400	1500	1600	1700	1800	1900	2000	2100	2200	2300	
27	**10**	**6**	**8**	**16**	**44**	**143**	**274**	**290**	**269**	**298**	**313**	**316**	**347**	**341**	**314**	**350**	**360**	**302**	**212**	**197**	**123**	**107**	**61**	
7	2	3	2	7	5	20	49	71	68	71	73	**77**	85	89	78	86	**92**	86	54	66	35	24	14	10
11	4	1	2	1	8	30	59	72	77	79	69	**85**	71	78	77	83	**88**	88	62	51	39	29	19	10
4	2	1	1	4	11	47	66	75	60	69	**83**	68	93	87	94	80	**98**	71	52	38	27	34	14	7
5	2	1	3	4	20	46	100	72	64	79	**88**	86	98	87	65	**101**	82	57	44	42	22	20	14	12

AM Peak 1130 - 1230 (333), AM PHF=0.95 PM Peak 1645 - 1745 (379), PM PHF=0.94

* Saturday, February 16, 2013 - Total=4515, 15 minute drops

0000	0100	0200	0300	0400	0500	0600	0700	0800	0900	1000	1100	1200	1300	1400	1500	1600	1700	1800	1900	2000	2100	2200	2300	
39	**14**	**25**	**11**	**9**	**17**	**56**	**109**	**197**	**269**	**342**	**388**	**395**	**392**	**377**	**310**	**275**	**343**	**309**	**217**	**170**	**118**	**82**	**51**	
10	5	9	4	0	6	6	26	40	64	84	79	**92**	102	92	100	70	88	78	55	54	33	18	10	-
10	2	6	1	3	2	12	20	50	57	77	**104**	104	102	96	67	68	73	81	58	38	29	23	11	-
7	2	7	3	3	3	15	30	48	67	91	**115**	100	96	99	68	63	90	83	63	41	31	19	16	-
12	5	3	3	3	6	23	33	59	81	90	**90**	99	92	90	75	74	92	67	41	37	25	22	14	-

AM Peak 1115 - 1215 (401), AM PHF=0.87

MetroCount Traffic Executive
Vehicle Counts

2012 -- English (ENU)

Datasets:

Site: **04.DENVER ST (CLAIREMONT DR - INGULF ST) SOUTHBOUND**
Direction: 5 - South bound A>B, North bound B>A. **Lane:** 0
Survey Duration: 16:18 Monday, February 11, 2013 => 16:21 Saturday, February 16, 2013
File: 0090418Feb2013.EC0 (Plus)
Data type: Axle sensors - Paired (Class/Speed/Count)

Profile:

Filter time: **0:00 Tuesday, February 12, 2013 => 16:21 Saturday, February 16, 2013**
Included classes: 1, 2, 3, 4, 5, 6, 7, 8, 9, 10, 11, 12, 13
Direction: South (bound)

* Tuesday, February 12, 2013 - Total=4371, 15 minute drops

0000	0100	0200	0300	0400	0500	0600	0700	0800	0900	1000	1100	1200	1300	1400	1500	1600	1700	1800	1900	2000	2100	2200	2300	
16	**8**	**8**	**2**	**5**	**35**	**86**	**232**	**271**	**247**	**219**	**274**	**276**	**281**	**304**	**446**	**427**	**417**	**281**	**212**	**138**	**90**	**63**	**33**	
3	2	4	1	1	6	16	34	62	70	55	64	**53**	65	67	**101**	87	101	83	52	46	21	19	7	4
6	1	1	1	0	6	14	67	53	59	60	65	**78**	65	72	**116**	116	105	66	55	34	20	17	10	4
5	3	3	0	2	9	17	60	62	53	59	61	**72**	68	83	**117**	114	112	71	62	39	25	15	8	4
2	2	0	0	2	14	39	71	94	65	45	**84**	73	83	82	**112**	110	99	61	43	19	24	12	8	3

AM Peak 1145 - 1245 (287), AM PHF=0.85 PM Peak 1500 - 1600 (446), PM PHF=0.95

* Wednesday, February 13, 2013 - Total=4665, 15 minute drops

0000	0100	0200	0300	0400	0500	0600	0700	0800	0900	1000	1100	1200	1300	1400	1500	1600	1700	1800	1900	2000	2100	2200	2300	
15	**10**	**6**	**5**	**7**	**29**	**93**	**227**	**320**	**260**	**220**	**316**	**293**	**287**	**325**	**436**	**375**	**460**	**378**	**225**	**171**	**107**	**72**	**28**	
4	6	0	1	1	2	13	42	68	**74**	53	74	64	78	74	94	91	**132**	93	55	47	29	18	12	5
4	2	2	0	5	8	10	55	**63**	53	47	63	63	61	90	110	99	**105**	92	65	40	29	24	6	5
4	1	2	3	1	5	24	66	**83**	57	55	85	77	73	76	127	90	**118**	95	50	41	20	11	5	2
3	1	2	1	0	14	46	64	**106**	76	65	94	89	75	85	105	95	**105**	98	55	43	29	19	5	2

AM Peak 0815 - 0915 (326), AM PHF=0.77 PM Peak 1700 - 1800 (460), PM PHF=0.87

* Thursday, February 14, 2013 - Total=4824, 15 minute drops

0000	0100	0200	0300	0400	0500	0600	0700	0800	0900	1000	1100	1200	1300	1400	1500	1600	1700	1800	1900	2000	2100	2200	2300	
14	**19**	**7**	**6**	**6**	**24**	**81**	**240**	**302**	**246**	**222**	**322**	**378**	**351**	**343**	**418**	**440**	**451**	**361**	**224**	**131**	**120**	**81**	**37**	
5	3	1	0	2	3	9	48	68	53	50	68	**90**	95	75	93	104	**113**	108	78	37	29	12	10	9
5	6	3	1	1	6	14	54	66	60	58	93	**79**	98	90	93	101	**112**	87	58	31	40	21	16	7
2	7	3	3	0	7	21	60	70	68	58	73	**94**	76	93	101	112	**129**	88	49	28	30	25	6	1
2	3	0	2	3	8	37	78	98	65	56	**88**	115	82	85	131	**123**	97	78	39	35	21	23	5	5

AM Peak 1145 - 1245 (351), AM PHF=0.93 PM Peak 1645 - 1745 (477), PM PHF=0.92

* Friday, February 15, 2013 - Total=4350, 15 minute drops

0000	0100	0200	0300	0400	0500	0600	0700	0800	0900	1000	1100	1200	1300	1400	1500	1600	1700	1800	1900	2000	2100	2200	2300	
22	**15**	**6**	**9**	**6**	**22**	**70**	**176**	**184**	**234**	**241**	**296**	**316**	**319**	**311**	**372**	**402**	**421**	**313**	**198**	**144**	**122**	**98**	**53**	
9	3	2	1	1	1	6	43	40	56	41	63	**70**	71	80	88	90	**104**	89	55	45	32	23	17	11
7	5	1	3	1	7	14	38	43	58	69	67	**86**	72	65	91	107	**113**	89	41	47	33	34	13	8
1	3	0	2	2	5	19	35	42	50	62	**79**	72	87	77	87	103	**111**	67	60	25	28	22	11	7
5	4	3	3	2	9	31	60	59	70	69	**87**	88	89	89	106	**102**	93	68	42	27	29	19	12	5

AM Peak 1130 - 1230 (322), AM PHF=0.93 PM Peak 1645 - 1745 (430), PM PHF=0.95

* Saturday, February 16, 2013 - Total=4350 , 15 minute drops

0000	0100	0200	0300	0400	0500	0600	0700	0800	0900	1000	1100	1200	1300	1400	1500	1600	1700	1800	1900	2000	2100	2200	2300	
31	**17**	**23**	**12**	**7**	**9**	**24**	**86**	**150**	**229**	**373**	**409**	**414**	**431**	**407**	**291**	**340**	**291**	**291**	**187**	**115**	**82**	**79**	**52**	
11	3	7	5	0	2	3	13	39	49	82	90	**96**	100	99	81	78	85	71	45	37	18	17	18	-
8	1	9	2	2	3	4	16	33	48	92	**104**	91	114	118	86	88	72	78	43	31	25	23	16	-
7	5	4	2	1	3	5	16	42	48	109	**110**	104	108	95	64	83	65	69	48	25	19	21	10	-
5	8	3	3	4	1	12	41	36	84	90	**105**	123	109	95	60	91	69	73	51	22	20	18	8	-

AM Peak 1115 - 1215 (415), AM PHF=0.94

MetroCount Traffic Executive
Event Counts

2051 -- English (ENU)

Datasets:

Site:	**05.MORENA BLVD (NORTH OF GESNER ST) NORTHBOUND**
Input A:	1 - North bound. - Lane= 0, Added to totals. (/2.000)
Input B:	3 - South bound. - Lane= 0, Excluded from totals.
Survey Duration:	17:33 Monday, April 08, 2013 => 11:38 Monday, April 15, 2013
File:	090515Apr2013.EC0 (Base)
Data type:	Axle sensors - Separate (Count)

Profile:

Filter time: **0:00 Tuesday, April 09, 2013 => 0:00 Sunday, April 14, 2013**

* Tuesday, April 09, 2013=6099, 15 minute drops

0000	0100	0200	0300	0400	0500	0600	0700	0800	0900	1000	1100	1200	1300	1400	1500	1600	1700	1800	1900	2000	2100	2200	2300	
15	**10**	**15**	**8**	**10**	**40**	**119**	**487**	**609**	**389**	**294**	**304**	**391**	**383**	**364**	**500**	**458**	**460**	**391**	**303**	**224**	**188**	**100**	**42**	
4	2	5	1	1	5	13	100	**183**	106	92	61	99	66	86	106	**147**	127	88	85	79	45	29	17	1
2	3	4	0	1	4	20	89	**153**	99	64	60	106	105	81	**122**	103	107	96	51	42	50	38	8	4
5	3	4	3	4	14	27	134	**148**	92	54	82	83	105	90	**141**	99	126	108	83	57	52	16	10	8
4	2	2	4	4	17	59	**164**	126	93	85	102	104	108	108	**132**	110	101	99	85	47	41	17	8	3

AM Peak 0745 - 0845 (647), AM PHF=0.89 PM Peak 1515 - 1615 (541), PM PHF=0.92

* Wednesday, April 10, 2013=6267, 15 minute drops

0000	0100	0200	0300	0400	0500	0600	0700	0800	0900	1000	1100	1200	1300	1400	1500	1600	1700	1800	1900	2000	2100	2200	2300	
15	**16**	**17**	**10**	**18**	**37**	**134**	**443**	**579**	**378**	**323**	**382**	**409**	**425**	**404**	**496**	**459**	**453**	**372**	**370**	**229**	**147**	**98**	**61**	
1	3	7	1	4	3	13	98	**192**	105	91	84	119	103	93	**125**	122	112	110	90	72	41	33	26	9
4	8	3	3	2	4	20	76	**133**	100	76	99	113	94	105	**116**	106	119	86	99	62	34	18	15	13
8	6	6	2	4	11	35	106	**122**	88	69	95	94	103	95	**119**	103	113	81	105	56	41	23	8	5
3	0	2	4	8	19	66	**163**	133	86	87	105	83	125	113	**137**	129	109	95	76	40	32	24	12	5

AM Peak 0745 - 0845 (610), AM PHF=0.80 PM Peak 1500 - 1600 (496), PM PHF=0.91

* Thursday, April 11, 2013=6307, 15 minute drops

0000	0100	0200	0300	0400	0500	0600	0700	0800	0900	1000	1100	1200	1300	1400	1500	1600	1700	1800	1900	2000	2100	2200	2300	
32	**25**	**9**	**9**	**11**	**32**	**140**	**430**	**587**	**355**	**323**	**381**	**451**	**477**	**448**	**454**	**489**	**470**	**381**	**316**	**211**	**146**	**89**	**49**	
9	13	4	3	0	2	12	94	**172**	121	72	85	129	108	113	115	**113**	106	107	83	60	44	18	15	9
13	3	0	2	1	6	16	66	**130**	72	83	87	106	111	113	111	**136**	128	76	100	47	43	26	8	14
5	2	3	3	3	8	36	118	**128**	83	73	105	96	116	118	108	**121**	125	93	67	49	36	21	15	6
5	7	2	1	7	16	76	153	**158**	80	95	105	121	142	105	**120**	119	112	106	68	55	24	25	12	6

AM Peak 0800 - 0900 (587), AM PHF=0.85 PM Peak 1545 - 1645 (490), PM PHF=0.90

* Friday, April 12, 2013=6593, 15 minute drops

0000	0100	0200	0300	0400	0500	0600	0700	0800	0900	1000	1100	1200	1300	1400	1500	1600	1700	1800	1900	2000	2100	2200	2300	
35	**30**	**14**	**7**	**13**	**40**	**133**	**393**	**505**	**352**	**373**	**387**	**455**	**450**	**510**	**556**	**496**	**507**	**391**	**302**	**220**	**185**	**128**	**115**	
9	14	4	1	0	3	15	90	**148**	76	84	82	106	120	129	**133**	127	137	115	76	67	57	46	30	23
14	7	2	4	1	6	24	76	**144**	66	108	92	125	93	106	**132**	124	124	106	79	59	53	32	27	13
6	5	3	0	2	9	28	100	**111**	106	89	103	99	110	122	**148**	120	109	95	82	38	44	22	28	17
6	5	5	2	10	22	67	**128**	103	104	93	111	125	127	**154**	144	125	138	76	65	56	32	28	31	12

AM Peak 0745 - 0845 (530), AM PHF=0.90 PM Peak 1445 - 1545 (566), PM PHF=0.92

* Saturday, April 13, 2013=5131, 15 minute drops

0000	0100	0200	0300	0400	0500	0600	0700	0800	0900	1000	1100	1200	1300	1400	1500	1600	1700	1800	1900	2000	2100	2200	2300	
65	**43**	**23**	**15**	**15**	**17**	**44**	**111**	**217**	**311**	**398**	**407**	**419**	**462**	**433**	**379**	**432**	**378**	**259**	**201**	**167**	**160**	**106**	**75**	
23	8	7	5	1	3	7	24	55	72	95	**110**	115	131	103	99	107	113	65	62	35	52	33	21	-
13	13	6	4	2	4	9	23	38	65	101	**102**	94	94	94	105	96	97	72	52	38	38	26	22	-
17	11	6	4	5	5	13	29	76	84	**93**	91	99	126	118	85	113	91	66	43	58	29	27	13	-
12	11	5	2	7	5	16	36	49	91	**110**	105	111	112	118	91	116	78	57	44	36	41	20	20	-

AM Peak 1030 - 1130 (413), AM PHF=0.94

MetroCount Traffic Executive
Event Counts

2052 -- English (ENU)

Datasets:

Site:	**05.MORENA BLVD (NORTH OF GESNER ST) SOUTHBOUND**
Input A:	1 - North bound. - Lane= 0, Excluded from totals.
Input B:	3 - South bound. - Lane= 0, Added to totals. (/2.000)
Survey Duration:	17:33 Monday, April 08, 2013 => 11:38 Monday, April 15, 2013
File:	090515Apr2013.EC0 (Base)
Data type:	Axle sensors - Separate (Count)

Profile:

Filter time: **0:00 Tuesday, April 09, 2013 => 0:00 Sunday, April 14, 2013**

* Tuesday, April 09, 2013=6130, 15 minute drops

0000	0100	0200	0300	0400	0500	0600	0700	0800	0900	1000	1100	1200	1300	1400	1500	1600	1700	1800	1900	2000	2100	2200	2300	
17	**13**	**1**	**3**	**21**	**62**	**117**	**433**	**390**	**343**	**353**	**373**	**412**	**422**	**399**	**483**	**548**	**640**	**397**	**285**	**205**	**117**	**67**	**35**	
3	5	0	3	1	14	17	79	**83**	91	86	102	101	152	83	75	116	**177**	112	78	55	44	19	14	5
7	5	1	0	1	8	26	**110**	90	78	89	99	100	97	114	130	119	**145**	107	76	52	25	19	10	3
5	2	0	0	6	15	34	**108**	97	103	92	91	106	85	102	134	145	**185**	99	73	53	25	16	5	5
2	1	0	0	13	25	41	**137**	121	72	87	81	106	89	101	145	**169**	134	79	59	45	23	13	6	3

AM Peak 0715 - 0815 (436), AM PHF=0.80 PM Peak 1645 - 1745 (674), PM PHF=0.91

* Wednesday, April 10, 2013=6335, 15 minute drops

0000	0100	0200	0300	0400	0500	0600	0700	0800	0900	1000	1100	1200	1300	1400	1500	1600	1700	1800	1900	2000	2100	2200	2300	
16	**22**	**6**	**2**	**13**	**53**	**139**	**401**	**381**	**367**	**300**	**358**	**463**	**386**	**417**	**531**	**539**	**747**	**456**	**298**	**203**	**118**	**83**	**41**	
5	8	0	0	2	8	27	64	94	99	63	82	**119**	95	90	115	151	**190**	142	91	70	39	27	14	5
3	9	2	0	3	15	33	110	90	82	75	95	**104**	90	104	138	120	**157**	117	82	57	30	20	6	15
5	1	4	1	6	12	37	106	97	69	67	88	**119**	79	129	139	134	**227**	96	66	43	29	16	9	1
3	4	0	1	2	18	43	122	101	118	97	**94**	122	124	94	140	136	**173**	102	59	34	20	20	12	0

AM Peak 1145 - 1245 (435), AM PHF=0.91 PM Peak 1700 - 1800 (747), PM PHF=0.82

* Thursday, April 11, 2013=6588, 15 minute drops

0000	0100	0200	0300	0400	0500	0600	0700	0800	0900	1000	1100	1200	1300	1400	1500	1600	1700	1800	1900	2000	2100	2200	2300	
21	**9**	**5**	**2**	**22**	**47**	**150**	**404**	**386**	**340**	**390**	**422**	**482**	**449**	**499**	**480**	**608**	**704**	**494**	**275**	**209**	**102**	**51**	**43**	
5	1	4	1	3	6	21	79	72	100	113	96	**135**	117	96	109	139	**181**	148	77	56	33	14	11	9
15	1	0	0	2	12	44	94	89	81	111	**119**	103	123	130	101	131	**165**	131	89	56	31	8	10	10
1	6	0	0	9	12	35	96	115	94	88	**122**	125	113	133	130	154	**209**	112	57	48	20	17	10	4
0	1	1	1	9	17	51	136	110	66	79	**86**	119	96	141	141	**185**	150	104	52	50	19	12	12	5

AM Peak 1115 - 1215 (461), AM PHF=0.85 PM Peak 1645 - 1745 (740), PM PHF=0.88

* Friday, April 12, 2013=6915, 15 minute drops

0000	0100	0200	0300	0400	0500	0600	0700	0800	0900	1000	1100	1200	1300	1400	1500	1600	1700	1800	1900	2000	2100	2200	2300	
28	**13**	**11**	**11**	**18**	**51**	**129**	**396**	**421**	**384**	**390**	**439**	**451**	**442**	**483**	**603**	**645**	**653**	**498**	**361**	**203**	**131**	**92**	**68**	
9	2	3	0	1	13	27	75	**107**	116	87	106	110	109	104	122	**187**	193	137	104	56	22	27	17	18
10	3	2	6	2	10	30	86	**91**	91	94	115	124	105	129	**152**	151	154	120	90	65	42	26	23	9
4	4	3	4	6	11	25	102	**121**	86	115	118	109	109	124	**166**	158	153	134	90	47	34	22	10	12
5	4	3	1	9	18	48	**135**	103	91	94	100	109	120	126	**164**	151	154	108	79	35	34	17	18	21

AM Peak 0745 - 0845 (452), AM PHF=0.84 PM Peak 1515 - 1615 (667), PM PHF=0.89

* Saturday, April 13, 2013=5220, 15 minute drops

0000	0100	0200	0300	0400	0500	0600	0700	0800	0900	1000	1100	1200	1300	1400	1500	1600	1700	1800	1900	2000	2100	2200	2300	
60	**46**	**19**	**15**	**12**	**16**	**71**	**130**	**190**	**324**	**437**	**455**	**459**	**451**	**418**	**403**	**406**	**438**	**307**	**193**	**139**	**106**	**75**	**56**	
18	2	10	6	2	4	11	27	34	71	120	109	**135**	130	101	108	100	98	98	54	40	24	28	20	-
9	13	3	2	0	1	22	29	44	80	107	**109**	103	101	112	102	107	118	74	48	43	19	15	17	-
12	17	3	4	3	7	23	35	59	67	99	**116**	106	114	99	91	105	120	65	47	33	39	21	10	-
21	14	3	3	7	4	15	40	53	107	112	**123**	117	106	107	103	94	103	70	44	24	24	11	10	-

AM Peak 1115 - 1215 (481), AM PHF=0.89

MetroCount Traffic Executive
Event Counts

2053 -- English (ENU)

Datasets:

Site:	**06.MORENA BLVD (GESNER ST - INGULF ST) NORTHBOUND**
Input A:	1 - North bound. - Lane= 0, Added to totals. (/2.000)
Input B:	3 - South bound. - Lane= 0, Excluded from totals.
Survey Duration:	17:39 Monday, April 08, 2013 => 11:05 Monday, April 15, 2013
File:	090615Apr2013.EC0 (Regular)
Data type:	Axle sensors - Separate (Count)

Profile:

Filter time: **0:00 Tuesday, April 09, 2013 => 0:00 Sunday, April 14, 2013**

* Tuesday, April 09, 2013=5538, 15 minute drops

0000	0100	0200	0300	0400	0500	0600	0700	0800	0900	1000	1100	1200	1300	1400	1500	1600	1700	1800	1900	2000	2100	2200	2300	
15	**7**	**11**	**8**	**10**	**30**	**113**	**409**	**561**	**337**	**252**	**277**	**369**	**338**	**345**	**456**	**421**	**410**	**364**	**281**	**206**	**189**	**95**	**37**	
3	1	4	1	1	4	13	87	**173**	94	70	61	87	65	79	112	**135**	114	78	72	70	46	30	14	1
4	3	3	0	1	4	18	67	**147**	83	60	56	94	81	73	**97**	90	95	91	51	42	50	31	7	4
3	3	2	4	5	9	27	103	**130**	89	51	69	79	91	86	**122**	97	102	97	80	48	55	14	10	5
5	0	2	3	3	13	55	**153**	112	72	72	91	110	102	108	**126**	100	99	99	79	46	39	20	6	3

AM Peak 0745 - 0845 (603), AM PHF=0.87 PM Peak 1515 - 1615 (479), PM PHF=0.89

* Wednesday, April 10, 2013=5586, 15 minute drops

0000	0100	0200	0300	0400	0500	0600	0700	0800	0900	1000	1100	1200	1300	1400	1500	1600	1700	1800	1900	2000	2100	2200	2300	
13	**11**	**14**	**6**	**12**	**31**	**102**	**371**	**527**	**347**	**286**	**338**	**344**	**391**	**387**	**434**	**421**	**406**	**357**	**304**	**201**	**148**	**83**	**56**	
1	3	5	1	3	4	10	75	**177**	98	83	71	102	94	75	104	**106**	110	104	76	59	40	28	22	8
4	6	2	1	2	4	19	67	**127**	100	64	79	97	91	102	**104**	101	108	94	77	56	35	15	15	9
5	2	5	2	1	10	30	84	**115**	76	63	87	71	95	92	**99**	101	93	80	89	46	41	20	10	9
3	0	2	2	6	13	44	**146**	109	74	77	102	75	112	118	**128**	113	95	80	63	41	32	20	9	3

AM Peak 0745 - 0845 (565), AM PHF=0.80 PM Peak 1515 - 1615 (436), PM PHF=0.85

* Thursday, April 11, 2013=5617, 15 minute drops

0000	0100	0200	0300	0400	0500	0600	0700	0800	0900	1000	1100	1200	1300	1400	1500	1600	1700	1800	1900	2000	2100	2200	2300	
29	**17**	**8**	**8**	**9**	**26**	**126**	**354**	**533**	**321**	**281**	**331**	**374**	**420**	**408**	**411**	**427**	**414**	**337**	**308**	**203**	**142**	**84**	**51**	
8	5	3	1	0	4	11	78	**160**	108	65	68	107	108	93	**123**	107	94	101	93	54	45	20	16	10
9	4	0	3	1	3	19	55	**121**	68	72	80	92	100	**97**	90	113	125	68	87	49	41	27	10	11
9	2	3	3	1	7	36	88	**119**	72	71	96	81	98	**118**	101	112	103	81	60	53	29	15	12	7
3	6	2	1	7	12	60	**133**	133	74	74	88	95	115	**101**	98	95	93	88	68	47	27	22	13	6

AM Peak 0745 - 0845 (533), AM PHF=0.83 PM Peak 1415 - 1515 (439), PM PHF=0.89

* Friday, April 12, 2013=5916, 15 minute drops

0000	0100	0200	0300	0400	0500	0600	0700	0800	0900	1000	1100	1200	1300	1400	1500	1600	1700	1800	1900	2000	2100	2200	2300	
34	**31**	**15**	**7**	**9**	**31**	**122**	**347**	**441**	**301**	**319**	**325**	**431**	**412**	**432**	**504**	**445**	**466**	**343**	**270**	**226**	**186**	**120**	**104**	
10	15	4	1	0	2	14	81	**131**	71	76	72	111	108	93	**118**	113	121	96	65	68	54	44	32	15
11	6	3	4	1	6	24	66	**122**	67	96	75	117	95	96	**130**	110	112	103	68	64	58	28	23	13
7	3	4	0	2	8	28	81	**100**	80	71	88	93	105	104	**128**	101	99	76	77	45	44	27	26	17
6	7	4	2	6	15	56	**119**	89	84	76	91	111	104	**140**	129	121	135	69	61	50	30	21	23	14

AM Peak 0745 - 0845 (471), AM PHF=0.90 PM Peak 1445 - 1545 (516), PM PHF=0.92

* Saturday, April 13, 2013=4676, 15 minute drops

0000	0100	0200	0300	0400	0500	0600	0700	0800	0900	1000	1100	1200	1300	1400	1500	1600	1700	1800	1900	2000	2100	2200	2300	
59	**41**	**27**	**15**	**13**	**13**	**42**	**90**	**188**	**283**	**324**	**361**	**397**	**423**	**406**	**344**	**376**	**353**	**238**	**211**	**160**	**154**	**98**	**65**	
15	7	9	4	1	2	5	17	41	53	84	95	**104**	116	101	91	97	102	54	61	37	50	34	16	-
13	14	6	4	2	4	8	23	37	64	86	91	**90**	88	95	97	81	94	74	63	39	38	22	18	-
17	10	8	4	3	3	16	25	70	81	69	88	**99**	113	106	78	98	86	58	44	50	34	25	13	-
14	10	5	3	7	4	13	26	40	85	86	**88**	104	107	105	79	100	72	52	43	34	33	17	18	-

AM Peak 1145 - 1245 (380), AM PHF=0.91

MetroCount Traffic Executive
Event Counts

2054 -- English (ENU)

Datasets:

Site:	**06.MORENA BLVD (GESNER ST - INGULF ST) SOUTHBOUND**
Input A:	1 - North bound. - Lane= 0, Excluded from totals.
Input B:	3 - South bound. - Lane= 0, Added to totals. (/2.000)
Survey Duration:	17:39 Monday, April 08, 2013 => 11:05 Monday, April 15, 2013
File:	090615Apr2013.EC0 (Regular)
Data type:	Axle sensors - Separate (Count)

Profile:

Filter time: **0:00 Tuesday, April 09, 2013 => 0:00 Sunday, April 14, 2013**

* Tuesday, April 09, 2013=4892, 15 minute drops

0000	0100	0200	0300	0400	0500	0600	0700	0800	0900	1000	1100	1200	1300	1400	1500	1600	1700	1800	1900	2000	2100	2200	2300	
13	**11**	**2**	**3**	**14**	**51**	**93**	**341**	**323**	**275**	**275**	**318**	**330**	**298**	**337**	**372**	**435**	**521**	**350**	**224**	**145**	**92**	**46**	**26**	
3	4	0	3	1	12	13	66	**68**	71	70	83	77	92	68	69	90	**135**	105	65	34	29	14	12	1
5	4	2	0	1	8	21	**83**	74	66	75	80	86	63	99	102	85	**119**	100	58	40	22	15	6	1
3	2	0	0	4	12	20	**76**	83	78	72	76	77	66	85	88	123	**159**	83	51	41	21	11	4	4
2	1	0	0	8	19	39	**117**	99	61	59	79	91	78	85	113	**137**	109	62	50	30	20	6	4	3

AM Peak 0715 - 0815 (344), AM PHF=0.73 PM Peak 1645 - 1745 (550), PM PHF=0.86

* Wednesday, April 10, 2013=5009, 15 minute drops

0000	0100	0200	0300	0400	0500	0600	0700	0800	0900	1000	1100	1200	1300	1400	1500	1600	1700	1800	1900	2000	2100	2200	2300	
9	**18**	**5**	**2**	**9**	**42**	**109**	**330**	**306**	**290**	**259**	**296**	**368**	**313**	**336**	**407**	**424**	**550**	**392**	**222**	**154**	**83**	**52**	**37**	
1	6	0	0	3	8	22	47	**74**	77	57	62	97	84	68	89	122	**155**	125	69	51	28	13	12	3
1	7	1	0	1	14	22	**87**	69	72	66	83	77	82	86	114	86	**131**	100	64	42	21	12	7	7
4	1	4	1	3	8	30	**86**	78	57	54	79	92	62	99	107	109	**145**	87	47	34	20	11	8	0
3	4	0	1	2	12	35	**110**	86	84	83	72	102	86	84	97	108	**120**	81	42	27	14	16	10	1

AM Peak 0715 - 0815 (357), AM PHF=0.81 PM Peak 1700 - 1800 (550), PM PHF=0.89

* Thursday, April 11, 2013=5134, 15 minute drops

0000	0100	0200	0300	0400	0500	0600	0700	0800	0900	1000	1100	1200	1300	1400	1500	1600	1700	1800	1900	2000	2100	2200	2300	
11	**9**	**7**	**2**	**17**	**36**	**103**	**324**	**311**	**266**	**291**	**340**	**373**	**345**	**381**	**381**	**464**	**568**	**395**	**220**	**137**	**81**	**42**	**35**	
3	0	4	1	1	6	14	53	56	78	83	77	**97**	90	78	86	114	**145**	116	71	34	25	14	8	6
7	1	2	0	3	11	28	74	69	68	75	91	**89**	97	96	76	102	**133**	97	68	38	28	7	8	6
0	7	0	0	7	8	25	69	95	74	71	91	**95**	79	105	102	110	**157**	102	45	28	11	12	11	2
1	1	1	1	6	12	36	129	92	47	62	**82**	92	80	102	117	**138**	134	81	36	37	17	9	8	3

AM Peak 1145 - 1245 (363), AM PHF=0.94 PM Peak 1645 - 1745 (573), PM PHF=0.91

* Friday, April 12, 2013=5481, 15 minute drops

0000	0100	0200	0300	0400	0500	0600	0700	0800	0900	1000	1100	1200	1300	1400	1500	1600	1700	1800	1900	2000	2100	2200	2300	
17	**15**	**12**	**5**	**12**	**48**	**108**	**335**	**315**	**286**	**296**	**357**	**373**	**343**	**374**	**486**	**490**	**523**	**415**	**284**	**165**	**103**	**76**	**49**	
6	3	4	0	1	11	19	56	83	77	64	85	**93**	83	86	99	122	**153**	115	80	39	18	20	13	13
6	3	3	4	3	10	26	62	69	69	70	100	**107**	81	107	123	120	**126**	105	76	55	33	17	17	7
2	5	2	0	4	12	22	94	78	58	80	**84**	80	89	85	127	119	**125**	102	71	37	27	20	9	5
3	4	3	1	4	16	41	123	86	82	83	**88**	93	91	96	138	**130**	120	93	58	34	25	19	10	17

AM Peak 1130 - 1230 (372), AM PHF=0.87 PM Peak 1645 - 1745 (533), PM PHF=0.87

* Saturday, April 13, 2013=4128, 15 minute drops

0000	0100	0200	0300	0400	0500	0600	0700	0800	0900	1000	1100	1200	1300	1400	1500	1600	1700	1800	1900	2000	2100	2200	2300	
42	**46**	**17**	**8**	**12**	**14**	**51**	**113**	**188**	**256**	**323**	**355**	**353**	**354**	**327**	**330**	**320**	**321**	**246**	**159**	**103**	**90**	**59**	**47**	
13	3	7	3	3	2	9	22	35	68	82	**89**	90	95	78	85	83	74	75	45	29	21	23	12	-
7	13	3	2	0	1	17	26	42	67	76	**84**	78	77	81	79	87	85	58	42	31	17	13	15	-
5	17	3	2	1	6	10	34	58	51	75	**94**	87	90	82	81	73	85	62	39	28	34	12	10	-
17	13	4	1	8	5	15	31	53	70	**90**	89	98	92	86	85	77	77	51	33	15	18	11	10	-

AM Peak 1045 - 1145 (356), AM PHF=0.95

MetroCount Traffic Executive
Event Counts

2055 -- English (ENU)

Datasets:

Site:	**07.MORENA BLVD (INGULF ST - MILTON ST) NORTHBOUND**
Input A:	1 - North bound. - Lane= 0, Added to totals. (/2.000)
Input B:	3 - South bound. - Lane= 0, Excluded from totals.
Survey Duration:	17:57 Monday, April 08, 2013 => 11:59 Monday, April 15, 2013
File:	090715Apr2013.EC0 (Base)
Data type:	Axle sensors - Separate (Count)

Profile:

Filter time:	**0:00 Tuesday, April 09, 2013 => 0:00 Sunday, April 14, 2013**

* Tuesday, April 09, 2013=7343, 15 minute drops

0000	0100	0200	0300	0400	0500	0600	0700	0800	0900	1000	1100	1200	1300	1400	1500	1600	1700	1800	1900	2000	2100	2200	2300	
28	**5**	**14**	**13**	**17**	**40**	**152**	**509**	**684**	**418**	**365**	**379**	**506**	**493**	**463**	**585**	**570**	**529**	**484**	**375**	**296**	**245**	**120**	**57**	
8	0	5	2	1	6	20	106	**198**	120	100	87	116	100	122	142	**178**	149	110	96	87	58	39	21	3
5	2	3	0	2	8	30	98	**173**	104	92	79	140	119	94	**139**	130	123	110	76	63	64	38	13	5
6	3	2	6	7	11	39	132	**163**	102	87	98	118	130	107	**159**	139	139	131	106	75	76	21	13	7
9	0	4	5	7	15	63	**174**	150	93	87	116	132	146	141	**146**	124	118	134	98	72	48	22	10	4

AM Peak 0745 - 0845 (708), AM PHF=0.89 PM Peak 1515 - 1615 (621), PM PHF=0.87

* Wednesday, April 10, 2013=7412, 15 minute drops

0000	0100	0200	0300	0400	0500	0600	0700	0800	0900	1000	1100	1200	1300	1400	1500	1600	1700	1800	1900	2000	2100	2200	2300	
19	**13**	**20**	**14**	**15**	**48**	**150**	**470**	**685**	**446**	**381**	**432**	**486**	**540**	**518**	**560**	**528**	**530**	**458**	**394**	**294**	**213**	**134**	**70**	
3	4	7	3	1	8	14	77	**204**	130	93	96	126	133	110	**138**	128	140	136	101	81	60	43	29	9
5	7	3	1	4	13	33	106	**167**	111	91	112	135	129	134	**144**	134	146	107	94	77	50	23	17	13
7	2	5	2	1	12	41	105	**150**	104	81	111	113	131	123	**129**	120	127	110	115	73	59	37	12	9
4	0	5	8	9	15	63	**182**	164	101	117	113	112	147	**152**	150	146	118	105	85	63	45	31	12	8

AM Peak 0745 - 0845 (703), AM PHF=0.86 PM Peak 1445 - 1545 (562), PM PHF=0.92

* Thursday, April 11, 2013=7456, 15 minute drops

0000	0100	0200	0300	0400	0500	0600	0700	0800	0900	1000	1100	1200	1300	1400	1500	1600	1700	1800	1900	2000	2100	2200	2300	
39	**25**	**16**	**12**	**13**	**40**	**154**	**472**	**685**	**416**	**378**	**429**	**501**	**523**	**526**	**564**	**583**	**538**	**463**	**425**	**283**	**176**	**127**	**72**	
9	7	4	3	0	7	18	82	**181**	137	73	89	132	137	125	151	**138**	140	125	123	79	56	35	22	16
13	4	4	3	2	6	26	78	**168**	89	97	106	134	121	126	131	**155**	145	100	119	63	46	41	13	14
9	6	4	4	0	11	48	134	**153**	94	95	123	116	134	134	135	**154**	128	109	86	70	36	27	20	12
8	8	4	2	11	17	63	179	**184**	96	113	112	119	131	142	**149**	137	127	130	98	72	38	24	17	9

AM Peak 0800 - 0900 (685), AM PHF=0.93 PM Peak 1545 - 1645 (595), PM PHF=0.96

* Friday, April 12, 2013=7816, 15 minute drops

0000	0100	0200	0300	0400	0500	0600	0700	0800	0900	1000	1100	1200	1300	1400	1500	1600	1700	1800	1900	2000	2100	2200	2300	
51	**31**	**16**	**14**	**14**	**52**	**167**	**438**	**569**	**377**	**425**	**445**	**545**	**555**	**568**	**625**	**601**	**610**	**467**	**379**	**308**	**253**	**164**	**145**	
16	14	5	2	2	6	20	93	**168**	86	99	100	126	150	115	**168**	155	174	127	91	91	77	59	51	23
14	5	3	8	2	11	37	98	**146**	91	119	112	155	135	126	**155**	155	155	125	97	74	66	45	29	16
12	3	4	1	4	14	38	103	**114**	98	105	116	126	134	155	**157**	139	132	123	94	73	69	30	31	21
9	9	4	3	6	22	72	**146**	142	104	103	118	139	137	**173**	146	152	149	93	98	70	42	30	34	15

AM Peak 0745 - 0845 (573), AM PHF=0.85 PM Peak 1445 - 1545 (652), PM PHF=0.94

* Saturday, April 13, 2013=6259, 15 minute drops

0000	0100	0200	0300	0400	0500	0600	0700	0800	0900	1000	1100	1200	1300	1400	1500	1600	1700	1800	1900	2000	2100	2200	2300	
75	**51**	**32**	**22**	**16**	**17**	**70**	**109**	**212**	**378**	**423**	**494**	**544**	**534**	**540**	**500**	**472**	**469**	**343**	**282**	**232**	**214**	**141**	**94**	
23	12	10	6	1	4	9	21	49	72	105	135	**136**	136	131	131	141	139	80	83	59	66	44	19	-
16	18	7	4	2	2	13	23	45	99	102	125	**132**	122	133	149	110	107	96	72	52	56	35	27	-
21	8	10	6	4	6	24	31	61	96	94	119	**129**	137	126	106	118	121	93	65	63	50	38	25	-
15	13	5	6	9	5	24	34	57	112	123	**115**	147	139	151	115	103	103	75	63	58	42	24	23	-

AM Peak 1145 - 1245 (512), AM PHF=0.94

MetroCount Traffic Executive
Event Counts

2056 -- English (ENU)

Datasets:

Site:	**07.MORENA BLVD (INGULF ST - MILTON ST) SOUTHBOUND**
Input A:	1 - North bound. - Lane= 0, Excluded from totals.
Input B:	3 - South bound. - Lane= 0, Added to totals. (/2.000)
Survey Duration:	17:57 Monday, April 08, 2013 => 11:59 Monday, April 15, 2013
File:	090715Apr2013.EC0 (Base)
Data type:	Axle sensors - Separate (Count)

Profile:

Filter time: **0:00 Tuesday, April 09, 2013 => 0:00 Sunday, April 14, 2013**

* Tuesday, April 09, 2013=6227, 15 minute drops

0000	0100	0200	0300	0400	0500	0600	0700	0800	0900	1000	1100	1200	1300	1400	1500	1600	1700	1800	1900	2000	2100	2200	2300	
18	**13**	**5**	**3**	**17**	**65**	**110**	**401**	**361**	**357**	**357**	**422**	**435**	**381**	**419**	**473**	**566**	**628**	**456**	**314**	**207**	**122**	**70**	**31**	
3	4	0	1	1	13	16	70	83	101	95	99	**105**	106	96	95	123	**170**	131	78	46	37	18	14	6
7	5	2	0	3	11	22	101	80	88	91	**112**	107	85	106	106	110	**151**	137	84	54	31	22	4	2
5	2	0	1	5	18	26	96	93	88	84	**110**	104	83	117	127	153	**179**	107	67	61	24	17	7	5
3	2	3	1	8	24	46	135	106	82	88	**102**	120	108	101	146	**180**	129	82	85	46	30	13	6	4

AM Peak 1115 - 1215 (428), AM PHF=0.96 PM Peak 1645 - 1745 (680), PM PHF=0.94

* Wednesday, April 10, 2013=6242, 15 minute drops

0000	0100	0200	0300	0400	0500	0600	0700	0800	0900	1000	1100	1200	1300	1400	1500	1600	1700	1800	1900	2000	2100	2200	2300	
17	**19**	**11**	**2**	**10**	**53**	**129**	**369**	**349**	**358**	**322**	**401**	**459**	**408**	**408**	**504**	**539**	**646**	**492**	**303**	**230**	**107**	**70**	**39**	
6	6	1	1	3	9	21	52	82	98	82	81	**117**	112	88	111	131	**173**	142	95	71	31	19	13	5
2	7	3	0	1	19	31	102	85	97	83	104	**102**	112	97	120	119	**155**	114	80	64	29	18	8	9
5	1	4	1	4	9	33	91	85	71	69	107	**111**	82	124	135	135	**167**	124	66	52	30	19	8	6
4	5	3	0	2	17	44	124	98	93	89	**111**	131	103	100	139	**154**	151	112	63	44	17	14	10	5

AM Peak 1145 - 1245 (439), AM PHF=0.94 PM Peak 1645 - 1745 (649), PM PHF=0.94

* Thursday, April 11, 2013=6423, 15 minute drops

0000	0100	0200	0300	0400	0500	0600	0700	0800	0900	1000	1100	1200	1300	1400	1500	1600	1700	1800	1900	2000	2100	2200	2300	
25	**10**	**8**	**4**	**16**	**49**	**116**	**372**	**366**	**363**	**391**	**432**	**427**	**437**	**455**	**478**	**589**	**688**	**508**	**289**	**184**	**111**	**65**	**46**	
5	0	3	3	2	7	13	62	79	100	104	90	**111**	119	95	115	161	**176**	133	96	42	34	20	9	11
9	1	3	0	2	16	28	86	77	103	109	**112**	100	119	105	101	132	**169**	132	84	51	35	8	13	7
6	6	1	0	8	9	28	80	101	88	89	**113**	112	102	126	121	144	**183**	129	62	42	21	23	15	2
5	3	1	1	4	18	47	144	109	73	90	**118**	105	98	131	142	153	**162**	115	48	49	21	15	9	4

AM Peak 1115 - 1215 (453), AM PHF=0.96 PM Peak 1700 - 1800 (688), PM PHF=0.94

* Friday, April 12, 2013=6989, 15 minute drops

0000	0100	0200	0300	0400	0500	0600	0700	0800	0900	1000	1100	1200	1300	1400	1500	1600	1700	1800	1900	2000	2100	2200	2300	
24	**18**	**11**	**7**	**16**	**64**	**130**	**400**	**373**	**382**	**362**	**457**	**497**	**446**	**469**	**600**	**644**	**669**	**526**	**345**	**224**	**157**	**101**	**73**	
11	3	4	1	1	13	19	70	90	99	82	112	**132**	112	97	145	154	**190**	155	95	54	38	31	21	22
7	4	4	5	6	17	30	79	82	92	81	106	**140**	109	123	140	**172**	166	129	95	66	43	28	23	13
2	5	1	0	4	17	30	100	102	91	98	114	**114**	115	123	150	**168**	159	126	85	56	35	20	14	4
4	6	2	1	5	18	52	152	100	101	101	**126**	111	111	127	166	**150**	154	117	71	48	41	22	15	14

AM Peak 1145 - 1245 (511), AM PHF=0.91 PM Peak 1615 - 1715 (680), PM PHF=0.89

* Saturday, April 13, 2013=5340, 15 minute drops

0000	0100	0200	0300	0400	0500	0600	0700	0800	0900	1000	1100	1200	1300	1400	1500	1600	1700	1800	1900	2000	2100	2200	2300	
53	**59**	**25**	**14**	**18**	**18**	**70**	**134**	**246**	**330**	**427**	**460**	**473**	**443**	**442**	**420**	**415**	**374**	**316**	**209**	**131**	**119**	**87**	**62**	
22	6	11	3	4	2	14	27	46	87	108	**118**	117	109	111	112	108	86	96	60	48	30	34	15	-
13	16	4	4	0	4	23	30	58	82	99	**112**	113	112	108	100	120	103	76	57	29	27	17	20	-
4	20	6	5	5	7	13	36	72	70	102	**119**	126	98	106	103	86	96	77	52	31	33	15	11	-
14	17	4	2	9	5	20	42	70	91	**119**	112	118	125	117	107	101	89	68	40	23	29	21	16	-

AM Peak 1045 - 1145 (467), AM PHF=0.98

MetroCount Traffic Executive
Event Counts

2057 -- English (ENU)

Datasets:

Site:	**08.MORENA BLVD (MILTON ST - ASHTON ST) NORTHBOUND**
Input A:	1 - North bound. - Lane= 0, Added to totals. (/2.000)
Input B:	3 - South bound. - Lane= 0, Excluded from totals.
Survey Duration:	18:25 Monday, April 08, 2013 => 11:50 Monday, April 15, 2013
File:	090815Apr2013.EC0 (Regular)
Data type:	Axle sensors - Separate (Count)

Profile:

Filter time: **0:00 Tuesday, April 09, 2013 => 0:00 Sunday, April 14, 2013**

* Tuesday, April 09, 2013=7815, 15 minute drops

0000	0100	0200	0300	0400	0500	0600	0700	0800	0900	1000	1100	1200	1300	1400	1500	1600	1700	1800	1900	2000	2100	2200	2300	
28	**7**	**15**	**17**	**12**	**48**	**175**	**544**	**753**	**449**	**378**	**442**	**535**	**514**	**469**	**613**	**601**	**558**	**513**	**406**	**308**	**252**	**120**	**64**	
9	0	6	1	1	10	21	108	**184**	130	105	104	117	104	113	150	**182**	159	113	95	86	57	33	22	2
4	3	1	1	1	7	30	116	**197**	117	101	96	148	125	107	**149**	133	133	121	86	74	72	42	15	4
5	3	2	9	3	13	47	141	**188**	112	77	115	123	135	115	**171**	154	142	131	114	70	74	22	13	8
10	1	6	6	7	19	78	180	**186**	91	96	127	147	151	135	**144**	133	124	148	111	79	50	23	14	5

AM Peak 0800 - 0900 (753), AM PHF=0.96 PM Peak 1515 - 1615 (644), PM PHF=0.89

* Wednesday, April 10, 2013=7900, 15 minute drops

0000	0100	0200	0300	0400	0500	0600	0700	0800	0900	1000	1100	1200	1300	1400	1500	1600	1700	1800	1900	2000	2100	2200	2300	
19	**17**	**18**	**13**	**23**	**46**	**177**	**512**	**763**	**497**	**411**	**466**	**554**	**541**	**503**	**594**	**560**	**589**	**473**	**413**	**296**	**225**	**127**	**69**	
2	7	5	2	2	9	16	71	**203**	143	103	97	143	131	105	135	133	**157**	132	108	87	62	43	23	9
4	7	3	1	3	9	28	121	**179**	125	99	119	151	125	138	168	147	**159**	108	98	64	55	24	19	9
8	2	6	3	3	11	47	118	**188**	106	93	118	131	136	115	146	131	**144**	121	112	73	67	34	11	9
5	1	4	7	15	18	86	**203**	193	123	117	133	130	149	146	146	**150**	129	113	95	73	41	26	16	9

AM Peak 0745 - 0845 (772), AM PHF=0.95 PM Peak 1645 - 1745 (610), PM PHF=0.96

* Thursday, April 11, 2013=7862, 15 minute drops

0000	0100	0200	0300	0400	0500	0600	0700	0800	0900	1000	1100	1200	1300	1400	1500	1600	1700	1800	1900	2000	2100	2200	2300	
36	**23**	**20**	**15**	**15**	**47**	**162**	**503**	**746**	**422**	**400**	**454**	**535**	**543**	**544**	**568**	**641**	**581**	**485**	**433**	**285**	**202**	**126**	**82**	
9	8	6	3	1	8	20	83	**165**	140	76	97	137	130	130	149	**150**	140	132	121	82	55	35	21	17
9	4	3	5	5	6	28	85	**186**	88	107	110	144	137	138	131	**158**	149	114	116	62	55	39	18	16
9	7	6	5	0	13	46	146	**186**	96	100	127	129	140	131	155	**165**	148	115	94	67	49	27	23	12
9	4	5	2	9	20	69	190	**209**	99	117	121	125	136	145	134	**169**	144	125	104	75	44	25	20	12

AM Peak 0800 - 0900 (746), AM PHF=0.89 PM Peak 1600 - 1700 (641), PM PHF=0.95

* Friday, April 12, 2013=8277, 15 minute drops

0000	0100	0200	0300	0400	0500	0600	0700	0800	0900	1000	1100	1200	1300	1400	1500	1600	1700	1800	1900	2000	2100	2200	2300	
57	**29**	**13**	**15**	**14**	**54**	**177**	**448**	**664**	**392**	**440**	**470**	**585**	**592**	**592**	**660**	**649**	**640**	**489**	**402**	**325**	**271**	**162**	**142**	
17	13	5	3	3	7	17	95	**187**	85	110	107	139	167	102	**170**	166	185	144	112	94	76	57	52	24
16	7	1	7	3	14	34	104	**157**	90	127	119	156	151	141	**173**	165	156	128	100	77	70	47	32	20
12	2	3	1	4	13	45	98	**151**	102	100	125	133	136	170	**172**	157	142	112	89	86	75	30	26	19
12	7	4	4	4	21	81	152	**170**	116	104	121	158	139	**180**	147	161	157	105	102	68	50	29	33	15

AM Peak 0800 - 0900 (664), AM PHF=0.89 PM Peak 1445 - 1545 (693), PM PHF=0.97

* Saturday, April 13, 2013=6592, 15 minute drops

0000	0100	0200	0300	0400	0500	0600	0700	0800	0900	1000	1100	1200	1300	1400	1500	1600	1700	1800	1900	2000	2100	2200	2300	
78	**56**	**32**	**22**	**18**	**17**	**65**	**125**	**270**	**392**	**429**	**504**	**565**	**590**	**559**	**512**	**500**	**492**	**362**	**293**	**250**	**213**	**158**	**94**	
24	12	8	6	2	4	9	20	50	80	103	132	**144**	145	124	132	152	152	95	87	67	69	55	19	-
20	20	8	6	2	2	13	22	52	91	98	126	**130**	147	151	144	115	107	91	76	55	51	35	27	-
19	11	9	4	4	5	23	40	97	96	106	117	**146**	157	128	108	118	132	98	66	68	52	39	25	-
15	13	7	6	10	6	21	43	71	125	123	**129**	146	142	156	128	116	102	79	65	61	42	29	23	-

AM Peak 1145 - 1245 (549), AM PHF=0.94

MetroCount Traffic Executive
Event Counts

2058 -- English (ENU)

Datasets:

Site:	**08.MORENA BLVD (MILTON ST - ASHTON ST) SOUTHBOUND**
Input A:	1 - North bound. - Lane= 0, Excluded from totals.
Input B:	3 - South bound. - Lane= 0, Added to totals. (/2.000)
Survey Duration:	18:25 Monday, April 08, 2013 => 11:50 Monday, April 15, 2013
File:	090815Apr2013.EC0 (Regular)
Data type:	Axle sensors - Separate (Count)

Profile:

Filter time: **0:00 Tuesday, April 09, 2013 => 0:00 Sunday, April 14, 2013**

* Tuesday, April 09, 2013=6838, 15 minute drops

0000	0100	0200	0300	0400	0500	0600	0700	0800	0900	1000	1100	1200	1300	1400	1500	1600	1700	1800	1900	2000	2100	2200	2300	
19	**12**	**5**	**5**	**17**	**77**	**137**	**396**	**438**	**453**	**403**	**430**	**449**	**435**	**448**	**523**	**610**	**702**	**486**	**320**	**222**	**141**	**83**	**31**	
3	3	0	1	2	16	20	73	112	**133**	109	97	116	123	113	104	150	**180**	146	86	47	40	25	13	7
6	5	3	0	3	14	27	101	85	**116**	104	117	106	100	112	122	120	**186**	140	79	50	37	19	5	3
5	2	0	2	6	21	28	95	**116**	103	92	115	105	97	121	135	156	**192**	121	73	69	25	22	7	6
5	2	2	2	6	27	62	128	**125**	102	99	102	123	115	102	163	**185**	145	80	83	56	39	17	6	4

AM Peak 0830 - 0930 (489), AM PHF=0.92 PM Peak 1645 - 1745 (742), PM PHF=0.97

* Wednesday, April 10, 2013=6892, 15 minute drops

0000	0100	0200	0300	0400	0500	0600	0700	0800	0900	1000	1100	1200	1300	1400	1500	1600	1700	1800	1900	2000	2100	2200	2300	
20	**18**	**11**	**4**	**14**	**64**	**155**	**389**	**395**	**448**	**343**	**452**	**499**	**462**	**430**	**576**	**578**	**716**	**535**	**319**	**233**	**114**	**79**	**44**	
7	6	1	1	3	7	29	54	95	132	73	99	**132**	120	88	118	145	**205**	148	96	64	36	23	15	7
3	7	2	0	2	25	32	114	96	123	97	109	**110**	116	111	131	127	**182**	132	84	62	32	20	11	9
6	1	4	2	5	11	40	108	88	93	75	**120**	113	100	127	161	147	**178**	127	70	56	31	22	7	8
4	4	4	1	4	21	55	113	117	100	99	**125**	144	126	104	167	**160**	152	128	69	51	15	14	11	5

AM Peak 1130 - 1230 (486), AM PHF=0.92 PM Peak 1645 - 1745 (723), PM PHF=0.88

* Thursday, April 11, 2013=7037, 15 minute drops

0000	0100	0200	0300	0400	0500	0600	0700	0800	0900	1000	1100	1200	1300	1400	1500	1600	1700	1800	1900	2000	2100	2200	2300	
29	**13**	**8**	**7**	**18**	**57**	**136**	**368**	**412**	**425**	**434**	**446**	**449**	**547**	**473**	**519**	**651**	**742**	**545**	**307**	**203**	**121**	**79**	**51**	
7	0	3	4	2	8	13	62	95	**137**	117	98	118	174	104	124	183	**199**	153	102	46	40	24	11	11
9	1	2	0	4	18	34	95	88	**116**	116	113	104	141	100	110	147	**174**	146	85	56	37	12	14	11
8	9	2	2	8	12	31	87	**104**	89	100	119	111	121	134	134	159	**198**	135	61	49	22	25	20	4
5	3	1	1	4	20	58	124	**126**	84	102	117	117	112	136	152	162	**172**	112	59	52	22	18	6	5

AM Peak 0830 - 0930 (483), AM PHF=0.88 PM Peak 1700 - 1800 (742), PM PHF=0.93

* Friday, April 12, 2013=7687, 15 minute drops

0000	0100	0200	0300	0400	0500	0600	0700	0800	0900	1000	1100	1200	1300	1400	1500	1600	1700	1800	1900	2000	2100	2200	2300	
31	**22**	**14**	**7**	**18**	**76**	**153**	**404**	**426**	**460**	**416**	**489**	**540**	**519**	**488**	**664**	**705**	**704**	**571**	**379**	**242**	**170**	**112**	**85**	
11	4	6	1	1	14	21	70	114	124	102	113	**155**	125	103	157	166	**208**	174	101	61	45	36	25	20
11	5	3	2	6	20	33	89	89	115	93	121	**149**	135	131	140	**173**	169	144	107	65	41	25	24	17
4	8	2	3	5	24	36	110	101	108	107	**125**	119	134	121	167	**194**	162	126	89	58	37	29	18	6
5	5	3	1	6	19	63	135	123	114	114	**131**	118	125	133	200	**173**	166	128	83	58	47	22	18	17

AM Peak 1130 - 1230 (559), AM PHF=0.90 PM Peak 1615 - 1715 (746), PM PHF=0.90

* Saturday, April 13, 2013=5825, 15 minute drops

0000	0100	0200	0300	0400	0500	0600	0700	0800	0900	1000	1100	1200	1300	1400	1500	1600	1700	1800	1900	2000	2100	2200	2300	
59	**60**	**30**	**15**	**13**	**24**	**72**	**147**	**264**	**363**	**458**	**508**	**510**	**477**	**470**	**476**	**453**	**388**	**340**	**236**	**164**	**132**	**92**	**78**	
20	6	11	1	3	5	14	34	54	93	110	**124**	127	126	121	123	124	103	107	68	55	30	31	22	-
17	15	6	6	0	7	25	27	59	90	105	**130**	125	119	118	108	125	99	78	61	41	34	23	25	-
6	21	8	6	5	7	13	40	72	80	107	**134**	135	99	113	117	101	99	78	63	38	38	16	14	-
17	18	5	2	5	6	20	47	79	101	**137**	121	124	134	119	128	104	87	78	44	31	30	23	17	-

AM Peak 1045 - 1145 (523), AM PHF=0.96

MetroCount Traffic Executive
Event Counts

2059 -- English (ENU)

Datasets:

Site:	**09.MORENA BLVD (ASHTON ST - MORENA BLVD NORTH SPLIT) NORTHBOUND**
Input A:	1 - North bound. - Lane= 0, Added to totals. (/2.000)
Input B:	3 - South bound. - Lane= 0, Excluded from totals.
Survey Duration:	18:36 Monday, April 08, 2013 => 11:35 Monday, April 15, 2013
File:	090915Apr2013.EC0 (Plus)
Data type:	Axle sensors - Separate (Count)

Profile:

Filter time:	**0:00 Tuesday, April 09, 2013 => 0:00 Sunday, April 14, 2013**

* Tuesday, April 09, 2013=7760, 15 minute drops

0000	0100	0200	0300	0400	0500	0600	0700	0800	0900	1000	1100	1200	1300	1400	1500	1600	1700	1800	1900	2000	2100	2200	2300	
23	**15**	**14**	**16**	**11**	**40**	**159**	**528**	**747**	**437**	**387**	**462**	**542**	**501**	**464**	**624**	**625**	**613**	**472**	**390**	**306**	**228**	**104**	**56**	
7	6	6	1	2	5	16	95	**189**	123	98	101	120	110	112	153	**170**	167	122	93	89	63	31	21	3
5	5	1	2	1	8	25	116	**183**	122	97	119	154	120	109	158	**160**	156	125	75	68	63	32	13	4
6	3	3	9	2	9	44	133	**179**	112	86	111	123	136	107	**174**	164	156	116	120	74	59	21	10	9
5	1	4	4	6	18	75	185	**196**	81	107	132	146	135	138	**140**	132	134	109	103	75	44	21	12	7

AM Peak 0800 - 0900 (747), AM PHF=0.95 PM Peak 1530 - 1630 (642), PM PHF=0.93

* Wednesday, April 10, 2013=7766, 15 minute drops

0000	0100	0200	0300	0400	0500	0600	0700	0800	0900	1000	1100	1200	1300	1400	1500	1600	1700	1800	1900	2000	2100	2200	2300	
23	**15**	**13**	**13**	**16**	**41**	**148**	**496**	**731**	**452**	**401**	**495**	**542**	**508**	**518**	**599**	**583**	**636**	**495**	**401**	**292**	**185**	**97**	**69**	
3	6	2	2	1	7	17	78	**194**	129	105	96	144	132	100	133	135	**170**	138	109	90	64	28	21	8
4	5	4	2	3	5	25	100	**164**	118	97	128	135	124	151	177	163	**164**	127	111	67	47	21	18	15
9	2	5	3	2	10	34	113	**178**	98	89	126	139	123	117	146	136	**157**	119	107	69	41	30	16	9
7	2	2	6	11	19	73	**206**	197	108	111	146	125	130	150	143	**150**	147	112	75	66	34	18	14	8

AM Peak 0745 - 0845 (741), AM PHF=0.90 PM Peak 1645 - 1745 (639), PM PHF=0.94

* Thursday, April 11, 2013=7751, 15 minute drops

0000	0100	0200	0300	0400	0500	0600	0700	0800	0900	1000	1100	1200	1300	1400	1500	1600	1700	1800	1900	2000	2100	2200	2300	
40	**27**	**24**	**14**	**15**	**46**	**138**	**495**	**705**	**394**	**400**	**466**	**524**	**534**	**517**	**572**	**659**	**622**	**474**	**437**	**262**	**186**	**119**	**85**	
8	9	10	2	1	2	14	74	**154**	128	82	103	137	127	122	137	151	**164**	133	126	76	45	32	23	15
15	7	4	5	4	6	20	87	**186**	89	111	100	145	145	133	149	**169**	166	120	120	52	49	35	21	14
9	10	6	5	2	13	41	149	**159**	91	106	126	114	131	126	143	**180**	153	103	94	59	46	26	28	14
8	1	4	2	9	25	64	185	**207**	87	103	138	129	132	138	143	**160**	140	119	97	75	46	26	13	13

AM Peak 0800 - 0900 (705), AM PHF=0.85 PM Peak 1615 - 1715 (672), PM PHF=0.94

* Friday, April 12, 2013=8137, 15 minute drops

0000	0100	0200	0300	0400	0500	0600	0700	0800	0900	1000	1100	1200	1300	1400	1500	1600	1700	1800	1900	2000	2100	2200	2300	
56	**31**	**18**	**17**	**14**	**55**	**148**	**446**	**611**	**360**	**441**	**468**	**578**	**579**	**605**	**654**	**704**	**678**	**482**	**378**	**304**	**223**	**169**	**124**	
15	13	4	7	4	6	14	80	**168**	80	117	100	125	143	121	164	175	**176**	133	112	88	65	49	42	17
14	8	2	5	3	14	30	102	**147**	88	121	118	166	155	137	176	**175**	173	132	100	75	58	41	33	17
14	2	3	2	3	12	40	100	**136**	102	99	118	139	139	173	171	**178**	170	118	79	81	59	36	27	20
13	8	9	3	4	23	64	**166**	161	90	105	133	148	142	175	144	**176**	159	100	87	61	41	43	22	17

AM Peak 0745 - 0845 (616), AM PHF=0.92 PM Peak 1615 - 1715 (705), PM PHF=0.99

* Saturday, April 13, 2013=6522, 15 minute drops

0000	0100	0200	0300	0400	0500	0600	0700	0800	0900	1000	1100	1200	1300	1400	1500	1600	1700	1800	1900	2000	2100	2200	2300	
71	**48**	**33**	**20**	**20**	**16**	**57**	**115**	**276**	**403**	**404**	**532**	**576**	**583**	**557**	**484**	**509**	**495**	**360**	**299**	**228**	**198**	**149**	**93**	
17	8	10	4	1	2	8	16	57	81	90	133	**151**	131	137	128	147	143	95	90	64	59	47	16	-
17	18	6	6	3	4	13	21	53	92	99	126	**129**	153	140	126	117	115	86	71	51	52	40	24	-
20	12	11	7	6	2	19	31	86	102	101	128	**155**	149	122	107	127	134	98	69	66	47	32	31	-
17	10	7	3	10	8	17	47	81	128	115	**145**	142	151	158	124	119	104	81	69	47	41	30	22	-

AM Peak 1145 - 1245 (579), AM PHF=0.93

MetroCount Traffic Executive
Event Counts

2060 -- English (ENU)

Datasets:

Site:	**09.MORENA BLVD (ASHTON ST - MORENA BLVD NORTH SPLIT) SOUTHBOUND**
Input A:	1 - North bound. - Lane= 0, Excluded from totals.
Input B:	3 - South bound. - Lane= 0, Added to totals. (/2.000)
Survey Duration:	18:36 Monday, April 08, 2013 => 11:35 Monday, April 15, 2013
File:	090915Apr2013.EC0 (Plus)
Data type:	Axle sensors - Separate (Count)

Profile:

Filter time:	**0:00 Tuesday, April 09, 2013 => 0:00 Sunday, April 14, 2013**

* Tuesday, April 09, 2013=6636, 15 minute drops

0000	0100	0200	0300	0400	0500	0600	0700	0800	0900	1000	1100	1200	1300	1400	1500	1600	1700	1800	1900	2000	2100	2200	2300	
15	**14**	**8**	**5**	**16**	**84**	**150**	**415**	**453**	**447**	**382**	**443**	**430**	**438**	**437**	**503**	**574**	**654**	**443**	**274**	**193**	**139**	**88**	**34**	
2	4	2	1	2	16	21	73	119	**130**	99	103	107	119	103	101	146	**179**	128	82	35	38	28	15	5
5	4	3	0	4	12	28	105	88	**113**	102	116	106	107	112	117	118	**168**	121	60	56	40	21	9	4
5	3	1	2	6	27	36	105	**117**	102	94	117	100	103	130	128	139	**165**	111	66	58	21	20	7	6
3	3	2	2	4	29	65	132	**130**	103	87	107	118	110	93	158	**172**	143	84	66	44	40	19	3	5

AM Peak 0830 - 0930 (489), AM PHF=0.94 PM Peak 1645 - 1745 (683), PM PHF=0.95

* Wednesday, April 10, 2013=6659, 15 minute drops

0000	0100	0200	0300	0400	0500	0600	0700	0800	0900	1000	1100	1200	1300	1400	1500	1600	1700	1800	1900	2000	2100	2200	2300	
20	**17**	**9**	**3**	**13**	**67**	**160**	**404**	**395**	**409**	**342**	**429**	**474**	**454**	**431**	**562**	**545**	**674**	**465**	**296**	**213**	**138**	**86**	**56**	
5	6	2	1	3	7	28	62	97	132	79	95	**127**	121	89	118	153	**192**	129	90	63	42	24	19	8
4	7	3	1	3	27	36	116	96	105	93	**110**	106	114	121	122	114	**168**	110	74	49	38	24	12	8
6	2	2	1	4	11	45	115	88	84	67	**117**	111	101	109	155	144	**164**	116	73	49	35	24	14	11
5	2	2	0	3	22	53	111	115	89	103	**108**	130	119	113	168	135	**150**	111	60	53	23	14	11	6

AM Peak 1115 - 1215 (461), AM PHF=0.91 PM Peak 1700 - 1800 (674), PM PHF=0.88

* Thursday, April 11, 2013=6818, 15 minute drops

0000	0100	0200	0300	0400	0500	0600	0700	0800	0900	1000	1100	1200	1300	1400	1500	1600	1700	1800	1900	2000	2100	2200	2300	
33	**14**	**11**	**5**	**21**	**60**	**158**	**364**	**413**	**420**	**403**	**444**	**427**	**520**	**469**	**500**	**625**	**688**	**494**	**277**	**198**	**144**	**79**	**55**	
8	0	6	2	2	7	18	60	93	**128**	105	106	117	161	107	125	163	**188**	132	88	46	43	23	14	20
8	1	2	0	4	17	35	95	106	**114**	102	111	99	138	106	110	158	**158**	132	69	57	46	22	9	11
11	10	2	2	8	13	41	94	**95**	90	96	112	104	119	116	137	159	**182**	116	61	45	24	18	24	9
6	3	1	1	7	24	64	116	**119**	89	100	116	108	103	140	130	145	**160**	115	59	50	32	16	8	5

AM Peak 0830 - 0930 (455), AM PHF=0.89 PM Peak 1700 - 1800 (688), PM PHF=0.92

* Friday, April 12, 2013=7461, 15 minute drops

0000	0100	0200	0300	0400	0500	0600	0700	0800	0900	1000	1100	1200	1300	1400	1500	1600	1700	1800	1900	2000	2100	2200	2300	
45	**25**	**14**	**9**	**20**	**72**	**159**	**410**	**423**	**452**	**411**	**424**	**499**	**544**	**493**	**609**	**690**	**670**	**517**	**336**	**244**	**183**	**118**	**100**	
20	6	5	3	2	11	18	69	117	118	96	102	**139**	140	113	144	169	**201**	159	99	67	41	41	32	19
11	6	3	1	6	21	42	95	96	114	99	108	**137**	133	124	138	**171**	167	134	92	68	45	22	24	18
9	6	2	4	7	24	42	108	78	116	109	**115**	109	140	127	147	**181**	154	124	71	48	51	30	23	9
5	7	4	1	5	17	57	138	133	106	107	**100**	114	132	129	181	**169**	149	101	74	61	47	25	22	16

AM Peak 1130 - 1230 (490), AM PHF=0.88 PM Peak 1615 - 1715 (721), PM PHF=0.90

* Saturday, April 13, 2013=5620, 15 minute drops

0000	0100	0200	0300	0400	0500	0600	0700	0800	0900	1000	1100	1200	1300	1400	1500	1600	1700	1800	1900	2000	2100	2200	2300	
62	**55**	**30**	**15**	**11**	**27**	**69**	**149**	**270**	**337**	**458**	**487**	**492**	**476**	**437**	**460**	**419**	**342**	**308**	**247**	**159**	**141**	**103**	**71**	
19	6	9	0	2	6	13	24	62	77	114	**131**	112	133	113	124	112	84	93	69	49	30	32	16	-
18	14	6	6	1	7	25	33	56	89	100	**116**	119	116	112	100	113	96	76	55	41	38	23	22	-
9	21	10	6	3	7	13	38	69	76	112	**131**	140	102	106	121	98	87	73	65	40	36	29	19	-
16	14	5	3	5	8	18	54	84	95	**133**	110	121	126	106	116	97	76	66	58	29	37	19	14	-

AM Peak 1045 - 1145 (510), AM PHF=0.96

MetroCount Traffic Executive
Event Counts

2061 -- English (ENU)

Datasets:

Site: **10.WEST MORENA BLVD (MORENA BLVD NORTH SPLIT - VEGA ST) NORTHBOUND**
Input A: 1 - North bound. - Lane= 0, Added to totals. (/2.000)
Input B: 3 - South bound. - Lane= 0, Excluded from totals.
Survey Duration: 19:12 Monday, April 08, 2013 => 10:23 Monday, April 15, 2013
File: 091015Apr2013.EC0 (Plus)
Data type: Axle sensors - Separate (Count)

Profile:
Filter time: **0:00 Tuesday, April 09, 2013 => 0:00 Sunday, April 14, 2013**

* Tuesday, April 09, 2013=4766, 15 minute drops

0000	0100	0200	0300	0400	0500	0600	0700	0800	0900	1000	1100	1200	1300	1400	1500	1600	1700	1800	1900	2000	2100	2200	2300	
6	**4**	**4**	**4**	**5**	**28**	**92**	**366**	**501**	**298**	**222**	**282**	**337**	**287**	**298**	**390**	**362**	**362**	**286**	**244**	**166**	**140**	**56**	**31**	
2	0	1	0	0	3	16	57	**145**	80	58	61	70	73	66	92	**99**	91	70	56	54	41	16	11	2
2	3	0	0	2	2	14	91	**113**	87	49	79	105	61	66	86	**94**	116	77	42	27	40	20	9	6
1	1	2	3	1	8	22	91	**130**	83	52	67	77	79	80	**109**	90	84	73	86	46	32	9	6	3
1	0	1	1	2	15	40	**128**	114	49	63	75	85	74	86	**103**	81	71	66	61	39	27	11	5	3

AM Peak 0745 - 0845 (516), AM PHF=0.89 PM Peak 1530 - 1630 (404), PM PHF=0.93

* Wednesday, April 10, 2013=4609, 15 minute drops

0000	0100	0200	0300	0400	0500	0600	0700	0800	0900	1000	1100	1200	1300	1400	1500	1600	1700	1800	1900	2000	2100	2200	2300	
14	**5**	**6**	**7**	**6**	**20**	**94**	**344**	**487**	**248**	**250**	**291**	**323**	**282**	**306**	**350**	**355**	**362**	**274**	**210**	**174**	**111**	**50**	**45**	
2	2	1	0	0	2	12	49	**141**	64	64	71	86	72	54	82	82	**100**	78	51	57	42	17	13	1
6	2	2	0	0	2	12	65	**100**	68	57	63	73	76	92	92	85	**101**	77	55	35	21	12	13	3
3	1	2	2	1	7	22	73	**118**	64	62	74	85	62	74	93	**86**	78	67	61	44	28	14	10	5
3	0	1	5	5	9	48	**158**	129	52	68	83	79	73	86	84	**103**	83	53	43	38	20	7	9	3

AM Peak 0745 - 0845 (516), AM PHF=0.82 PM Peak 1630 - 1730 (389), PM PHF=0.95

* Thursday, April 11, 2013=4547, 15 minute drops

0000	0100	0200	0300	0400	0500	0600	0700	0800	0900	1000	1100	1200	1300	1400	1500	1600	1700	1800	1900	2000	2100	2200	2300	
12	**11**	**5**	**8**	**7**	**26**	**84**	**329**	**453**	**231**	**226**	**278**	**306**	**298**	**283**	**354**	**388**	**371**	**264**	**239**	**174**	**107**	**58**	**41**	
1	2	1	1	0	1	9	47	**95**	73	42	65	73	86	71	84	93	**104**	76	66	56	19	16	8	9
3	3	2	3	0	3	17	54	**111**	56	67	60	82	79	69	87	91	**100**	65	76	33	36	23	11	8
5	4	2	3	1	7	21	92	**114**	57	58	73	80	67	75	93	**108**	84	61	53	43	30	9	17	7
3	2	0	1	6	15	37	**137**	134	45	60	81	71	67	68	90	**96**	84	62	45	42	22	10	5	5

AM Peak 0745 - 0845 (456), AM PHF=0.83 PM Peak 1630 - 1730 (407), PM PHF=0.94

* Friday, April 12, 2013=4698, 15 minute drops

0000	0100	0200	0300	0400	0500	0600	0700	0800	0900	1000	1100	1200	1300	1400	1500	1600	1700	1800	1900	2000	2100	2200	2300	
29	**16**	**8**	**6**	**5**	**21**	**90**	**280**	**407**	**190**	**247**	**269**	**345**	**322**	**359**	**388**	**404**	**398**	**262**	**194**	**171**	**137**	**90**	**63**	
9	8	1	1	1	1	8	41	**110**	41	65	56	81	97	69	83	104	**101**	72	52	51	40	28	26	6
8	2	0	3	1	5	17	65	**89**	43	63	66	99	74	78	110	101	**110**	79	56	34	33	21	12	7
7	2	2	0	1	3	26	62	**100**	58	61	64	82	81	106	98	**103**	94	60	42	43	37	22	17	15
5	4	5	2	2	12	39	**113**	108	48	59	83	83	70	107	98	**98**	94	51	44	43	28	20	8	10

AM Peak 0745 - 0845 (412), AM PHF=0.91 PM Peak 1630 - 1730 (411), PM PHF=0.94

* Saturday, April 13, 2013=3670, 15 minute drops

0000	0100	0200	0300	0400	0500	0600	0700	0800	0900	1000	1100	1200	1300	1400	1500	1600	1700	1800	1900	2000	2100	2200	2300	
38	**30**	**14**	**10**	**11**	**12**	**25**	**59**	**124**	**207**	**250**	**299**	**330**	**321**	**296**	**299**	**298**	**283**	**210**	**178**	**136**	**117**	**74**	**52**	
6	6	2	2	0	4	2	9	30	33	60	86	**83**	82	71	76	79	81	58	46	34	38	20	8	-
7	13	5	4	1	3	9	11	18	48	67	69	**66**	78	75	95	66	69	46	52	32	25	18	14	-
15	6	3	3	3	0	7	12	37	59	52	67	**94**	75	74	62	79	76	54	42	38	28	21	16	-
10	5	4	1	7	5	7	27	40	67	72	**77**	88	87	77	67	74	57	52	39	32	26	15	14	-

AM Peak 1145 - 1245 (319), AM PHF=0.85

MetroCount Traffic Executive
Event Counts

2062 -- English (ENU)

Datasets:

Site:	**10.WEST MORENA BLVD (MORENA BLVD NORTH SPLIT - VEGA ST) SOUTHBOUND**
Input A:	1 - North bound. - Lane= 0, Excluded from totals.
Input B:	3 - South bound. - Lane= 0, Added to totals. (/2.000)
Survey Duration:	19:12 Monday, April 08, 2013 => 10:23 Monday, April 15, 2013
File:	091015Apr2013.EC0 (Plus)
Data type:	Axle sensors - Separate (Count)

Profile:

Filter time: **0:00 Tuesday, April 09, 2013 => 0:00 Sunday, April 14, 2013**

* Tuesday, April 09, 2013=4907, 15 minute drops

0000	0100	0200	0300	0400	0500	0600	0700	0800	0900	1000	1100	1200	1300	1400	1500	1600	1700	1800	1900	2000	2100	2200	2300	
9	**7**	**6**	**3**	**14**	**53**	**101**	**330**	**362**	**343**	**261**	**317**	**318**	**321**	**319**	**369**	**410**	**503**	**340**	**210**	**134**	**98**	**61**	**22**	
1	1	2	0	2	13	13	60	**102**	106	72	82	77	88	70	75	108	**134**	101	64	27	26	17	9	2
4	2	2	0	3	9	16	79	**76**	84	71	79	79	84	83	85	81	**131**	104	45	34	30	13	8	3
2	2	1	2	5	17	27	82	**94**	72	71	84	83	66	99	94	103	**131**	78	50	44	9	16	3	3
2	2	1	1	4	15	45	**109**	91	82	48	73	80	84	67	116	**119**	108	58	52	29	33	15	2	3

AM Peak 0745 - 0845 (381), AM PHF=0.87 PM Peak 1645 - 1745 (514), PM PHF=0.96

* Wednesday, April 10, 2013=4887, 15 minute drops

0000	0100	0200	0300	0400	0500	0600	0700	0800	0900	1000	1100	1200	1300	1400	1500	1600	1700	1800	1900	2000	2100	2200	2300	
11	**13**	**5**	**2**	**11**	**51**	**108**	**316**	**298**	**316**	**244**	**309**	**344**	**341**	**307**	**406**	**405**	**515**	**336**	**213**	**151**	**97**	**58**	**33**	
2	4	2	1	1	6	17	52	**74**	99	57	72	78	94	57	82	105	**160**	100	71	43	29	18	10	6
3	6	2	0	3	19	20	**84**	75	78	72	75	88	88	90	90	86	**126**	71	51	38	24	13	6	5
3	1	1	1	4	7	32	**90**	69	69	49	92	78	72	75	116	112	**116**	76	47	34	26	16	10	7
3	2	0	0	3	19	39	**91**	82	71	66	71	101	88	85	120	103	**114**	90	44	36	18	11	7	3

AM Peak 0715 - 0815 (338), AM PHF=0.93 PM Peak 1700 - 1800 (515), PM PHF=0.80

* Thursday, April 11, 2013=5008, 15 minute drops

0000	0100	0200	0300	0400	0500	0600	0700	0800	0900	1000	1100	1200	1300	1400	1500	1600	1700	1800	1900	2000	2100	2200	2300	
21	**11**	**3**	**3**	**17**	**44**	**116**	**286**	**318**	**314**	**278**	**342**	**335**	**353**	**343**	**361**	**463**	**525**	**365**	**191**	**138**	**99**	**52**	**34**	
6	0	1	1	1	5	7	45	75	**103**	67	82	92	101	84	89	123	**143**	96	62	34	26	15	8	12
5	1	1	0	4	13	19	67	74	**83**	81	85	77	101	84	87	128	**126**	106	51	37	36	17	7	6
7	7	1	2	7	11	37	79	**79**	65	62	84	80	72	84	88	116	**135**	81	36	34	15	13	9	6
3	3	0	0	5	16	53	96	**90**	64	68	92	87	80	92	97	97	**121**	83	43	33	22	7	10	3

AM Peak 0830 - 0930 (355), AM PHF=0.86 PM Peak 1700 - 1800 (525), PM PHF=0.92

* Friday, April 12, 2013=5460, 15 minute drops

0000	0100	0200	0300	0400	0500	0600	0700	0800	0900	1000	1100	1200	1300	1400	1500	1600	1700	1800	1900	2000	2100	2200	2300	
27	**20**	**6**	**12**	**11**	**48**	**110**	**321**	**319**	**341**	**305**	**333**	**350**	**385**	**356**	**446**	**504**	**511**	**401**	**234**	**162**	**126**	**77**	**59**	
12	6	3	5	1	7	12	54	**100**	92	78	84	92	100	84	97	120	**155**	128	76	49	24	29	22	14
6	2	1	1	3	18	26	65	**70**	85	65	82	98	89	88	102	119	**131**	114	62	47	33	13	13	11
6	5	1	4	4	16	32	**92**	53	85	77	88	79	104	85	112	**133**	114	88	48	28	38	18	17	4
3	7	1	2	3	8	40	**110**	97	80	86	80	82	92	100	136	**133**	111	72	49	38	32	17	7	11

AM Peak 0730 - 0830 (371), AM PHF=0.84 PM Peak 1630 - 1730 (551), PM PHF=0.89

* Saturday, April 13, 2013=4123, 15 minute drops

0000	0100	0200	0300	0400	0500	0600	0700	0800	0900	1000	1100	1200	1300	1400	1500	1600	1700	1800	1900	2000	2100	2200	2300	
40	**36**	**22**	**9**	**5**	**22**	**44**	**96**	**197**	**240**	**334**	**374**	**373**	**363**	**311**	**351**	**319**	**261**	**225**	**182**	**112**	**98**	**68**	**46**	
14	4	6	1	2	5	7	16	33	48	77	**95**	90	108	80	97	82	65	55	54	32	20	24	9	-
11	6	5	2	1	5	14	21	44	69	80	**100**	97	93	82	83	89	73	62	41	25	30	16	14	-
4	13	6	4	0	4	9	29	54	58	76	**103**	96	79	76	92	73	64	60	50	31	24	17	14	-
11	13	5	2	2	8	15	31	66	65	**102**	77	90	83	74	80	75	60	48	37	24	25	11	9	-

AM Peak 1045 - 1145 (398), AM PHF=0.97

MetroCount Traffic Executive
Event Counts

2063 -- English (ENU)

Datasets:

Site:	**11.WEST MORENA BLVD (VEGA ST & BUENOS AVE) NORTHBOUND**
Input A:	1 - North bound. - Lane= 0, Added to totals. (/2.000)
Input B:	3 - South bound. - Lane= 0, Excluded from totals.
Survey Duration:	19:28 Monday, April 08, 2013 => 11:58 Monday, April 15, 2013
File:	091115Apr2013.EC0 (Plus)
Data type:	Axle sensors - Separate (Count)

Profile:

Filter time: **0:00 Tuesday, April 09, 2013 => 0:00 Sunday, April 14, 2013**

* Tuesday, April 09, 2013=5073, 15 minute drops

0000	0100	0200	0300	0400	0500	0600	0700	0800	0900	1000	1100	1200	1300	1400	1500	1600	1700	1800	1900	2000	2100	2200	2300	
7	**4**	**3**	**6**	**7**	**35**	**94**	**382**	**521**	**312**	**249**	**347**	**366**	**323**	**309**	**409**	**382**	**366**	**330**	**224**	**173**	**143**	**53**	**31**	
2	0	1	0	0	7	14	58	**143**	72	62	78	76	80	70	90	**105**	97	75	50	54	43	16	10	3
2	3	0	0	1	6	14	94	**121**	94	66	101	110	85	72	**98**	88	107	85	40	35	39	19	10	6
2	1	0	4	1	8	26	96	**128**	84	56	83	78	86	87	**115**	92	92	87	79	48	33	6	5	2
1	0	2	2	5	15	40	**134**	130	63	66	86	103	74	81	**107**	98	70	83	55	36	29	12	6	3

AM Peak 0745 - 0845 (525), AM PHF=0.92 PM Peak 1515 - 1615 (424), PM PHF=0.92

* Wednesday, April 10, 2013=4996, 15 minute drops

0000	0100	0200	0300	0400	0500	0600	0700	0800	0900	1000	1100	1200	1300	1400	1500	1600	1700	1800	1900	2000	2100	2200	2300	
14	**4**	**4**	**8**	**6**	**24**	**98**	**344**	**512**	**284**	**316**	**326**	**356**	**317**	**346**	**378**	**357**	**397**	**294**	**223**	**194**	**104**	**49**	**47**	
3	2	1	0	0	2	12	49	**144**	66	81	71	94	76	85	**86**	98	103	85	58	64	36	16	13	2
6	1	2	0	0	1	14	66	**109**	84	72	79	91	83	86	**101**	71	100	85	56	40	21	13	16	2
2	1	1	3	2	7	21	75	**129**	69	84	91	87	82	70	**109**	89	95	67	61	49	29	13	11	5
3	0	0	5	5	14	51	**155**	131	65	80	85	84	77	**106**	83	100	99	57	48	41	18	7	7	3

AM Peak 0745 - 0845 (536), AM PHF=0.87 PM Peak 1445 - 1545 (401), PM PHF=0.92

* Thursday, April 11, 2013=4889, 15 minute drops

0000	0100	0200	0300	0400	0500	0600	0700	0800	0900	1000	1100	1200	1300	1400	1500	1600	1700	1800	1900	2000	2100	2200	2300	
12	**10**	**3**	**6**	**8**	**25**	**94**	**349**	**467**	**260**	**251**	**295**	**341**	**350**	**329**	**372**	**397**	**403**	**289**	**245**	**182**	**110**	**53**	**43**	
2	2	0	0	0	2	8	49	**104**	81	60	69	87	91	75	93	100	**107**	81	65	57	21	13	8	8
2	3	2	2	3	3	20	57	**104**	68	57	63	88	98	81	83	97	**107**	61	78	36	34	22	10	11
5	3	1	3	1	5	22	97	**116**	58	71	84	84	85	85	106	**110**	90	66	56	49	30	9	19	8
3	2	0	1	4	15	44	**146**	144	54	63	79	83	76	88	91	**91**	99	82	47	40	25	9	6	4

AM Peak 0745 - 0845 (469), AM PHF=0.80 PM Peak 1630 - 1730 (415), PM PHF=0.94

* Friday, April 12, 2013=5162, 15 minute drops

0000	0100	0200	0300	0400	0500	0600	0700	0800	0900	1000	1100	1200	1300	1400	1500	1600	1700	1800	1900	2000	2100	2200	2300	
31	**14**	**7**	**5**	**6**	**24**	**96**	**304**	**411**	**221**	**296**	**310**	**401**	**343**	**423**	**413**	**427**	**408**	**320**	**223**	**174**	**146**	**102**	**60**	
8	8	1	1	1	1	9	42	**120**	43	69	73	98	104	87	**91**	112	97	85	59	47	43	35	25	8
11	2	0	2	1	4	22	67	**80**	59	76	74	101	91	92	**114**	96	120	106	62	39	37	20	13	9
8	1	3	0	1	3	24	75	**100**	61	74	78	98	78	**120**	103	116	96	60	49	47	37	28	13	13
4	3	3	2	3	16	42	**120**	111	59	78	86	105	71	**125**	105	104	96	70	53	42	30	19	9	10

AM Peak 0745 - 0845 (420), AM PHF=0.87 PM Peak 1430 - 1530 (449), PM PHF=0.90

* Saturday, April 13, 2013=4461, 15 minute drops

0000	0100	0200	0300	0400	0500	0600	0700	0800	0900	1000	1100	1200	1300	1400	1500	1600	1700	1800	1900	2000	2100	2200	2300	
39	**28**	**13**	**9**	**12**	**18**	**33**	**70**	**150**	**268**	**317**	**383**	**427**	**393**	**390**	**393**	**356**	**323**	**229**	**207**	**168**	**118**	**71**	**51**	
8	5	1	2	0	7	2	13	37	42	77	94	**104**	102	95	105	83	85	62	53	48	39	23	8	-
9	12	5	4	1	4	13	13	26	63	77	89	**90**	99	98	115	85	78	51	57	38	29	19	15	-
13	6	4	2	4	0	10	12	41	76	73	96	**113**	101	91	81	93	84	57	50	44	29	17	14	-
10	5	3	1	7	7	8	32	47	88	90	**104**	120	92	107	92	95	76	60	47	38	21	12	14	-

AM Peak 1145 - 1245 (411), AM PHF=0.91

MetroCount Traffic Executive
Event Counts

2064 -- English (ENU)

Datasets:

Site:	**11.WEST MORENA BLVD (VEGA ST & BUENOS AVE) SOUTHBOUND**
Input A:	1 - North bound. - Lane= 0, Excluded from totals.
Input B:	3 - South bound. - Lane= 0, Added to totals. (/2.000)
Survey Duration:	19:28 Monday, April 08, 2013 => 11:58 Monday, April 15, 2013
File:	091115Apr2013.EC0 (Plus)
Data type:	Axle sensors - Separate (Count)

Profile:

Filter time: **0:00 Tuesday, April 09, 2013 => 0:00 Sunday, April 14, 2013**

* Tuesday, April 09, 2013=5181, 15 minute drops

0000	0100	0200	0300	0400	0500	0600	0700	0800	0900	1000	1100	1200	1300	1400	1500	1600	1700	1800	1900	2000	2100	2200	2300	
11	**6**	**6**	**3**	**15**	**52**	**101**	**311**	**364**	**333**	**268**	**352**	**364**	**374**	**355**	**378**	**429**	**536**	**341**	**229**	**151**	**117**	**65**	**24**	
2	1	1	0	3	13	13	58	**106**	105	66	87	84	95	73	82	120	**139**	93	64	35	39	20	10	2
4	1	2	0	3	8	17	75	**75**	76	71	93	91	108	100	78	83	**142**	95	51	35	33	13	10	2
4	2	1	2	5	18	26	80	**91**	73	72	85	90	77	98	97	105	**133**	83	60	52	15	13	2	2
1	2	2	1	4	14	45	**98**	92	80	60	87	100	95	84	122	121	**122**	70	54	29	30	19	2	3

AM Peak 0745 - 0845 (370), AM PHF=0.87 PM Peak 1700 - 1800 (536), PM PHF=0.95

* Wednesday, April 10, 2013=5222, 15 minute drops

0000	0100	0200	0300	0400	0500	0600	0700	0800	0900	1000	1100	1200	1300	1400	1500	1600	1700	1800	1900	2000	2100	2200	2300	
9	**13**	**6**	**2**	**10**	**54**	**108**	**306**	**306**	**321**	**282**	**350**	**358**	**369**	**341**	**430**	**438**	**523**	**367**	**245**	**175**	**114**	**65**	**34**	
2	4	2	1	1	5	16	48	75	96	53	73	**87**	101	66	94	123	**168**	119	81	48	46	22	11	7
2	5	2	0	3	21	19	82	74	83	85	**81**	79	91	107	91	91	**129**	76	63	51	25	12	7	4
2	2	2	1	3	9	32	87	72	70	63	**107**	84	86	79	118	117	**123**	80	52	41	24	22	9	7
3	2	0	0	3	19	41	91	86	73	82	**91**	108	92	90	128	**107**	103	93	50	35	19	9	7	3

AM Peak 1115 - 1215 (364), AM PHF=0.85 PM Peak 1645 - 1745 (527), PM PHF=0.79

* Thursday, April 11, 2013=5293, 15 minute drops

0000	0100	0200	0300	0400	0500	0600	0700	0800	0900	1000	1100	1200	1300	1400	1500	1600	1700	1800	1900	2000	2100	2200	2300	
21	**10**	**3**	**3**	**21**	**42**	**111**	**285**	**326**	**300**	**272**	**364**	**368**	**379**	**393**	**399**	**486**	**550**	**394**	**213**	**154**	**108**	**60**	**35**	
7	0	1	1	1	6	6	47	78	96	63	88	**86**	101	103	103	122	**148**	102	74	37	29	22	8	12
4	1	1	0	4	11	18	64	75	80	71	93	**93**	114	96	90	138	**128**	101	60	42	39	18	9	8
7	7	1	2	10	11	39	82	79	59	67	79	**99**	82	92	101	117	**154**	91	38	41	17	13	9	8
3	2	0	0	6	15	48	93	95	66	71	**105**	91	84	102	106	110	**121**	101	41	34	23	7	9	3

AM Peak 1145 - 1245 (382), AM PHF=0.91 PM Peak 1700 - 1800 (550), PM PHF=0.89

* Friday, April 12, 2013=5852, 15 minute drops

0000	0100	0200	0300	0400	0500	0600	0700	0800	0900	1000	1100	1200	1300	1400	1500	1600	1700	1800	1900	2000	2100	2200	2300	
31	**19**	**6**	**11**	**10**	**47**	**112**	**313**	**322**	**320**	**340**	**362**	**395**	**412**	**392**	**476**	**565**	**528**	**422**	**283**	**205**	**149**	**80**	**57**	
12	8	3	4	1	8	13	49	105	90	81	89	**95**	95	93	111	152	**159**	126	94	63	30	30	21	17
8	2	1	1	3	16	26	68	70	79	74	95	**121**	96	92	116	124	**138**	120	73	51	39	14	12	15
8	4	1	4	4	15	34	93	53	83	91	**92**	79	118	101	122	**138**	117	96	64	40	51	21	18	8
3	5	1	2	2	8	39	105	94	68	95	**87**	101	103	106	128	**151**	115	81	53	51	29	15	6	16

AM Peak 1130 - 1230 (395), AM PHF=0.82 PM Peak 1630 - 1730 (585), PM PHF=0.92

* Saturday, April 13, 2013=4790, 15 minute drops

0000	0100	0200	0300	0400	0500	0600	0700	0800	0900	1000	1100	1200	1300	1400	1500	1600	1700	1800	1900	2000	2100	2200	2300	
56	**47**	**23**	**10**	**6**	**23**	**42**	**98**	**178**	**248**	**355**	**420**	**418**	**434**	**411**	**425**	**372**	**333**	**286**	**212**	**145**	**106**	**81**	**63**	
17	12	7	1	2	5	7	17	36	48	83	**120**	107	129	105	101	102	86	74	63	43	26	31	11	-
15	8	5	2	0	7	14	20	39	69	81	**107**	110	116	110	106	101	96	76	50	38	29	19	24	-
8	15	6	4	2	4	7	29	46	61	89	**106**	106	90	97	109	94	80	79	58	32	26	19	18	-
16	12	5	3	2	7	14	32	57	71	**103**	88	96	100	100	110	77	73	57	42	32	25	13	10	-

AM Peak 1045 - 1145 (436), AM PHF=0.91

MetroCount Traffic Executive
Event Counts

2113 -- English (ENU)

Datasets:

Site:	**12.WEST MORENA BLVD (BUENOS AVE - MORENA BLVD) NORTHBOUND**
Input A:	1 - North bound. - Lane= 0, Added to totals. (/2.000)
Input B:	3 - South bound. - Lane= 0, Excluded from totals.
Survey Duration:	15:20 Monday, April 08, 2013 => 10:27 Monday, April 15, 2013
File:	091215Apr2013.EC0 (Base)
Data type:	Axle sensors - Separate (Count)

Profile:

Filter time: **0:00 Tuesday, April 09, 2013 => 0:00 Sunday, April 14, 2013**

* Tuesday, April 09, 2013=6052, 15 minute drops

0000	0100	0200	0300	0400	0500	0600	0700	0800	0900	1000	1100	1200	1300	1400	1500	1600	1700	1800	1900	2000	2100	2200	2300	
11	**6**	**6**	**11**	**15**	**55**	**148**	**472**	**673**	**403**	**344**	**429**	**475**	**412**	**358**	**430**	**410**	**381**	**363**	**249**	**171**	**145**	**57**	**31**	
6	0	3	1	3	9	23	86	**184**	89	86	103	102	**103**	85	101	114	103	93	62	54	44	15	10	3
2	4	1	1	1	11	19	110	**168**	121	93	121	**135**	108	90	100	94	106	92	45	34	40	23	10	6
2	1	1	4	2	15	41	116	**172**	95	79	100	**116**	108	100	128	100	101	92	86	51	32	6	5	2
1	1	1	5	9	21	65	**160**	150	99	87	107	**123**	94	85	102	102	71	87	57	33	30	13	6	2

AM Peak 0745 - 0845 (683), AM PHF=0.93 PM Peak 1215 - 1315 (476), PM PHF=0.88

* Wednesday, April 10, 2013=6065, 15 minute drops

0000	0100	0200	0300	0400	0500	0600	0700	0800	0900	1000	1100	1200	1300	1400	1500	1600	1700	1800	1900	2000	2100	2200	2300	
13	**6**	**7**	**10**	**18**	**45**	**172**	**465**	**633**	**385**	**420**	**409**	**447**	**415**	**390**	**442**	**383**	**418**	**357**	**232**	**199**	**105**	**52**	**48**	
3	2	4	1	4	3	22	71	**179**	84	122	91	106	116	88	**116**	103	104	106	55	62	34	16	18	1
6	2	2	1	1	8	26	84	**141**	103	94	97	113	99	98	**116**	79	111	105	58	43	22	13	14	7
2	1	1	2	3	11	35	120	**157**	98	96	114	112	101	90	**121**	100	100	71	68	50	30	16	9	4
2	1	0	6	10	24	90	**191**	157	100	109	108	116	100	**116**	90	102	103	76	51	45	19	7	7	3

AM Peak 0745 - 0845 (667), AM PHF=0.87 PM Peak 1445 - 1545 (468), PM PHF=0.97

* Thursday, April 11, 2013=6013, 15 minute drops

0000	0100	0200	0300	0400	0500	0600	0700	0800	0900	1000	1100	1200	1300	1400	1500	1600	1700	1800	1900	2000	2100	2200	2300	
15	**11**	**6**	**12**	**13**	**48**	**155**	**465**	**599**	**351**	**335**	**371**	**459**	**456**	**398**	**417**	**426**	**446**	**323**	**291**	**195**	**118**	**61**	**47**	
1	3	2	1	1	8	13	72	**147**	105	81	88	101	**121**	104	115	107	112	98	81	64	20	15	12	8
7	3	3	5	0	8	31	70	**134**	100	79	89	120	**140**	107	99	105	118	79	82	37	37	24	10	11
4	2	1	3	3	12	39	130	**150**	67	98	98	**115**	112	93	116	118	110	70	67	48	33	10	19	7
3	3	0	3	9	21	72	**194**	169	80	77	96	**123**	84	95	87	97	106	76	62	47	28	12	6	1

AM Peak 0745 - 0845 (624), AM PHF=0.80 PM Peak 1230 - 1330 (498), PM PHF=0.89

* Friday, April 12, 2013=6551, 15 minute drops

0000	0100	0200	0300	0400	0500	0600	0700	0800	0900	1000	1100	1200	1300	1400	1500	1600	1700	1800	1900	2000	2100	2200	2300	
27	**16**	**8**	**11**	**23**	**43**	**146**	**412**	**552**	**317**	**405**	**414**	**534**	**451**	**518**	**501**	**495**	**437**	**363**	**267**	**226**	**200**	**115**	**76**	
8	10	3	1	3	6	15	60	**172**	80	97	96	112	122	96	**105**	128	108	112	63	51	61	30	30	9
11	2	1	4	3	8	32	95	**108**	80	115	106	135	123	131	**164**	118	131	105	72	58	62	31	17	9
7	1	1	2	7	8	35	98	**130**	78	89	89	144	99	**136**	119	126	106	75	66	62	43	32	16	8
1	3	3	4	10	21	64	**159**	143	80	105	124	144	108	**155**	114	124	93	72	67	56	34	22	14	11

AM Peak 0745 - 0845 (568), AM PHF=0.83 PM Peak 1430 - 1530 (559), PM PHF=0.85

* Saturday, April 13, 2013=5184, 15 minute drops

0000	0100	0200	0300	0400	0500	0600	0700	0800	0900	1000	1100	1200	1300	1400	1500	1600	1700	1800	1900	2000	2100	2200	2300	
37	**25**	**13**	**7**	**18**	**23**	**48**	**106**	**255**	**330**	**399**	**419**	**493**	**460**	**452**	**419**	**385**	**341**	**257**	**249**	**195**	**132**	**76**	**51**	
9	3	1	1	0	10	5	20	51	59	99	103	**117**	120	107	105	89	89	71	58	55	36	22	8	-
9	12	5	5	1	5	14	19	52	75	101	107	**105**	124	114	123	90	82	57	75	47	37	23	17	-
8	5	5	1	5	1	15	22	76	80	92	105	**123**	101	98	91	108	86	67	66	48	38	21	14	-
11	5	2	0	12	7	14	45	77	117	108	**105**	149	116	133	101	99	85	62	51	45	21	10	12	-

AM Peak 1145 - 1245 (449), AM PHF=0.91

MetroCount Traffic Executive
Event Counts

2065 -- English (ENU)

Datasets:

Site:	**12.WEST MORENA BLVD (BUENOS AVE - MORENA BLVD) SOUTHBOUND**
Input A:	1 - North bound. - Lane= 0, Excluded from totals.
Input B:	3 - South bound. - Lane= 0, Added to totals. (/2.000)
Survey Duration:	15:20 Monday, April 08, 2013 => 10:27 Monday, April 15, 2013
File:	091215Apr2013.EC0 (Base)
Data type:	Axle sensors - Separate (Count)

Profile:

Filter time: **0:00 Tuesday, April 09, 2013 => 0:00 Sunday, April 14, 2013**

* Tuesday, April 09, 2013=6068, 15 minute drops

0000	0100	0200	0300	0400	0500	0600	0700	0800	0900	1000	1100	1200	1300	1400	1500	1600	1700	1800	1900	2000	2100	2200	2300	
10	**9**	**6**	**7**	**15**	**55**	**114**	**315**	**383**	**392**	**330**	**426**	**444**	**424**	**400**	**469**	**544**	**630**	**398**	**274**	**178**	**149**	**69**	**31**	
1	1	1	3	3	16	14	62	115	124	73	99	**105**	103	92	97	143	**182**	117	84	48	53	21	12	2
4	3	2	0	3	10	25	80	75	86	103	116	**117**	123	113	105	110	**161**	108	63	38	40	15	12	2
3	2	1	3	5	17	28	83	100	87	87	106	**116**	90	107	125	135	**157**	94	75	53	20	14	4	2
2	3	2	1	4	13	48	90	94	95	68	**105**	106	109	90	143	**157**	131	80	52	40	36	19	3	3

AM Peak 1145 - 1245 (442), AM PHF=0.94 PM Peak 1645 - 1745 (656), PM PHF=0.90

* Wednesday, April 10, 2013=6207, 15 minute drops

0000	0100	0200	0300	0400	0500	0600	0700	0800	0900	1000	1100	1200	1300	1400	1500	1600	1700	1800	1900	2000	2100	2200	2300	
9	**12**	**8**	**2**	**12**	**58**	**122**	**326**	**335**	**361**	**354**	**418**	**466**	**451**	**396**	**516**	**575**	**606**	**438**	**287**	**200**	**145**	**71**	**42**	
2	3	4	1	2	6	18	57	86	112	66	88	**116**	116	83	121	157	**209**	128	97	47	60	22	12	7
2	5	2	0	3	25	23	78	78	86	95	106	**110**	117	115	104	107	**139**	98	71	58	32	13	12	4
2	2	1	1	2	12	39	88	79	78	83	**119**	108	101	92	132	**167**	141	98	68	45	31	27	12	10
3	2	1	0	5	16	42	104	92	85	110	**106**	133	118	107	160	**146**	117	116	52	50	22	9	6	3

AM Peak 1130 - 1230 (449), AM PHF=0.95 PM Peak 1630 - 1730 (660), PM PHF=0.79

* Thursday, April 11, 2013=6265, 15 minute drops

0000	0100	0200	0300	0400	0500	0600	0700	0800	0900	1000	1100	1200	1300	1400	1500	1600	1700	1800	1900	2000	2100	2200	2300	
24	**12**	**4**	**4**	**23**	**41**	**121**	**309**	**368**	**338**	**326**	**419**	**462**	**459**	**446**	**489**	**598**	**679**	**444**	**270**	**185**	**134**	**69**	**46**	
7	1	2	1	1	6	8	51	89	102	70	95	**111**	116	112	115	145	**194**	128	94	42	40	23	15	11
4	3	1	1	4	8	26	70	89	87	82	108	**116**	117	108	116	153	**157**	119	70	49	44	22	11	8
10	6	1	2	11	13	40	89	87	65	92	95	**125**	129	117	136	165	**171**	92	53	54	24	14	11	9
3	2	0	0	7	15	48	100	104	84	84	**121**	111	98	109	123	137	**157**	105	54	41	26	10	9	5

AM Peak 1145 - 1245 (473), AM PHF=0.95 PM Peak 1700 - 1800 (679), PM PHF=0.87

* Friday, April 12, 2013=6761, 15 minute drops

0000	0100	0200	0300	0400	0500	0600	0700	0800	0900	1000	1100	1200	1300	1400	1500	1600	1700	1800	1900	2000	2100	2200	2300	
33	**24**	**9**	**10**	**19**	**51**	**106**	**343**	**346**	**367**	**385**	**441**	**514**	**499**	**468**	**567**	**641**	**614**	**479**	**308**	**218**	**174**	**86**	**64**	
11	8	4	5	3	10	12	57	109	96	99	107	**136**	127	121	141	162	**192**	143	104	66	41	32	22	18
8	2	3	1	6	14	27	72	73	95	86	111	**151**	106	100	142	149	**157**	130	76	58	51	14	17	16
9	7	1	2	7	17	29	97	61	94	90	**113**	102	145	127	127	**179**	132	114	66	46	51	22	18	13
5	7	1	2	4	10	38	118	104	83	111	**111**	126	122	121	158	**152**	133	92	62	49	32	18	7	39

AM Peak 1130 - 1230 (510), AM PHF=0.84 PM Peak 1630 - 1730 (679), PM PHF=0.88

* Saturday, April 13, 2013=5450, 15 minute drops

0000	0100	0200	0300	0400	0500	0600	0700	0800	0900	1000	1100	1200	1300	1400	1500	1600	1700	1800	1900	2000	2100	2200	2300	
86	**63**	**31**	**17**	**8**	**22**	**45**	**108**	**181**	**289**	**416**	**470**	**454**	**485**	**469**	**478**	**422**	**387**	**320**	**232**	**165**	**132**	**98**	**77**	
18	20	12	2	3	4	7	19	35	61	97	**127**	114	148	121	127	120	105	86	75	50	45	31	12	-
16	11	6	4	0	4	16	21	41	72	96	**120**	127	131	120	105	114	110	83	63	47	38	24	29	-
13	19	8	7	2	7	7	31	49	69	113	**121**	106	105	102	122	95	92	79	51	32	23	29	21	-
39	13	5	4	3	8	15	37	57	89	**111**	103	107	101	127	125	93	80	73	43	37	27	15	15	-

AM Peak 1045 - 1145 (478), AM PHF=0.94

MetroCount Traffic Executive
Event Counts

2066 -- English (ENU)

Datasets:

Site:	**13.MORENA BLVD (WEST MORENA BLVD - NAPA ST) NORTHBOUND**
Input A:	1 - North bound. - Lane= 0, Added to totals. (/2.000)
Input B:	3 - South bound. - Lane= 0, Excluded from totals.
Survey Duration:	15:48 Monday, April 08, 2013 => 11:26 Monday, April 15, 2013
File:	091315Apr2013.EC0 (Regular)
Data type:	Axle sensors - Separate (Count)

Profile:

Filter time:	**0:00 Tuesday, April 09, 2013 => 0:00 Sunday, April 14, 2013**

* Tuesday, April 09, 2013=14431, 15 minute drops

0000	0100	0200	0300	0400	0500	0600	0700	0800	0900	1000	1100	1200	1300	1400	1500	1600	1700	1800	1900	2000	2100	2200	2300	
41	**19**	**20**	**22**	**41**	**140**	**383**	**1088**	**1308**	**925**	**810**	**887**	**1036**	**924**	**917**	**1080**	**983**	**976**	**820**	**706**	**569**	**463**	**183**	**97**	
17	5	9	4	7	18	52	176	**321**	223	201	214	233	225	190	256	**264**	247	208	197	169	127	65	39	10
10	8	4	5	3	29	61	226	**334**	258	215	230	317	246	237	**268**	244	255	209	172	160	139	50	22	15
5	1	3	6	11	37	121	287	**351**	240	189	204	240	234	251	**288**	232	257	219	194	124	115	39	15	12
9	5	4	7	20	57	150	**400**	303	205	205	240	247	219	240	**269**	244	218	185	144	117	82	29	21	8

AM Peak 0745 - 0845 (1404), AM PHF=0.88 PM Peak 1515 - 1615 (1088), PM PHF=0.94

* Wednesday, April 10, 2013=14561, 15 minute drops

0000	0100	0200	0300	0400	0500	0600	0700	0800	0900	1000	1100	1200	1300	1400	1500	1600	1700	1800	1900	2000	2100	2200	2300	
45	**22**	**22**	**18**	**47**	**135**	**416**	**1079**	**1312**	**952**	**808**	**934**	**1010**	**929**	**931**	**1045**	**1014**	**1089**	**863**	**671**	**527**	**377**	**193**	**127**	
10	8	12	2	8	15	61	170	**352**	236	234	219	225	235	211	260	272	**273**	222	219	142	108	60	39	8
15	6	5	7	7	28	80	217	**295**	233	187	232	265	251	231	264	255	**273**	232	170	105	93	51	38	15
12	4	4	3	12	32	101	286	**344**	247	190	251	273	212	244	265	249	**301**	208	150	138	85	47	24	10
8	4	1	7	21	61	175	**407**	322	237	198	233	248	232	247	256	239	**243**	201	132	143	92	35	26	6

AM Peak 0745 - 0845 (1397), AM PHF=0.86 PM Peak 1700 - 1800 (1089), PM PHF=0.91

* Thursday, April 11, 2013=14620, 15 minute drops

0000	0100	0200	0300	0400	0500	0600	0700	0800	0900	1000	1100	1200	1300	1400	1500	1600	1700	1800	1900	2000	2100	2200	2300	
39	**26**	**25**	**21**	**34**	**147**	**399**	**1050**	**1268**	**851**	**804**	**925**	**1083**	**952**	**1024**	**1037**	**1074**	**1137**	**812**	**705**	**517**	**359**	**197**	**140**	
8	7	6	4	3	24	46	182	**306**	246	197	208	257	252	263	272	273	**281**	224	195	170	85	55	38	21
15	7	10	7	5	22	78	165	**295**	227	197	212	287	253	273	247	272	**283**	189	188	121	110	67	35	21
10	6	7	5	8	38	112	318	**334**	176	202	245	266	237	248	276	280	**317**	195	146	108	82	35	46	19
6	6	2	5	18	64	164	**386**	333	202	208	260	273	211	241	242	250	**257**	205	176	120	83	40	21	15

AM Peak 0745 - 0845 (1321), AM PHF=0.86 PM Peak 1700 - 1800 (1137), PM PHF=0.90

* Friday, April 12, 2013=14938, 15 minute drops

0000	0100	0200	0300	0400	0500	0600	0700	0800	0900	1000	1100	1200	1300	1400	1500	1600	1700	1800	1900	2000	2100	2200	2300	
76	**40**	**26**	**26**	**38**	**128**	**384**	**979**	**1173**	**788**	**896**	**956**	**1163**	**998**	**1148**	**1073**	**1092**	**1037**	**860**	**619**	**523**	**433**	**284**	**200**	
21	15	9	5	5	22	55	165	**309**	207	229	218	**276**	266	242	246	275	271	242	182	127	110	89	65	26
21	8	7	5	8	18	84	197	**272**	203	226	259	**330**	260	300	289	267	299	239	171	144	131	56	52	28
19	7	2	8	9	31	91	287	**292**	182	228	236	**276**	233	283	283	287	250	209	125	145	101	76	42	25
15	10	8	8	16	58	155	**331**	302	197	214	244	**281**	240	324	256	264	218	171	141	109	92	64	42	29

AM Peak 0745 - 0845 (1202), AM PHF=0.91 PM Peak 1200 - 1300 (1163), PM PHF=0.88

* Saturday, April 13, 2013=11834, 15 minute drops

0000	0100	0200	0300	0400	0500	0600	0700	0800	0900	1000	1100	1200	1300	1400	1500	1600	1700	1800	1900	2000	2100	2200	2300	
108	**60**	**54**	**28**	**36**	**54**	**171**	**307**	**569**	**767**	**809**	**921**	**1030**	**1000**	**960**	**967**	**875**	**759**	**648**	**547**	**411**	**367**	**245**	**145**	
26	9	14	7	4	15	31	60	137	168	211	222	**246**	247	227	249	223	188	191	143	108	118	71	35	-
28	23	13	9	3	9	31	51	112	185	188	230	**239**	261	240	256	205	186	169	139	99	98	66	42	-
25	10	12	8	10	13	50	76	152	182	194	225	**287**	228	225	231	225	208	157	137	98	83	61	35	-
29	19	15	4	19	18	59	120	169	233	218	**245**	259	266	268	231	223	179	132	129	106	68	48	33	-

AM Peak 1145 - 1245 (1017), AM PHF=0.89

MetroCount Traffic Executive
Event Counts

2067 -- English (ENU)

Datasets:

Site:	**13.MORENA BLVD (WEST MORENA BLVD - NAPA ST) SOUTHBOUND**
Input A:	1 - North bound. - Lane= 0, Excluded from totals.
Input B:	3 - South bound. - Lane= 0, Added to totals. (/2.000)
Survey Duration:	15:48 Monday, April 08, 2013 => 11:26 Monday, April 15, 2013
File:	091315Apr2013.EC0 (Regular)
Data type:	Axle sensors - Separate (Count)

Profile:

Filter time:	**0:00 Tuesday, April 09, 2013 => 0:00 Sunday, April 14, 2013**

* Tuesday, April 09, 2013=14116, 15 minute drops

0000	0100	0200	0300	0400	0500	0600	0700	0800	0900	1000	1100	1200	1300	1400	1500	1600	1700	1800	1900	2000	2100	2200	2300	
34	**28**	**22**	**16**	**28**	**108**	**280**	**729**	**974**	**874**	**838**	**984**	**1055**	**986**	**953**	**1012**	**1288**	**1387**	**931**	**614**	**389**	**318**	**183**	**90**	
5	3	6	7	5	27	37	126	262	266	184	253	**266**	267	220	246	336	**397**	267	183	115	102	66	30	16
9	6	2	2	5	22	67	170	198	182	247	246	**288**	233	254	221	283	**347**	231	148	87	79	40	27	13
10	12	9	3	8	27	73	215	243	214	219	230	**265**	237	269	282	322	**329**	209	161	96	65	36	15	14
10	8	6	4	10	33	103	219	271	213	189	**256**	237	250	211	263	**347**	314	225	123	91	74	42	19	17

AM Peak 1145 - 1245 (1074), AM PHF=0.93 PM Peak 1645 - 1745 (1420), PM PHF=0.89

* Wednesday, April 10, 2013=14342, 15 minute drops

0000	0100	0200	0300	0400	0500	0600	0700	0800	0900	1000	1100	1200	1300	1400	1500	1600	1700	1800	1900	2000	2100	2200	2300	
60	**33**	**27**	**10**	**23**	**113**	**289**	**733**	**874**	**876**	**835**	**979**	**1040**	**992**	**933**	**1146**	**1301**	**1401**	**980**	**620**	**501**	**314**	**167**	**101**	
16	8	7	2	4	17	42	131	207	244	172	222	**264**	268	220	286	338	**470**	267	210	123	114	53	30	18
13	6	3	0	4	36	59	170	202	183	219	241	**266**	264	252	246	286	**325**	244	159	151	81	47	29	14
14	13	11	4	7	24	85	208	205	227	206	**274**	244	209	232	295	**356**	321	222	152	115	67	39	24	22
17	6	6	4	8	37	104	225	261	222	239	**243**	267	251	230	320	**321**	285	248	99	113	52	28	19	6

AM Peak 1130 - 1230 (1046), AM PHF=0.95 PM Peak 1630 - 1730 (1472), PM PHF=0.78

* Thursday, April 11, 2013=14550, 15 minute drops

0000	0100	0200	0300	0400	0500	0600	0700	0800	0900	1000	1100	1200	1300	1400	1500	1600	1700	1800	1900	2000	2100	2200	2300	
60	**35**	**22**	**14**	**41**	**93**	**284**	**698**	**929**	**783**	**824**	**989**	**1103**	**1059**	**980**	**1088**	**1314**	**1444**	**995**	**709**	**475**	**325**	**185**	**109**	
18	7	5	2	6	18	34	120	188	230	197	218	**273**	274	231	234	324	**406**	277	197	132	88	62	30	26
14	10	5	5	8	20	65	150	225	195	203	258	**264**	262	262	270	342	**371**	275	186	125	100	57	31	19
22	15	9	3	13	25	73	201	250	155	221	253	**285**	280	248	311	346	**364**	232	169	114	72	35	27	31
6	3	3	4	14	30	113	228	266	203	204	**261**	281	245	240	274	303	**304**	212	158	104	66	32	21	17

AM Peak 1145 - 1245 (1082), AM PHF=0.95 PM Peak 1700 - 1800 (1444), PM PHF=0.89

* Friday, April 12, 2013=14985, 15 minute drops

0000	0100	0200	0300	0400	0500	0600	0700	0800	0900	1000	1100	1200	1300	1400	1500	1600	1700	1800	1900	2000	2100	2200	2300	
93	**76**	**39**	**30**	**34**	**105**	**262**	**744**	**837**	**849**	**868**	**1032**	**1143**	**1042**	**990**	**1213**	**1395**	**1338**	**1029**	**664**	**456**	**373**	**222**	**157**	
26	22	11	8	5	17	35	112	238	206	204	251	**281**	289	244	297	344	**420**	296	211	133	92	65	54	49
19	9	14	9	7	26	62	151	173	228	186	266	**341**	239	253	289	329	**363**	310	183	117	104	54	43	35
31	29	9	8	9	30	71	227	184	208	208	**256**	244	277	247	291	**376**	293	224	148	113	109	55	35	38
17	17	5	5	14	33	95	254	243	208	270	**260**	277	237	246	336	**347**	262	200	123	94	68	49	26	83

AM Peak 1130 - 1230 (1137), AM PHF=0.83 PM Peak 1630 - 1730 (1506), PM PHF=0.90

* Saturday, April 13, 2013=12077, 15 minute drops

0000	0100	0200	0300	0400	0500	0600	0700	0800	0900	1000	1100	1200	1300	1400	1500	1600	1700	1800	1900	2000	2100	2200	2300	
204	**156**	**80**	**46**	**22**	**42**	**123**	**275**	**536**	**692**	**912**	**1001**	**991**	**1022**	**981**	**948**	**929**	**810**	**700**	**521**	**361**	**283**	**237**	**210**	
49	57	26	8	8	7	21	52	102	139	210	**269**	269	299	243	246	265	205	181	152	92	81	76	49	-
35	31	19	10	2	8	30	45	119	170	212	**253**	255	290	232	217	251	222	195	143	105	79	58	63	-
38	38	16	16	3	13	25	81	141	171	214	**237**	222	213	228	235	203	199	152	126	79	55	59	49	-
83	31	19	13	9	15	47	97	176	212	**276**	242	246	221	278	251	211	185	173	102	86	69	44	49	-

AM Peak 1045 - 1145 (1035), AM PHF=0.94

MetroCount Traffic Executive
Event Counts

2068 -- English (ENU)

Datasets:

Site:	**14.MORENA BLVD (NAPA ST/ SHERMAN ST - LINDA VISTA RD) NORTHBOUND**
Input A:	1 - North bound. - Lane= 0, Added to totals. (/2.000)
Input B:	3 - South bound. - Lane= 0, Excluded from totals.
Survey Duration:	13:58 Monday, April 08, 2013 => 9:53 Monday, April 15, 2013
File:	091415Apr2013.INCOMPLETE.EC0 (Base)
Data type:	Axle sensors - Separate (Count)

Profile:

Filter time:	**0:00 Tuesday, April 09, 2013 => 0:00 Thursday, April 11, 2013**

*** Tuesday, April 09, 2013=9175, 15 minute drops**

0000	0100	0200	0300	0400	0500	0600	0700	0800	0900	1000	1100	1200	1300	1400	1500	1600	1700	1800	1900	2000	2100	2200	2300	
31	**23**	**23**	**16**	**66**	**137**	**435**	**810**	**1067**	**664**	**562**	**586**	**650**	**602**	**557**	**627**	**537**	**471**	**421**	**311**	**256**	**180**	**92**	**58**	
14	10	9	4	10	15	57	142	**291**	167	167	153	**160**	140	126	163	140	111	115	83	78	52	32	19	13
8	5	4	1	16	31	77	176	**230**	178	151	162	**168**	167	157	151	144	136	117	76	65	51	23	14	8
4	1	5	6	13	35	128	234	**273**	189	108	136	**137**	151	130	163	118	108	99	94	73	43	21	15	6
5	7	6	6	28	58	174	258	**273**	131	137	135	**185**	145	144	150	135	117	90	59	41	35	16	11	5

AM Peak 0800 - 0900 (1067), AM PHF=0.92 PM Peak 1200 - 1300 (650), PM PHF=0.88

*** Wednesday, April 10, 2013=10856, 15 minute drops**

0000	0100	0200	0300	0400	0500	0600	0700	0800	0900	1000	1100	1200	1300	1400	1500	1600	1700	1800	1900	2000	2100	2200	2300	
31	**35**	**23**	**21**	**50**	**148**	**438**	**747**	**891**	**825**	**593**	**620**	**702**	**720**	**871**	**1008**	**853**	**821**	**606**	**380**	**259**	**99**	**66**	**54**	
13	15	8	4	6	23	65	123	**242**	177	176	138	157	155	182	252	259	216	176	124	112	26	13	11	-
8	11	10	5	8	30	101	139	**206**	217	126	150	179	175	172	247	197	205	157	97	54	26	19	28	-
6	3	4	4	15	25	103	203	**215**	247	134	182	187	147	186	291	192	193	132	73	64	30	24	10	-
5	7	1	8	22	71	170	**283**	229	185	158	150	180	244	332	219	205	209	142	86	29	17	11	6	-

AM Peak 0745 - 0845 (945), AM PHF=0.84

MetroCount Traffic Executive
Event Counts

2069 -- English (ENU)

Datasets:

Site:	**14.MORENA BLVD (NAPA ST/ SHERMAN ST - LINDA VISTA RD) SOUTHBOUND**
Input A:	1 - North bound. - Lane= 0, Excluded from totals.
Input B:	3 - South bound. - Lane= 0, Added to totals. (/2.000)
Survey Duration:	13:58 Monday, April 08, 2013 => 9:53 Monday, April 15, 2013
File:	091415Apr2013.INCOMPLETE.EC0 (Base)
Data type:	Axle sensors - Separate (Count)

Profile:

Filter time:	**0:00 Tuesday, April 09, 2013 => 0:00 Thursday, April 11, 2013**

*** Tuesday, April 09, 2013=11519, 15 minute drops**

0000	0100	0200	0300	0400	0500	0600	0700	0800	0900	1000	1100	1200	1300	1400	1500	1600	1700	1800	1900	2000	2100	2200	2300	
17	**14**	**14**	**14**	**25**	**88**	**164**	**481**	**663**	**693**	**677**	**910**	**867**	**892**	**744**	**990**	**1142**	**1066**	**823**	**519**	**322**	**213**	**119**	**66**	
8	4	0	8	3	21	34	83	203	174	187	**226**	188	250	168	197	324	**380**	264	171	106	74	48	26	11
3	3	2	0	3	16	37	118	118	161	164	**275**	192	255	182	206	262	**328**	198	128	75	57	30	20	13
3	7	8	4	8	20	34	118	202	195	188	**183**	263	192	189	333	**313**	200	226	130	63	35	20	9	9
3	0	4	2	12	31	59	163	140	163	139	**227**	225	196	205	254	**244**	159	136	90	79	48	21	12	6

AM Peak 1100 - 1200 (910), AM PHF=0.83 PM Peak 1630 - 1730 (1264), PM PHF=0.83

*** Wednesday, April 10, 2013=12167, 15 minute drops**

0000	0100	0200	0300	0400	0500	0600	0700	0800	0900	1000	1100	1200	1300	1400	1500	1600	1700	1800	1900	2000	2100	2200	2300	
38	**15**	**19**	**10**	**20**	**93**	**215**	**473**	**713**	**718**	**780**	**949**	**955**	**960**	**863**	**1058**	**1242**	**1015**	**804**	**463**	**380**	**232**	**100**	**57**	
11	6	4	2	4	7	39	92	194	176	199	180	**270**	258	214	278	380	416	238	178	85	95	29	23	-
13	2	1	0	1	36	43	117	159	152	192	**256**	226	284	245	238	250	243	208	117	107	53	20	20	-
9	5	10	5	3	22	58	124	177	213	186	**244**	245	202	210	314	366	192	181	101	93	43	35	10	-
6	2	5	4	13	28	76	141	184	177	204	**269**	215	217	194	229	247	165	178	68	96	42	18	4	-

AM Peak 1115 - 1215 (1038), AM PHF=0.96

MetroCount Traffic Executive
Event Counts

2103 -- English (ENU)

Datasets:

Site:	**15.MORENA BLVD (SOUTH OF LINDA VISTA RD) NORTHBOUND**
Input A:	1 - North bound. - Lane= 0, Added to totals. (/2.000)
Input B:	3 - South bound. - Lane= 0, Excluded from totals.
Survey Duration:	13:26 Monday, April 08, 2013 => 9:46 Monday, April 15, 2013
File:	91515Apr2013.EC0 (Base)
Data type:	Axle sensors - Separate (Count)

Profile:

Filter time:	**0:00 Tuesday, April 09, 2013 => 0:00 Sunday, April 14, 2013**

* Tuesday, April 09, 2013=18710, 15 minute drops

0000	0100	0200	0300	0400	0500	0600	0700	0800	0900	1000	1100	1200	1300	1400	1500	1600	1700	1800	1900	2000	2100	2200	2300	
67	**44**	**38**	**35**	**127**	**447**	**770**	**1425**	**1625**	**1188**	**1062**	**1139**	**1257**	**1139**	**1161**	**1301**	**1270**	**1343**	**1048**	**720**	**605**	**463**	**264**	**178**	
31	17	15	8	14	65	106	259	**398**	294	289	275	317	262	287	314	323	**340**	277	189	161	115	81	50	31
17	7	4	7	25	127	164	333	**376**	311	298	302	328	292	311	322	311	**374**	272	185	166	119	73	48	22
8	8	10	8	29	121	208	435	**423**	313	239	267	291	289	286	341	293	**311**	230	175	160	110	52	38	17
11	12	9	12	60	135	293	399	**428**	272	236	296	321	297	277	325	**343**	319	270	171	119	119	59	43	13

AM Peak 0800 - 0900 (1625), AM PHF=0.95 PM Peak 1645 - 1745 (1367), PM PHF=0.91

* Wednesday, April 10, 2013=18323, 15 minute drops

0000	0100	0200	0300	0400	0500	0600	0700	0800	0900	1000	1100	1200	1300	1400	1500	1600	1700	1800	1900	2000	2100	2200	2300	
83	**64**	**43**	**38**	**102**	**345**	**762**	**1320**	**1569**	**1375**	**1063**	**1081**	**1240**	**1170**	**1170**	**1280**	**1209**	**1299**	**984**	**671**	**515**	**466**	**297**	**186**	
31	23	17	8	15	47	127	250	**400**	335	269	250	307	292	273	297	**325**	319	257	176	143	117	87	56	22
22	15	13	8	17	84	172	271	**373**	340	255	269	329	291	276	**332**	317	359	244	176	133	120	81	60	26
17	8	8	5	28	75	187	390	**416**	368	240	271	289	275	307	**329**	269	318	242	162	132	105	76	34	18
13	19	5	17	42	139	277	**410**	381	333	299	291	315	313	315	**322**	299	304	242	157	107	125	53	37	25

AM Peak 0745 - 0845 (1598), AM PHF=0.96 PM Peak 1515 - 1615 (1307), PM PHF=0.99

* Thursday, April 11, 2013=18809, 15 minute drops

0000	0100	0200	0300	0400	0500	0600	0700	0800	0900	1000	1100	1200	1300	1400	1500	1600	1700	1800	1900	2000	2100	2200	2300	
91	**55**	**43**	**41**	**111**	**431**	**726**	**1357**	**1553**	**1209**	**1033**	**1182**	**1248**	**1225**	**1229**	**1275**	**1320**	**1397**	**996**	**741**	**571**	**442**	**326**	**215**	
22	15	13	6	14	60	110	238	**338**	353	251	266	329	296	295	290	348	**391**	255	188	170	103	84	60	26
26	13	11	13	25	110	144	248	**359**	316	243	294	303	328	319	339	327	**381**	264	202	139	117	88	63	45
18	13	10	10	24	123	189	**421**	389	240	280	308	299	326	304	344	**315**	313	229	168	145	111	74	52	54
25	14	9	12	49	139	283	**451**	468	300	259	315	318	276	311	303	**330**	313	249	184	118	111	80	40	32

AM Peak 0730 - 0830 (1568), AM PHF=0.87 PM Peak 1630 - 1730 (1417), PM PHF=0.91

* Friday, April 12, 2013=19362, 15 minute drops

0000	0100	0200	0300	0400	0500	0600	0700	0800	0900	1000	1100	1200	1300	1400	1500	1600	1700	1800	1900	2000	2100	2200	2300	
156	**91**	**71**	**41**	**99**	**328**	**757**	**1277**	**1442**	**1187**	**1120**	**1203**	**1320**	**1289**	**1335**	**1310**	**1378**	**1239**	**967**	**799**	**645**	**521**	**499**	**292**	
26	32	23	12	15	38	133	234	**339**	306	285	300	345	327	293	319	**341**	289	257	206	174	127	113	110	35
45	24	16	6	15	76	162	310	**363**	309	282	302	307	330	371	334	**393**	322	240	221	176	139	129	72	49
54	11	17	9	29	92	173	372	**376**	276	262	275	311	318	343	**339**	302	306	231	174	170	136	116	56	48
32	24	15	14	40	123	290	362	**365**	297	292	327	358	314	328	**319**	343	323	240	199	126	120	142	55	41

AM Peak 0800 - 0900 (1442), AM PHF=0.96 PM Peak 1530 - 1630 (1391), PM PHF=0.89

* Saturday, April 13, 2013=14649, 15 minute drops

0000	0100	0200	0300	0400	0500	0600	0700	0800	0900	1000	1100	1200	1300	1400	1500	1600	1700	1800	1900	2000	2100	2200	2300	
172	**131**	**121**	**55**	**61**	**130**	**231**	**474**	**863**	**936**	**1012**	**1097**	**1247**	**1172**	**1106**	**1024**	**1030**	**873**	**728**	**641**	**512**	**448**	**377**	**212**	
35	27	41	15	11	20	26	83	164	221	244	240	**299**	304	267	246	266	240	181	183	139	121	105	60	-
49	46	42	10	13	31	56	99	199	230	265	259	**305**	281	285	268	263	213	178	172	124	130	109	59	-
48	27	21	11	15	34	51	119	228	236	238	299	**309**	306	257	249	265	219	186	136	129	117	99	49	-
41	31	17	19	22	46	98	174	272	250	265	**300**	335	282	298	262	236	202	183	151	120	81	64	44	-

AM Peak 1145 - 1245 (1212), AM PHF=0.98

MetroCount Traffic Executive
Event Counts

2104 -- English (ENU)

Datasets:

Site:	**15.MORENA BLVD (SOUTH OF LINDA VISTA RD) SOUTHBOUND**
Input A:	1 - North bound. - Lane= 0, Excluded from totals.
Input B:	3 - South bound. - Lane= 0, Added to totals. (/2.000)
Survey Duration:	13:26 Monday, April 08, 2013 => 9:46 Monday, April 15, 2013
File:	91515Apr2013.EC0 (Base)
Data type:	Axle sensors - Separate (Count)

Profile:

Filter time: **0:00 Tuesday, April 09, 2013 => 0:00 Sunday, April 14, 2013**

* Tuesday, April 09, 2013=17759, 15 minute drops

0000	0100	0200	0300	0400	0500	0600	0700	0800	0900	1000	1100	1200	1300	1400	1500	1600	1700	1800	1900	2000	2100	2200	2300	
54	**30**	**28**	**36**	**71**	**237**	**454**	**982**	**1008**	**911**	**919**	**1069**	**1247**	**1191**	**1212**	**1360**	**1474**	**1566**	**1195**	**916**	**700**	**653**	**284**	**168**	
22	5	1	9	7	44	92	186	283	215	226	250	**312**	298	298	302	391	**466**	335	273	210	188	95	67	34
12	8	2	5	12	44	102	256	209	229	198	284	**329**	324	274	314	368	**412**	296	243	170	202	74	39	21
10	12	18	8	23	56	109	242	277	244	240	247	**316**	279	331	383	**386**	374	305	203	161	137	61	35	16
11	5	7	14	29	95	152	298	240	224	255	**289**	291	290	310	361	**330**	315	259	197	159	127	54	27	14

AM Peak 1145 - 1245 (1245), AM PHF=0.95 PM Peak 1630 - 1730 (1592), PM PHF=0.85

* Wednesday, April 10, 2013=17953, 15 minute drops

0000	0100	0200	0300	0400	0500	0600	0700	0800	0900	1000	1100	1200	1300	1400	1500	1600	1700	1800	1900	2000	2100	2200	2300	
85	**36**	**57**	**36**	**65**	**222**	**435**	**955**	**1034**	**898**	**945**	**1061**	**1189**	**1205**	**1246**	**1440**	**1542**	**1580**	**1248**	**953**	**733**	**516**	**291**	**184**	
34	13	10	4	12	27	86	190	279	220	234	225	**296**	316	269	408	429	**476**	355	307	163	165	94	62	21
21	6	11	8	10	52	91	231	247	204	256	311	**320**	339	322	337	358	**393**	281	259	185	124	77	46	21
16	12	23	10	13	71	123	251	247	231	233	287	**302**	268	342	366	**410**	403	287	219	204	106	77	40	23
14	5	14	14	31	73	135	284	262	244	223	**239**	272	283	315	329	**346**	309	326	169	181	122	43	36	17

AM Peak 1145 - 1245 (1156), AM PHF=0.90 PM Peak 1630 - 1730 (1624), PM PHF=0.85

* Thursday, April 11, 2013=18320, 15 minute drops

0000	0100	0200	0300	0400	0500	0600	0700	0800	0900	1000	1100	1200	1300	1400	1500	1600	1700	1800	1900	2000	2100	2200	2300	
82	**53**	**49**	**38**	**79**	**200**	**451**	**1020**	**978**	**875**	**955**	**1066**	**1322**	**1194**	**1326**	**1402**	**1602**	**1616**	**1242**	**983**	**718**	**586**	**293**	**194**	
21	12	11	4	14	32	66	219	262	246	200	221	**316**	292	302	330	454	**457**	337	288	212	166	99	78	37
21	14	7	8	13	45	104	234	231	212	247	271	**338**	292	313	335	370	**370**	320	249	175	166	84	39	36
23	15	25	9	16	59	126	257	238	215	247	279	**354**	306	381	386	426	**433**	298	233	180	132	64	43	35
17	12	6	17	36	64	156	311	248	203	262	**296**	315	305	330	352	352	**358**	287	214	152	123	47	34	30

AM Peak 1145 - 1245 (1303), AM PHF=0.92 PM Peak 1700 - 1800 (1616), PM PHF=0.88

* Friday, April 12, 2013=19021, 15 minute drops

0000	0100	0200	0300	0400	0500	0600	0700	0800	0900	1000	1100	1200	1300	1400	1500	1600	1700	1800	1900	2000	2100	2200	2300	
138	**69**	**70**	**43**	**66**	**203**	**462**	**950**	**1069**	**948**	**1017**	**1217**	**1355**	**1331**	**1395**	**1492**	**1594**	**1617**	**1250**	**916**	**624**	**545**	**383**	**273**	
37	21	14	13	16	34	86	163	306	224	251	260	**350**	342	340	384	422	**447**	375	288	211	143	109	107	46
36	13	10	12	14	45	103	235	242	257	251	326	**370**	349	311	356	367	**432**	347	260	158	125	109	69	47
35	20	34	10	15	55	123	250	266	231	258	324	**340**	317	406	396	**456**	407	268	205	147	175	76	55	42
30	15	12	9	22	70	151	303	255	237	258	**308**	296	324	339	357	**350**	333	261	164	108	103	90	42	93

AM Peak 1145 - 1245 (1367), AM PHF=0.92 PM Peak 1630 - 1730 (1684), PM PHF=0.92

* Saturday, April 13, 2013=14562, 15 minute drops

0000	0100	0200	0300	0400	0500	0600	0700	0800	0900	1000	1100	1200	1300	1400	1500	1600	1700	1800	1900	2000	2100	2200	2300	
228	**171**	**117**	**57**	**70**	**109**	**197**	**354**	**612**	**794**	**939**	**1090**	**1204**	**1201**	**1141**	**1183**	**1145**	**1000**	**814**	**663**	**499**	**421**	**315**	**243**	
46	64	30	14	19	21	38	70	113	163	238	273	**296**	322	276	306	318	262	240	180	154	126	88	66	-
47	44	16	21	15	26	54	64	150	182	206	284	**303**	316	259	312	285	270	215	161	122	101	81	64	-
42	35	42	12	10	26	53	119	182	226	253	262	**318**	295	314	299	296	253	182	161	101	107	88	58	-
93	28	29	11	26	37	53	102	167	224	243	**272**	288	269	293	266	247	216	178	162	123	88	59	56	-

AM Peak 1145 - 1245 (1188), AM PHF=0.93

MetroCount Traffic Executive
Event Counts

2071 -- English (ENU)

Datasets:

Site:	**16.MORENA BLVD (WEST MORENA BLVD & KNOXVILLE ST) NORTHBOUND**
Input A:	3 - South bound. - Lane= 0, Excluded from totals.
Input B:	1 - North bound. - Lane= 0, Added to totals. (/2.000)
Survey Duration:	17:08 Monday, April 08, 2013 => 11:41 Monday, April 15, 2013
File:	091615Apr2013.EC0 (Base)
Data type:	Axle sensors - Split (Count)

Profile:

Filter time: **0:00 Tuesday, April 09, 2013 => 0:00 Sunday, April 14, 2013**

* Tuesday, April 09, 2013=4593, 15 minute drops

0000	0100	0200	0300	0400	0500	0600	0700	0800	0900	1000	1100	1200	1300	1400	1500	1600	1700	1800	1900	2000	2100	2200	2300	
20	**13**	**17**	**11**	**16**	**28**	**102**	**208**	**312**	**256**	**266**	**289**	**323**	**324**	**283**	**365**	**400**	**357**	**311**	**240**	**202**	**126**	**79**	**51**	
5	3	5	1	3	3	8	42	62	72	73	66	**74**	68	69	96	104	**107**	83	63	54	32	28	14	7
4	4	4	0	2	7	21	41	80	57	62	68	**80**	94	81	104	**97**	89	74	53	57	37	18	16	3
6	3	2	6	6	3	37	60	69	56	62	69	**83**	81	58	87	**105**	79	89	64	46	34	15	11	9
5	4	6	4	5	15	37	66	102	72	70	**87**	86	82	76	79	**95**	82	66	61	45	23	18	10	7

AM Peak 1145 - 1245 (323), AM PHF=0.93 PM Peak 1615 - 1715 (403), PM PHF=0.94

* Wednesday, April 10, 2013=4808, 15 minute drops

0000	0100	0200	0300	0400	0500	0600	0700	0800	0900	1000	1100	1200	1300	1400	1500	1600	1700	1800	1900	2000	2100	2200	2300	
26	**17**	**16**	**15**	**17**	**29**	**110**	**222**	**293**	**292**	**235**	**320**	**344**	**338**	**317**	**355**	**377**	**405**	**329**	**295**	**177**	**149**	**82**	**52**	
7	4	4	2	3	6	18	42	72	91	61	62	**75**	87	79	79	87	**99**	83	79	45	40	20	19	10
3	4	3	10	3	5	20	50	68	69	61	78	**97**	72	82	111	116	**102**	93	91	48	46	20	11	10
9	4	6	1	4	7	29	53	77	57	44	80	**85**	92	74	80	82	**101**	86	68	45	32	24	11	6
7	5	3	2	7	12	44	78	77	76	69	**102**	87	88	82	86	93	**104**	69	58	40	33	19	11	7

AM Peak 1145 - 1245 (359), AM PHF=0.88 PM Peak 1700 - 1800 (405), PM PHF=0.98

* Thursday, April 11, 2013=4792, 15 minute drops

0000	0100	0200	0300	0400	0500	0600	0700	0800	0900	1000	1100	1200	1300	1400	1500	1600	1700	1800	1900	2000	2100	2200	2300	
33	**22**	**21**	**6**	**11**	**39**	**91**	**231**	**330**	**261**	**250**	**313**	**359**	**357**	**331**	**353**	**385**	**369**	**313**	**279**	**146**	**140**	**103**	**55**	
10	9	5	1	1	4	16	41	78	68	64	65	**91**	73	83	89	**90**	82	85	71	35	39	29	23	12
10	4	3	2	4	7	13	55	96	64	61	81	**98**	99	80	96	**101**	100	73	72	37	28	26	13	14
6	6	5	2	1	11	25	71	65	62	67	**78**	74	86	80	73	**105**	97	73	56	29	34	26	8	11
7	3	8	1	6	17	37	64	92	69	59	**89**	97	100	90	**95**	89	90	82	80	45	39	22	11	9

AM Peak 1130 - 1230 (355), AM PHF=0.91 PM Peak 1545 - 1645 (391), PM PHF=0.93

* Friday, April 12, 2013=5083, 15 minute drops

0000	0100	0200	0300	0400	0500	0600	0700	0800	0900	1000	1100	1200	1300	1400	1500	1600	1700	1800	1900	2000	2100	2200	2300	
46	**22**	**16**	**18**	**11**	**55**	**102**	**233**	**300**	**269**	**288**	**355**	**368**	**242**	**358**	**398**	**429**	**431**	**315**	**269**	**198**	**152**	**120**	**95**	
12	8	5	6	1	7	17	51	90	64	88	82	**88**	79	88	110	112	**115**	90	75	68	37	29	30	12
14	8	4	7	3	18	23	48	73	70	72	94	**97**	0	73	103	108	**113**	76	66	52	46	28	34	14
11	3	4	2	4	16	26	46	58	56	60	90	**91**	65	96	100	**103**	102	76	65	52	39	32	15	11
9	3	3	3	4	14	36	88	80	79	69	**90**	93	98	102	85	**106**	101	74	64	27	31	32	16	10

AM Peak 1145 - 1245 (365), AM PHF=0.94 PM Peak 1630 - 1730 (437), PM PHF=0.95

* Saturday, April 13, 2013=4429, 15 minute drops

0000	0100	0200	0300	0400	0500	0600	0700	0800	0900	1000	1100	1200	1300	1400	1500	1600	1700	1800	1900	2000	2100	2200	2300	
47	**31**	**36**	**18**	**17**	**16**	**57**	**103**	**192**	**273**	**261**	**373**	**361**	**395**	**373**	**314**	**315**	**333**	**247**	**199**	**157**	**145**	**106**	**66**	
12	9	12	4	3	2	8	18	47	62	48	76	**93**	88	84	78	90	83	60	64	47	39	39	13	-
14	4	6	1	2	3	17	21	49	60	70	**94**	87	110	101	74	86	81	65	45	39	38	27	16	-
11	9	8	12	10	4	16	29	38	71	82	**98**	98	110	74	88	63	92	64	46	40	36	24	22	-
10	10	11	1	2	7	17	37	60	81	62	**106**	84	88	115	75	77	78	58	44	32	33	17	15	-

AM Peak 1115 - 1215 (390), AM PHF=0.92

MetroCount Traffic Executive
Event Counts

2070 -- English (ENU)

Datasets:

Site: **16.MORENA BLVD (WEST MORENA BLVD & KNOXVILLE ST) SOUTHBOUND**
Input A: 3 - South bound. - Lane= 0, Added to totals. (/2.000)
Input B: 1 - North bound. - Lane= 0, Subtracted from totals. (/-2.000)
Survey Duration: 17:08 Monday, April 08, 2013 => 11:41 Monday, April 15, 2013
File: 091615Apr2013.EC0 (Base)
Data type: Axle sensors - Split (Count)

Profile:
Filter time: **0:00 Tuesday, April 09, 2013 => 0:00 Sunday, April 14, 2013**

* Tuesday, April 09, 2013=3794, 15 minute drops

0000	0100	0200	0300	0400	0500	0600	0700	0800	0900	1000	1100	1200	1300	1400	1500	1600	1700	1800	1900	2000	2100	2200	2300	
15	**7**	**6**	**4**	**9**	**46**	**105**	**164**	**179**	**183**	**214**	**281**	**324**	**288**	**289**	**293**	**332**	**342**	**243**	**165**	**110**	**105**	**64**	**33**	
4	3	1	1	2	6	26	35	50	44	58	52	**68**	92	69	65	89	**84**	50	42	28	35	19	8	5
4	2	2	1	2	9	13	42	31	54	51	90	**69**	65	78	75	87	**115**	58	46	34	20	24	13	10
4	1	1	1	3	18	30	44	51	49	50	63	**91**	75	62	62	57	**76**	77	37	21	26	9	10	10
3	1	2	1	3	13	36	43	48	36	56	**76**	97	57	80	91	**99**	68	59	41	28	26	13	3	4

AM Peak 1145 - 1245 (303), AM PHF=0.84 PM Peak 1645 - 1745 (373), PM PHF=0.81

* Wednesday, April 10, 2013=4096, 15 minute drops

0000	0100	0200	0300	0400	0500	0600	0700	0800	0900	1000	1100	1200	1300	1400	1500	1600	1700	1800	1900	2000	2100	2200	2300	
28	**12**	**10**	**12**	**13**	**56**	**156**	**229**	**208**	**240**	**254**	**254**	**304**	**236**	**259**	**280**	**340**	**353**	**280**	**198**	**160**	**101**	**78**	**42**	
5	5	2	1	0	6	32	49	64	77	52	51	**79**	63	56	44	**102**	91	59	46	51	25	23	16	9
10	3	2	4	3	12	43	68	44	57	60	66	**76**	63	67	60	**77**	91	85	52	40	31	26	14	3
10	3	3	7	5	24	37	56	45	45	56	70	**81**	61	77	83	**88**	83	71	56	29	24	19	8	11
4	1	3	0	6	15	45	56	56	62	86	**67**	68	50	61	**94**	74	89	65	45	41	22	10	5	2

AM Peak 1145 - 1245 (303), AM PHF=0.93 PM Peak 1545 - 1645 (360), PM PHF=0.89

* Thursday, April 11, 2013=4127, 15 minute drops

0000	0100	0200	0300	0400	0500	0600	0700	0800	0900	1000	1100	1200	1300	1400	1500	1600	1700	1800	1900	2000	2100	2200	2300	
25	**7**	**7**	**9**	**18**	**50**	**138**	**214**	**246**	**268**	**275**	**339**	**242**	**315**	**253**	**335**	**304**	**322**	**253**	**184**	**123**	**94**	**75**	**38**	
9	2	3	5	2	3	41	41	72	69	78	**71**	59	**89**	64	84	81	76	67	51	30	35	26	6	20
3	1	1	2	4	12	35	67	65	78	60	**95**	58	**86**	65	75	74	83	50	38	36	20	19	18	11
11	2	3	1	7	10	35	48	63	69	66	**104**	51	**95**	49	103	72	84	75	53	29	21	15	11	9
2	2	0	1	5	26	28	58	47	53	**72**	70	**74**	46	76	74	78	81	61	43	29	19	17	4	2

AM Peak 1045 - 1145 (341), AM PHF=0.82 PM Peak 1245 - 1345 (344), PM PHF=0.91

* Friday, April 12, 2013=4088, 15 minute drops

0000	0100	0200	0300	0400	0500	0600	0700	0800	0900	1000	1100	1200	1300	1400	1500	1600	1700	1800	1900	2000	2100	2200	2300	
41	**21**	**22**	**9**	**21**	**76**	**126**	**221**	**250**	**281**	**276**	**281**	**331**	**258**	**428**	**509**	**498**	**223**	**135**	**61**	**10**	**5**	**5**	**4**	
20	4	8	1	1	9	26	53	63	67	61	67	**98**	84	118	123	**128**	83	21	34	4	3	3	3	1
11	4	9	2	9	13	31	54	62	86	73	76	**84**	0	107	120	**129**	68	48	10	3	0	1	0	1
9	9	3	3	8	35	32	55	73	66	78	70	**81**	55	116	118	**125**	51	38	11	0	1	2	0	1
2	5	2	3	4	20	38	60	52	63	65	**69**	69	119	88	**149**	117	22	29	7	3	2	0	2	1

AM Peak 1145 - 1245 (331), AM PHF=0.84 PM Peak 1545 - 1645 (530), PM PHF=0.89

* Saturday, April 13, 2013=1144, 15 minute drops

0000	0100	0200	0300	0400	0500	0600	0700	0800	0900	1000	1100	1200	1300	1400	1500	1600	1700	1800	1900	2000	2100	2200	2300	
4	**10**	**9**	**0**	**1**	**9**	**27**	**17**	**29**	**42**	**159**	**246**	**288**	**87**	**44**	**37**	**30**	**21**	**23**	**23**	**8**	**22**	**8**	**5**	
1	3	1	0	0	3	3	6	12	3	40	57	**88**	54	8	3	17	4	10	10	4	5	2	3	-
1	2	3	0	0	0	13	5	5	8	32	**60**	46	10	10	10	8	2	5	8	4	7	0	3	-
1	2	3	0	0	3	4	4	7	4	33	**74**	75	18	13	11	2	7	3	2	1	5	4	0	-
1	4	3	0	1	4	7	3	5	27	55	**56**	80	5	14	14	3	8	6	4	0	6	3	0	-

AM Peak 1115 - 1215 (277), AM PHF=0.79

MetroCount Traffic Executive
Event Counts

2072 -- English (ENU)

Datasets:

Site:	**17.MORENA BLVD (KNOXVILLE ST-TECOLOTE RD) NORTHBOUND**
Input A:	1 - North bound. - Lane= 0, Added to totals. (/2.000)
Input B:	0 - Unused or unknown. - Lane= 0, Excluded from totals.
Survey Duration:	16:47 Monday, April 08, 2013 => 11:12 Monday, April 15, 2013
File:	0917N15Apr2013.EC0 (Base)
Data type:	Axle sensors - Separate (Count)

Profile:

Filter time: **0:00 Tuesday, April 09, 2013 => 0:00 Sunday, April 14, 2013**

* Tuesday, April 09, 2013=8203, 15 minute drops

0000	0100	0200	0300	0400	0500	0600	0700	0800	0900	1000	1100	1200	1300	1400	1500	1600	1700	1800	1900	2000	2100	2200	2300	
30	**18**	**22**	**16**	**20**	**33**	**139**	**492**	**609**	**411**	**421**	**483**	**517**	**519**	**616**	**676**	**695**	**647**	**553**	**490**	**336**	**237**	**152**	**77**	
11	4	9	3	2	4	11	60	**124**	106	92	106	133	113	131	147	**184**	170	133	127	97	78	53	28	12
6	7	5	1	3	9	23	77	**130**	100	96	112	120	147	167	**199**	177	149	141	130	102	57	40	20	8
8	3	3	6	8	4	54	137	**141**	100	110	126	134	123	167	**172**	167	151	152	121	70	59	30	16	9
5	4	5	6	7	16	52	**220**	215	105	123	140	130	136	151	**159**	167	178	127	113	68	43	30	13	10

AM Peak 0745 - 0845 (614), AM PHF=0.70 PM Peak 1515 - 1615 (713), PM PHF=0.90

* Wednesday, April 10, 2013=8471, 15 minute drops

0000	0100	0200	0300	0400	0500	0600	0700	0800	0900	1000	1100	1200	1300	1400	1500	1600	1700	1800	1900	2000	2100	2200	2300	
39	**23**	**13**	**15**	**17**	**45**	**158**	**495**	**576**	**437**	**422**	**529**	**559**	**555**	**668**	**625**	**674**	**706**	**584**	**526**	**318**	**271**	**146**	**76**	
12	7	4	5	2	11	19	65	**131**	127	103	114	111	150	149	119	147	**172**	129	142	92	70	38	25	19
8	7	5	7	3	6	33	87	**110**	113	122	136	146	126	169	181	192	**174**	166	145	78	73	35	19	17
9	5	3	1	4	10	44	105	**167**	91	92	127	141	139	169	140	169	**192**	159	131	80	62	40	20	10
10	4	1	2	8	18	63	**239**	170	108	106	152	161	141	182	186	167	**169**	130	108	69	66	33	13	12

AM Peak 0745 - 0845 (645), AM PHF=0.68 PM Peak 1700 - 1800 (706), PM PHF=0.92

* Thursday, April 11, 2013=8324, 15 minute drops

0000	0100	0200	0300	0400	0500	0600	0700	0800	0900	1000	1100	1200	1300	1400	1500	1600	1700	1800	1900	2000	2100	2200	2300	
58	**26**	**20**	**9**	**16**	**47**	**137**	**485**	**575**	**419**	**439**	**495**	**539**	**564**	**659**	**666**	**667**	**675**	**555**	**479**	**301**	**234**	**174**	**90**	
19	12	7	3	2	6	24	70	**135**	115	101	107	136	138	139	151	**177**	167	155	127	82	58	48	32	15
17	6	2	1	4	8	20	77	**130**	91	98	122	146	134	152	146	**160**	174	124	137	68	64	47	24	18
10	7	4	4	4	10	39	141	**146**	98	132	132	113	148	194	**195**	167	190	146	91	76	51	34	16	15
12	1	7	1	6	23	54	**198**	165	116	109	135	144	145	174	**175**	164	145	131	124	75	61	45	19	15

AM Peak 0745 - 0845 (608), AM PHF=0.77 PM Peak 1530 - 1630 (706), PM PHF=0.91

* Friday, April 12, 2013=8832, 15 minute drops

0000	0100	0200	0300	0400	0500	0600	0700	0800	0900	1000	1100	1200	1300	1400	1500	1600	1700	1800	1900	2000	2100	2200	2300	
63	**31**	**23**	**20**	**18**	**56**	**158**	**487**	**545**	**432**	**463**	**535**	**567**	**566**	**751**	**729**	**743**	**719**	**550**	**447**	**329**	**247**	**200**	**160**	
15	12	7	6	1	7	22	78	**126**	113	132	138	134	130	137	**203**	181	167	157	128	100	67	50	53	27
18	9	7	5	8	15	32	69	**112**	120	110	141	142	143	**190**	185	191	200	140	107	88	69	52	44	19
15	4	5	4	6	17	41	124	**148**	100	97	130	137	126	**195**	175	182	175	139	102	85	62	53	27	16
15	6	4	5	3	17	63	**216**	160	100	124	126	155	167	**230**	166	190	177	114	111	56	50	45	36	21

AM Peak 0745 - 0845 (601), AM PHF=0.70 PM Peak 1415 - 1515 (817), PM PHF=0.89

* Saturday, April 13, 2013=7203, 15 minute drops

0000	0100	0200	0300	0400	0500	0600	0700	0800	0900	1000	1100	1200	1300	1400	1500	1600	1700	1800	1900	2000	2100	2200	2300	
83	**52**	**45**	**25**	**25**	**23**	**72**	**138**	**294**	**506**	**451**	**547**	**580**	**610**	**584**	**522**	**541**	**547**	**424**	**338**	**260**	**233**	**188**	**122**	
27	11	19	7	6	2	14	25	68	113	90	119	**146**	150	136	137	134	149	105	110	76	58	59	28	-
19	9	11	4	5	3	19	25	64	117	123	136	**142**	166	161	122	136	127	117	72	73	61	54	31	-
16	14	7	12	8	8	19	36	70	141	124	150	**161**	148	123	131	128	152	94	79	63	63	40	37	-
21	18	8	2	6	10	20	52	92	136	115	**142**	131	147	164	133	144	119	109	77	48	52	36	26	-

AM Peak 1145 - 1245 (591), AM PHF=0.92

MetroCount Traffic Executive
Event Counts

2073 -- English (ENU)

Datasets:

Site:	**17.MORENA BLVD (KNOXVILLE ST-TECOLOTE RD) SOUTHBOUND**
Input A:	3 - South bound. - Lane= 0, Added to totals. (/2.000)
Input B:	0 - Unused or unknown. - Lane= 0, Excluded from totals.
Survey Duration:	16:49 Monday, April 08, 2013 => 11:10 Monday, April 15, 2013
File:	0917S15Apr2013.EC0 (Plus)
Data type:	Axle sensors - Separate (Count)

Profile:

Filter time: **0:00 Tuesday, April 09, 2013 => 0:00 Sunday, April 14, 2013**

* Tuesday, April 09, 2013=8277, 15 minute drops

0000	0100	0200	0300	0400	0500	0600	0700	0800	0900	1000	1100	1200	1300	1400	1500	1600	1700	1800	1900	2000	2100	2200	2300	
18	**15**	**16**	**9**	**23**	**122**	**267**	**607**	**816**	**591**	**571**	**516**	**537**	**495**	**589**	**591**	**696**	**590**	**433**	**266**	**170**	**209**	**88**	**48**	
7	6	5	2	2	19	54	128	**296**	170	154	130	150	134	106	143	**210**	164	115	74	52	48	22	11	5
3	3	3	2	7	29	46	138	**142**	156	117	139	120	118	139	137	**155**	171	103	58	43	28	30	20	8
5	3	2	3	9	37	67	135	**201**	142	157	147	135	114	103	130	**156**	146	116	60	39	85	26	10	10
3	3	6	2	6	39	102	**207**	178	124	143	101	133	129	242	**182**	176	110	99	74	37	49	11	7	6

AM Peak 0745 - 0845 (845), AM PHF=0.71 PM Peak 1545 - 1645 (702), PM PHF=0.84

* Wednesday, April 10, 2013=8339, 15 minute drops

0000	0100	0200	0300	0400	0500	0600	0700	0800	0900	1000	1100	1200	1300	1400	1500	1600	1700	1800	1900	2000	2100	2200	2300	
29	**18**	**12**	**14**	**28**	**111**	**257**	**665**	**833**	**564**	**480**	**528**	**512**	**562**	**560**	**648**	**668**	**609**	**415**	**312**	**237**	**146**	**86**	**51**	
5	5	1	2	2	15	47	137	**274**	190	120	124	159	171	99	190	**194**	173	102	68	77	47	30	15	8
8	4	3	3	9	30	62	146	**170**	130	131	126	110	146	136	126	**171**	161	118	84	63	43	26	17	6
10	8	3	7	8	33	66	171	**172**	125	127	139	131	133	120	142	**171**	147	110	71	44	28	20	13	10
6	1	5	2	9	34	82	212	**217**	119	102	140	114	113	206	**191**	133	129	87	90	53	29	11	7	5

AM Peak 0800 - 0900 (833), AM PHF=0.76 PM Peak 1545 - 1645 (726), PM PHF=0.93

* Thursday, April 11, 2013=8037, 15 minute drops

0000	0100	0200	0300	0400	0500	0600	0700	0800	0900	1000	1100	1200	1300	1400	1500	1600	1700	1800	1900	2000	2100	2200	2300	
28	**12**	**12**	**11**	**33**	**95**	**254**	**596**	**777**	**560**	**460**	**512**	**497**	**484**	**571**	**678**	**655**	**592**	**464**	**263**	**186**	**151**	**92**	**59**	
8	4	4	3	3	15	63	116	**272**	160	121	125	140	121	121	198	**220**	156	136	71	53	42	25	17	16
6	1	3	3	7	23	49	126	**164**	125	106	121	122	133	117	125	**156**	148	102	61	38	38	28	19	11
10	4	5	1	8	21	71	146	**182**	144	102	145	116	137	102	**177**	149	143	131	80	54	40	20	10	12
5	3	0	4	15	36	71	**209**	160	132	133	123	120	95	231	**179**	130	145	95	52	41	31	19	13	4

AM Peak 0745 - 0845 (826), AM PHF=0.76 PM Peak 1530 - 1630 (732), PM PHF=0.83

* Friday, April 12, 2013=8637, 15 minute drops

0000	0100	0200	0300	0400	0500	0600	0700	0800	0900	1000	1100	1200	1300	1400	1500	1600	1700	1800	1900	2000	2100	2200	2300	
43	**15**	**14**	**12**	**41**	**110**	**230**	**596**	**688**	**601**	**501**	**524**	**540**	**543**	**608**	**726**	**786**	**626**	**459**	**320**	**239**	**194**	**122**	**105**	
16	2	3	1	1	15	45	109	**209**	158	116	130	142	150	123	212	**244**	177	129	87	61	52	45	35	13
11	4	7	3	8	21	52	110	**159**	150	133	113	110	133	138	160	**201**	170	113	85	52	46	29	30	16
12	6	3	2	15	41	59	**161**	153	177	128	146	171	134	137	151	**156**	149	115	81	66	47	32	25	17
4	4	1	6	18	34	75	**217**	168	117	125	135	118	127	211	**204**	186	130	102	67	60	49	16	15	14

AM Peak 0730 - 0830 (745), AM PHF=0.86 PM Peak 1545 - 1645 (804), PM PHF=0.83

* Saturday, April 13, 2013=6845, 15 minute drops

0000	0100	0200	0300	0400	0500	0600	0700	0800	0900	1000	1100	1200	1300	1400	1500	1600	1700	1800	1900	2000	2100	2200	2300	
60	**48**	**28**	**23**	**26**	**52**	**115**	**256**	**386**	**453**	**583**	**738**	**556**	**496**	**524**	**486**	**454**	**379**	**375**	**272**	**180**	**160**	**105**	**96**	
13	11	7	7	5	9	22	43	86	94	130	**197**	157	129	106	106	125	88	104	68	39	47	37	32	-
16	13	9	6	4	10	31	79	86	113	136	**224**	131	107	138	121	117	77	105	70	61	41	24	31	-
17	15	5	5	5	14	26	65	92	125	164	**169**	135	123	131	130	98	119	86	69	50	32	27	15	-
14	9	7	5	12	19	37	69	123	121	**154**	149	134	137	149	129	114	95	81	65	31	41	18	18	-

AM Peak 1045 - 1145 (744), AM PHF=0.83

MetroCount Traffic Executive
Event Counts

2074 -- English (ENU)

Datasets:

Site:	**18.MORENA BLVD (TECOLOTE RD - BUENOS AVE) NORTHBOUND**
Input A:	1 - North bound. - Lane= 0, Added to totals. (/2.000)
Input B:	0 - Unused or unknown. - Lane= 0, Excluded from totals.
Survey Duration:	16:24 Monday, April 08, 2013 => 11:33 Monday, April 15, 2013
File:	0918N15Apr2013.EC0 (Base)
Data type:	Axle sensors - Separate (Count)

Profile:

Filter time: **0:00 Tuesday, April 09, 2013 => 0:00 Sunday, April 14, 2013**

* Tuesday, April 09, 2013=7879, 15 minute drops

0000	0100	0200	0300	0400	0500	0600	0700	0800	0900	1000	1100	1200	1300	1400	1500	1600	1700	1800	1900	2000	2100	2200	2300	
26	**8**	**13**	**8**	**21**	**55**	**192**	**556**	**559**	**447**	**439**	**460**	**542**	**532**	**533**	**589**	**555**	**602**	**456**	**426**	**389**	**300**	**113**	**64**	
8	3	4	1	4	9	25	85	**132**	103	95	98	133	127	121	136	**152**	159	118	128	95	78	44	31	7
9	3	3	3	3	15	34	110	**139**	130	117	108	164	146	122	**169**	125	153	117	105	114	92	28	14	9
3	0	3	2	7	14	73	**165**	158	108	112	114	137	128	141	**137**	146	145	126	101	98	79	27	10	5
6	2	3	2	7	17	60	**197**	130	107	115	140	109	132	151	**148**	133	146	95	93	83	51	15	9	6

AM Peak 0730 - 0830 (633), AM PHF=0.80 PM Peak 1515 - 1615 (605), PM PHF=0.90

* Wednesday, April 10, 2013=7446, 15 minute drops

0000	0100	0200	0300	0400	0500	0600	0700	0800	0900	1000	1100	1200	1300	1400	1500	1600	1700	1800	1900	2000	2100	2200	2300	
27	**19**	**13**	**16**	**20**	**56**	**199**	**551**	**578**	**491**	**422**	**472**	**541**	**16**	**555**	**565**	**485**	**662**	**526**	**446**	**335**	**264**	**126**	**67**	
7	7	6	2	3	9	27	93	**151**	116	110	119	118	0	142	131	168	**167**	121	155	79	76	35	19	6
9	8	2	10	4	12	46	119	**126**	130	107	109	146	0	139	146	89	**172**	138	116	75	63	35	17	9
5	2	4	3	6	16	59	**155**	150	134	112	128	148	0	144	140	98	**174**	153	103	83	51	29	19	3
6	2	1	1	7	19	67	**185**	151	111	94	117	130	16	131	148	131	**149**	115	73	98	74	27	12	3

AM Peak 0730 - 0830 (616), AM PHF=0.83 PM Peak 1700 - 1800 (662), PM PHF=0.95

* Thursday, April 11, 2013=8210, 15 minute drops

0000	0100	0200	0300	0400	0500	0600	0700	0800	0900	1000	1100	1200	1300	1400	1500	1600	1700	1800	1900	2000	2100	2200	2300	
21	**14**	**14**	**12**	**10**	**71**	**196**	**549**	**600**	**460**	**428**	**540**	**600**	**523**	**607**	**576**	**664**	**658**	**501**	**424**	**330**	**216**	**120**	**82**	
6	4	3	4	2	9	30	108	**155**	136	108	127	161	142	161	138	184	**172**	122	133	106	58	37	29	13
9	3	4	2	3	11	45	109	**131**	112	104	114	161	122	147	138	169	**156**	112	109	83	63	38	19	11
3	4	5	3	1	21	63	153	**157**	98	103	145	142	135	154	157	169	**199**	133	78	54	48	21	20	10
3	3	2	3	4	31	58	**181**	157	115	114	154	137	125	145	143	**143**	131	134	105	88	48	24	14	12

AM Peak 0745 - 0845 (624), AM PHF=0.86 PM Peak 1645 - 1745 (669), PM PHF=0.84

* Friday, April 12, 2013=8417, 15 minute drops

0000	0100	0200	0300	0400	0500	0600	0700	0800	0900	1000	1100	1200	1300	1400	1500	1600	1700	1800	1900	2000	2100	2200	2300	
46	**25**	**13**	**19**	**13**	**59**	**194**	**521**	**562**	**436**	**484**	**545**	**636**	**575**	**709**	**619**	**611**	**622**	**519**	**400**	**289**	**228**	**172**	**124**	
13	6	4	4	1	13	27	82	137	127	134	124	**150**	139	**162**	147	150	181	143	120	72	53	56	35	21
11	7	4	2	3	6	48	112	141	121	112	151	**173**	149	**184**	169	142	175	129	114	83	62	42	39	15
10	6	3	9	4	18	55	161	133	96	128	136	**163**	144	**177**	153	163	127	141	79	81	64	37	28	14
12	6	2	4	5	22	64	166	152	92	110	**135**	151	143	**186**	151	158	140	107	88	54	50	38	23	39

AM Peak 1145 - 1245 (620), AM PHF=0.90 PM Peak 1400 - 1500 (709), PM PHF=0.95

* Saturday, April 13, 2013=6579, 15 minute drops

0000	0100	0200	0300	0400	0500	0600	0700	0800	0900	1000	1100	1200	1300	1400	1500	1600	1700	1800	1900	2000	2100	2200	2300	
88	**61**	**41**	**20**	**15**	**22**	**96**	**163**	**279**	**404**	**405**	**527**	**566**	**577**	**538**	**557**	**495**	**325**	**369**	**304**	**228**	**243**	**165**	**97**	
21	15	13	6	4	2	20	31	82	88	96	115	**132**	131	128	148	121	103	117	81	53	83	51	21	-
15	16	5	4	2	3	19	33	54	112	99	135	**136**	151	143	141	117	97	100	77	51	54	43	18	-
14	11	9	6	3	9	32	46	64	103	103	135	**159**	144	124	145	130	88	78	81	57	52	35	34	-
39	19	14	4	6	8	25	53	79	101	108	**143**	139	152	144	124	128	38	75	66	67	54	37	24	-

AM Peak 1145 - 1245 (569), AM PHF=0.90

MetroCount Traffic Executive
Event Counts

2075 -- English (ENU)

Datasets:

Site:	**18.MORENA BLVD (TECOLOTE RD - BUENOS AVE) SOUTHBOUND**
Input A:	3 - South bound. - Lane= 0, Added to totals. (/2.000)
Input B:	0 - Unused or unknown. - Lane= 0, Excluded from totals.
Survey Duration:	16:25 Monday, April 08, 2013 => 11:30 Monday, April 15, 2013
File:	0918S15Apr2013.EC0 (Regular)
Data type:	Axle sensors - Separate (Count)

Profile:

Filter time: **0:00 Tuesday, April 09, 2013 => 0:00 Sunday, April 14, 2013**

* Tuesday, April 09, 2013=7095, 15 minute drops

0000	0100	0200	0300	0400	0500	0600	0700	0800	0900	1000	1100	1200	1300	1400	1500	1600	1700	1800	1900	2000	2100	2200	2300	
25	**19**	**15**	**5**	**17**	**60**	**157**	**352**	**436**	**485**	**461**	**472**	**559**	**537**	**527**	**588**	**609**	**597**	**433**	**271**	**174**	**145**	**97**	**60**	
10	3	8	1	2	15	26	64	98	137	112	127	**167**	152	119	139	153	**162**	121	57	48	44	44	17	11
4	3	1	1	2	14	36	77	96	109	116	118	**125**	112	135	133	134	**161**	99	77	39	34	21	16	8
7	10	4	0	2	12	47	108	113	134	113	89	**140**	135	150	164	137	**138**	96	73	53	35	14	12	13
5	3	2	3	11	20	49	104	130	106	121	**139**	128	139	124	153	**185**	137	118	64	34	32	18	16	15

AM Peak 1145 - 1245 (569), AM PHF=0.85 PM Peak 1645 - 1745 (645), PM PHF=0.87

* Wednesday, April 10, 2013=7385, 15 minute drops

0000	0100	0200	0300	0400	0500	0600	0700	0800	0900	1000	1100	1200	1300	1400	1500	1600	1700	1800	1900	2000	2100	2200	2300	
46	**25**	**22**	**7**	**10**	**52**	**159**	**345**	**472**	**473**	**489**	**505**	**556**	**560**	**546**	**543**	**655**	**639**	**462**	**307**	**260**	**131**	**76**	**51**	
11	5	8	1	0	11	19	53	97	120	106	127	**147**	143	138	121	167	**159**	105	85	72	37	20	16	17
8	3	5	0	3	7	38	87	102	110	129	118	**131**	120	121	134	155	**183**	129	88	77	39	29	15	9
13	13	6	3	4	14	53	103	127	117	122	119	**142**	163	149	142	**171**	156	123	73	54	28	12	12	12
15	4	3	3	3	21	49	103	147	128	133	**142**	137	136	139	147	**163**	142	105	62	58	27	15	8	3

AM Peak 1145 - 1245 (561), AM PHF=0.96 PM Peak 1630 - 1730 (675), PM PHF=0.92

* Thursday, April 11, 2013=7388, 15 minute drops

0000	0100	0200	0300	0400	0500	0600	0700	0800	0900	1000	1100	1200	1300	1400	1500	1600	1700	1800	1900	2000	2100	2200	2300	
41	**25**	**15**	**9**	**19**	**52**	**157**	**331**	**465**	**423**	**499**	**497**	**549**	**535**	**523**	**557**	**644**	**626**	**490**	**398**	**234**	**161**	**95**	**49**	
17	5	5	0	0	9	30	60	97	118	114	117	**147**	116	131	115	153	**186**	128	86	66	41	29	7	9
9	7	6	3	9	13	38	73	101	106	127	124	**143**	135	121	133	**163**	161	133	113	66	46	26	17	8
12	11	3	1	1	17	39	89	119	95	135	**133**	126	155	131	173	**160**	141	130	108	63	39	15	17	17
3	2	1	5	10	13	50	109	148	105	124	**124**	133	130	141	137	**170**	138	100	92	40	35	25	9	8

AM Peak 1130 - 1230 (547), AM PHF=0.93 PM Peak 1615 - 1715 (678), PM PHF=0.91

* Friday, April 12, 2013=7603, 15 minute drops

0000	0100	0200	0300	0400	0500	0600	0700	0800	0900	1000	1100	1200	1300	1400	1500	1600	1700	1800	1900	2000	2100	2200	2300	
42	**33**	**30**	**16**	**20**	**54**	**140**	**354**	**455**	**462**	**480**	**540**	**582**	**471**	**540**	**601**	**696**	**612**	**462**	**346**	**248**	**215**	**125**	**82**	
9	5	6	2	2	8	25	49	119	106	112	141	**158**	84	123	154	**203**	175	119	108	62	66	34	26	24
8	11	15	7	2	11	34	81	94	120	100	142	**143**	131	140	138	**159**	177	148	89	65	58	34	22	19
17	12	6	5	4	19	38	108	97	116	124	115	**145**	139	143	144	**173**	133	101	80	68	42	31	20	14
8	5	4	2	12	17	44	118	146	120	145	**144**	136	118	135	**165**	161	127	95	70	53	49	26	15	17

AM Peak 1145 - 1245 (589), AM PHF=0.93 PM Peak 1545 - 1645 (700), PM PHF=0.86

* Saturday, April 13, 2013=5984, 15 minute drops

0000	0100	0200	0300	0400	0500	0600	0700	0800	0900	1000	1100	1200	1300	1400	1500	1600	1700	1800	1900	2000	2100	2200	2300	
73	**64**	**39**	**25**	**12**	**21**	**72**	**141**	**307**	**370**	**452**	**510**	**493**	**479**	**444**	**439**	**503**	**396**	**333**	**269**	**181**	**156**	**113**	**99**	
24	23	11	4	4	5	15	22	56	91	109	**119**	114	143	115	109	132	95	88	67	36	37	48	27	-
19	13	12	9	1	4	14	20	60	93	103	**146**	128	116	94	107	129	99	105	66	52	38	24	30	-
14	16	8	9	1	6	17	43	83	94	105	**113**	115	117	111	113	135	104	65	67	46	39	18	18	-
17	12	8	4	6	7	26	56	108	92	**136**	134	136	104	124	110	108	99	76	69	47	43	23	24	-

AM Peak 1045 - 1145 (513), AM PHF=0.88

MetroCount Traffic Executive
Event Counts

2076 -- English (ENU)

Datasets:

Site:	**19.MORENA BLVD (BUENOS AVE - MORENA BLVD SOUTH SPLIT) NORTHBOUND**
Input A:	1 - North bound. - Lane= 0, Added to totals. (/2.000)
Input B:	3 - South bound. - Lane= 0, Excluded from totals.
Survey Duration:	16:06 Monday, April 08, 2013 => 12:03 Monday, April 15, 2013
File:	091915Apr2013.INCOMPLETE.EC0 (Regular)
Data type:	Axle sensors - Separate (Count)

Profile:

Filter time:	**0:00 Tuesday, April 09, 2013 => 0:00 Friday, April 12, 2013**

*** Tuesday, April 09, 2013=7991, 15 minute drops**

0000	0100	0200	0300	0400	0500	0600	0700	0800	0900	1000	1100	1200	1300	1400	1500	1600	1700	1800	1900	2000	2100	2200	2300	
28	**9**	**13**	**8**	**21**	**67**	**199**	**554**	**624**	**483**	**411**	**438**	**540**	**515**	**547**	**629**	**549**	**593**	**456**	**447**	**370**	**307**	**124**	**65**	
12	4	5	1	3	8	22	87	**135**	124	93	105	123	121	118	143	**153**	137	121	129	107	74	51	29	6
7	3	4	3	2	16	36	101	**147**	119	107	99	160	151	123	**166**	118	164	113	127	110	91	37	10	9
3	0	1	1	9	18	75	162	**184**	129	101	104	134	131	147	**163**	149	152	126	103	72	86	23	10	6
6	2	3	3	7	25	67	**206**	159	112	110	132	123	113	160	**158**	129	141	96	89	82	57	13	16	8

AM Peak 0745 - 0845 (671), AM PHF=0.82 PM Peak 1515 - 1615 (639), PM PHF=0.96

*** Wednesday, April 10, 2013=8455, 15 minute drops**

0000	0100	0200	0300	0400	0500	0600	0700	0800	0900	1000	1100	1200	1300	1400	1500	1600	1700	1800	1900	2000	2100	2200	2300	
29	**20**	**14**	**9**	**26**	**63**	**204**	**605**	**686**	**559**	**418**	**520**	**578**	**545**	**562**	**579**	**637**	**659**	**522**	**433**	**334**	**264**	**130**	**63**	
6	6	7	1	4	8	30	109	**181**	149	118	125	131	122	151	131	**170**	151	126	164	80	71	36	19	7
9	7	4	6	5	13	47	117	**151**	142	112	127	141	140	136	134	**169**	161	124	107	81	69	32	17	9
6	3	3	1	9	18	53	160	**178**	139	92	141	165	139	156	154	**163**	196	138	87	82	57	35	13	4
8	4	0	1	8	24	74	**220**	177	131	97	128	142	144	120	**160**	136	152	135	76	91	68	28	15	2

AM Peak 0745 - 0845 (730), AM PHF=0.83 PM Peak 1545 - 1645 (662), PM PHF=0.97

*** Thursday, April 11, 2013=8387, 15 minute drops**

0000	0100	0200	0300	0400	0500	0600	0700	0800	0900	1000	1100	1200	1300	1400	1500	1600	1700	1800	1900	2000	2100	2200	2300	
22	**14**	**18**	**10**	**18**	**83**	**205**	**570**	**635**	**492**	**448**	**559**	**623**	**534**	**624**	**589**	**642**	**680**	**475**	**404**	**314**	**225**	**116**	**91**	
7	4	5	3	2	13	29	106	**152**	142	108	125	150	134	170	145	170	168	128	109	110	64	36	27	-
9	4	7	2	5	15	44	103	**142**	114	114	133	169	122	159	145	154	166	104	108	81	68	32	27	-
4	4	5	3	3	23	64	**170**	170	106	106	136	152	157	151	156	164	202	110	86	54	46	22	26	-
2	2	1	2	8	32	68	**192**	172	130	121	165	153	122	145	143	154	146	133	102	70	48	26	12	-

AM Peak 0730 - 0830 (656), AM PHF=0.85

MetroCount Traffic Executive
Event Counts

2077 -- English (ENU)

Datasets:

Site:	**19.MORENA BLVD (BUENOS AVE - MORENA BLVD SOUTH SPLIT) SOUTHBOUND**
Input A:	1 - North bound. - Lane= 0, Excluded from totals.
Input B:	3 - South bound. - Lane= 0, Added to totals. (/2.000)
Survey Duration:	16:06 Monday, April 08, 2013 => 12:03 Monday, April 15, 2013
File:	091915Apr2013.INCOMPLETE.EC0 (Regular)
Data type:	Axle sensors - Separate (Count)

Profile:

Filter time:	**0:00 Tuesday, April 09, 2013 => 0:00 Friday, April 12, 2013**

*** Tuesday, April 09, 2013=7622, 15 minute drops**

0000	0100	0200	0300	0400	0500	0600	0700	0800	0900	1000	1100	1200	1300	1400	1500	1600	1700	1800	1900	2000	2100	2200	2300	
25	**18**	**16**	**9**	**15**	**54**	**166**	**368**	**469**	**441**	**471**	**526**	**577**	**594**	**581**	**543**	**714**	**673**	**481**	**325**	**210**	**175**	**115**	**62**	
5	3	5	4	2	12	24	56	116	111	103	168	**167**	172	128	147	178	**206**	140	94	70	50	46	19	13
5	2	1	2	2	13	41	82	104	99	118	114	**158**	110	181	122	165	**175**	110	84	46	38	25	16	11
7	9	8	0	3	8	48	123	110	125	121	102	**142**	152	151	148	**183**	137	107	74	49	49	24	12	12
8	4	2	3	8	21	54	108	139	106	130	**142**	111	162	122	126	**189**	155	124	74	45	38	21	15	13

AM Peak 1145 - 1245 (608), AM PHF=0.91 PM Peak 1630 - 1730 (752), PM PHF=0.91

*** Wednesday, April 10, 2013=8148, 15 minute drops**

0000	0100	0200	0300	0400	0500	0600	0700	0800	0900	1000	1100	1200	1300	1400	1500	1600	1700	1800	1900	2000	2100	2200	2300	
49	**22**	**19**	**8**	**12**	**59**	**161**	**371**	**497**	**479**	**486**	**621**	**672**	**677**	**560**	**597**	**704**	**723**	**500**	**324**	**303**	**160**	**94**	**56**	
13	5	3	1	2	11	22	68	116	111	102	172	**194**	171	140	140	181	**228**	122	106	82	48	29	18	11
11	1	1	0	2	11	36	90	110	90	115	136	**175**	146	129	139	167	**189**	134	79	88	44	34	14	10
12	11	11	3	4	14	44	105	112	144	124	**138**	134	157	150	163	**178**	153	118	84	64	34	13	13	13
13	5	4	4	4	23	59	108	159	135	146	**176**	170	203	142	156	**178**	154	127	55	69	34	18	11	3

AM Peak 1130 - 1230 (682), AM PHF=0.88 PM Peak 1630 - 1730 (773), PM PHF=0.85

*** Thursday, April 11, 2013=7870, 15 minute drops**

0000	0100	0200	0300	0400	0500	0600	0700	0800	0900	1000	1100	1200	1300	1400	1500	1600	1700	1800	1900	2000	2100	2200	2300	
37	**25**	**16**	**9**	**17**	**50**	**160**	**342**	**500**	**414**	**475**	**530**	**563**	**585**	**543**	**595**	**705**	**748**	**502**	**427**	**262**	**190**	**114**	**65**	
11	7	2	1	3	11	25	64	103	115	115	117	**149**	140	136	124	178	233	145	92	76	50	39	16	-
10	8	5	4	4	11	38	81	120	102	124	**146**	127	144	145	141	184	214	134	115	76	53	35	20	-
13	8	6	2	2	13	35	98	135	90	122	**135**	139	147	121	189	184	157	126	115	55	48	20	16	-
3	2	3	2	8	15	62	100	142	108	114	**132**	149	155	142	142	160	145	98	105	55	40	21	13	-

AM Peak 1115 - 1215 (562), AM PHF=0.94

MetroCount Traffic Executive
Event Counts

2078 -- English (ENU)

Datasets:

Site:	**20.NAPA ST (MORENA BLVD - LINDA VISTA RD) NORTHBOUND**
Input A:	1 - North bound. - Lane= 0, Added to totals. (/2.000)
Input B:	3 - South bound. - Lane= 0, Subtracted from totals. (/-2.000)
Survey Duration:	14:16 Monday, April 08, 2013 => 12:07 Monday, April 15, 2013
File:	092015Apr2013.EC0 (Regular)
Data type:	Axle sensors - Split (Count)

Profile:

Filter time: **0:00 Tuesday, April 09, 2013 => 0:00 Sunday, April 14, 2013**

* Tuesday, April 09, 2013=14650, 15 minute drops

0000	0100	0200	0300	0400	0500	0600	0700	0800	0900	1000	1100	1200	1300	1400	1500	1600	1700	1800	1900	2000	2100	2200	2300	
43	**22**	**13**	**17**	**29**	**117**	**331**	**907**	**1062**	**821**	**740**	**817**	**961**	**922**	**989**	**1135**	**1249**	**1372**	**951**	**792**	**590**	**466**	**205**	**104**	
10	2	3	5	4	21	42	140	**277**	236	156	167	246	223	204	276	342	**338**	257	223	170	125	77	42	11
12	6	2	6	4	21	60	183	**238**	208	227	215	281	227	268	284	296	**362**	250	212	160	137	44	24	16
10	8	5	2	11	33	100	251	**300**	202	186	186	219	262	276	308	299	**368**	233	190	130	109	45	19	14
13	7	3	4	10	42	131	**333**	247	176	172	250	216	210	242	268	**313**	305	211	168	131	96	41	20	18

AM Peak 0745 - 0845 (1148), AM PHF=0.86 PM Peak 1645 - 1745 (1381), PM PHF=0.94

* Wednesday, April 10, 2013=14926, 15 minute drops

0000	0100	0200	0300	0400	0500	0600	0700	0800	0900	1000	1100	1200	1300	1400	1500	1600	1700	1800	1900	2000	2100	2200	2300	
58	**31**	**27**	**16**	**37**	**112**	**318**	**1064**	**1116**	**807**	**696**	**882**	**978**	**923**	**968**	**1103**	**1260**	**1355**	**1000**	**795**	**591**	**438**	**220**	**135**	
11	6	10	1	2	16	38	158	**331**	231	171	206	221	240	240	252	323	**318**	236	274	149	153	75	48	19
16	13	7	5	8	29	64	**249**	249	172	206	199	266	264	238	278	311	**382**	275	201	146	94	77	31	13
14	7	8	5	12	28	88	**277**	269	201	164	240	258	187	252	286	313	**380**	246	181	148	103	31	33	10
18	6	2	5	15	40	128	**380**	268	205	155	238	235	234	239	288	**314**	276	244	140	149	89	38	23	7

AM Peak 0715 - 0815 (1237), AM PHF=0.81 PM Peak 1645 - 1745 (1393), PM PHF=0.91

* Thursday, April 11, 2013=15170, 15 minute drops

0000	0100	0200	0300	0400	0500	0600	0700	0800	0900	1000	1100	1200	1300	1400	1500	1600	1700	1800	1900	2000	2100	2200	2300	
49	**43**	**22**	**18**	**34**	**116**	**310**	**971**	**1011**	**735**	**818**	**849**	**1094**	**1027**	**1100**	**1108**	**1380**	**1362**	**944**	**824**	**571**	**427**	**216**	**148**	
19	10	4	3	2	21	39	173	**236**	194	217	192	291	275	257	294	329	**332**	260	229	180	101	57	37	34
13	13	7	8	9	17	68	162	**253**	203	192	180	268	240	310	245	353	**369**	230	221	152	141	65	40	25
10	12	6	3	6	32	90	**304**	271	147	199	228	261	264	274	298	**389**	363	214	201	119	92	57	43	17
7	9	6	4	17	47	114	**333**	251	192	210	250	276	249	259	272	**310**	299	240	174	121	94	38	29	20

AM Peak 0730 - 0830 (1125), AM PHF=0.84 PM Peak 1630 - 1730 (1399), PM PHF=0.90

* Friday, April 12, 2013=15611, 15 minute drops

0000	0100	0200	0300	0400	0500	0600	0700	0800	0900	1000	1100	1200	1300	1400	1500	1600	1700	1800	1900	2000	2100	2200	2300	
95	**54**	**32**	**29**	**35**	**115**	**297**	**942**	**1032**	**754**	**847**	**925**	**1183**	**1050**	**1159**	**1199**	**1376**	**1360**	**996**	**690**	**534**	**437**	**277**	**197**	
34	13	11	5	8	18	41	157	272	193	205	227	**299**	282	272	284	342	**382**	263	198	134	101	77	65	40
25	8	11	8	10	16	67	164	220	179	189	243	**335**	288	292	315	356	**390**	299	176	154	121	67	53	31
17	19	5	11	8	31	74	263	245	190	239	234	**268**	256	278	310	**383**	313	256	145	149	117	68	42	31
20	15	6	5	10	50	115	359	296	193	215	**222**	282	225	318	290	**296**	275	179	172	97	99	65	37	34

AM Peak 1145 - 1245 (1123), AM PHF=0.84 PM Peak 1630 - 1730 (1451), PM PHF=0.93

* Saturday, April 13, 2013=12004, 15 minute drops

0000	0100	0200	0300	0400	0500	0600	0700	0800	0900	1000	1100	1200	1300	1400	1500	1600	1700	1800	1900	2000	2100	2200	2300	
135	**106**	**82**	**42**	**47**	**35**	**141**	**280**	**595**	**716**	**769**	**886**	**1019**	**939**	**954**	**905**	**974**	**869**	**746**	**541**	**396**	**393**	**264**	**175**	
40	22	27	13	9	6	40	50	133	171	206	216	**236**	245	240	249	264	194	212	135	118	101	86	52	-
31	26	20	13	6	3	25	45	123	190	161	222	**229**	250	248	241	242	237	190	144	82	102	62	48	-
31	24	16	8	13	14	36	83	155	160	200	221	**281**	203	222	222	214	258	196	154	93	95	57	40	-
34	35	19	9	19	13	41	102	184	195	203	**228**	274	242	244	194	254	181	149	108	105	96	60	36	-

AM Peak 1145 - 1245 (974), AM PHF=0.87

MetroCount Traffic Executive
Event Counts

2079 -- English (ENU)

Datasets:

Site:	**20.NAPA ST (MORENA BLVD - LINDA VISTA RD) SOUTHBOUND**
Input A:	1 - North bound. - Lane= 0, Excluded from totals.
Input B:	3 - South bound. - Lane= 0, Added to totals. (/2.000)
Survey Duration:	14:16 Monday, April 08, 2013 => 12:07 Monday, April 15, 2013
File:	092015Apr2013.EC0 (Regular)
Data type:	Axle sensors - Split (Count)

Profile:

Filter time: **0:00 Tuesday, April 09, 2013 => 0:00 Sunday, April 14, 2013**

* Tuesday, April 09, 2013=8889, 15 minute drops

0000	0100	0200	0300	0400	0500	0600	0700	0800	0900	1000	1100	1200	1300	1400	1500	1600	1700	1800	1900	2000	2100	2200	2300	
34	**21**	**13**	**11**	**17**	**64**	**177**	**436**	**553**	**482**	**505**	**546**	**744**	**606**	**590**	**547**	**870**	**869**	**703**	**411**	**267**	**239**	**128**	**62**	
7	1	2	6	1	14	22	66	123	152	102	125	**228**	145	128	138	232	**185**	185	107	74	75	48	25	14
9	3	4	3	3	13	33	99	106	113	148	150	**223**	159	158	127	156	**237**	179	106	67	53	25	19	8
8	9	5	0	6	16	54	145	147	111	128	131	**159**	169	168	165	209	**248**	173	96	59	52	29	11	13
10	8	2	2	7	21	69	127	179	106	127	**140**	135	134	136	118	**274**	200	166	103	67	60	28	8	18

AM Peak 1145 - 1245 (750), AM PHF=0.82 PM Peak 1645 - 1745 (943), PM PHF=0.86

* Wednesday, April 10, 2013=8977, 15 minute drops

0000	0100	0200	0300	0400	0500	0600	0700	0800	0900	1000	1100	1200	1300	1400	1500	1600	1700	1800	1900	2000	2100	2200	2300	
51	**37**	**22**	**9**	**16**	**56**	**162**	**454**	**492**	**528**	**466**	**628**	**680**	**626**	**571**	**645**	**796**	**926**	**632**	**400**	**351**	**213**	**138**	**83**	
14	3	12	0	1	11	23	78	117	166	86	124	**177**	185	143	143	198	**228**	172	132	89	77	43	24	14
8	13	3	0	3	21	30	83	122	105	139	168	**186**	167	139	149	178	**269**	135	102	121	57	57	20	10
13	13	5	3	5	11	56	148	115	125	115	**186**	171	136	137	156	203	**206**	136	102	75	50	21	23	9
18	9	3	6	7	14	54	146	139	133	127	**151**	147	139	153	198	219	**224**	189	65	66	29	18	17	10

AM Peak 1130 - 1230 (699), AM PHF=0.94 PM Peak 1700 - 1800 (926), PM PHF=0.86

* Thursday, April 11, 2013=9095, 15 minute drops

0000	0100	0200	0300	0400	0500	0600	0700	0800	0900	1000	1100	1200	1300	1400	1500	1600	1700	1800	1900	2000	2100	2200	2300	
42	**24**	**15**	**8**	**24**	**55**	**151**	**418**	**528**	**463**	**490**	**605**	**736**	**682**	**583**	**583**	**763**	**947**	**720**	**453**	**348**	**221**	**140**	**104**	
14	4	3	0	1	10	17	70	92	162	119	123	**207**	185	150	110	185	**204**	194	103	117	49	35	26	22
10	8	4	6	8	11	37	95	124	108	91	145	**173**	177	154	152	203	**308**	205	130	111	64	50	26	17
9	8	3	1	6	15	45	129	141	80	147	173	**182**	172	136	167	202	**260**	170	121	70	52	31	32	11
10	5	5	1	10	20	54	124	172	114	134	**165**	174	149	144	155	175	**176**	152	100	50	57	24	21	14

AM Peak 1145 - 1245 (726), AM PHF=0.88 PM Peak 1700 - 1800 (947), PM PHF=0.77

* Friday, April 12, 2013=9201, 15 minute drops

0000	0100	0200	0300	0400	0500	0600	0700	0800	0900	1000	1100	1200	1300	1400	1500	1600	1700	1800	1900	2000	2100	2200	2300	
63	**62**	**35**	**21**	**21**	**63**	**159**	**434**	**470**	**475**	**495**	**610**	**784**	**662**	**575**	**661**	**919**	**808**	**677**	**421**	**284**	**236**	**149**	**124**	
22	11	14	4	4	10	18	79	103	115	130	153	**209**	199	140	162	221	**215**	200	120	65	58	40	48	33
17	11	12	9	4	12	44	65	100	116	100	164	**218**	181	145	170	198	**240**	202	117	71	56	36	38	24
11	28	6	5	2	18	34	138	103	112	122	127	**150**	151	126	152	**263**	172	150	92	91	74	38	17	25
14	12	3	3	11	23	64	153	165	133	143	**167**	208	131	166	178	**238**	181	125	92	58	49	36	21	35

AM Peak 1145 - 1245 (743), AM PHF=0.85 PM Peak 1630 - 1730 (956), PM PHF=0.91

* Saturday, April 13, 2013=7558, 15 minute drops

0000	0100	0200	0300	0400	0500	0600	0700	0800	0900	1000	1100	1200	1300	1400	1500	1600	1700	1800	1900	2000	2100	2200	2300	
116	**107**	**74**	**32**	**28**	**20**	**78**	**165**	**394**	**449**	**569**	**654**	**625**	**565**	**647**	**561**	**583**	**481**	**427**	**297**	**189**	**212**	**168**	**125**	
33	26	19	9	11	2	19	30	83	96	127	**167**	149	158	153	146	163	115	118	72	53	43	62	34	-
24	19	27	12	4	2	14	22	81	134	148	**202**	161	173	148	135	162	142	114	98	45	57	40	44	-
25	28	16	6	7	5	16	52	104	94	**135**	132	145	140	152	143	118	114	104	71	44	51	30	28	-
35	34	12	5	6	11	29	62	127	125	**160**	154	170	94	195	138	141	111	92	57	47	62	36	20	-

AM Peak 1030 - 1130 (663), AM PHF=0.82

MetroCount Traffic Executive
Event Counts

2080 -- English (ENU)

Datasets:

Site:	**21.NAPA ST (LINDA VISTA ROAD - RILEY ST) NORTHBOUND**
Input A:	1 - North bound. - Lane= 0, Added to totals. (/2.000)
Input B:	3 - South bound. - Lane= 0, Excluded from totals.
Survey Duration:	12:40 Monday, April 08, 2013 => 8:57 Monday, April 15, 2013
File:	092115Apr2013.EC0 (Base)
Data type:	Axle sensors - Separate (Count)

Profile:

Filter time:	**0:00 Tuesday, April 09, 2013 => 0:00 Sunday, April 14, 2013**

* Tuesday, April 09, 2013=8831, 15 minute drops

0000	0100	0200	0300	0400	0500	0600	0700	0800	0900	1000	1100	1200	1300	1400	1500	1600	1700	1800	1900	2000	2100	2200	2300	
21	**11**	**6**	**12**	**21**	**102**	**235**	**699**	**856**	**569**	**547**	**521**	**638**	**572**	**534**	**597**	**590**	**722**	**533**	**425**	**267**	**199**	**100**	**61**	
9	1	1	2	0	15	40	96	168	**203**	121	117	191	129	131	172	130	**189**	143	108	83	70	36	22	8
3	3	1	1	4	20	40	171	**166**	127	177	122	166	163	134	126	149	**178**	152	114	76	42	26	7	5
4	3	1	0	7	30	66	216	**255**	128	131	133	153	139	134	129	147	**215**	131	116	49	54	23	20	8
5	4	3	9	10	37	90	218	**268**	112	119	149	129	142	136	171	**165**	141	108	87	60	33	16	12	4

AM Peak 0815 - 0915 (891), AM PHF=0.83 PM Peak 1645 - 1745 (746), PM PHF=0.87

* Wednesday, April 10, 2013=8968, 15 minute drops

0000	0100	0200	0300	0400	0500	0600	0700	0800	0900	1000	1100	1200	1300	1400	1500	1600	1700	1800	1900	2000	2100	2200	2300	
25	**10**	**13**	**15**	**25**	**84**	**251**	**670**	**890**	**584**	**532**	**521**	**607**	**602**	**579**	**576**	**645**	**697**	**573**	**420**	**274**	**198**	**113**	**69**	
8	2	4	1	1	10	32	124	**252**	153	107	117	168	134	140	160	153	**191**	186	127	92	63	36	19	8
5	1	4	6	6	16	48	135	**209**	107	155	119	137	172	178	149	158	**181**	113	110	75	47	29	19	8
8	4	3	2	7	30	91	186	**216**	146	126	152	156	129	142	137	**189**	184	127	109	47	36	18	11	9
4	3	2	6	11	29	82	**225**	213	179	146	133	146	168	120	132	**145**	142	148	75	61	52	30	20	2

AM Peak 0745 - 0845 (902), AM PHF=0.89 PM Peak 1630 - 1730 (705), PM PHF=0.93

* Thursday, April 11, 2013=8722, 15 minute drops

0000	0100	0200	0300	0400	0500	0600	0700	0800	0900	1000	1100	1200	1300	1400	1500	1600	1700	1800	1900	2000	2100	2200	2300	
27	**22**	**7**	**12**	**22**	**73**	**227**	**681**	**785**	**534**	**540**	**503**	**586**	**590**	**607**	**625**	**544**	**746**	**533**	**380**	**290**	**177**	**102**	**115**	
8	3	2	2	3	11	28	105	166	**198**	116	112	156	140	142	171	138	**218**	143	126	100	53	38	30	8
8	6	0	3	6	17	38	147	**168**	122	184	107	134	145	159	153	127	**146**	121	86	65	43	28	24	12
9	6	4	2	5	20	69	202	**210**	95	144	136	143	152	171	148	159	**238**	132	90	65	40	20	40	9
2	7	1	6	8	25	93	228	**242**	119	97	149	154	154	135	153	120	**145**	139	78	60	41	17	21	7

AM Peak 0815 - 0915 (817), AM PHF=0.85 PM Peak 1700 - 1800 (746), PM PHF=0.78

* Friday, April 12, 2013=8551, 15 minute drops

0000	0100	0200	0300	0400	0500	0600	0700	0800	0900	1000	1100	1200	1300	1400	1500	1600	1700	1800	1900	2000	2100	2200	2300	
36	**26**	**21**	**16**	**20**	**75**	**217**	**554**	**707**	**464**	**517**	**570**	**596**	**604**	**571**	**597**	**693**	**658**	**546**	**385**	**274**	**168**	**127**	**115**	
8	8	5	4	4	12	40	84	**186**	114	132	133	165	159	129	162	171	**151**	181	125	82	43	46	36	15
12	4	5	4	6	13	38	113	**164**	108	105	125	150	154	126	136	144	**181**	141	99	77	51	28	20	17
9	6	6	6	4	20	61	151	**184**	114	132	144	142	135	150	181	202	**204**	116	71	62	39	34	35	14
7	8	5	2	6	30	78	**207**	174	128	149	169	139	156	166	118	**177**	122	108	91	54	36	19	24	13

AM Peak 0745 - 0845 (740), AM PHF=0.89 PM Peak 1645 - 1745 (712), PM PHF=0.87

* Saturday, April 13, 2013=6461, 15 minute drops

0000	0100	0200	0300	0400	0500	0600	0700	0800	0900	1000	1100	1200	1300	1400	1500	1600	1700	1800	1900	2000	2100	2200	2300	
59	**49**	**57**	**17**	**17**	**38**	**83**	**150**	**341**	**394**	**435**	**530**	**597**	**511**	**507**	**479**	**499**	**458**	**361**	**270**	**218**	**193**	**110**	**91**	
15	18	16	6	3	10	20	32	57	89	116	110	**124**	131	127	137	134	119	101	66	69	50	46	31	-
17	10	10	6	5	7	18	30	80	101	86	103	**153**	138	140	115	122	116	113	79	52	47	22	20	-
14	12	12	2	2	12	19	47	100	102	114	153	**164**	129	104	118	118	117	85	60	46	57	17	22	-
13	9	19	3	7	9	27	41	105	103	119	**165**	157	113	137	110	126	106	63	65	52	40	26	18	-

AM Peak 1145 - 1245 (605), AM PHF=0.92

MetroCount Traffic Executive
Event Counts

2081 -- English (ENU)

Datasets:

Site:	**21.NAPA ST (LINDA VISTA ROAD - RILEY ST) SOUTHBOUND**
Input A:	1 - North bound. - Lane= 0, Excluded from totals.
Input B:	3 - South bound. - Lane= 0, Added to totals. (/2.000)
Survey Duration:	12:40 Monday, April 08, 2013 => 8:57 Monday, April 15, 2013
File:	092115Apr2013.EC0 (Base)
Data type:	Axle sensors - Separate (Count)

Profile:

Filter time: **0:00 Tuesday, April 09, 2013 => 0:00 Sunday, April 14, 2013**

* Tuesday, April 09, 2013=8872, 15 minute drops

0000	0100	0200	0300	0400	0500	0600	0700	0800	0900	1000	1100	1200	1300	1400	1500	1600	1700	1800	1900	2000	2100	2200	2300	
33	**15**	**12**	**6**	**52**	**142**	**231**	**331**	**448**	**448**	**487**	**553**	**709**	**584**	**581**	**536**	**868**	**874**	**597**	**526**	**374**	**263**	**128**	**79**	
11	3	4	0	5	26	33	66	104	122	93	114	**179**	141	123	144	271	**197**	160	168	87	60	49	31	21
13	1	2	2	15	37	59	86	83	119	114	156	**201**	129	127	104	205	**236**	145	141	93	76	25	15	17
5	5	3	1	10	32	48	91	128	107	116	149	**180**	171	187	128	194	**257**	143	106	101	60	27	21	8
4	6	3	3	23	48	92	90	133	101	164	**135**	150	144	144	161	**199**	185	150	113	94	68	27	12	7

AM Peak 1145 - 1245 (694), AM PHF=0.87 PM Peak 1645 - 1745 (888), PM PHF=0.86

* Wednesday, April 10, 2013=8640, 15 minute drops

0000	0100	0200	0300	0400	0500	0600	0700	0800	0900	1000	1100	1200	1300	1400	1500	1600	1700	1800	1900	2000	2100	2200	2300	
53	**18**	**12**	**9**	**40**	**140**	**244**	**326**	**400**	**494**	**441**	**562**	**590**	**568**	**547**	**539**	**828**	**864**	**597**	**525**	**346**	**272**	**147**	**84**	
21	1	7	3	5	19	53	66	112	132	92	130	**134**	134	114	159	252	**207**	161	161	77	88	41	28	15
17	3	3	0	11	40	62	68	92	107	108	151	**139**	153	149	125	196	**242**	150	135	90	77	41	27	7
8	5	1	4	8	37	58	85	89	124	114	151	**179**	127	115	119	174	**194**	116	126	83	49	37	16	11
7	9	1	2	17	44	72	108	108	132	127	**131**	139	155	170	136	207	**221**	171	105	96	59	29	13	13

AM Peak 1145 - 1245 (582), AM PHF=0.81 PM Peak 1700 - 1800 (864), PM PHF=0.89

* Thursday, April 11, 2013=8959, 15 minute drops

0000	0100	0200	0300	0400	0500	0600	0700	0800	0900	1000	1100	1200	1300	1400	1500	1600	1700	1800	1900	2000	2100	2200	2300	
46	**16**	**13**	**11**	**41**	**117**	**190**	**308**	**381**	**514**	**547**	**583**	**694**	**666**	**574**	**589**	**779**	**875**	**650**	**529**	**376**	**233**	**131**	**102**	
15	2	6	1	4	19	37	65	94	154	114	136	**171**	153	134	124	217	**194**	164	169	123	58	44	33	14
7	8	1	5	14	30	46	73	71	123	133	129	**153**	195	154	145	199	**247**	169	119	86	58	26	28	22
11	4	2	3	10	26	43	77	90	110	143	173	**187**	170	126	145	191	**238**	140	107	85	68	37	25	8
13	2	5	2	14	42	64	93	127	128	158	**146**	184	149	161	176	173	**197**	177	134	83	49	25	17	10

AM Peak 1145 - 1245 (656), AM PHF=0.88 PM Peak 1700 - 1800 (875), PM PHF=0.89

* Friday, April 12, 2013=8565, 15 minute drops

0000	0100	0200	0300	0400	0500	0600	0700	0800	0900	1000	1100	1200	1300	1400	1500	1600	1700	1800	1900	2000	2100	2200	2300	
54	**35**	**34**	**10**	**32**	**129**	**203**	**344**	**429**	**478**	**475**	**560**	**693**	**682**	**625**	**661**	**869**	**663**	**518**	**327**	**285**	**182**	**170**	**111**	
14	11	16	2	4	18	46	61	114	109	128	140	**158**	183	146	167	**218**	166	146	86	78	43	45	37	18
22	11	11	4	7	35	51	101	87	130	127	134	**176**	188	137	174	**221**	190	157	94	83	53	53	34	18
8	8	4	3	6	30	41	81	94	118	112	138	**174**	173	166	158	**245**	156	95	78	73	45	37	25	21
10	6	3	1	15	47	65	102	135	122	108	**149**	185	139	176	162	**186**	152	120	70	52	41	37	17	21

AM Peak 1145 - 1245 (657), AM PHF=0.94 PM Peak 1600 - 1700 (869), PM PHF=0.89

* Saturday, April 13, 2013=6844, 15 minute drops

0000	0100	0200	0300	0400	0500	0600	0700	0800	0900	1000	1100	1200	1300	1400	1500	1600	1700	1800	1900	2000	2100	2200	2300	
78	**45**	**46**	**12**	**17**	**47**	**117**	**210**	**333**	**440**	**496**	**620**	**685**	**536**	**570**	**479**	**483**	**374**	**327**	**282**	**205**	**195**	**156**	**97**	
18	13	19	4	4	8	7	47	62	105	119	130	**153**	147	128	146	133	98	78	65	55	52	49	29	-
18	10	13	5	3	10	21	50	72	114	128	151	**201**	121	145	94	129	89	86	85	54	52	37	28	-
21	9	10	0	6	14	27	51	82	91	111	**166**	151	130	141	121	107	101	100	70	58	39	32	24	-
21	14	4	3	4	15	63	63	117	131	139	**174**	180	139	157	119	115	87	64	63	39	53	38	16	-

AM Peak 1130 - 1230 (693), AM PHF=0.86

MetroCount Traffic Executive
Event Counts

2082 -- English (ENU)

Datasets:

Site:	**22.NAPA ST (RILEY ST - FRIARS RD) NORTHBOUND**
Input A:	1 - North bound. - Lane= 0, Added to totals. (/2.000)
Input B:	0 - Unused or unknown. - Lane= 0, Excluded from totals.
Survey Duration:	12:05 Monday, April 08, 2013 => 9:01 Monday, April 15, 2013
File:	0922N15Apr2013.EC0 (Base)
Data type:	Axle sensors - Separate (Count)

Profile:

Filter time: **0:00 Tuesday, April 09, 2013 => 0:00 Sunday, April 14, 2013**

* Tuesday, April 09, 2013=7336, 15 minute drops

0000	0100	0200	0300	0400	0500	0600	0700	0800	0900	1000	1100	1200	1300	1400	1500	1600	1700	1800	1900	2000	2100	2200	2300	
23	**12**	**9**	**12**	**16**	**97**	**208**	**663**	**688**	**494**	**480**	**431**	**506**	**457**	**434**	**503**	**451**	**552**	**435**	**323**	**201**	**177**	**102**	**67**	
8	1	1	3	0	10	32	115	148	**169**	111	85	149	119	112	133	98	**145**	118	83	55	51	35	16	11
2	5	1	1	6	14	31	171	**138**	109	163	95	136	127	118	117	110	**152**	104	81	75	41	25	7	5
6	4	4	0	3	33	58	187	**195**	117	105	118	132	108	110	109	121	**152**	104	92	35	49	26	29	12
7	2	3	8	8	40	88	191	**209**	100	102	133	89	104	95	145	**124**	104	110	68	37	37	16	16	4

AM Peak 0815 - 0915 (710), AM PHF=0.85 PM Peak 1645 - 1745 (572), PM PHF=0.94

* Wednesday, April 10, 2013=7647, 15 minute drops

0000	0100	0200	0300	0400	0500	0600	0700	0800	0900	1000	1100	1200	1300	1400	1500	1600	1700	1800	1900	2000	2100	2200	2300	
31	**14**	**17**	**14**	**25**	**74**	**230**	**647**	**789**	**502**	**425**	**437**	**495**	**485**	**494**	**497**	**541**	**567**	**448**	**346**	**221**	**183**	**101**	**69**	
11	2	5	0	1	7	26	111	**205**	120	112	94	160	130	115	130	121	**147**	122	88	66	53	37	18	14
5	3	5	7	9	10	46	131	**174**	95	111	110	104	144	166	111	158	**159**	108	91	56	40	22	13	9
12	6	2	1	6	25	88	203	**185**	125	95	120	115	93	119	123	135	**137**	97	94	45	33	18	11	14
4	3	6	6	10	32	70	204	**226**	163	108	114	116	119	95	133	**128**	125	122	73	55	58	25	29	8

AM Peak 0800 - 0900 (789), AM PHF=0.87 PM Peak 1645 - 1745 (570), PM PHF=0.90

* Thursday, April 11, 2013=7342, 15 minute drops

0000	0100	0200	0300	0400	0500	0600	0700	0800	0900	1000	1100	1200	1300	1400	1500	1600	1700	1800	1900	2000	2100	2200	2300	
44	**21**	**11**	**13**	**15**	**70**	**231**	**622**	**679**	**439**	**476**	**421**	**485**	**459**	**519**	**527**	**435**	**577**	**436**	**312**	**231**	**141**	**91**	**94**	
14	2	4	1	2	8	30	100	140	**156**	120	99	136	116	130	142	105	**170**	108	111	77	41	33	17	10
9	8	0	5	4	16	39	137	**146**	91	140	87	121	128	124	118	91	**129**	104	74	52	36	28	16	9
14	6	6	1	3	23	68	177	**191**	85	135	116	109	90	145	127	142	**165**	106	77	56	28	17	36	8
8	5	1	6	6	23	95	208	**203**	109	82	120	119	125	121	141	97	**114**	118	51	47	36	13	26	9

AM Peak 0815 - 0915 (694), AM PHF=0.86 PM Peak 1700 - 1800 (577), PM PHF=0.85

* Friday, April 12, 2013=7279, 15 minute drops

0000	0100	0200	0300	0400	0500	0600	0700	0800	0900	1000	1100	1200	1300	1400	1500	1600	1700	1800	1900	2000	2100	2200	2300	
35	**25**	**30**	**23**	**18**	**68**	**204**	**528**	**606**	**420**	**444**	**494**	**526**	**492**	**459**	**486**	**557**	**506**	**451**	**309**	**223**	**154**	**111**	**117**	
10	8	5	10	6	12	35	78	**168**	102	112	108	156	138	96	129	142	**120**	145	93	67	42	47	31	17
9	3	7	4	5	11	44	114	**154**	102	83	106	136	114	108	121	121	**122**	104	68	63	40	26	20	18
8	5	9	6	3	18	51	**166**	141	108	112	150	117	110	134	121	135	**178**	106	76	46	33	22	39	16
9	10	10	3	4	28	75	**170**	143	109	138	132	118	131	122	115	**160**	87	97	73	48	40	17	27	18

AM Peak 0730 - 0830 (658), AM PHF=0.97 PM Peak 1645 - 1745 (579), PM PHF=0.82

* Saturday, April 13, 2013=5605, 15 minute drops

0000	0100	0200	0300	0400	0500	0600	0700	0800	0900	1000	1100	1200	1300	1400	1500	1600	1700	1800	1900	2000	2100	2200	2300	
68	**51**	**54**	**18**	**12**	**38**	**91**	**142**	**314**	**336**	**341**	**434**	**477**	**435**	**454**	**449**	**440**	**408**	**296**	**233**	**189**	**152**	**94**	**82**	
17	17	12	6	2	12	18	30	59	75	93	100	**104**	107	118	105	124	107	75	69	51	38	40	21	-
18	12	8	4	4	6	21	32	71	84	61	80	**126**	125	133	113	98	102	83	59	48	37	21	21	-
16	11	8	4	2	10	22	37	87	79	92	**132**	118	113	73	119	113	99	75	53	41	46	14	24	-
18	12	27	4	4	11	31	44	98	100	95	**124**	129	91	131	113	106	102	64	52	50	32	20	16	-

AM Peak 1130 - 1230 (485), AM PHF=0.92

MetroCount Traffic Executive
Event Counts

2084 -- English (ENU)

Datasets:

Site:	**22.NAPA ST (RILEY ST - FRIARS RD) SOUTHBOUND**
Input A:	3 - South bound. - Lane= 0, Added to totals. (/2.000)
Input B:	0 - Unused or unknown. - Lane= 0, Excluded from totals.
Survey Duration:	11:54 Monday, April 08, 2013 => 9:07 Monday, April 15, 2013
File:	0922S15Apr2013.EC0 (Base)
Data type:	Axle sensors - Separate (Count)

Profile:

Filter time: **0:00 Tuesday, April 09, 2013 => 0:00 Sunday, April 14, 2013**

* Tuesday, April 09, 2013=6351, 15 minute drops

0000	0100	0200	0300	0400	0500	0600	0700	0800	0900	1000	1100	1200	1300	1400	1500	1600	1700	1800	1900	2000	2100	2200	2300	
33	**13**	**11**	**5**	**49**	**114**	**169**	**221**	**263**	**309**	**329**	**349**	**458**	**388**	**386**	**384**	**587**	**701**	**457**	**415**	**306**	**221**	**116**	**72**	
13	3	5	0	4	21	24	46	55	80	56	74	**118**	99	90	103	172	**160**	121	137	63	52	43	26	21
11	1	0	2	14	33	49	56	56	80	79	94	**141**	83	91	68	149	**180**	114	99	78	64	22	15	14
5	5	4	2	12	23	35	59	80	79	80	86	**90**	100	99	103	138	**213**	119	83	86	50	27	19	8
4	4	2	1	19	37	62	61	73	71	115	**95**	109	106	108	110	129	**149**	104	97	79	56	25	12	7

AM Peak 1145 - 1245 (444), AM PHF=0.79 PM Peak 1700 - 1800 (701), PM PHF=0.82

* Wednesday, April 10, 2013=6273, 15 minute drops

0000	0100	0200	0300	0400	0500	0600	0700	0800	0900	1000	1100	1200	1300	1400	1500	1600	1700	1800	1900	2000	2100	2200	2300	
50	**15**	**13**	**5**	**35**	**128**	**188**	**213**	**272**	**355**	**302**	**345**	**353**	**361**	**389**	**409**	**611**	**667**	**429**	**391**	**284**	**242**	**143**	**80**	
21	1	8	1	4	15	41	51	71	**88**	68	87	94	75	79	106	178	**164**	103	125	56	68	39	28	13
14	2	3	0	10	42	48	45	65	**84**	80	81	82	84	104	96	148	**187**	116	84	72	69	36	26	5
8	6	1	2	7	33	53	48	60	**92**	69	92	87	86	92	94	145	**168**	85	103	73	46	36	14	9
7	6	1	2	14	38	47	69	77	**91**	85	86	91	116	114	113	141	**149**	125	80	84	59	32	12	14

AM Peak 0900 - 1000 (355), AM PHF=0.97 PM Peak 1700 - 1800 (667), PM PHF=0.89

* Thursday, April 11, 2013=6267, 15 minute drops

0000	0100	0200	0300	0400	0500	0600	0700	0800	0900	1000	1100	1200	1300	1400	1500	1600	1700	1800	1900	2000	2100	2200	2300	
41	**19**	**10**	**8**	**32**	**106**	**143**	**199**	**267**	**341**	**362**	**384**	**434**	**421**	**370**	**423**	**612**	**670**	**436**	**341**	**266**	**174**	**114**	**98**	
13	4	5	1	4	20	26	47	71	92	75	88	**100**	99	93	84	179	**150**	121	112	83	45	42	31	12
5	9	0	4	12	31	35	41	52	84	93	86	**103**	117	92	108	160	**196**	114	77	60	38	22	26	17
9	4	1	2	6	22	39	50	67	75	100	104	**116**	109	82	103	139	**176**	96	81	64	51	32	22	8
14	2	4	1	10	34	43	61	77	90	96	**107**	116	98	104	129	135	**149**	105	72	60	40	18	20	5

AM Peak 1145 - 1245 (425), AM PHF=0.92 PM Peak 1700 - 1800 (670), PM PHF=0.86

* Friday, April 12, 2013=6144, 15 minute drops

0000	0100	0200	0300	0400	0500	0600	0700	0800	0900	1000	1100	1200	1300	1400	1500	1600	1700	1800	1900	2000	2100	2200	2300	
42	**30**	**31**	**7**	**31**	**110**	**168**	**224**	**279**	**307**	**338**	**381**	**436**	**475**	**436**	**447**	**635**	**496**	**377**	**266**	**234**	**151**	**151**	**100**	
12	7	14	2	4	16	33	45	73	65	95	103	**91**	130	102	108	**154**	123	98	61	62	37	37	36	17
17	8	10	2	6	33	48	58	59	78	82	92	**117**	127	103	104	**165**	154	112	83	68	48	47	32	13
8	6	4	2	6	23	29	56	67	73	86	86	**110**	119	119	117	**163**	117	74	71	64	34	35	16	20
5	9	3	1	15	38	59	66	81	91	76	**100**	118	100	113	118	**154**	103	94	52	41	32	33	16	21

AM Peak 1145 - 1245 (418), AM PHF=0.90 PM Peak 1600 - 1700 (635), PM PHF=0.96

* Saturday, April 13, 2013=4943, 15 minute drops

0000	0100	0200	0300	0400	0500	0600	0700	0800	0900	1000	1100	1200	1300	1400	1500	1600	1700	1800	1900	2000	2100	2200	2300	
71	**40**	**35**	**14**	**12**	**39**	**86**	**154**	**201**	**282**	**361**	**378**	**417**	**401**	**402**	**352**	**352**	**304**	**261**	**217**	**182**	**165**	**139**	**83**	
17	12	12	5	1	4	6	33	38	62	90	89	**99**	92	101	110	101	77	62	54	47	46	40	28	-
13	11	11	5	2	7	18	41	45	77	82	90	**107**	110	96	74	105	77	64	59	42	37	36	22	-
20	5	9	0	5	15	16	39	41	60	90	91	**95**	92	100	87	74	80	80	52	52	33	26	18	-
21	12	3	4	4	13	46	42	78	84	100	**108**	116	109	106	81	73	72	56	53	42	49	37	15	-

AM Peak 1145 - 1245 (409), AM PHF=0.95

MetroCount Traffic Executive
Event Counts

2086 -- English (ENU)

Datasets:

Site:	**23.MILTON ST (EAST OF MORENA BLVD) EASTBOUND**
Input A:	4 - West bound. - Lane= 0, Excluded from totals.
Input B:	2 - East bound. - Lane= 0, Added to totals. (/2.000)
Survey Duration:	18:18 Monday, April 08, 2013 => 11:46 Monday, April 15, 2013
File:	092315Apr2013.EC0 (Plus)
Data type:	Axle sensors - Split (Count)

Profile:

Filter time: **0:00 Tuesday, April 09, 2013 => 0:00 Sunday, April 14, 2013**

* Tuesday, April 09, 2013=1583, 15 minute drops

0000	0100	0200	0300	0400	0500	0600	0700	0800	0900	1000	1100	1200	1300	1400	1500	1600	1700	1800	1900	2000	2100	2200	2300	
8	**2**	**3**	**6**	**14**	**8**	**34**	**136**	**161**	**91**	**74**	**97**	**89**	**95**	**116**	**142**	**121**	**90**	**103**	**71**	**58**	**33**	**16**	**19**	
2	1	1	0	0	1	1	16	24	**31**	23	30	18	32	23	**32**	26	34	21	17	20	5	3	6	1
3	1	0	0	2	1	2	37	24	**27**	25	20	28	18	27	**44**	24	20	29	15	18	6	4	6	0
1	0	1	6	1	3	12	26	**49**	16	11	22	20	12	**37**	33	37	20	21	15	5	17	3	4	2
2	0	1	0	11	3	19	57	**65**	18	16	25	23	34	**30**	33	35	17	32	25	16	6	6	3	0

AM Peak 0830 - 0930 (171), AM PHF=0.66 PM Peak 1430 - 1530 (143), PM PHF=0.81

* Wednesday, April 10, 2013=1617, 15 minute drops

0000	0100	0200	0300	0400	0500	0600	0700	0800	0900	1000	1100	1200	1300	1400	1500	1600	1700	1800	1900	2000	2100	2200	2300	
3	**3**	**4**	**0**	**8**	**17**	**45**	**111**	**180**	**112**	**91**	**83**	**131**	**102**	**121**	**127**	**102**	**112**	**87**	**60**	**53**	**38**	**20**	**10**	
1	2	0	0	0	8	2	11	**28**	26	23	8	28	35	21	**32**	25	31	18	15	20	6	8	1	0
0	1	3	0	0	2	5	19	**47**	29	24	29	37	22	26	**41**	31	33	21	20	11	8	2	3	2
2	0	1	0	0	5	11	25	**49**	26	26	20	27	22	**37**	35	20	26	26	17	11	17	6	3	0
0	0	0	0	8	2	28	**57**	56	32	18	26	41	24	**37**	20	27	23	23	9	12	7	4	3	0

AM Peak 0745 - 0845 (181), AM PHF=0.79 PM Peak 1430 - 1530 (146), PM PHF=0.90

* Thursday, April 11, 2013=1565, 15 minute drops

0000	0100	0200	0300	0400	0500	0600	0700	0800	0900	1000	1100	1200	1300	1400	1500	1600	1700	1800	1900	2000	2100	2200	2300	
2	**3**	**5**	**2**	**13**	**16**	**34**	**121**	**162**	**71**	**83**	**87**	**121**	**109**	**126**	**111**	**118**	**110**	**81**	**72**	**58**	**31**	**23**	**10**	
0	1	2	0	0	4	4	16	20	**22**	12	21	23	23	19	**30**	27	30	21	13	16	4	5	1	1
2	1	0	1	5	4	6	21	**30**	18	30	16	38	23	**30**	21	26	31	27	19	10	8	6	4	0
0	1	3	1	8	7	7	27	**48**	19	20	26	25	30	**41**	31	21	30	16	20	14	10	6	3	2
0	0	0	0	0	2	17	58	**65**	12	22	24	36	34	**37**	29	44	19	17	21	19	9	7	2	1

AM Peak 0815 - 0915 (163), AM PHF=0.63 PM Peak 1415 - 1515 (137), PM PHF=0.83

* Friday, April 12, 2013=1614, 15 minute drops

0000	0100	0200	0300	0400	0500	0600	0700	0800	0900	1000	1100	1200	1300	1400	1500	1600	1700	1800	1900	2000	2100	2200	2300	
4	**2**	**2**	**4**	**3**	**23**	**29**	**121**	**187**	**95**	**68**	**88**	**102**	**102**	**125**	**168**	**109**	**106**	**93**	**70**	**40**	**42**	**16**	**22**	
1	0	0	0	2	12	1	17	**35**	26	17	19	20	29	23	34	**36**	29	30	20	10	13	4	13	2
0	0	0	0	0	2	2	24	**39**	23	13	23	20	27	32	**46**	25	24	20	21	9	7	3	4	4
2	1	2	3	0	6	10	24	**57**	25	17	21	29	22	33	**51**	23	21	27	13	15	11	6	1	2
1	1	0	1	1	3	16	**57**	57	21	21	25	33	25	38	**38**	26	32	16	17	6	11	3	4	1

AM Peak 0745 - 0845 (187), AM PHF=0.82 PM Peak 1515 - 1615 (170), PM PHF=0.83

* Saturday, April 13, 2013=1139, 15 minute drops

0000	0100	0200	0300	0400	0500	0600	0700	0800	0900	1000	1100	1200	1300	1400	1500	1600	1700	1800	1900	2000	2100	2200	2300	
9	**9**	**4**	**1**	**11**	**2**	**10**	**40**	**64**	**75**	**86**	**77**	**92**	**91**	**74**	**79**	**115**	**82**	**81**	**49**	**32**	**23**	**26**	**13**	
2	1	1	1	0	0	0	8	11	18	22	**21**	30	13	24	19	25	24	20	10	9	6	8	1	-
4	4	3	0	2	0	3	7	20	26	17	**29**	18	29	24	17	26	24	20	12	8	3	4	2	-
2	4	0	0	0	1	3	9	18	19	**34**	11	18	23	15	21	27	22	30	15	8	10	4	7	-
1	0	0	0	9	1	4	16	16	13	**14**	16	26	26	11	23	37	12	11	12	7	4	11	3	-

AM Peak 1030 - 1130 (98), AM PHF=0.73

MetroCount Traffic Executive
Event Counts

2111 -- English (ENU)

Datasets:

Site:	**23.MILTON ST (EAST OF MORENA BLVD) WESTBOUND**
Input A:	4 - West bound. - Lane= 0, Added to totals. (/2.000)
Input B:	2 - East bound. - Lane= 0, Subtracted from totals. (/-2.000)
Survey Duration:	18:18 Monday, April 08, 2013 => 11:46 Monday, April 15, 2013
File:	092315Apr2013.EC0 (Plus)
Data type:	Axle sensors - Split (Count)

Profile:

Filter time: **0:00 Tuesday, April 09, 2013 => 0:00 Sunday, April 14, 2013**

* Tuesday, April 09, 2013=2086, 15 minute drops

0000	0100	0200	0300	0400	0500	0600	0700	0800	0900	1000	1100	1200	1300	1400	1500	1600	1700	1800	1900	2000	2100	2200	2300	
5	**1**	**1**	**3**	**12**	**19**	**54**	**150**	**204**	**181**	**137**	**116**	**99**	**132**	**167**	**206**	**163**	**145**	**123**	**59**	**50**	**38**	**17**	**9**	
2	0	0	1	1	3	6	25	67	**56**	38	21	32	35	28	42	**63**	39	37	12	10	6	4	3	1
2	1	0	0	5	7	7	24	35	**66**	43	29	19	25	32	**49**	40	35	29	22	13	7	5	4	2
2	0	1	2	1	2	13	40	**48**	23	30	32	23	29	43	**56**	30	37	39	15	16	13	3	2	0
1	0	0	0	5	7	29	62	**55**	36	27	35	25	44	66	**60**	31	35	20	11	12	13	5	0	0

AM Peak 0830 - 0930 (225), AM PHF=0.85 PM Peak 1515 - 1615 (228), PM PHF=0.90

* Wednesday, April 10, 2013=2065, 15 minute drops

0000	0100	0200	0300	0400	0500	0600	0700	0800	0900	1000	1100	1200	1300	1400	1500	1600	1700	1800	1900	2000	2100	2200	2300	
3	**1**	**4**	**3**	**10**	**24**	**51**	**121**	**180**	**161**	**114**	**120**	**138**	**173**	**176**	**195**	**126**	**152**	**111**	**78**	**54**	**37**	**28**	**10**	
1	0	1	1	0	6	5	22	56	**48**	20	27	36	47	25	**43**	28	50	34	18	16	8	13	2	1
2	1	2	0	2	7	10	24	41	**35**	34	24	30	41	59	**49**	35	40	23	23	18	12	5	7	3
0	0	0	1	0	4	14	30	29	**44**	28	31	34	41	33	**64**	35	34	25	22	8	10	3	0	1
0	0	1	1	8	8	22	46	**55**	34	33	39	38	45	**61**	40	29	29	30	15	13	7	7	1	0

AM Peak 0845 - 0945 (182), AM PHF=0.82 PM Peak 1445 - 1545 (216), PM PHF=0.85

* Thursday, April 11, 2013=2088, 15 minute drops

0000	0100	0200	0300	0400	0500	0600	0700	0800	0900	1000	1100	1200	1300	1400	1500	1600	1700	1800	1900	2000	2100	2200	2300	
5	**3**	**2**	**2**	**11**	**21**	**48**	**132**	**191**	**164**	**122**	**117**	**158**	**172**	**157**	**164**	**177**	**151**	**109**	**87**	**38**	**34**	**21**	**8**	
1	0	0	1	0	6	3	25	57	**68**	29	34	50	77	30	48	**57**	48	31	30	12	9	6	2	3
3	1	0	0	3	2	13	26	33	**41**	27	23	42	42	25	32	**42**	29	36	25	13	13	9	1	2
1	2	2	1	8	8	12	28	**40**	30	39	32	35	25	35	29	**38**	50	23	13	7	7	5	5	0
0	0	0	0	1	6	21	54	**62**	26	28	28	32	29	68	**55**	41	24	20	20	6	6	3	0	1

AM Peak 0830 - 0930 (210), AM PHF=0.78 PM Peak 1545 - 1645 (191), PM PHF=0.85

* Friday, April 12, 2013=2207, 15 minute drops

0000	0100	0200	0300	0400	0500	0600	0700	0800	0900	1000	1100	1200	1300	1400	1500	1600	1700	1800	1900	2000	2100	2200	2300	
6	**5**	**2**	**2**	**6**	**26**	**42**	**155**	**187**	**169**	**119**	**134**	**142**	**154**	**156**	**226**	**175**	**171**	**116**	**87**	**48**	**34**	**21**	**29**	
3	1	0	0	1	8	4	25	61	**53**	37	33	42	36	37	**46**	44	42	40	25	9	9	8	7	1
2	0	0	1	0	6	11	33	34	**41**	26	32	32	36	30	**39**	32	42	24	23	18	5	1	4	3
0	2	1	1	1	10	9	42	30	**42**	31	38	31	47	28	**70**	53	35	27	19	10	8	9	12	1
1	2	1	0	4	3	19	55	**63**	33	26	32	37	36	61	**72**	48	52	25	21	11	13	3	7	0

AM Peak 0845 - 0945 (198), AM PHF=0.79 PM Peak 1500 - 1600 (226), PM PHF=0.78

* Saturday, April 13, 2013=1559, 15 minute drops

0000	0100	0200	0300	0400	0500	0600	0700	0800	0900	1000	1100	1200	1300	1400	1500	1600	1700	1800	1900	2000	2100	2200	2300	
5	**4**	**5**	**4**	**7**	**7**	**21**	**40**	**85**	**126**	**135**	**138**	**136**	**107**	**124**	**124**	**136**	**94**	**91**	**56**	**50**	**27**	**24**	**18**	
1	0	2	0	0	3	1	8	21	36	25	33	**41**	29	38	27	31	33	23	22	11	4	4	5	-
3	2	1	1	1	1	4	3	21	33	37	**41**	32	20	33	24	35	22	31	9	17	12	9	3	-
1	1	2	3	1	2	11	13	14	31	46	**35**	29	24	29	40	39	18	23	15	13	7	8	6	-
0	1	0	0	6	1	6	17	30	27	27	**30**	35	34	24	34	31	21	15	11	9	5	4	4	-

AM Peak 1115 - 1215 (147), AM PHF=0.89

MetroCount Traffic Executive
Vehicle Counts

2107 -- English (ENU)

Datasets:

Site: **24.KNOXVILLE ST (MORENA BLVD - SAVANNAH ST) EASTBOUND**
Direction: 6 - West bound A>B, East bound B>A. **Lane:** 0
Survey Duration: 19:40 Monday, April 08, 2013 => 11:44 Monday, April 15, 2013
File: 092415Apr2013.EC0 (Plus)
Data type: Axle sensors - Paired (Class/Speed/Count)

Profile:

Filter time: **0:00 Tuesday, April 09, 2013 => 0:00 Sunday, April 14, 2013**
Included classes: 1, 2, 3, 4, 5, 6, 7, 8, 9, 10, 11, 12, 13
Direction: East (bound)

* Tuesday, April 09, 2013 - Total=417, 15 minute drops

0000	0100	0200	0300	0400	0500	0600	0700	0800	0900	1000	1100	1200	1300	1400	1500	1600	1700	1800	1900	2000	2100	2200	2300	
1	**0**	**2**	**0**	**0**	**5**	**10**	**11**	**19**	**23**	**28**	**30**	**43**	**47**	**39**	**38**	**49**	**18**	**1**	**19**	**26**	**5**	**3**	**0**	
1	0	0	0	0	0	3	5	1	4	13	9	**17**	13	11	8	10	**11**	0	5	11	3	0	0	0
0	0	0	0	0	2	3	2	4	3	3	**10**	8	10	3	13	**14**	5	0	4	1	0	3	0	0
0	0	0	0	0	0	1	3	8	7	7	**8**	9	12	13	10	**18**	2	0	5	7	2	0	0	0
0	0	2	0	0	3	3	1	6	9	5	**3**	9	12	12	7	**7**	0	1	5	7	0	0	0	0

AM Peak 1115 - 1215 (38), AM PHF=0.56 PM Peak 1615 - 1715 (50), PM PHF=0.69

* Wednesday, April 10, 2013 - Total=503, 15 minute drops

0000	0100	0200	0300	0400	0500	0600	0700	0800	0900	1000	1100	1200	1300	1400	1500	1600	1700	1800	1900	2000	2100	2200	2300	
0	**0**	**0**	**1**	**0**	**1**	**8**	**10**	**19**	**17**	**39**	**52**	**37**	**40**	**35**	**51**	**61**	**28**	**25**	**31**	**24**	**18**	**3**	**3**	
0	0	0	0	0	0	0	3	2	1	9	**13**	8	8	10	6	**16**	11	6	5	5	10	1	0	1
0	0	0	1	0	0	2	3	4	7	8	**11**	7	11	11	18	**14**	5	7	6	9	6	0	2	0
0	0	0	0	0	1	1	3	6	4	10	**16**	12	11	4	14	**19**	8	9	12	7	1	1	0	0
0	0	0	0	0	0	5	1	7	5	**12**	12	10	10	10	**13**	12	4	3	8	3	1	1	1	1

AM Peak 1045 - 1145 (52), AM PHF=0.81 PM Peak 1545 - 1645 (62), PM PHF=0.82

* Thursday, April 11, 2013 - Total=432, 15 minute drops

0000	0100	0200	0300	0400	0500	0600	0700	0800	0900	1000	1100	1200	1300	1400	1500	1600	1700	1800	1900	2000	2100	2200	2300	
2	**0**	**0**	**0**	**1**	**1**	**2**	**2**	**14**	**24**	**31**	**24**	**40**	**41**	**51**	**55**	**50**	**27**	**21**	**17**	**15**	**8**	**4**	**2**	
1	0	0	0	0	1	2	1	2	6	7	6	**12**	11	16	**16**	18	9	14	5	7	0	2	0	1
0	0	0	0	0	0	0	0	5	4	8	5	**11**	12	11	**12**	7	10	7	0	1	6	0	0	0
0	0	0	0	0	0	0	1	4	7	6	**11**	10	7	9	**15**	14	4	0	9	4	1	1	0	1
1	0	0	0	1	0	0	0	3	7	10	**2**	7	11	**15**	12	11	4	0	3	3	1	1	2	0

AM Peak 1130 - 1230 (36), AM PHF=0.75 PM Peak 1445 - 1545 (58), PM PHF=0.91

* Friday, April 12, 2013 - Total=560, 15 minute drops

0000	0100	0200	0300	0400	0500	0600	0700	0800	0900	1000	1100	1200	1300	1400	1500	1600	1700	1800	1900	2000	2100	2200	2300	
2	**0**	**0**	**0**	**0**	**2**	**7**	**9**	**11**	**29**	**30**	**38**	**43**	**51**	**50**	**55**	**59**	**35**	**49**	**32**	**30**	**24**	**3**	**1**	
1	0	0	0	0	1	0	3	1	5	8	5	**12**	14	9	**17**	14	12	17	10	8	4	1	0	0
0	0	0	0	0	0	1	0	4	10	8	**10**	6	15	15	**19**	16	5	9	10	9	2	1	0	0
1	0	0	0	0	1	4	3	2	7	3	**15**	14	10	6	**7**	15	13	13	7	12	5	0	1	0
0	0	0	0	0	0	2	3	4	7	11	**8**	11	12	**20**	12	14	5	10	5	1	13	1	0	1

AM Peak 1115 - 1215 (45), AM PHF=0.75 PM Peak 1445 - 1545 (63), PM PHF=0.79

* Saturday, April 13, 2013 - Total=282, 15 minute drops

0000	0100	0200	0300	0400	0500	0600	0700	0800	0900	1000	1100	1200	1300	1400	1500	1600	1700	1800	1900	2000	2100	2200	2300	
1	**0**	**0**	**0**	**0**	**7**	**5**	**6**	**14**	**8**	**24**	**17**	**20**	**27**	**12**	**19**	**33**	**31**	**20**	**18**	**11**	**7**	**2**	**0**	
0	0	0	0	0	2	1	1	4	3	2	**6**	7	6	7	0	7	13	7	8	4	2	1	0	-
0	0	0	0	0	0	2	1	3	3	**5**	3	6	6	5	0	8	6	4	4	4	4	0	0	-
0	0	0	0	0	2	0	2	2	0	**12**	1	3	6	0	2	8	9	6	3	0	1	1	0	-
1	0	0	0	0	3	2	2	5	2	**5**	7	4	9	0	17	10	3	3	3	3	0	0	0	-

AM Peak 1015 - 1115 (28), AM PHF=0.58

MetroCount Traffic Executive
Vehicle Counts

2108 -- English (ENU)

Datasets:

Site: **24.KNOXVILLE ST (MORENA BLVD - SAVANNAH ST) WESTBOUND**
Direction: 6 - West bound A>B, East bound B>A. **Lane:** 0
Survey Duration: 19:40 Monday, April 08, 2013 => 11:44 Monday, April 15, 2013
File: 092415Apr2013.EC0 (Plus)
Data type: Axle sensors - Paired (Class/Speed/Count)

Profile:

Filter time: **0:00 Tuesday, April 09, 2013 => 0:00 Sunday, April 14, 2013**
Included classes: 1, 2, 3, 4, 5, 6, 7, 8, 9, 10, 11, 12, 13
Direction: West (bound)

* Tuesday, April 09, 2013 - Total=423, 15 minute drops

0000	0100	0200	0300	0400	0500	0600	0700	0800	0900	1000	1100	1200	1300	1400	1500	1600	1700	1800	1900	2000	2100	2200	2300	
1	**0**	**3**	**0**	**2**	**8**	**16**	**27**	**47**	**39**	**36**	**31**	**38**	**39**	**34**	**32**	**30**	**13**	**2**	**15**	**8**	**2**	**0**	**0**	
1	0	0	0	0	1	6	8	8	**10**	13	6	13	**9**	9	11	13	4	0	4	4	1	0	0	0
0	0	3	0	0	3	5	4	8	**10**	8	8	5	**12**	12	6	10	9	0	5	4	0	0	0	0
0	0	0	0	0	1	4	7	**16**	8	7	6	9	**12**	9	8	2	0	0	1	0	1	0	0	0
0	0	0	0	2	3	1	8	**15**	11	8	11	**11**	6	4	7	5	0	2	5	0	0	0	0	0

AM Peak 0830 - 0930 (51), AM PHF=0.80 PM Peak 1245 - 1345 (44), PM PHF=0.92

* Wednesday, April 10, 2013 - Total=511, 15 minute drops

0000	0100	0200	0300	0400	0500	0600	0700	0800	0900	1000	1100	1200	1300	1400	1500	1600	1700	1800	1900	2000	2100	2200	2300	
0	**0**	**0**	**1**	**1**	**7**	**20**	**27**	**43**	**28**	**44**	**49**	**38**	**45**	**36**	**39**	**34**	**25**	**23**	**37**	**7**	**4**	**2**	**1**	
0	0	0	0	0	3	5	10	7	11	16	**10**	6	10	**12**	5	11	6	1	8	2	3	0	0	1
0	0	0	1	0	0	6	4	10	4	8	**16**	16	7	**11**	14	7	8	3	7	2	0	0	0	0
0	0	0	0	0	1	4	9	10	6	8	**13**	6	**14**	5	11	5	4	11	22	1	0	1	1	0
0	0	0	0	1	3	5	4	16	7	**12**	10	10	**14**	8	9	11	7	8	0	2	1	1	0	1

AM Peak 1045 - 1145 (51), AM PHF=0.80 PM Peak 1330 - 1430 (51), PM PHF=0.91

* Thursday, April 11, 2013 - Total=419, 15 minute drops

0000	0100	0200	0300	0400	0500	0600	0700	0800	0900	1000	1100	1200	1300	1400	1500	1600	1700	1800	1900	2000	2100	2200	2300	
2	**0**	**0**	**0**	**4**	**7**	**4**	**24**	**35**	**46**	**30**	**22**	**36**	**47**	**38**	**42**	**25**	**18**	**6**	**16**	**6**	**6**	**2**	**3**	
1	0	0	0	0	2	4	7	6	**18**	5	4	9	**15**	12	11	7	6	1	4	1	0	1	0	0
0	0	0	0	0	0	0	3	**11**	8	4	7	9	**13**	7	8	5	4	5	2	2	3	0	0	0
0	0	0	0	1	1	0	4	**9**	11	9	10	9	**10**	6	12	7	3	0	4	1	2	1	0	0
1	0	0	0	3	4	0	10	**9**	9	12	1	**9**	9	13	11	6	5	0	6	2	1	0	3	0

AM Peak 0815 - 0915 (47), AM PHF=0.65 PM Peak 1245 - 1345 (47), PM PHF=0.78

* Friday, April 12, 2013 - Total=589, 15 minute drops

0000	0100	0200	0300	0400	0500	0600	0700	0800	0900	1000	1100	1200	1300	1400	1500	1600	1700	1800	1900	2000	2100	2200	2300	
0	**0**	**0**	**0**	**2**	**9**	**26**	**26**	**34**	**39**	**39**	**43**	**37**	**45**	**58**	**43**	**53**	**33**	**38**	**34**	**23**	**5**	**2**	**0**	
0	0	0	0	0	4	6	6	8	**16**	14	7	7	14	15	**16**	15	15	14	14	7	2	0	0	0
0	0	0	0	1	1	7	6	9	**12**	6	13	8	15	**16**	8	9	3	4	3	10	2	1	0	0
0	0	0	0	0	2	4	6	**6**	3	8	14	11	6	**11**	12	14	9	14	10	5	1	0	0	0
0	0	0	0	1	2	9	8	**11**	8	11	9	11	10	**16**	7	15	6	6	7	1	0	1	0	0

AM Peak 0830 - 0930 (45), AM PHF=0.70 PM Peak 1415 - 1515 (59), PM PHF=0.92

* Saturday, April 13, 2013 - Total=280, 15 minute drops

0000	0100	0200	0300	0400	0500	0600	0700	0800	0900	1000	1100	1200	1300	1400	1500	1600	1700	1800	1900	2000	2100	2200	2300	
0	**0**	**0**	**1**	**4**	**6**	**3**	**8**	**30**	**6**	**28**	**19**	**25**	**38**	**17**	**8**	**26**	**25**	**15**	**12**	**5**	**3**	**1**	**0**	
0	0	0	1	1	1	1	1	6	5	2	**6**	5	6	11	0	8	9	2	6	2	1	1	0	-
0	0	0	0	2	1	1	3	8	0	**7**	6	8	4	6	0	7	8	6	0	1	1	0	0	-
0	0	0	0	0	3	1	2	4	0	**11**	1	6	12	0	3	6	7	3	4	1	0	0	0	-
0	0	0	0	1	1	0	2	12	1	**8**	6	6	16	0	5	5	1	4	2	1	1	0	0	-

AM Peak 1015 - 1115 (32), AM PHF=0.73

MetroCount Traffic Executive
Event Counts

2087 -- English (ENU)

Datasets:

Site:	**25.TECOLOTE RD (MORENA BLVD - I-5 NB RAMPS) EASTBOUND**
Input A:	2 - East bound. - Lane= 0, Added to totals. (/2.000)
Input B:	4 - West bound. - Lane= 0, Excluded from totals.
Survey Duration:	19:57 Monday, April 08, 2013 => 11:15 Monday, April 15, 2013
File:	092515Apr2013.EC0 (Plus)
Data type:	Axle sensors - Separate (Count)

Profile:

Filter time: **0:00 Tuesday, April 09, 2013 => 0:00 Sunday, April 14, 2013**

* Tuesday, April 09, 2013=11759, 15 minute drops

0000	0100	0200	0300	0400	0500	0600	0700	0800	0900	1000	1100	1200	1300	1400	1500	1600	1700	1800	1900	2000	2100	2200	2300	
42	**32**	**29**	**19**	**32**	**82**	**246**	**678**	**813**	**664**	**697**	**721**	**790**	**789**	**879**	**976**	**986**	**1015**	**694**	**589**	**372**	**300**	**216**	**104**	
14	3	10	3	1	13	36	85	**200**	179	148	196	224	184	185	201	221	**272**	187	140	119	81	79	33	18
6	9	8	4	4	21	45	130	**184**	151	180	151	175	190	236	260	**251**	248	192	171	98	88	61	29	10
13	10	7	7	8	15	93	**218**	198	170	176	173	206	200	258	250	**245**	241	152	142	73	70	34	20	12
9	10	5	5	19	34	73	**246**	232	165	193	201	186	216	201	265	**269**	255	164	137	84	62	43	22	17

AM Peak 0730 - 0830 (847), AM PHF=0.86 PM Peak 1615 - 1715 (1037), PM PHF=0.95

* Wednesday, April 10, 2013=12103, 15 minute drops

0000	0100	0200	0300	0400	0500	0600	0700	0800	0900	1000	1100	1200	1300	1400	1500	1600	1700	1800	1900	2000	2100	2200	2300	
57	**39**	**30**	**13**	**22**	**81**	**253**	**634**	**827**	**716**	**712**	**808**	**838**	**814**	**914**	**897**	**1068**	**1086**	**747**	**563**	**400**	**296**	**181**	**113**	
18	9	8	6	4	13	39	85	162	**205**	166	192	183	227	215	189	223	**270**	187	140	101	80	48	41	22
10	7	13	0	2	12	54	122	**183**	167	191	209	216	160	215	235	281	**295**	211	151	110	73	52	29	19
12	14	7	3	7	25	69	178	**232**	155	159	177	204	217	245	220	**282**	281	192	132	95	77	42	24	16
17	9	3	4	9	32	91	249	**251**	190	196	231	236	210	239	254	**284**	240	158	140	95	67	40	20	11

AM Peak 0815 - 0915 (870), AM PHF=0.87 PM Peak 1630 - 1730 (1130), PM PHF=0.96

* Thursday, April 11, 2013=12233, 15 minute drops

0000	0100	0200	0300	0400	0500	0600	0700	0800	0900	1000	1100	1200	1300	1400	1500	1600	1700	1800	1900	2000	2100	2200	2300	
68	**32**	**27**	**17**	**31**	**92**	**222**	**709**	**809**	**694**	**748**	**748**	**800**	**814**	**926**	**963**	**1034**	**1050**	**763**	**652**	**376**	**317**	**231**	**117**	
22	8	6	3	3	9	42	87	**183**	182	154	162	209	186	214	203	238	**276**	212	145	100	74	71	32	16
19	10	9	4	10	18	47	125	**186**	160	205	196	216	193	221	233	263	**309**	202	176	94	92	63	39	24
16	12	6	3	5	26	61	**229**	187	167	218	173	175	219	249	283	**264**	250	190	160	101	79	40	27	22
11	3	6	7	13	39	73	**269**	254	186	173	218	201	216	243	245	**269**	215	159	171	81	73	58	19	20

AM Peak 0730 - 0830 (866), AM PHF=0.80 PM Peak 1630 - 1730 (1117), PM PHF=0.91

* Friday, April 12, 2013=12458, 15 minute drops

0000	0100	0200	0300	0400	0500	0600	0700	0800	0900	1000	1100	1200	1300	1400	1500	1600	1700	1800	1900	2000	2100	2200	2300	
82	**48**	**44**	**33**	**27**	**89**	**229**	**694**	**750**	**723**	**699**	**809**	**844**	**834**	**965**	**1004**	**1041**	**985**	**732**	**594**	**433**	**338**	**272**	**194**	
16	12	9	12	3	12	40	99	168	166	180	197	**217**	231	210	265	259	**258**	208	166	122	106	58	57	34
24	10	20	8	8	20	54	131	163	196	155	206	**207**	195	231	245	253	**271**	215	148	106	84	67	42	41
22	14	8	9	7	26	61	203	189	171	159	194	**211**	196	257	246	**258**	224	155	140	107	75	77	48	23
20	13	7	4	9	32	75	261	230	191	206	**213**	210	213	268	249	**272**	234	155	140	99	73	70	48	18

AM Peak 1145 - 1245 (847), AM PHF=0.98 PM Peak 1630 - 1730 (1058), PM PHF=0.97

* Saturday, April 13, 2013=10272, 15 minute drops

0000	0100	0200	0300	0400	0500	0600	0700	0800	0900	1000	1100	1200	1300	1400	1500	1600	1700	1800	1900	2000	2100	2200	2300	
115	**82**	**57**	**46**	**29**	**33**	**115**	**290**	**543**	**725**	**718**	**775**	**835**	**848**	**763**	**720**	**769**	**711**	**539**	**432**	**389**	**325**	**252**	**168**	
34	22	21	10	8	3	18	56	97	191	171	186	**225**	228	192	193	178	172	113	118	93	79	89	42	-
41	18	17	10	6	8	24	53	115	175	191	166	**223**	203	174	170	211	197	156	97	114	86	61	52	-
23	20	8	20	8	9	28	75	143	179	160	**212**	186	215	187	184	200	186	125	104	103	79	46	42	-
18	22	11	7	7	14	45	106	189	180	197	**213**	201	202	211	174	180	157	145	114	79	82	56	32	-

AM Peak 1130 - 1230 (872), AM PHF=0.97

MetroCount Traffic Executive
Event Counts

2088 -- English (ENU)

Datasets:

Site:	**25.TECOLOTE RD (MORENA BLVD - I-5 NB RAMPS) WESTBOUND**
Input A:	2 - East bound. - Lane= 0, Excluded from totals.
Input B:	4 - West bound. - Lane= 0, Added to totals. (/2.000)
Survey Duration:	19:57 Monday, April 08, 2013 => 11:15 Monday, April 15, 2013
File:	092515Apr2013.EC0 (Plus)
Data type:	Axle sensors - Separate (Count)

Profile:

Filter time:	**0:00 Tuesday, April 09, 2013 => 0:00 Sunday, April 14, 2013**

* Tuesday, April 09, 2013=11573, 15 minute drops

0000	0100	0200	0300	0400	0500	0600	0700	0800	0900	1000	1100	1200	1300	1400	1500	1600	1700	1800	1900	2000	2100	2200	2300	
34	**20**	**25**	**19**	**32**	**156**	**379**	**915**	**936**	**697**	**668**	**689**	**744**	**728**	**770**	**812**	**790**	**786**	**735**	**557**	**413**	**404**	**173**	**96**	
9	7	7	2	6	28	70	180	**312**	175	151	163	171	192	169	**208**	213	201	177	149	110	96	56	33	18
11	5	8	7	7	39	73	196	**209**	186	144	171	186	187	165	**208**	184	208	166	153	114	94	51	25	20
7	3	4	8	10	50	121	**255**	220	182	200	180	198	184	**179**	171	191	209	183	134	94	128	42	19	17
7	5	6	2	9	40	116	**285**	195	155	173	175	191	166	**257**	226	202	169	210	121	96	86	25	19	10

AM Peak 0730 - 0830 (1061), AM PHF=0.85 PM Peak 1430 - 1530 (851), PM PHF=0.83

* Wednesday, April 10, 2013=11728, 15 minute drops

0000	0100	0200	0300	0400	0500	0600	0700	0800	0900	1000	1100	1200	1300	1400	1500	1600	1700	1800	1900	2000	2100	2200	2300	
65	**40**	**24**	**22**	**38**	**144**	**361**	**903**	**919**	**736**	**663**	**734**	**739**	**771**	**747**	**833**	**830**	**827**	**658**	**670**	**447**	**310**	**160**	**93**	
18	12	5	4	6	16	57	190	**288**	228	174	188	165	207	151	223	**230**	221	176	195	111	105	54	34	10
20	9	6	9	6	37	83	208	**217**	169	146	178	200	202	204	201	**210**	228	163	181	110	75	47	25	10
17	11	9	6	15	42	97	**254**	209	175	190	186	196	173	185	204	**219**	196	168	173	101	60	36	22	11
10	8	4	4	11	49	125	**251**	205	165	154	183	179	189	207	**207**	172	183	151	122	126	70	24	12	14

AM Peak 0730 - 0830 (1009), AM PHF=0.88 PM Peak 1545 - 1645 (865), PM PHF=0.94

* Thursday, April 11, 2013=11775, 15 minute drops

0000	0100	0200	0300	0400	0500	0600	0700	0800	0900	1000	1100	1200	1300	1400	1500	1600	1700	1800	1900	2000	2100	2200	2300	
45	**25**	**16**	**21**	**41**	**141**	**385**	**908**	**915**	**706**	**674**	**754**	**778**	**755**	**808**	**834**	**892**	**877**	**687**	**559**	**402**	**279**	**162**	**114**	
10	7	3	7	5	17	76	179	**299**	194	169	178	208	190	190	229	**244**	248	170	142	121	87	47	36	19
10	4	5	3	11	26	84	**212**	210	168	172	170	209	196	190	177	**228**	195	168	161	99	68	55	33	21
11	8	8	4	9	42	110	**246**	211	186	149	202	197	199	184	232	**233**	235	192	132	89	71	30	26	19
14	6	0	7	16	57	116	**273**	197	158	185	204	165	171	244	**196**	188	200	157	125	94	53	30	19	14

AM Peak 0715 - 0815 (1028), AM PHF=0.86 PM Peak 1545 - 1645 (901), PM PHF=0.92

* Friday, April 12, 2013=12055, 15 minute drops

0000	0100	0200	0300	0400	0500	0600	0700	0800	0900	1000	1100	1200	1300	1400	1500	1600	1700	1800	1900	2000	2100	2200	2300	
73	**37**	**22**	**28**	**44**	**133**	**357**	**864**	**852**	**745**	**699**	**781**	**825**	**799**	**861**	**883**	**859**	**818**	**705**	**539**	**434**	**310**	**214**	**179**	
19	10	8	7	4	21	60	155	**233**	194	174	178	203	193	180	**234**	225	228	205	154	112	81	77	50	23
21	9	6	4	9	19	83	188	**212**	179	185	171	210	201	**224**	220	205	201	176	148	96	80	46	47	27
19	8	6	6	14	51	103	**262**	199	198	181	229	216	225	**214**	208	224	204	161	127	116	77	43	52	31
14	10	2	11	17	43	111	**260**	209	176	160	203	196	180	**244**	221	205	186	165	111	111	72	49	31	42

AM Peak 0730 - 0830 (965), AM PHF=0.92 PM Peak 1415 - 1515 (915), PM PHF=0.94

* Saturday, April 13, 2013=9788, 15 minute drops

0000	0100	0200	0300	0400	0500	0600	0700	0800	0900	1000	1100	1200	1300	1400	1500	1600	1700	1800	1900	2000	2100	2200	2300	
123	**107**	**47**	**39**	**29**	**60**	**165**	**277**	**483**	**600**	**674**	**822**	**820**	**742**	**709**	**817**	**685**	**598**	**580**	**390**	**323**	**321**	**231**	**153**	
23	26	17	10	6	8	28	52	115	122	164	209	**211**	164	157	203	177	135	196	94	73	103	70	41	-
27	29	11	12	3	9	43	64	106	154	175	205	**215**	195	184	216	172	131	146	104	85	71	41	41	-
31	30	7	9	6	22	42	83	113	158	184	**219**	204	184	170	208	172	166	118	100	84	75	62	39	-
42	22	12	9	14	21	52	80	149	166	152	**191**	191	199	198	190	165	166	120	93	82	72	58	32	-

AM Peak 1130 - 1230 (834), AM PHF=0.95

MetroCount Traffic Executive
Event Counts

2090 -- English (ENU)

Datasets:

Site:	**26.BUENOS AVE (SOUTH OF CUDAHY PL) NORTHBOUND**
Input A:	3 - South bound. - Lane= 0, Excluded from totals.
Input B:	1 - North bound. - Lane= 0, Added to totals. (/2.000)
Survey Duration:	15:04 Monday, April 08, 2013 => 10:19 Monday, April 15, 2013
File:	092615Apr2013.EC0 (Base)
Data type:	Axle sensors - Split (Count)

Profile:

Filter time: **0:00 Tuesday, April 09, 2013 => 0:00 Sunday, April 14, 2013**

* Tuesday, April 09, 2013=726, 15 minute drops

0000	0100	0200	0300	0400	0500	0600	0700	0800	0900	1000	1100	1200	1300	1400	1500	1600	1700	1800	1900	2000	2100	2200	2300	
0	**3**	**0**	**1**	**5**	**10**	**19**	**17**	**38**	**38**	**61**	**64**	**69**	**41**	**51**	**70**	**77**	**73**	**24**	**27**	**22**	**15**	**2**	**3**	
0	0	0	0	1	3	6	4	9	3	13	13	**24**	13	12	13	24	**22**	7	6	6	5	2	1	0
0	3	0	0	1	5	9	2	7	13	13	16	**17**	11	12	26	4	**20**	2	8	3	2	0	0	0
0	0	0	1	0	0	3	4	14	17	17	**17**	17	10	22	26	**29**	23	10	3	7	8	0	2	0
0	0	0	0	3	2	2	7	9	6	18	**18**	13	7	5	6	**21**	9	5	10	6	0	0	0	0

AM Peak 1130 - 1230 (75), AM PHF=0.79 PM Peak 1630 - 1730 (91), PM PHF=0.80

* Wednesday, April 10, 2013=628, 15 minute drops

0000	0100	0200	0300	0400	0500	0600	0700	0800	0900	1000	1100	1200	1300	1400	1500	1600	1700	1800	1900	2000	2100	2200	2300	
0	**0**	**1**	**5**	**0**	**11**	**15**	**13**	**45**	**32**	**44**	**50**	**62**	**32**	**27**	**73**	**86**	**60**	**26**	**19**	**21**	**9**	**1**	**0**	
0	0	1	0	0	1	1	2	7	6	3	6	**24**	5	3	19	21	**24**	4	12	0	4	0	0	1
0	0	0	3	0	3	7	3	25	7	15	**10**	10	17	12	16	12	**13**	12	2	5	2	1	0	0
0	0	0	2	0	5	1	3	10	8	5	**25**	13	7	6	20	**31**	14	4	5	1	1	0	0	2
0	0	0	0	0	2	6	5	4	12	21	**9**	15	4	6	19	**23**	10	6	0	15	2	0	0	0

AM Peak 1115 - 1215 (68), AM PHF=0.69 PM Peak 1630 - 1730 (90), PM PHF=0.73

* Thursday, April 11, 2013=626, 15 minute drops

0000	0100	0200	0300	0400	0500	0600	0700	0800	0900	1000	1100	1200	1300	1400	1500	1600	1700	1800	1900	2000	2100	2200	2300	
3	**3**	**0**	**2**	**2**	**5**	**16**	**14**	**34**	**13**	**20**	**57**	**65**	**24**	**34**	**76**	**98**	**72**	**31**	**24**	**26**	**0**	**1**	**10**	
1	1	0	0	1	4	6	3	10	2	3	16	**30**	2	8	23	19	**29**	0	16	6	0	1	3	0
0	0	0	2	0	0	1	0	19	4	2	12	**13**	8	10	14	19	**20**	9	4	5	0	0	3	0
2	0	0	0	1	0	5	4	4	3	2	**17**	8	7	14	36	**34**	11	13	3	7	0	0	3	1
0	2	0	0	0	1	6	7	2	4	13	**12**	15	8	2	4	**27**	12	10	1	8	0	0	1	0

AM Peak 1130 - 1230 (71), AM PHF=0.60 PM Peak 1630 - 1730 (110), PM PHF=0.81

* Friday, April 12, 2013=657, 15 minute drops

0000	0100	0200	0300	0400	0500	0600	0700	0800	0900	1000	1100	1200	1300	1400	1500	1600	1700	1800	1900	2000	2100	2200	2300	
1	**3**	**0**	**2**	**6**	**9**	**14**	**16**	**28**	**49**	**34**	**56**	**68**	**69**	**53**	**64**	**54**	**32**	**38**	**16**	**20**	**6**	**17**	**6**	
0	0	0	0	0	3	2	0	8	10	11	13	**19**	**25**	13	31	10	15	20	6	3	3	9	2	0
0	0	0	0	2	1	7	0	5	6	3	15	**13**	8	12	8	9	8	7	4	8	0	5	2	0
1	0	0	2	0	5	1	4	5	20	6	12	**17**	18	12	19	29	6	7	1	7	1	2	2	5
0	3	0	0	4	1	4	12	11	13	15	**17**	**20**	18	17	7	6	3	4	5	2	2	1	0	6

AM Peak 1145 - 1245 (66), AM PHF=0.86 PM Peak 1215 - 1315 (74), PM PHF=0.74

* Saturday, April 13, 2013=241, 15 minute drops

0000	0100	0200	0300	0400	0500	0600	0700	0800	0900	1000	1100	1200	1300	1400	1500	1600	1700	1800	1900	2000	2100	2200	2300	
10	**6**	**2**	**4**	**3**	**0**	**2**	**9**	**19**	**17**	**18**	**16**	**22**	**11**	**15**	**16**	**10**	**13**	**17**	**8**	**12**	**7**	**6**	**4**	
0	4	0	0	0	0	0	0	0	**6**	1	2	3	5	4	8	1	7	3	7	4	2	2	0	-
0	1	1	0	0	0	2	1	**11**	4	8	4	0	3	3	3	1	3	2	0	8	4	0	3	-
5	1	1	2	2	0	0	4	**7**	0	4	6	9	2	2	1	4	2	7	1	0	0	4	1	-
6	0	0	3	1	0	0	4	**1**	8	5	4	10	1	6	4	4	1	5	0	0	1	0	0	-

AM Peak 0815 - 0915 (24), AM PHF=0.57

MetroCount Traffic Executive
Event Counts

2089 -- English (ENU)

Datasets:

Site:	**26.BUENOS AVE (SOUTH OF CUDAHY PL) SOUTHBOUND**
Input A:	3 - South bound. - Lane= 0, Added to totals. (/2.000)
Input B:	1 - North bound. - Lane= 0, Subtracted from totals. (/-2.000)
Survey Duration:	15:04 Monday, April 08, 2013 => 10:19 Monday, April 15, 2013
File:	092615Apr2013.EC0 (Base)
Data type:	Axle sensors - Split (Count)

Profile:

Filter time: **0:00 Tuesday, April 09, 2013 => 0:00 Sunday, April 14, 2013**

* Tuesday, April 09, 2013=544, 15 minute drops

0000	0100	0200	0300	0400	0500	0600	0700	0800	0900	1000	1100	1200	1300	1400	1500	1600	1700	1800	1900	2000	2100	2200	2300	
1	**1**	**1**	**1**	**3**	**2**	**24**	**57**	**69**	**59**	**53**	**16**	**54**	**42**	**45**	**24**	**29**	**20**	**20**	**13**	**9**	**4**	**0**	**1**	
0	0	1	0	1	0	5	12	**16**	11	15	0	11	**7**	14	7	5	3	6	6	4	1	0	0	0
0	1	0	0	0	1	5	13	**30**	26	12	6	12	**16**	10	6	4	7	2	2	1	0	0	0	0
1	0	0	0	0	0	5	**11**	9	10	19	3	**16**	8	12	9	10	6	9	3	3	3	0	1	0
0	0	0	1	2	2	9	**22**	15	13	8	8	**16**	11	10	3	10	4	3	2	2	0	0	0	0

AM Peak 0730 - 0830 (78), AM PHF=0.66 PM Peak 1230 - 1330 (54), PM PHF=0.84

* Wednesday, April 10, 2013=483, 15 minute drops

0000	0100	0200	0300	0400	0500	0600	0700	0800	0900	1000	1100	1200	1300	1400	1500	1600	1700	1800	1900	2000	2100	2200	2300	
0	**0**	**3**	**4**	**0**	**7**	**28**	**58**	**60**	**40**	**49**	**22**	**44**	**44**	**23**	**23**	**26**	**9**	**17**	**14**	**13**	**1**	**2**	**1**	
0	0	3	4	0	1	5	5	**17**	13	22	4	11	**19**	4	7	5	2	4	6	3	0	0	0	0
0	0	0	0	0	3	5	18	**19**	8	10	7	8	**9**	8	8	6	7	8	5	1	1	1	0	0
0	0	0	1	0	1	2	11	**16**	5	7	5	**14**	5	3	6	10	0	2	3	7	0	1	0	0
0	0	0	0	0	2	17	**24**	8	14	11	6	**12**	12	8	3	6	1	3	1	2	0	0	1	0

AM Peak 0745 - 0845 (75), AM PHF=0.80 PM Peak 1230 - 1330 (52), PM PHF=0.70

* Thursday, April 11, 2013=517, 15 minute drops

0000	0100	0200	0300	0400	0500	0600	0700	0800	0900	1000	1100	1200	1300	1400	1500	1600	1700	1800	1900	2000	2100	2200	2300	
0	**4**	**0**	**4**	**1**	**9**	**29**	**46**	**59**	**40**	**41**	**36**	**49**	**38**	**29**	**34**	**20**	**23**	**20**	**18**	**12**	**1**	**1**	**7**	
0	1	0	0	0	6	1	5	**30**	11	11	5	**18**	12	9	13	5	4	2	9	8	0	0	2	0
0	0	0	4	0	0	9	7	**13**	11	13	17	**11**	12	10	11	3	5	8	4	2	1	0	3	0
0	0	0	0	1	1	10	**20**	11	10	12	3	**11**	7	3	5	10	7	8	1	2	0	1	1	0
0	3	0	0	0	2	10	**14**	5	8	5	11	**11**	8	7	7	3	8	3	4	1	0	0	1	0

AM Peak 0730 - 0830 (77), AM PHF=0.64 PM Peak 1200 - 1300 (49), PM PHF=0.70

* Friday, April 12, 2013=517, 15 minute drops

0000	0100	0200	0300	0400	0500	0600	0700	0800	0900	1000	1100	1200	1300	1400	1500	1600	1700	1800	1900	2000	2100	2200	2300	
0	**5**	**0**	**2**	**1**	**4**	**18**	**57**	**67**	**43**	**48**	**37**	**61**	**22**	**18**	**26**	**25**	**16**	**21**	**14**	**9**	**11**	**12**	**6**	
0	0	0	0	0	2	0	7	**19**	21	13	12	**13**	5	7	9	7	7	8	5	2	4	4	1	0
0	0	0	2	0	1	4	13	**18**	7	18	14	**19**	6	5	6	9	2	3	1	3	1	4	2	0
0	0	0	0	0	1	6	**17**	13	8	10	2	**12**	8	4	8	6	5	9	3	2	5	2	2	0
0	5	0	0	1	0	8	**20**	17	7	7	9	**18**	4	2	4	3	3	2	5	2	1	2	1	2

AM Peak 0730 - 0830 (74), AM PHF=0.94 PM Peak 1200 - 1300 (61), PM PHF=0.82

* Saturday, April 13, 2013=190, 15 minute drops

0000	0100	0200	0300	0400	0500	0600	0700	0800	0900	1000	1100	1200	1300	1400	1500	1600	1700	1800	1900	2000	2100	2200	2300	
1	**1**	**0**	**5**	**1**	**2**	**4**	**6**	**14**	**24**	**22**	**12**	**13**	**17**	**8**	**14**	**10**	**11**	**13**	**4**	**5**	**4**	**2**	**1**	
0	1	0	1	0	1	0	2	2	1	**8**	3	4	3	3	4	2	4	0	1	2	1	0	0	-
0	0	0	0	1	1	2	2	4	**6**	5	5	1	4	2	5	3	2	5	0	3	2	1	1	-
0	0	0	4	0	0	0	0	4	**3**	3	4	5	2	2	2	4	2	2	2	0	0	1	0	-
2	0	0	0	0	0	2	2	4	**14**	7	0	4	8	1	3	1	3	6	1	0	1	0	0	-

AM Peak 0915 - 1015 (30), AM PHF=0.54

MetroCount Traffic Executive
Event Counts

2091 -- English (ENU)

Datasets:

Site:	**27.CUDAHY PL (EAST OF BUENOS AVE) EASTBOUND**
Input A:	2 - East bound. - Lane= 0, Added to totals. (/2.000)
Input B:	4 - West bound. - Lane= 0, Subtracted from totals. (/-2.000)
Survey Duration:	14:49 Monday, April 08, 2013 => 10:15 Monday, April 15, 2013
File:	092715Apr2013.EC0 (Base)
Data type:	Axle sensors - Split (Count)

Profile:

Filter time: **0:00 Tuesday, April 09, 2013 => 0:00 Sunday, April 14, 2013**

* Tuesday, April 09, 2013=585, 15 minute drops

0000	0100	0200	0300	0400	0500	0600	0700	0800	0900	1000	1100	1200	1300	1400	1500	1600	1700	1800	1900	2000	2100	2200	2300	
0	**0**	**4**	**3**	**2**	**16**	**14**	**25**	**39**	**39**	**43**	**75**	**59**	**41**	**50**	**74**	**57**	**27**	**11**	**6**	**0**	**0**	**0**	**5**	
0	0	4	3	0	0	4	5	8	12	6	13	**10**	10	18	**18**	9	18	7	2	0	0	0	3	0
0	0	0	0	0	4	4	14	8	9	23	24	**18**	14	7	**15**	18	4	2	2	0	0	0	3	0
0	0	0	0	1	9	6	2	17	12	8	13	**24**	9	17	**18**	20	3	1	2	0	0	0	0	0
0	0	0	0	1	4	0	4	6	7	7	**26**	8	8	9	**24**	11	2	1	0	0	0	0	0	0

AM Peak 1145 - 1245 (77), AM PHF=0.74 PM Peak 1500 - 1600 (74), PM PHF=0.78

* Wednesday, April 10, 2013=591, 15 minute drops

0000	0100	0200	0300	0400	0500	0600	0700	0800	0900	1000	1100	1200	1300	1400	1500	1600	1700	1800	1900	2000	2100	2200	2300	
0	**1**	**3**	**3**	**0**	**15**	**19**	**37**	**41**	**41**	**49**	**52**	**73**	**42**	**70**	**34**	**51**	**20**	**22**	**6**	**3**	**8**	**4**	**2**	
0	1	3	0	0	0	6	4	15	10	11	11	**22**	4	21	8	15	9	0	2	1	6	1	0	0
0	0	0	3	0	8	7	13	4	12	7	9	**15**	13	12	7	5	0	7	1	1	0	1	0	0
0	0	0	0	0	5	4	7	13	4	18	18	**21**	15	19	7	23	9	11	1	1	1	2	2	0
0	0	0	0	0	2	3	14	10	16	14	**14**	**16**	10	18	13	8	2	5	2	0	1	0	0	0

AM Peak 1145 - 1245 (71), AM PHF=0.82 PM Peak 1200 - 1300 (73), PM PHF=0.84

* Thursday, April 11, 2013=599, 15 minute drops

0000	0100	0200	0300	0400	0500	0600	0700	0800	0900	1000	1100	1200	1300	1400	1500	1600	1700	1800	1900	2000	2100	2200	2300	
0	**2**	**4**	**0**	**4**	**14**	**24**	**36**	**49**	**48**	**42**	**59**	**73**	**54**	**27**	**54**	**58**	**25**	**10**	**5**	**5**	**5**	**2**	**5**	
0	0	4	0	1	0	2	3	12	12	17	11	**13**	**20**	12	9	11	7	1	3	3	0	0	3	0
0	0	0	0	0	0	15	9	17	7	5	19	**20**	13	5	5	14	9	4	1	1	3	0	0	0
0	2	0	0	3	10	2	10	12	13	7	8	**28**	16	2	19	26	8	2	1	0	1	2	2	0
0	0	0	0	1	4	6	14	8	17	14	**22**	**13**	6	10	22	8	2	3	0	1	1	0	0	0

AM Peak 1145 - 1245 (82), AM PHF=0.74 PM Peak 1215 - 1315 (80), PM PHF=0.73

* Friday, April 12, 2013=610, 15 minute drops

0000	0100	0200	0300	0400	0500	0600	0700	0800	0900	1000	1100	1200	1300	1400	1500	1600	1700	1800	1900	2000	2100	2200	2300	
0	**0**	**4**	**4**	**8**	**10**	**22**	**50**	**44**	**38**	**62**	**125**	**52**	**31**	**38**	**66**	**30**	**11**	**5**	**1**	**4**	**3**	**3**	**2**	
0	0	4	0	0	0	6	18	6	3	21	**27**	18	9	15	**28**	8	4	5	0	4	1	3	0	0
0	0	0	0	5	1	9	12	12	19	11	**43**	13	7	2	**20**	4	1	1	0	0	2	0	0	0
0	0	0	4	0	7	5	13	16	4	17	**12**	9	10	**14**	9	9	4	0	0	0	0	0	1	0
0	0	0	0	3	2	3	8	11	13	14	**44**	13	7	**7**	10	9	2	0	1	0	0	0	1	0

AM Peak 1100 - 1200 (125), AM PHF=0.72 PM Peak 1430 - 1530 (68), PM PHF=0.61

* Saturday, April 13, 2013=118, 15 minute drops

0000	0100	0200	0300	0400	0500	0600	0700	0800	0900	1000	1100	1200	1300	1400	1500	1600	1700	1800	1900	2000	2100	2200	2300	
0	**0**	**1**	**0**	**2**	**0**	**1**	**8**	**11**	**19**	**12**	**15**	**10**	**8**	**5**	**6**	**6**	**5**	**0**	**3**	**5**	**5**	**1**	**0**	
0	0	0	0	2	0	0	4	4	**6**	1	7	3	3	2	2	4	2	0	1	1	0	0	0	-
0	0	1	0	0	0	1	3	3	**7**	8	4	2	0	0	1	0	1	0	1	3	3	0	0	-
0	0	0	0	0	0	0	0	2	**0**	4	3	4	1	1	1	1	2	0	1	1	0	1	0	-
0	0	0	0	0	0	0	1	2	**7**	0	2	1	4	3	2	2	0	0	0	0	2	0	0	-

AM Peak 0900 - 1000 (19), AM PHF=0.71

MetroCount Traffic Executive
Event Counts

2092 -- English (ENU)

Datasets:

Site:	**27.CUDAHY PL (EAST OF BUENOS AVE) WESTBOUND**
Input A:	2 - East bound. - Lane= 0, Excluded from totals.
Input B:	4 - West bound. - Lane= 0, Added to totals. (/2.000)
Survey Duration:	14:49 Monday, April 08, 2013 => 10:15 Monday, April 15, 2013
File:	092715Apr2013.EC0 (Base)
Data type:	Axle sensors - Split (Count)

Profile:

Filter time:	**0:00 Tuesday, April 09, 2013 => 0:00 Sunday, April 14, 2013**

* Tuesday, April 09, 2013=484, 15 minute drops

0000	0100	0200	0300	0400	0500	0600	0700	0800	0900	1000	1100	1200	1300	1400	1500	1600	1700	1800	1900	2000	2100	2200	2300	
5	**0**	**0**	**0**	**7**	**14**	**25**	**27**	**53**	**40**	**49**	**39**	**51**	**47**	**42**	**41**	**22**	**8**	**6**	**7**	**1**	**0**	**0**	**5**	
5	0	0	0	0	0	3	6	7	**10**	8	11	16	15	6	**11**	6	2	2	0	1	0	0	0	0
0	0	0	0	0	3	5	6	**21**	12	16	13	9	10	10	**18**	1	1	1	2	0	0	0	0	0
0	0	0	0	2	3	4	11	**13**	12	7	8	21	14	**11**	8	7	2	0	5	0	0	0	5	0
0	0	0	0	5	8	14	5	**13**	7	18	7	6	9	**15**	5	8	3	4	0	0	0	0	0	0

AM Peak 0815 - 0915 (57), AM PHF=0.69 PM Peak 1430 - 1530 (54), PM PHF=0.75

* Wednesday, April 10, 2013=551, 15 minute drops

0000	0100	0200	0300	0400	0500	0600	0700	0800	0900	1000	1100	1200	1300	1400	1500	1600	1700	1800	1900	2000	2100	2200	2300	
0	**4**	**2**	**6**	**5**	**17**	**23**	**41**	**39**	**51**	**58**	**57**	**68**	**45**	**53**	**23**	**25**	**11**	**7**	**14**	**4**	**1**	**0**	**0**	
0	4	2	0	0	0	0	10	14	7	20	14	**12**	2	10	7	9	2	0	3	0	0	0	0	0
0	0	0	6	0	5	3	9	6	17	8	4	**22**	6	18	4	1	0	2	4	3	0	0	0	5
0	0	0	0	2	7	8	16	9	11	11	**19**	**15**	22	9	8	9	5	3	0	0	1	0	0	0
0	0	0	0	3	5	13	7	10	17	20	**21**	**20**	15	17	4	6	5	2	7	1	0	0	0	0

AM Peak 1130 - 1230 (73), AM PHF=0.85 PM Peak 1200 - 1300 (68), PM PHF=0.79

* Thursday, April 11, 2013=493, 15 minute drops

0000	0100	0200	0300	0400	0500	0600	0700	0800	0900	1000	1100	1200	1300	1400	1500	1600	1700	1800	1900	2000	2100	2200	2300	
5	**1**	**2**	**0**	**6**	**17**	**40**	**59**	**41**	**40**	**30**	**34**	**60**	**38**	**32**	**35**	**20**	**15**	**6**	**4**	**1**	**5**	**3**	**2**	
0	0	0	0	3	0	21	12	**10**	6	5	7	**11**	10	5	14	3	4	2	0	0	1	0	0	0
5	0	0	0	0	4	3	5	**9**	12	9	8	**19**	13	11	4	6	5	2	2	0	3	0	0	0
0	0	2	0	0	5	8	**32**	16	9	6	13	**13**	13	9	7	10	1	0	0	0	0	1	2	0
0	1	0	0	3	8	9	**11**	6	13	12	6	**17**	3	9	10	1	5	2	2	1	1	2	0	0

AM Peak 0730 - 0830 (62), AM PHF=0.49 PM Peak 1200 - 1300 (60), PM PHF=0.78

* Friday, April 12, 2013=510, 15 minute drops

0000	0100	0200	0300	0400	0500	0600	0700	0800	0900	1000	1100	1200	1300	1400	1500	1600	1700	1800	1900	2000	2100	2200	2300	
0	**0**	**0**	**6**	**5**	**18**	**23**	**25**	**70**	**48**	**59**	**35**	**62**	**42**	**37**	**23**	**20**	**12**	**9**	**7**	**1**	**0**	**3**	**10**	
0	0	0	0	0	1	4	4	**20**	18	21	6	**19**	19	5	10	4	2	1	0	0	0	2	2	0
0	0	0	0	0	1	8	8	**17**	13	14	6	**13**	7	12	5	7	2	4	7	0	0	1	3	0
0	0	0	6	2	11	3	8	**18**	9	12	4	**9**	6	11	4	10	3	1	0	1	0	0	0	0
0	0	0	0	3	6	8	5	**16**	9	13	20	**22**	11	9	6	0	5	3	0	0	0	0	5	0

AM Peak 0800 - 0900 (70), AM PHF=0.90 PM Peak 1200 - 1300 (62), PM PHF=0.70

* Saturday, April 13, 2013=138, 15 minute drops

0000	0100	0200	0300	0400	0500	0600	0700	0800	0900	1000	1100	1200	1300	1400	1500	1600	1700	1800	1900	2000	2100	2200	2300	
0	**0**	**0**	**0**	**2**	**0**	**4**	**6**	**17**	**8**	**12**	**10**	**11**	**17**	**8**	**8**	**19**	**2**	**3**	**0**	**1**	**4**	**4**	**5**	
0	0	0	0	0	0	1	3	**6**	5	3	3	2	3	2	4	5	1	0	0	0	0	0	0	-
0	0	0	0	0	0	0	1	**3**	4	4	3	5	3	2	0	3	0	1	0	0	2	0	5	-
0	0	0	0	0	0	0	0	**2**	0	4	0	4	8	3	3	6	0	2	0	1	2	4	0	-
0	0	0	0	2	0	3	2	**6**	0	1	4	0	3	2	1	5	1	0	0	0	0	0	0	-

AM Peak 0800 - 0900 (17), AM PHF=0.69

MetroCount Traffic Executive
Event Counts

2093 -- English (ENU)

Datasets:

Site:	**28.SHERMAN ST (MORENA BLVD - GRANT ST) NORTHBOUND**
Input A:	1 - North bound. - Lane= 0, Added to totals. (/2.000)
Input B:	3 - South bound. - Lane= 0, Subtracted from totals. (/-2.000)
Survey Duration:	14:32 Monday, April 08, 2013 => 11:53 Monday, April 15, 2013
File:	092815Apr2013.EC0 (Regular)
Data type:	Axle sensors - Split (Count)

Profile:

Filter time: **0:00 Tuesday, April 09, 2013 => 0:00 Sunday, April 14, 2013**

* Tuesday, April 09, 2013=3840, 15 minute drops

0000	0100	0200	0300	0400	0500	0600	0700	0800	0900	1000	1100	1200	1300	1400	1500	1600	1700	1800	1900	2000	2100	2200	2300	
7	**6**	**3**	**4**	**32**	**54**	**95**	**193**	**226**	**234**	**268**	**279**	**333**	**297**	**265**	**389**	**398**	**279**	**213**	**99**	**102**	**36**	**22**	**11**	
5	4	1	3	3	21	9	44	51	46	82	66	**88**	77	68	83	**100**	103	68	32	22	5	14	5	0
0	1	0	0	5	2	23	42	69	53	70	89	**96**	74	50	**76**	75	59	57	21	43	16	6	5	3
1	1	2	0	8	11	32	46	56	64	66	53	**89**	71	46	**141**	123	63	54	26	18	7	2	1	0
1	1	0	1	17	20	32	63	51	72	51	**72**	61	75	102	**90**	101	54	34	20	20	8	1	1	3

AM Peak 1145 - 1245 (344), AM PHF=0.90 PM Peak 1515 - 1615 (407), PM PHF=0.72

* Wednesday, April 10, 2013=3935, 15 minute drops

0000	0100	0200	0300	0400	0500	0600	0700	0800	0900	1000	1100	1200	1300	1400	1500	1600	1700	1800	1900	2000	2100	2200	2300	
6	**3**	**7**	**18**	**14**	**50**	**159**	**236**	**196**	**219**	**271**	**302**	**305**	**369**	**331**	**388**	**374**	**242**	**174**	**116**	**97**	**34**	**10**	**16**	
0	1	0	0	1	12	34	51	48	40	83	68	**83**	102	78	105	**121**	84	70	35	27	14	0	3	1
3	2	3	0	3	8	36	41	51	52	65	**78**	73	94	95	84	**79**	61	41	43	33	4	5	12	1
0	0	4	6	2	9	32	77	54	71	63	**87**	83	80	82	106	**112**	45	44	23	13	9	3	0	0
3	0	0	12	9	21	58	68	44	57	60	**69**	66	94	77	**94**	62	52	20	16	25	8	3	2	2

AM Peak 1115 - 1215 (317), AM PHF=0.91 PM Peak 1545 - 1645 (406), PM PHF=0.84

* Thursday, April 11, 2013=3360, 15 minute drops

0000	0100	0200	0300	0400	0500	0600	0700	0800	0900	1000	1100	1200	1300	1400	1500	1600	1700	1800	1900	2000	2100	2200	2300	
4	**9**	**2**	**10**	**33**	**40**	**112**	**208**	**182**	**213**	**248**	**275**	**310**	**232**	**275**	**325**	**299**	**223**	**145**	**87**	**69**	**26**	**23**	**14**	
1	4	1	0	5	9	19	35	46	54	50	55	**82**	48	80	65	**77**	64	46	23	25	9	6	4	2
1	4	1	7	5	3	27	64	42	48	53	67	**90**	71	52	**96**	67	58	41	28	26	10	0	3	1
0	2	1	2	9	10	28	54	44	57	72	**74**	72	52	87	**89**	83	61	24	19	12	3	10	8	5
2	0	0	2	14	19	39	55	50	55	73	**80**	67	62	56	**76**	73	40	35	18	7	5	7	0	2

AM Peak 1130 - 1230 (325), AM PHF=0.90 PM Peak 1515 - 1615 (337), PM PHF=0.88

* Friday, April 12, 2013=3710, 15 minute drops

0000	0100	0200	0300	0400	0500	0600	0700	0800	0900	1000	1100	1200	1300	1400	1500	1600	1700	1800	1900	2000	2100	2200	2300	
9	**11**	**21**	**9**	**17**	**41**	**87**	**183**	**182**	**269**	**275**	**307**	**345**	**302**	**311**	**324**	**308**	**276**	**163**	**99**	**59**	**73**	**27**	**16**	
2	5	4	3	1	9	15	39	51	55	75	61	**104**	76	70	73	73	88	55	43	25	24	12	5	3
1	1	3	6	4	5	17	34	44	75	76	68	**87**	78	82	89	69	69	39	22	10	15	5	3	2
5	3	9	0	1	5	17	58	39	76	54	67	**69**	71	114	90	108	64	44	20	15	21	8	4	2
2	3	5	0	11	23	38	53	49	64	71	**112**	**86**	77	46	72	59	56	26	15	10	14	3	5	6

AM Peak 1145 - 1245 (371), AM PHF=0.83 PM Peak 1200 - 1300 (345), PM PHF=0.83

* Saturday, April 13, 2013=1998, 15 minute drops

0000	0100	0200	0300	0400	0500	0600	0700	0800	0900	1000	1100	1200	1300	1400	1500	1600	1700	1800	1900	2000	2100	2200	2300	
11	**6**	**14**	**9**	**16**	**20**	**30**	**74**	**112**	**135**	**139**	**204**	**175**	**231**	**219**	**149**	**135**	**115**	**83**	**60**	**27**	**22**	**4**	**14**	
3	3	1	0	3	3	5	11	29	23	37	**61**	49	62	64	34	36	21	36	10	8	5	0	1	-
2	1	5	5	4	8	9	14	23	25	28	**58**	48	70	45	42	26	34	25	24	7	11	2	5	-
2	0	4	3	4	1	11	28	22	34	35	**32**	54	55	59	38	37	34	15	11	10	4	0	1	-
6	2	4	2	5	9	6	22	39	53	40	**53**	25	46	52	35	37	27	8	16	3	3	2	7	-

AM Peak 1100 - 1200 (204), AM PHF=0.84

MetroCount Traffic Executive
Event Counts

2094 -- English (ENU)

Datasets:

Site:	**28.SHERMAN ST (MORENA BLVD - GRANT ST) SOUTHBOUND**
Input A:	1 - North bound. - Lane= 0, Excluded from totals.
Input B:	3 - South bound. - Lane= 0, Added to totals. (/2.000)
Survey Duration:	14:32 Monday, April 08, 2013 => 11:53 Monday, April 15, 2013
File:	092815Apr2013.EC0 (Regular)
Data type:	Axle sensors - Split (Count)

Profile:

Filter time: **0:00 Tuesday, April 09, 2013 => 0:00 Sunday, April 14, 2013**

* Tuesday, April 09, 2013=3203, 15 minute drops

0000	0100	0200	0300	0400	0500	0600	0700	0800	0900	1000	1100	1200	1300	1400	1500	1600	1700	1800	1900	2000	2100	2200	2300	
10	**12**	**9**	**4**	**36**	**54**	**188**	**263**	**258**	**272**	**263**	**247**	**286**	**258**	**231**	**250**	**189**	**139**	**106**	**50**	**40**	**18**	**19**	**9**	
7	6	9	0	7	11	23	68	85	66	**65**	71	**75**	71	55	70	47	44	34	21	13	1	9	1	5
0	0	0	0	9	8	35	65	73	45	**71**	64	**70**	47	48	52	53	32	26	6	11	9	7	2	4
1	5	0	0	9	16	40	62	50	**97**	73	54	**74**	73	62	65	48	31	27	18	11	3	2	5	0
2	1	0	4	11	20	91	69	51	**64**	55	58	**68**	67	66	63	42	33	20	6	6	5	1	1	3

AM Peak 0930 - 1030 (296), AM PHF=0.76 PM Peak 1200 - 1300 (286), PM PHF=0.96

* Wednesday, April 10, 2013=3454, 15 minute drops

0000	0100	0200	0300	0400	0500	0600	0700	0800	0900	1000	1100	1200	1300	1400	1500	1600	1700	1800	1900	2000	2100	2200	2300	
12	**19**	**4**	**19**	**20**	**69**	**200**	**274**	**239**	**305**	**255**	**275**	**253**	**305**	**250**	**279**	**207**	**192**	**121**	**80**	**52**	**13**	**9**	**9**	
5	10	2	2	0	13	34	65	74	63	**73**	56	47	**80**	69	59	55	42	29	27	28	5	1	1	1
4	3	2	0	7	11	56	70	54	**83**	50	60	75	**85**	71	59	50	42	33	21	10	1	2	3	1
0	5	0	6	8	15	48	69	62	**85**	59	93	45	**52**	46	83	54	45	32	14	9	5	5	4	1
3	1	0	11	6	32	63	70	49	**75**	74	67	87	**88**	65	78	49	64	28	18	5	3	2	1	7

AM Peak 0915 - 1015 (315), AM PHF=0.93 PM Peak 1300 - 1400 (305), PM PHF=0.87

* Thursday, April 11, 2013=3178, 15 minute drops

0000	0100	0200	0300	0400	0500	0600	0700	0800	0900	1000	1100	1200	1300	1400	1500	1600	1700	1800	1900	2000	2100	2200	2300	
10	**13**	**5**	**8**	**32**	**78**	**193**	**241**	**250**	**282**	**245**	**272**	**257**	**231**	**271**	**221**	**188**	**125**	**109**	**83**	**27**	**13**	**19**	**9**	
1	6	1	0	8	6	31	56	49	**71**	62	76	74	52	**70**	69	49	27	28	21	9	6	5	3	1
1	2	4	2	9	7	27	42	72	**65**	58	56	65	66	**69**	55	50	35	27	14	6	1	2	1	6
1	5	1	2	5	22	36	74	65	**66**	68	66	51	53	**58**	52	47	23	19	18	11	0	5	5	3
7	0	0	4	10	44	100	70	64	**80**	57	74	68	62	**75**	46	44	42	35	31	1	6	7	0	2

AM Peak 0900 - 1000 (282), AM PHF=0.88 PM Peak 1400 - 1500 (271), PM PHF=0.91

* Friday, April 12, 2013=3587, 15 minute drops

0000	0100	0200	0300	0400	0500	0600	0700	0800	0900	1000	1100	1200	1300	1400	1500	1600	1700	1800	1900	2000	2100	2200	2300	
12	**20**	**23**	**8**	**16**	**69**	**212**	**260**	**232**	**306**	**258**	**347**	**315**	**288**	**273**	**236**	**208**	**184**	**120**	**86**	**53**	**32**	**13**	**23**	
1	8	3	5	3	9	32	61	64	88	70	96	**92**	73	73	74	42	61	23	34	23	12	7	8	4
6	5	6	0	4	10	50	63	60	73	57	68	**78**	78	76	48	59	35	37	12	13	9	4	9	3
3	4	11	4	7	15	33	64	46	66	56	**87**	**67**	68	66	43	50	38	27	14	10	9	3	3	2
2	3	3	0	2	36	97	73	63	80	75	**98**	**79**	70	58	71	57	50	33	27	7	3	0	4	7

AM Peak 1130 - 1230 (354), AM PHF=0.91 PM Peak 1200 - 1300 (315), PM PHF=0.86

* Saturday, April 13, 2013=2278, 15 minute drops

0000	0100	0200	0300	0400	0500	0600	0700	0800	0900	1000	1100	1200	1300	1400	1500	1600	1700	1800	1900	2000	2100	2200	2300	
16	**11**	**11**	**11**	**18**	**20**	**67**	**102**	**116**	**157**	**214**	**216**	**256**	**249**	**184**	**181**	**136**	**110**	**86**	**60**	**23**	**25**	**5**	**10**	
4	6	5	0	4	1	14	19	19	39	50	45	**68**	73	61	58	23	27	28	23	6	12	0	0	-
3	1	1	1	3	6	20	17	20	43	47	44	**79**	60	35	35	30	31	20	24	12	6	2	2	-
2	2	3	3	3	2	18	32	31	36	54	51	**62**	40	47	48	40	24	18	8	5	4	0	1	-
7	2	2	7	8	12	16	35	47	39	64	**77**	48	78	42	41	43	30	21	5	0	4	3	7	-

AM Peak 1145 - 1245 (285), AM PHF=0.90

MetroCount Traffic Executive
Event Counts

2095 -- English (ENU)

Datasets:

Site:	**29.LINDA VISTA RD (MORENA BLVD - NAPA ST) EASTBOUND**
Input A:	2 - East bound. - Lane= 0, Added to totals. (/2.000)
Input B:	4 - West bound. - Lane= 0, Excluded from totals.
Survey Duration:	13:16 Monday, April 08, 2013 => 8:49 Monday, April 15, 2013
File:	092915Apr2013.EC0 (Base)
Data type:	Axle sensors - Separate (Count)

Profile:

Filter time: **0:00 Tuesday, April 09, 2013 => 0:00 Sunday, April 14, 2013**

* Tuesday, April 09, 2013=11149, 15 minute drops

0000	0100	0200	0300	0400	0500	0600	0700	0800	0900	1000	1100	1200	1300	1400	1500	1600	1700	1800	1900	2000	2100	2200	2300	
33	**25**	**17**	**16**	**68**	**314**	**400**	**742**	**822**	**631**	**580**	**606**	**732**	**694**	**724**	**784**	**797**	**961**	**707**	**465**	**396**	**315**	**198**	**127**	
15	5	5	4	5	48	59	143	166	**171**	142	141	181	166	181	185	200	**251**	177	126	109	76	67	33	20
6	7	1	5	11	97	101	191	**187**	146	172	153	212	166	192	198	201	**257**	182	126	103	84	50	34	16
6	6	6	2	18	92	93	229	**212**	159	145	142	174	169	186	195	184	**226**	158	97	99	76	37	24	13
6	7	5	5	34	78	147	180	**258**	156	121	171	165	193	166	207	213	**228**	191	116	86	79	44	36	9

AM Peak 0815 - 0915 (827), AM PHF=0.80 PM Peak 1700 - 1800 (961), PM PHF=0.93

* Wednesday, April 10, 2013=10812, 15 minute drops

0000	0100	0200	0300	0400	0500	0600	0700	0800	0900	1000	1100	1200	1300	1400	1500	1600	1700	1800	1900	2000	2100	2200	2300	
58	**32**	**27**	**17**	**54**	**201**	**394**	**680**	**804**	**684**	**577**	**564**	**717**	**678**	**676**	**818**	**831**	**861**	**700**	**443**	**323**	**321**	**233**	**124**	
20	11	11	6	9	23	65	141	191	**196**	138	122	182	173	155	185	211	**220**	180	110	76	82	78	38	17
16	7	7	2	11	57	86	143	**191**	154	148	152	189	182	162	206	226	**230**	159	128	87	85	65	38	17
13	4	5	2	13	47	97	207	**213**	160	126	125	156	139	177	216	178	**217**	175	112	90	67	49	24	12
9	10	4	7	21	74	146	190	**210**	175	166	166	190	184	183	211	**217**	195	187	93	71	88	42	24	13

AM Peak 0815 - 0915 (809), AM PHF=0.95 PM Peak 1645 - 1745 (883), PM PHF=0.96

* Thursday, April 11, 2013=11077, 15 minute drops

0000	0100	0200	0300	0400	0500	0600	0700	0800	0900	1000	1100	1200	1300	1400	1500	1600	1700	1800	1900	2000	2100	2200	2300	
59	**32**	**22**	**20**	**57**	**285**	**346**	**669**	**751**	**684**	**567**	**618**	**742**	**711**	**694**	**800**	**835**	**936**	**657**	**503**	**392**	**311**	**234**	**156**	
17	7	6	5	11	43	54	131	168	**215**	125	130	192	143	150	173	199	**274**	163	137	100	77	63	46	18
17	8	4	7	11	83	79	147	**178**	175	139	150	171	187	181	207	211	**243**	177	138	99	87	56	43	31
12	9	5	5	11	82	86	199	**174**	136	151	166	170	192	180	219	202	**215**	160	114	97	73	56	33	36
13	8	7	3	25	78	127	192	**232**	159	153	173	211	189	184	202	**224**	205	158	115	97	75	59	34	23

AM Peak 0815 - 0915 (798), AM PHF=0.86 PM Peak 1645 - 1745 (955), PM PHF=0.87

* Friday, April 12, 2013=11322, 15 minute drops

0000	0100	0200	0300	0400	0500	0600	0700	0800	0900	1000	1100	1200	1300	1400	1500	1600	1700	1800	1900	2000	2100	2200	2300	
108	**53**	**40**	**17**	**50**	**192**	**369**	**702**	**764**	**649**	**612**	**648**	**749**	**801**	**782**	**778**	**867**	**783**	**613**	**498**	**400**	**319**	**356**	**176**	
18	15	16	5	9	23	70	135	**166**	158	145	155	191	197	180	196	**215**	189	172	129	98	73	75	65	24
31	18	6	1	6	47	79	154	**201**	165	158	153	175	215	229	201	**230**	195	150	135	119	77	91	46	28
36	8	11	5	15	54	86	**220**	203	160	138	153	183	203	204	205	**197**	185	140	105	106	82	88	38	32
23	12	7	6	20	69	135	**194**	195	167	171	188	201	187	170	178	**226**	214	152	130	78	87	102	27	21

AM Peak 0730 - 0830 (780), AM PHF=0.89 PM Peak 1600 - 1700 (867), PM PHF=0.94

* Saturday, April 13, 2013=8513, 15 minute drops

0000	0100	0200	0300	0400	0500	0600	0700	0800	0900	1000	1100	1200	1300	1400	1500	1600	1700	1800	1900	2000	2100	2200	2300	
104	**87**	**81**	**37**	**26**	**69**	**101**	**256**	**550**	**485**	**572**	**636**	**709**	**652**	**624**	**595**	**629**	**542**	**408**	**351**	**303**	**292**	**256**	**153**	
24	19	30	9	6	9	7	44	98	131	138	141	**174**	145	142	142	184	152	88	87	86	67	72	44	-
28	31	31	6	7	14	26	60	129	142	134	148	**173**	186	154	151	165	130	100	94	65	81	74	45	-
32	18	12	7	7	28	22	54	151	101	152	**184**	165	167	155	139	147	138	110	79	79	76	61	36	-
21	19	8	15	6	19	47	99	173	112	149	**164**	197	154	174	164	134	122	110	91	74	68	49	29	-

AM Peak 1130 - 1230 (694), AM PHF=0.95

MetroCount Traffic Executive
Event Counts

2096 -- English (ENU)

Datasets:

Site:	**29.LINDA VISTA RD (MORENA BLVD - NAPA ST) WESTBOUND**
Input A:	2 - East bound. - Lane= 0, Excluded from totals.
Input B:	4 - West bound. - Lane= 0, Added to totals. (/2.000)
Survey Duration:	13:16 Monday, April 08, 2013 => 8:49 Monday, April 15, 2013
File:	092915Apr2013.EC0 (Base)
Data type:	Axle sensors - Separate (Count)

Profile:

Filter time: **0:00 Tuesday, April 09, 2013 => 0:00 Sunday, April 14, 2013**

* Tuesday, April 09, 2013=10917, 15 minute drops

0000	0100	0200	0300	0400	0500	0600	0700	0800	0900	1000	1100	1200	1300	1400	1500	1600	1700	1800	1900	2000	2100	2200	2300	
42	**17**	**19**	**26**	**53**	**178**	**349**	**717**	**634**	**498**	**523**	**550**	**761**	**692**	**731**	**800**	**794**	**929**	**736**	**571**	**488**	**491**	**201**	**122**	
16	0	1	3	6	26	75	144	169	116	109	130	**206**	175	179	187	216	**272**	204	174	142	133	70	47	22
9	5	0	6	11	33	66	182	139	126	110	129	**225**	187	172	188	209	**227**	176	152	118	161	47	24	11
8	6	14	5	18	41	90	173	171	133	141	145	**169**	163	195	192	196	**240**	192	119	118	114	48	29	8
10	6	4	13	19	78	119	218	155	124	163	**148**	161	167	186	234	174	**191**	165	127	111	84	37	22	9

AM Peak 1145 - 1245 (748), AM PHF=0.83 PM Peak 1700 - 1800 (929), PM PHF=0.86

* Wednesday, April 10, 2013=10783, 15 minute drops

0000	0100	0200	0300	0400	0500	0600	0700	0800	0900	1000	1100	1200	1300	1400	1500	1600	1700	1800	1900	2000	2100	2200	2300	
50	**26**	**45**	**27**	**50**	**163**	**328**	**661**	**662**	**503**	**508**	**584**	**659**	**662**	**727**	**810**	**822**	**953**	**759**	**634**	**467**	**336**	**218**	**136**	
22	9	7	4	8	20	62	139	**194**	126	124	132	151	173	139	261	225	**242**	211	201	111	90	76	40	16
11	4	13	7	9	31	69	152	**159**	116	139	170	199	197	171	188	205	**231**	161	169	105	83	59	30	18
8	10	15	5	11	58	88	**169**	150	124	134	158	163	145	220	183	194	**276**	170	148	127	73	50	32	15
9	3	10	11	22	54	110	**202**	160	138	111	124	147	148	198	179	199	**204**	218	116	124	91	34	35	12

AM Peak 0730 - 0830 (723), AM PHF=0.90 PM Peak 1700 - 1800 (953), PM PHF=0.86

* Thursday, April 11, 2013=11113, 15 minute drops

0000	0100	0200	0300	0400	0500	0600	0700	0800	0900	1000	1100	1200	1300	1400	1500	1600	1700	1800	1900	2000	2100	2200	2300	
60	**42**	**32**	**30**	**50**	**147**	**339**	**745**	**600**	**501**	**524**	**580**	**773**	**673**	**774**	**791**	**870**	**951**	**767**	**622**	**474**	**430**	**196**	**147**	
16	9	7	3	14	21	44	165	179	143	111	119	**181**	189	179	202	253	**245**	216	196	136	113	59	64	30
18	9	4	4	9	37	72	174	137	120	119	126	**208**	143	184	192	207	**225**	177	143	118	120	60	25	28
15	11	18	9	7	44	108	185	152	120	144	161	**209**	157	227	184	219	**263**	210	141	112	100	47	31	17
12	14	3	14	21	46	116	221	133	119	151	**175**	177	185	185	214	192	**219**	165	142	109	98	30	27	14

AM Peak 1145 - 1245 (771), AM PHF=0.92 PM Peak 1700 - 1800 (951), PM PHF=0.91

* Friday, April 12, 2013=11281, 15 minute drops

0000	0100	0200	0300	0400	0500	0600	0700	0800	0900	1000	1100	1200	1300	1400	1500	1600	1700	1800	1900	2000	2100	2200	2300	
88	**32**	**49**	**35**	**44**	**145**	**330**	**649**	**690**	**545**	**563**	**666**	**766**	**788**	**831**	**820**	**862**	**909**	**738**	**572**	**378**	**335**	**261**	**193**	
30	11	10	10	13	25	62	124	198	134	149	134	**199**	196	207	240	216	**255**	225	191	124	76	70	84	22
28	8	5	7	9	33	70	159	168	142	138	192	**211**	212	172	180	223	**226**	200	154	92	77	67	50	30
17	5	26	10	8	37	88	159	177	127	156	176	**199**	188	239	218	246	**235**	160	123	97	114	58	33	20
14	8	9	8	15	50	111	208	147	143	121	**164**	157	192	213	183	177	**194**	154	105	65	69	66	27	31

AM Peak 1145 - 1245 (773), AM PHF=0.92 PM Peak 1700 - 1800 (909), PM PHF=0.89

* Saturday, April 13, 2013=8535, 15 minute drops

0000	0100	0200	0300	0400	0500	0600	0700	0800	0900	1000	1100	1200	1300	1400	1500	1600	1700	1800	1900	2000	2100	2200	2300	
103	**88**	**82**	**32**	**58**	**81**	**149**	**225**	**391**	**526**	**491**	**620**	**689**	**632**	**623**	**729**	**688**	**576**	**443**	**394**	**310**	**286**	**198**	**129**	
22	26	20	10	18	19	28	48	75	130	131	151	**153**	173	141	213	184	159	125	103	102	95	58	49	-
30	23	11	12	13	17	41	45	91	120	104	157	**173**	162	150	183	182	140	129	79	73	56	43	27	-
20	24	30	4	10	20	41	64	122	141	133	161	**203**	157	174	184	172	147	104	101	57	76	54	24	-
31	16	22	6	17	25	39	69	104	135	125	**152**	161	140	158	149	150	131	85	111	79	60	44	29	-

AM Peak 1145 - 1245 (680), AM PHF=0.84

MetroCount Traffic Executive
Event Counts

2097 -- English (ENU)

Datasets:

Site:	**30.LINDA VISTA RD (NAPA ST - MARIAN WY) EASTBOUND**
Input A:	2 - East bound. - Lane= 0, Added to totals. (/2.000)
Input B:	0 - Unused or unknown. - Lane= 0, Excluded from totals.
Survey Duration:	12:58 Monday, April 08, 2013 => 11:22 Monday, April 15, 2013
File:	0930E15Apr2013.EC0 (Plus)
Data type:	Axle sensors - Separate (Count)

Profile:

Filter time: **0:00 Tuesday, April 09, 2013 => 0:00 Sunday, April 14, 2013**

* Tuesday, April 09, 2013=13313, 15 minute drops

0000	0100	0200	0300	0400	0500	0600	0700	0800	0900	1000	1100	1200	1300	1400	1500	1600	1700	1800	1900	2000	2100	2200	2300	
52	**32**	**13**	**18**	**27**	**243**	**372**	**971**	**1049**	**754**	**768**	**688**	**807**	**819**	**901**	**877**	**983**	**1166**	**889**	**573**	**490**	**410**	**271**	**145**	
21	5	3	7	1	40	49	159	214	**272**	183	138	230	181	212	209	255	**319**	233	154	149	99	94	37	23
9	11	1	6	0	72	78	244	**223**	153	241	182	227	219	276	200	211	**305**	236	153	108	105	70	40	17
7	6	6	2	8	86	114	313	**271**	160	213	170	188	187	224	220	219	**249**	191	129	112	107	56	27	13
15	10	3	3	18	46	131	255	**343**	170	131	198	163	233	190	248	**299**	294	229	138	121	99	52	41	16

AM Peak 0815 - 0915 (1108), AM PHF=0.81 PM Peak 1645 - 1745 (1171), PM PHF=0.92

* Wednesday, April 10, 2013=13046, 15 minute drops

0000	0100	0200	0300	0400	0500	0600	0700	0800	0900	1000	1100	1200	1300	1400	1500	1600	1700	1800	1900	2000	2100	2200	2300	
69	**64**	**34**	**16**	**34**	**121**	**320**	**842**	**954**	**785**	**668**	**685**	**856**	**780**	**849**	**1026**	**956**	**1164**	**849**	**601**	**477**	**411**	**311**	**178**	
23	15	11	3	4	21	43	153	206	**214**	159	152	231	186	214	215	222	**302**	216	165	129	120	99	51	29
17	15	9	3	4	33	55	178	**230**	159	162	180	197	217	229	257	231	**315**	180	173	136	110	90	45	19
13	18	6	3	8	21	86	252	**261**	190	165	162	203	174	209	268	245	**282**	206	149	108	91	64	36	24
16	16	8	7	18	47	136	259	**258**	223	183	192	226	205	198	286	258	**266**	248	115	105	91	60	47	12

AM Peak 0815 - 0915 (962), AM PHF=0.92 PM Peak 1700 - 1800 (1164), PM PHF=0.93

* Thursday, April 11, 2013=13538, 15 minute drops

0000	0100	0200	0300	0400	0500	0600	0700	0800	0900	1000	1100	1200	1300	1400	1500	1600	1700	1800	1900	2000	2100	2200	2300	
84	**42**	**25**	**12**	**31**	**225**	**312**	**893**	**1062**	**848**	**719**	**662**	**833**	**844**	**860**	**926**	**978**	**1180**	**872**	**629**	**538**	**435**	**302**	**229**	
29	9	6	4	7	38	39	148	206	**296**	163	140	240	186	224	194	233	**329**	226	165	138	110	93	70	29
19	9	7	3	1	60	60	204	**248**	245	185	145	206	199	227	222	247	**295**	240	163	161	121	78	55	39
24	14	6	2	4	77	88	294	**284**	137	203	176	185	237	216	244	239	**298**	220	151	111	99	67	58	47
12	10	6	3	19	50	126	248	**325**	171	169	202	203	223	194	267	**260**	258	187	151	129	107	64	47	32

AM Peak 0815 - 0915 (1152), AM PHF=0.89 PM Peak 1645 - 1745 (1182), PM PHF=0.90

* Friday, April 12, 2013=13202, 15 minute drops

0000	0100	0200	0300	0400	0500	0600	0700	0800	0900	1000	1100	1200	1300	1400	1500	1600	1700	1800	1900	2000	2100	2200	2300	
147	**85**	**50**	**27**	**34**	**132**	**304**	**788**	**873**	**736**	**650**	**731**	**831**	**900**	**895**	**883**	**1011**	**1004**	**833**	**665**	**516**	**437**	**417**	**259**	
29	22	20	10	5	17	45	139	172	**193**	155	189	221	247	187	216	241	**226**	241	161	128	98	87	95	51
39	21	11	6	5	28	58	149	**208**	168	148	172	216	223	244	210	230	**274**	186	175	146	107	94	68	40
47	25	12	5	8	42	84	256	**233**	182	132	178	187	220	244	234	**281**	253	201	159	130	121	108	58	43
32	17	7	6	16	45	117	245	**261**	194	217	193	208	212	221	224	**260**	252	205	170	113	112	129	39	37

AM Peak 0815 - 0915 (894), AM PHF=0.86 PM Peak 1630 - 1730 (1040), PM PHF=0.93

* Saturday, April 13, 2013=10230, 15 minute drops

0000	0100	0200	0300	0400	0500	0600	0700	0800	0900	1000	1100	1200	1300	1400	1500	1600	1700	1800	1900	2000	2100	2200	2300	
171	**166**	**113**	**46**	**32**	**44**	**69**	**236**	**659**	**503**	**566**	**723**	**755**	**776**	**714**	**713**	**806**	**728**	**573**	**458**	**388**	**423**	**334**	**238**	
51	42	42	18	6	6	10	35	99	141	143	171	**199**	186	184	163	212	179	150	124	114	101	106	61	-
40	44	41	8	12	7	15	45	158	136	126	**176**	169	208	165	191	230	192	160	117	78	119	85	74	-
43	40	17	9	7	19	15	66	178	105	145	**190**	179	203	162	170	193	186	127	105	97	111	75	55	-
37	40	13	11	7	12	29	91	225	122	153	**187**	209	180	204	190	172	171	137	114	100	93	69	49	-

AM Peak 1115 - 1215 (751), AM PHF=0.95

MetroCount Traffic Executive
Event Counts

2099 -- English (ENU)

Datasets:

Site:	**30.LINDA VISTA RD (NAPA ST - MARIAN WY) WESTBOUND**
Input A:	4 - West bound. - Lane= 0, Added to totals. (/2.000)
Input B:	0 - Unused or unknown. - Lane= 0, Excluded from totals.
Survey Duration:	13:00 Monday, April 08, 2013 => 11:55 Monday, April 15, 2013
File:	0930W15Apr2013.EC0 (Base)
Data type:	Axle sensors - Separate (Count)

Profile:

Filter time: **0:00 Tuesday, April 09, 2013 => 0:00 Sunday, April 14, 2013**

* Tuesday, April 09, 2013=13051, 15 minute drops

0000	0100	0200	0300	0400	0500	0600	0700	0800	0900	1000	1100	1200	1300	1400	1500	1600	1700	1800	1900	2000	2100	2200	2300	
55	**18**	**17**	**18**	**47**	**150**	**330**	**811**	**679**	**551**	**608**	**603**	**907**	**740**	**867**	**967**	**1039**	**1136**	**858**	**763**	**744**	**723**	**273**	**151**	
23	3	2	1	8	24	53	160	186	134	119	124	**249**	188	192	233	351	**275**	221	258	189	179	103	63	34
14	5	0	7	7	30	69	192	174	141	127	132	**323**	197	193	231	244	**306**	211	198	197	257	62	33	29
10	6	13	4	17	33	94	207	184	136	161	163	**174**	189	263	214	224	**314**	209	150	185	153	58	26	11
8	4	2	6	15	63	115	253	136	140	202	**185**	161	167	220	290	220	**242**	218	157	174	135	51	29	11

AM Peak 1145 - 1245 (930), AM PHF=0.72 PM Peak 1700 - 1800 (1136), PM PHF=0.91

* Wednesday, April 10, 2013=13033, 15 minute drops

0000	0100	0200	0300	0400	0500	0600	0700	0800	0900	1000	1100	1200	1300	1400	1500	1600	1700	1800	1900	2000	2100	2200	2300	
85	**30**	**39**	**23**	**42**	**135**	**303**	**762**	**702**	**556**	**514**	**642**	**760**	**680**	**843**	**981**	**1114**	**1304**	**988**	**860**	**658**	**538**	**294**	**184**	
34	5	14	5	4	16	55	159	**190**	144	154	153	162	185	157	283	397	**308**	210	294	120	153	99	61	23
29	7	7	5	8	25	65	**167**	152	147	134	177	246	186	184	229	235	**350**	237	224	135	123	75	47	19
11	8	14	7	14	45	78	**187**	178	139	133	183	194	158	256	225	225	**381**	206	182	179	114	62	39	15
11	10	4	6	16	50	106	**249**	183	127	93	129	159	152	246	244	258	**266**	336	160	225	150	58	37	16

AM Peak 0715 - 0815 (793), AM PHF=0.80 PM Peak 1700 - 1800 (1304), PM PHF=0.86

* Thursday, April 11, 2013=13330, 15 minute drops

0000	0100	0200	0300	0400	0500	0600	0700	0800	0900	1000	1100	1200	1300	1400	1500	1600	1700	1800	1900	2000	2100	2200	2300	
73	**37**	**34**	**20**	**37**	**149**	**326**	**824**	**674**	**540**	**606**	**659**	**1035**	**715**	**882**	**913**	**1214**	**1301**	**875**	**791**	**641**	**563**	**257**	**169**	
23	9	14	3	13	20	48	174	201	143	131	151	**259**	188	227	218	425	**305**	234	250	177	146	86	66	45
19	7	4	3	6	26	69	189	162	146	125	125	**365**	195	212	186	287	**340**	197	180	148	162	71	38	42
15	9	13	6	5	45	80	224	162	121	168	182	**212**	155	243	233	256	**394**	224	167	163	137	50	36	22
16	12	3	8	13	58	130	238	149	131	183	**202**	199	177	201	277	248	**263**	220	194	154	120	51	30	25

AM Peak 1145 - 1245 (1038), AM PHF=0.71 PM Peak 1700 - 1800 (1301), PM PHF=0.83

* Friday, April 12, 2013=12791, 15 minute drops

0000	0100	0200	0300	0400	0500	0600	0700	0800	0900	1000	1100	1200	1300	1400	1500	1600	1700	1800	1900	2000	2100	2200	2300	
134	**45**	**43**	**24**	**39**	**136**	**321**	**742**	**718**	**559**	**607**	**732**	**1041**	**828**	**1031**	**940**	**980**	**1019**	**784**	**608**	**475**	**425**	**337**	**229**	
45	19	18	9	9	17	58	142	189	147	170	165	**238**	211	251	**250**	251	294	211	173	135	102	85	92	37
42	8	3	7	8	28	68	166	170	138	155	196	**340**	243	217	**242**	263	271	232	163	135	103	82	69	28
22	13	18	3	7	39	87	190	181	142	152	188	**257**	197	**297**	232	273	240	168	145	122	144	82	40	36
25	6	4	5	16	52	108	244	180	133	132	**183**	207	178	**266**	217	194	214	173	127	84	78	88	28	22

AM Peak 1145 - 1245 (1017), AM PHF=0.75 PM Peak 1430 - 1530 (1054), PM PHF=0.89

* Saturday, April 13, 2013=9528, 15 minute drops

0000	0100	0200	0300	0400	0500	0600	0700	0800	0900	1000	1100	1200	1300	1400	1500	1600	1700	1800	1900	2000	2100	2200	2300	
123	**102**	**75**	**34**	**50**	**66**	**148**	**280**	**455**	**563**	**516**	**639**	**727**	**726**	**683**	**823**	**740**	**633**	**499**	**436**	**397**	**384**	**280**	**155**	
37	24	27	15	11	17	26	50	102	134	134	153	**180**	173	135	233	199	144	161	109	105	134	68	48	-
28	33	12	9	11	9	35	53	97	123	99	164	**178**	163	171	214	181	166	120	83	94	82	70	38	-
36	21	28	4	11	19	47	87	130	150	138	174	**185**	181	196	205	191	194	125	123	85	90	69	31	-
22	24	8	7	17	21	40	90	126	157	145	**149**	185	210	182	172	169	130	93	122	113	79	74	38	-

AM Peak 1145 - 1245 (691), AM PHF=0.93

MetroCount Traffic Executive
Vehicle Counts

2109 -- English (ENU)

Datasets:

Site:	**31.RILEY ST (NAPA ST - LAUTETTA ST) EASTBOUND**
Direction:	6 - West bound A>B, East bound B>A. **Lane:** 0
Survey Duration:	12:11 Monday, April 08, 2013 => 11:21 Monday, April 15, 2013
File:	093115Apr2013.EC0 (Base)
Data type:	Axle sensors - Paired (Class/Speed/Count)

Profile:

Filter time:	**0:00 Tuesday, April 09, 2013 => 0:00 Sunday, April 14, 2013**
Included classes:	1, 2, 3, 4, 5, 6, 7, 8, 9, 10, 11, 12, 13
Direction:	East (bound)

* Tuesday, April 09, 2013 - Total=784, 15 minute drops

0000	0100	0200	0300	0400	0500	0600	0700	0800	0900	1000	1100	1200	1300	1400	1500	1600	1700	1800	1900	2000	2100	2200	2300	
1	**0**	**0**	**0**	**1**	**11**	**26**	**66**	**53**	**56**	**55**	**49**	**49**	**55**	**57**	**69**	**56**	**71**	**38**	**25**	**15**	**18**	**8**	**5**	
0	0	0	0	0	1	6	12	7	**24**	6	6	13	17	10	15	10	**23**	8	7	5	5	1	4	0
1	0	0	0	0	1	3	17	7	**16**	21	13	16	11	12	19	15	**22**	14	8	3	3	3	0	0
0	0	0	0	0	0	6	26	**15**	6	18	17	10	17	26	12	**10**	9	4	4	1	3	4	1	0
0	0	0	0	1	9	11	11	**24**	10	10	13	10	10	9	23	**21**	17	12	6	6	7	0	0	0

AM Peak 0830 - 0930 (79), AM PHF=0.82 PM Peak 1630 - 1730 (76), PM PHF=0.83

* Wednesday, April 10, 2013 - Total=821, 15 minute drops

0000	0100	0200	0300	0400	0500	0600	0700	0800	0900	1000	1100	1200	1300	1400	1500	1600	1700	1800	1900	2000	2100	2200	2300	
0	**0**	**1**	**1**	**2**	**8**	**25**	**62**	**96**	**89**	**48**	**41**	**58**	**46**	**54**	**36**	**65**	**63**	**60**	**29**	**18**	**9**	**5**	**5**	
0	0	0	0	0	1	6	13	16	**23**	18	8	12	13	11	12	19	**19**	13	9	5	2	3	0	0
0	0	0	0	0	1	3	13	7	**21**	12	8	18	13	17	5	21	**17**	8	6	4	2	1	3	0
0	0	0	1	0	1	5	17	**22**	16	10	13	11	9	14	8	9	**14**	8	7	5	3	1	0	0
0	0	1	0	2	5	11	19	**51**	29	8	12	17	11	12	11	**16**	13	31	7	4	2	0	2	0

AM Peak 0830 - 0930 (117), AM PHF=0.57 PM Peak 1645 - 1745 (66), PM PHF=0.87

* Thursday, April 11, 2013 - Total=852, 15 minute drops

0000	0100	0200	0300	0400	0500	0600	0700	0800	0900	1000	1100	1200	1300	1400	1500	1600	1700	1800	1900	2000	2100	2200	2300	
0	**2**	**1**	**0**	**1**	**5**	**29**	**59**	**57**	**83**	**66**	**50**	**76**	**80**	**71**	**49**	**52**	**54**	**38**	**36**	**15**	**11**	**12**	**5**	
0	0	1	0	0	1	8	8	14	**53**	15	9	24	20	**24**	13	13	20	12	8	4	4	2	1	2
0	2	0	0	0	1	5	18	10	**12**	19	18	21	**21**	21	7	15	13	7	16	3	4	4	1	0
0	0	0	0	0	0	3	20	**11**	9	21	10	11	**21**	10	11	16	15	7	10	4	0	3	2	0
0	0	0	0	1	3	13	13	**22**	9	11	13	20	**18**	16	18	8	6	12	2	4	3	3	1	3

AM Peak 0830 - 0930 (98), AM PHF=0.46 PM Peak 1315 - 1415 (84), PM PHF=0.88

* Friday, April 12, 2013 - Total=744, 15 minute drops

0000	0100	0200	0300	0400	0500	0600	0700	0800	0900	1000	1100	1200	1300	1400	1500	1600	1700	1800	1900	2000	2100	2200	2300	
5	**3**	**0**	**1**	**5**	**9**	**26**	**55**	**40**	**46**	**49**	**44**	**47**	**47**	**51**	**65**	**76**	**54**	**51**	**28**	**20**	**5**	**10**	**7**	
2	2	0	0	2	4	7	**11**	9	12	9	11	14	7	8	18	**24**	11	10	13	7	3	4	2	1
0	0	0	1	0	0	4	**16**	9	15	12	10	11	21	17	19	**15**	17	11	5	8	0	2	0	0
0	1	0	0	0	0	4	**11**	6	4	15	13	9	6	14	16	**26**	17	16	2	4	0	0	1	1
3	0	0	0	3	5	11	**17**	16	15	13	10	13	13	12	**12**	11	9	14	8	1	2	4	4	4

AM Peak 0700 - 0800 (55), AM PHF=0.81 PM Peak 1545 - 1645 (77), PM PHF=0.74

* Saturday, April 13, 2013 - Total=484, 15 minute drops

0000	0100	0200	0300	0400	0500	0600	0700	0800	0900	1000	1100	1200	1300	1400	1500	1600	1700	1800	1900	2000	2100	2200	2300	
6	**6**	**2**	**0**	**3**	**8**	**10**	**21**	**28**	**36**	**39**	**41**	**46**	**49**	**41**	**33**	**30**	**22**	**19**	**11**	**7**	**9**	**12**	**5**	
1	2	1	0	1	0	2	7	7	14	9	12	**12**	11	14	6	5	8	4	4	1	2	4	0	-
0	0	1	0	1	1	1	7	4	11	11	10	**6**	17	9	10	7	8	7	3	2	0	0	2	-
1	2	0	0	1	2	3	3	12	8	10	7	**15**	10	8	9	11	4	3	3	3	5	4	2	-
4	2	0	0	0	5	4	4	5	3	9	**12**	13	11	10	8	7	2	5	1	1	2	4	1	-

AM Peak 1145 - 1245 (45), AM PHF=0.75

MetroCount Traffic Executive
Vehicle Counts

2110 -- English (ENU)

Datasets:

Site: **31.RILEY ST (NAPA ST - LAUTETTA ST) WESTBOUND**
Direction: 6 - West bound A>B, East bound B>A. **Lane:** 0
Survey Duration: 12:11 Monday, April 08, 2013 => 11:21 Monday, April 15, 2013
File: 093115Apr2013.EC0 (Base)
Data type: Axle sensors - Paired (Class/Speed/Count)

Profile:

Filter time: **0:00 Tuesday, April 09, 2013 => 0:00 Sunday, April 14, 2013**
Included classes: 1, 2, 3, 4, 5, 6, 7, 8, 9, 10, 11, 12, 13
Direction: West (bound)

* Tuesday, April 09, 2013 - Total=885, 15 minute drops

0000	0100	0200	0300	0400	0500	0600	0700	0800	0900	1000	1100	1200	1300	1400	1500	1600	1700	1800	1900	2000	2100	2200	2300	
1	**1**	**1**	**0**	**2**	**6**	**18**	**31**	**35**	**34**	**39**	**47**	**82**	**70**	**56**	**64**	**93**	**113**	**80**	**48**	**35**	**17**	**3**	**9**	
0	0	1	0	0	1	8	6	8	10	12	15	**24**	12	14	20	37	**33**	24	18	9	6	0	6	1
0	0	0	0	0	3	2	5	6	8	4	9	**30**	29	13	11	17	**23**	20	12	5	5	2	0	1
1	1	0	0	2	1	3	15	14	8	5	9	**10**	17	13	13	19	**41**	27	9	10	2	1	3	0
0	0	0	0	0	1	5	5	7	8	18	**14**	18	12	16	20	**20**	16	9	9	11	4	0	0	1

AM Peak 1145 - 1245 (78), AM PHF=0.65 PM Peak 1645 - 1745 (117), PM PHF=0.71

* Wednesday, April 10, 2013 - Total=866, 15 minute drops

0000	0100	0200	0300	0400	0500	0600	0700	0800	0900	1000	1100	1200	1300	1400	1500	1600	1700	1800	1900	2000	2100	2200	2300	
3	**0**	**3**	**1**	**2**	**5**	**20**	**28**	**37**	**32**	**52**	**40**	**60**	**50**	**50**	**74**	**88**	**99**	**92**	**70**	**34**	**9**	**13**	**4**	
1	0	1	0	0	1	5	7	8	7	12	**13**	11	6	7	14	**42**	25	28	38	12	0	2	2	0
1	0	0	0	0	2	4	2	9	4	**16**	13	22	13	12	16	**13**	21	15	9	10	1	2	1	0
0	0	1	1	1	2	2	9	11	11	**12**	7	13	15	14	19	**26**	38	18	13	6	1	5	0	0
1	0	1	0	1	0	9	10	9	10	**12**	7	14	16	17	**25**	7	15	31	10	6	7	4	1	0

AM Peak 1015 - 1115 (53), AM PHF=0.83 PM Peak 1545 - 1645 (106), PM PHF=0.63

* Thursday, April 11, 2013 - Total=935, 15 minute drops

0000	0100	0200	0300	0400	0500	0600	0700	0800	0900	1000	1100	1200	1300	1400	1500	1600	1700	1800	1900	2000	2100	2200	2300	
0	**0**	**0**	**1**	**2**	**4**	**14**	**34**	**38**	**33**	**46**	**62**	**80**	**85**	**65**	**76**	**107**	**97**	**72**	**51**	**29**	**23**	**10**	**6**	
0	0	0	0	0	0	5	6	12	8	6	7	**21**	19	15	28	**40**	25	26	24	6	11	1	3	0
0	0	0	0	1	1	1	8	9	6	11	16	**22**	22	12	18	**26**	14	16	13	7	6	2	0	2
0	0	0	0	1	2	4	10	7	10	18	15	**20**	20	16	11	**17**	42	12	8	9	4	4	1	1
0	0	0	1	0	1	4	10	10	9	11	**24**	17	24	22	19	**24**	16	18	6	7	2	3	2	0

AM Peak 1145 - 1245 (87), AM PHF=0.91 PM Peak 1600 - 1700 (107), PM PHF=0.67

* Friday, April 12, 2013 - Total=833, 15 minute drops

0000	0100	0200	0300	0400	0500	0600	0700	0800	0900	1000	1100	1200	1300	1400	1500	1600	1700	1800	1900	2000	2100	2200	2300	
3	**4**	**0**	**0**	**3**	**12**	**18**	**38**	**31**	**30**	**45**	**51**	**70**	**57**	**74**	**61**	**100**	**73**	**63**	**44**	**34**	**9**	**7**	**6**	
0	0	0	0	1	4	3	6	7	8	8	20	**17**	13	18	19	**30**	12	18	18	11	3	0	2	1
2	1	0	0	0	1	5	8	8	9	16	9	**30**	15	13	9	**21**	14	17	14	12	0	1	1	0
1	0	0	0	1	2	2	5	7	6	12	8	**15**	13	24	24	**35**	36	16	7	7	5	3	1	0
0	3	0	0	1	5	8	19	9	7	9	**14**	8	16	19	9	**14**	11	12	5	4	1	3	2	0

AM Peak 1145 - 1245 (76), AM PHF=0.63 PM Peak 1600 - 1700 (100), PM PHF=0.71

* Saturday, April 13, 2013 - Total=578, 15 minute drops

0000	0100	0200	0300	0400	0500	0600	0700	0800	0900	1000	1100	1200	1300	1400	1500	1600	1700	1800	1900	2000	2100	2200	2300	
1	**4**	**4**	**0**	**2**	**8**	**10**	**13**	**19**	**26**	**36**	**43**	**74**	**52**	**60**	**48**	**53**	**43**	**36**	**14**	**8**	**13**	**5**	**6**	
1	3	2	0	0	0	4	3	4	7	10	13	**11**	11	17	19	11	11	12	4	3	1	1	3	-
0	0	2	0	0	0	2	1	2	6	10	9	**14**	14	14	14	15	10	15	0	4	4	0	0	-
0	1	0	0	0	5	2	6	11	9	8	8	**28**	16	16	7	10	12	3	3	0	3	1	0	-
0	0	0	0	2	3	2	3	2	4	8	**13**	21	11	13	8	17	10	6	7	1	5	3	3	-

AM Peak 1145 - 1245 (66), AM PHF=0.59

MetroCount Traffic Executive
Event Counts

2105 -- English (ENU)

Datasets:

Site:	**32.FRIARS RD (NAPA ST - COLUSSA ST) EASTBOUND**
Input A:	2 - East bound. - Lane= 0, Added to totals. (/2.000)
Input B:	4 - West bound. - Lane= 0, Excluded from totals.
Survey Duration:	11:23 Monday, April 08, 2013 => 10:28 Monday, April 15, 2013
File:	93215Apr2013.EC0 (Base)
Data type:	Axle sensors - Separate (Count)

Profile:

Filter time: **0:00 Tuesday, April 09, 2013 => 0:00 Sunday, April 14, 2013**

* Tuesday, April 09, 2013=9821, 15 minute drops

0000	0100	0200	0300	0400	0500	0600	0700	0800	0900	1000	1100	1200	1300	1400	1500	1600	1700	1800	1900	2000	2100	2200	2300	
32	**16**	**11**	**4**	**11**	**69**	**274**	**555**	**529**	**535**	**520**	**523**	**583**	**514**	**557**	**599**	**944**	**1159**	**820**	**666**	**371**	**298**	**158**	**76**	
12	3	5	0	3	6	42	84	**122**	174	110	117	150	128	134	139	218	**308**	228	185	116	76	53	32	11
9	3	4	2	2	9	64	110	**122**	120	134	122	158	113	145	128	221	**288**	195	191	95	89	41	13	15
5	3	2	1	1	21	67	**175**	118	121	131	142	137	126	132	154	227	**285**	212	155	87	64	30	15	9
6	7	0	1	5	33	102	**187**	168	121	146	142	139	148	147	179	279	**279**	186	136	74	70	34	16	10

AM Peak 0730 - 0830 (605), AM PHF=0.81 PM Peak 1700 - 1800 (1159), PM PHF=0.94

* Wednesday, April 10, 2013=10025, 15 minute drops

0000	0100	0200	0300	0400	0500	0600	0700	0800	0900	1000	1100	1200	1300	1400	1500	1600	1700	1800	1900	2000	2100	2200	2300	
45	**20**	**13**	**8**	**9**	**71**	**275**	**537**	**486**	**532**	**522**	**595**	**579**	**535**	**577**	**683**	**954**	**1169**	**857**	**632**	**418**	**258**	**164**	**91**	
11	3	3	0	0	3	36	96	127	113	140	**159**	145	140	139	155	216	**306**	227	174	133	72	45	33	7
15	5	5	4	2	13	65	101	109	129	121	**135**	119	127	147	158	249	**306**	202	155	104	66	48	25	10
9	6	3	1	2	14	77	170	124	140	126	**160**	152	127	159	154	230	**279**	198	160	105	60	41	15	7
10	6	2	3	5	41	97	170	127	151	135	**142**	164	141	132	216	260	**279**	231	143	77	60	30	18	8

AM Peak 1100 - 1200 (595), AM PHF=0.93 PM Peak 1700 - 1800 (1169), PM PHF=0.96

* Thursday, April 11, 2013=10086, 15 minute drops

0000	0100	0200	0300	0400	0500	0600	0700	0800	0900	1000	1100	1200	1300	1400	1500	1600	1700	1800	1900	2000	2100	2200	2300	
32	**24**	**11**	**8**	**22**	**63**	**250**	**507**	**524**	**543**	**552**	**591**	**626**	**569**	**602**	**664**	**955**	**1169**	**860**	**655**	**370**	**260**	**154**	**80**	
7	4	5	3	6	8	34	93	117	153	127	150	**141**	137	152	155	219	**334**	207	191	125	71	51	26	14
10	8	1	4	5	14	46	121	122	121	136	136	**168**	139	130	150	232	**294**	234	167	89	71	28	25	17
7	8	5	1	6	17	71	142	120	116	164	153	**155**	160	147	167	257	**286**	223	165	79	66	52	15	14
8	4	0	0	5	24	100	152	166	153	126	**153**	162	134	174	193	248	**256**	197	132	78	52	23	14	11

AM Peak 1145 - 1245 (616), AM PHF=0.92 PM Peak 1700 - 1800 (1169), PM PHF=0.87

* Friday, April 12, 2013=10133, 15 minute drops

0000	0100	0200	0300	0400	0500	0600	0700	0800	0900	1000	1100	1200	1300	1400	1500	1600	1700	1800	1900	2000	2100	2200	2300	
56	**35**	**24**	**19**	**9**	**63**	**265**	**509**	**441**	**498**	**577**	**637**	**629**	**650**	**633**	**800**	**1069**	**975**	**779**	**612**	**344**	**236**	**180**	**98**	
14	11	11	4	3	10	39	95	102	130	162	**168**	135	187	152	201	254	**247**	219	159	107	71	49	26	28
17	12	8	6	0	7	65	100	111	105	118	**147**	177	168	154	184	221	**279**	200	164	77	71	54	21	22
14	5	3	7	2	15	66	147	94	112	145	**167**	159	128	155	192	**271**	260	173	146	99	41	44	29	21
11	7	2	2	4	31	95	168	136	151	152	**155**	159	167	173	223	**324**	190	188	144	61	54	33	22	24

AM Peak 1100 - 1200 (637), AM PHF=0.95 PM Peak 1630 - 1730 (1120), PM PHF=0.87

* Saturday, April 13, 2013=8216, 15 minute drops

0000	0100	0200	0300	0400	0500	0600	0700	0800	0900	1000	1100	1200	1300	1400	1500	1600	1700	1800	1900	2000	2100	2200	2300	
95	**60**	**39**	**13**	**11**	**19**	**80**	**180**	**333**	**475**	**626**	**672**	**637**	**653**	**650**	**612**	**635**	**639**	**540**	**430**	**346**	**217**	**160**	**98**	
28	20	13	5	2	4	9	40	56	81	148	**155**	131	161	161	174	168	158	143	129	92	63	52	27	-
22	19	9	6	2	1	16	42	73	126	155	**184**	175	170	158	130	163	168	128	113	101	44	41	28	-
21	9	8	1	4	6	21	33	80	111	168	**170**	166	171	174	134	151	157	148	77	91	43	30	21	-
24	12	9	1	3	8	34	65	125	158	156	**163**	166	151	158	174	153	157	121	113	63	68	38	22	-

AM Peak 1100 - 1200 (672), AM PHF=0.91

MetroCount Traffic Executive
Event Counts

2106 -- English (ENU)

Datasets:

Site:	**32.FRIARS RD (NAPA ST - COLUSSA ST) WESTBOUND**
Input A:	2 - East bound. - Lane= 0, Excluded from totals.
Input B:	4 - West bound. - Lane= 0, Added to totals. (/2.000)
Survey Duration:	11:23 Monday, April 08, 2013 => 10:28 Monday, April 15, 2013
File:	93215Apr2013.EC0 (Base)
Data type:	Axle sensors - Separate (Count)

Profile:

Filter time: **0:00 Tuesday, April 09, 2013 => 0:00 Sunday, April 14, 2013**

* Tuesday, April 09, 2013=9163, 15 minute drops

0000	0100	0200	0300	0400	0500	0600	0700	0800	0900	1000	1100	1200	1300	1400	1500	1600	1700	1800	1900	2000	2100	2200	2300	
23	**10**	**10**	**12**	**45**	**151**	**332**	**684**	**728**	**599**	**500**	**506**	**572**	**564**	**542**	**582**	**616**	**761**	**649**	**485**	**326**	**269**	**144**	**58**	
7	3	2	2	5	28	53	113	**177**	161	123	130	155	147	129	154	139	**200**	184	128	79	75	54	23	9
6	1	2	2	10	40	71	143	**174**	157	129	113	159	154	119	127	167	**184**	146	138	100	73	29	12	8
6	4	2	3	14	37	88	194	**196**	150	116	139	131	131	140	140	150	**195**	164	116	74	61	39	10	12
4	2	4	5	16	46	121	**235**	182	132	132	124	128	132	154	162	161	**183**	156	103	74	61	22	13	3

AM Peak 0745 - 0845 (780), AM PHF=0.83 PM Peak 1700 - 1800 (761), PM PHF=0.95

* Wednesday, April 10, 2013=9525, 15 minute drops

0000	0100	0200	0300	0400	0500	0600	0700	0800	0900	1000	1100	1200	1300	1400	1500	1600	1700	1800	1900	2000	2100	2200	2300	
32	**9**	**11**	**19**	**46**	**161**	**353**	**824**	**838**	**576**	**485**	**565**	**544**	**542**	**555**	**611**	**662**	**708**	**675**	**487**	**348**	**278**	**135**	**66**	
9	3	4	3	4	22	55	127	**229**	142	140	146	151	137	137	164	161	175	**188**	147	99	92	49	29	7
8	1	0	4	12	43	73	168	**213**	117	122	119	139	148	113	132	170	**190**	171	120	86	73	33	16	11
12	4	2	3	12	38	111	**248**	204	168	111	155	126	131	142	163	166	**191**	153	113	88	48	24	6	7
3	1	5	9	18	58	115	**282**	192	149	113	146	129	127	164	152	166	**153**	163	108	75	65	29	15	2

AM Peak 0730 - 0830 (971), AM PHF=0.86 PM Peak 1715 - 1815 (721), PM PHF=0.95

* Thursday, April 11, 2013=9207, 15 minute drops

0000	0100	0200	0300	0400	0500	0600	0700	0800	0900	1000	1100	1200	1300	1400	1500	1600	1700	1800	1900	2000	2100	2200	2300	
27	**25**	**8**	**10**	**57**	**149**	**322**	**712**	**727**	**494**	**504**	**537**	**605**	**564**	**542**	**574**	**626**	**770**	**655**	**500**	**339**	**251**	**138**	**76**	
7	8	2	2	10	20	50	136	**174**	128	139	127	164	144	125	123	161	**193**	166	152	97	81	41	22	18
11	5	1	2	8	45	68	138	**177**	124	115	132	147	134	134	144	139	**182**	168	120	100	68	41	27	6
7	9	3	1	15	36	92	197	**211**	117	139	139	141	139	149	154	158	**227**	162	116	72	52	27	17	11
2	3	2	5	24	49	112	**242**	167	125	112	139	153	148	135	154	169	**169**	159	113	70	50	29	10	7

AM Peak 0745 - 0845 (803), AM PHF=0.83 PM Peak 1700 - 1800 (770), PM PHF=0.85

* Friday, April 12, 2013=9414, 15 minute drops

0000	0100	0200	0300	0400	0500	0600	0700	0800	0900	1000	1100	1200	1300	1400	1500	1600	1700	1800	1900	2000	2100	2200	2300	
42	**15**	**4**	**13**	**45**	**151**	**338**	**647**	**748**	**501**	**541**	**580**	**601**	**604**	**601**	**656**	**733**	**703**	**588**	**452**	**321**	**270**	**170**	**94**	
18	5	0	3	9	25	53	108	**201**	124	145	128	167	146	139	155	190	**170**	178	142	87	80	56	31	17
6	1	0	3	12	34	72	135	**191**	128	124	151	139	174	141	168	150	**181**	144	99	96	73	53	20	14
11	2	1	1	9	43	83	**193**	165	128	133	156	150	133	161	172	178	**193**	130	111	70	64	38	23	19
7	7	3	6	15	49	131	**212**	192	122	139	145	146	153	161	162	**215**	159	137	101	68	54	23	20	13

AM Peak 0730 - 0830 (795), AM PHF=0.94 PM Peak 1645 - 1745 (759), PM PHF=0.88

* Saturday, April 13, 2013=7885, 15 minute drops

0000	0100	0200	0300	0400	0500	0600	0700	0800	0900	1000	1100	1200	1300	1400	1500	1600	1700	1800	1900	2000	2100	2200	2300	
62	**30**	**22**	**14**	**23**	**52**	**117**	**249**	**426**	**546**	**555**	**622**	**645**	**571**	**578**	**600**	**587**	**563**	**443**	**366**	**311**	**258**	**148**	**103**	
17	12	2	3	5	10	16	62	87	131	137	150	**160**	155	154	146	140	151	125	100	87	68	42	24	-
14	6	2	5	4	11	28	52	94	135	119	137	**153**	154	147	136	136	136	123	102	73	72	42	38	-
19	4	10	1	7	13	39	63	105	140	139	**184**	171	139	132	161	144	147	107	79	73	68	30	25	-
13	8	8	5	7	19	35	72	140	141	161	**151**	162	123	145	158	168	130	89	86	78	51	34	16	-

AM Peak 1130 - 1230 (648), AM PHF=0.88

MetroCount Traffic Executive
Event Counts

2101 -- English (ENU)

Datasets:

Site:	**33.FRIARS RD (WEST OF NAPA ST) EASTBOUND**
Input A:	2 - East bound. - Lane= 0, Added to totals. (/2.000)
Input B:	4 - West bound. - Lane= 0, Excluded from totals.
Survey Duration:	11:36 Monday, April 08, 2013 => 11:19 Monday, April 15, 2013
File:	093315Apr2013.EC0 (Base)
Data type:	Axle sensors - Separate (Count)

Profile:

Filter time: **0:00 Tuesday, April 09, 2013 => 0:00 Sunday, April 14, 2013**

* Tuesday, April 09, 2013=7054, 15 minute drops

0000	0100	0200	0300	0400	0500	0600	0700	0800	0900	1000	1100	1200	1300	1400	1500	1600	1700	1800	1900	2000	2100	2200	2300	
19	**7**	**6**	**1**	**26**	**80**	**116**	**566**	**586**	**392**	**426**	**348**	**370**	**365**	**447**	**461**	**658**	**789**	**499**	**385**	**215**	**149**	**91**	**57**	
10	2	2	0	2	20	16	62	113	**146**	104	67	103	99	132	90	153	**214**	132	109	71	40	24	22	9
4	2	3	1	7	22	33	132	**112**	80	144	69	97	81	123	122	138	**213**	134	103	60	31	27	10	10
1	2	1	0	3	18	26	202	**151**	88	100	99	89	87	93	101	154	**182**	108	93	43	38	22	11	5
4	1	0	0	14	20	41	170	**210**	79	78	113	82	98	101	148	**213**	181	126	80	42	40	18	14	4

AM Peak 0815 - 0915 (619), AM PHF=0.74 PM Peak 1645 - 1745 (821), PM PHF=0.96

* Wednesday, April 10, 2013=7231, 15 minute drops

0000	0100	0200	0300	0400	0500	0600	0700	0800	0900	1000	1100	1200	1300	1400	1500	1600	1700	1800	1900	2000	2100	2200	2300	
28	**27**	**11**	**6**	**18**	**67**	**122**	**476**	**495**	**398**	**378**	**403**	**430**	**387**	**448**	**511**	**696**	**808**	**591**	**386**	**239**	**146**	**96**	**66**	
9	5	2	0	1	11	12	78	**97**	80	101	122	102	97	139	127	149	**208**	152	110	88	36	23	22	8
10	5	5	4	9	17	35	84	**117**	93	80	97	99	101	128	110	168	**229**	133	93	59	42	30	17	7
5	10	3	1	4	12	30	**143**	129	104	100	87	111	92	108	131	164	**190**	142	99	48	36	22	14	6
4	7	1	1	4	27	45	**172**	153	121	97	97	119	98	74	144	**216**	182	164	84	45	32	21	13	3

AM Peak 0730 - 0830 (528), AM PHF=0.77 PM Peak 1645 - 1745 (842), PM PHF=0.92

* Thursday, April 11, 2013=7332, 15 minute drops

0000	0100	0200	0300	0400	0500	0600	0700	0800	0900	1000	1100	1200	1300	1400	1500	1600	1700	1800	1900	2000	2100	2200	2300	
24	**20**	**9**	**5**	**24**	**70**	**149**	**508**	**608**	**400**	**444**	**376**	**390**	**356**	**469**	**513**	**683**	**819**	**537**	**406**	**211**	**148**	**99**	**69**	
8	3	6	3	4	16	21	63	112	**126**	102	85	95	88	137	125	132	**223**	155	117	76	46	30	20	14
7	5	1	2	5	20	24	126	**114**	73	147	87	108	79	110	98	165	**207**	129	109	52	34	20	17	13
6	8	1	1	4	20	30	167	**161**	85	121	92	103	99	114	143	193	**197**	134	110	50	36	30	17	13
3	4	1	0	11	14	74	152	**221**	116	75	113	85	91	109	147	**194**	192	121	70	33	32	19	15	13

AM Peak 0815 - 0915 (621), AM PHF=0.70 PM Peak 1645 - 1745 (821), PM PHF=0.92

* Friday, April 12, 2013=6971, 15 minute drops

0000	0100	0200	0300	0400	0500	0600	0700	0800	0900	1000	1100	1200	1300	1400	1500	1600	1700	1800	1900	2000	2100	2200	2300	
53	**35**	**26**	**11**	**16**	**54**	**95**	**397**	**394**	**370**	**387**	**398**	**435**	**398**	**446**	**562**	**732**	**711**	**512**	**408**	**191**	**138**	**125**	**82**	
14	11	8	3	3	11	15	50	**71**	100	102	109	101	123	99	142	164	**202**	138	94	64	49	28	15	25
13	12	11	3	5	14	21	77	**93**	68	77	97	111	98	112	124	172	**181**	141	113	41	35	37	15	21
13	9	5	5	2	13	31	**129**	98	86	89	96	113	79	114	130	179	**193**	109	98	49	24	30	26	22
13	3	2	0	6	16	29	**141**	133	117	119	98	110	98	122	167	**217**	135	125	104	37	31	30	26	25

AM Peak 0730 - 0830 (433), AM PHF=0.77 PM Peak 1645 - 1745 (793), PM PHF=0.91

* Saturday, April 13, 2013=5687, 15 minute drops

0000	0100	0200	0300	0400	0500	0600	0700	0800	0900	1000	1100	1200	1300	1400	1500	1600	1700	1800	1900	2000	2100	2200	2300	
93	**75**	**43**	**7**	**9**	**18**	**49**	**127**	**259**	**301**	**404**	**418**	**404**	**453**	**451**	**445**	**452**	**434**	**367**	**296**	**260**	**125**	**122**	**82**	
25	20	19	4	2	2	6	23	40	52	102	**113**	76	94	101	106	109	105	98	95	68	24	46	20	-
21	24	12	2	3	4	14	39	64	84	91	**97**	115	121	116	98	110	118	93	71	74	29	20	23	-
22	15	7	1	1	5	12	22	65	69	**104**	97	106	137	104	90	109	100	92	54	78	29	27	21	-
25	16	5	0	3	7	17	43	90	96	**108**	111	107	102	130	152	125	111	85	77	40	43	29	18	-

AM Peak 1030 - 1130 (421), AM PHF=0.93

MetroCount Traffic Executive
Event Counts

2102 -- English (ENU)

Datasets:

Site:	**33.FRIARS RD (WEST OF NAPA ST) WESTBOUND**
Input A:	2 - East bound. - Lane= 0, Excluded from totals.
Input B:	4 - West bound. - Lane= 0, Added to totals. (/2.000)
Survey Duration:	11:36 Monday, April 08, 2013 => 11:19 Monday, April 15, 2013
File:	093315Apr2013.EC0 (Base)
Data type:	Axle sensors - Separate (Count)

Profile:

Filter time: **0:00 Tuesday, April 09, 2013 => 0:00 Sunday, April 14, 2013**

* Tuesday, April 09, 2013=593, 15 minute drops

0000	0100	0200	0300	0400	0500	0600	0700	0800	0900	1000	1100	1200	1300	1400	1500	1600	1700	1800	1900	2000	2100	2200	2300	
3	**0**	**0**	**0**	**0**	**3**	**9**	**23**	**27**	**27**	**40**	**40**	**66**	**42**	**56**	**47**	**60**	**49**	**39**	**26**	**18**	**12**	**7**	**4**	
0	0	0	0	0	0	2	4	6	5	13	7	**24**	6	14	14	14	8	11	11	3	3	2	1	2
2	0	0	0	0	1	1	4	7	7	5	10	**22**	15	7	9	21	10	12	5	8	3	1	1	1
0	0	0	0	0	2	4	7	7	8	10	11	**12**	11	18	13	14	19	9	3	2	3	3	0	1
1	0	0	0	0	1	3	8	7	7	13	**12**	**9**	11	18	12	12	13	8	8	5	4	2	2	0

AM Peak 1145 - 1245 (69), AM PHF=0.73 PM Peak 1200 - 1300 (66), PM PHF=0.70

* Wednesday, April 10, 2013=2023, 15 minute drops

0000	0100	0200	0300	0400	0500	0600	0700	0800	0900	1000	1100	1200	1300	1400	1500	1600	1700	1800	1900	2000	2100	2200	2300	
4	**1**	**1**	**0**	**0**	**1**	**28**	**201**	**158**	**99**	**89**	**108**	**114**	**113**	**124**	**143**	**150**	**188**	**158**	**122**	**91**	**80**	**38**	**20**	
2	0	0	0	0	0	1	33	**45**	23	31	36	30	22	31	42	50	**58**	45	49	21	26	12	6	6
1	1	0	0	0	1	2	**47**	44	16	21	23	28	35	23	27	37	**42**	41	25	23	22	10	8	1
1	0	0	0	0	0	9	**58**	38	32	17	27	33	25	29	35	38	**56**	29	22	26	14	9	3	1
0	0	1	0	0	1	17	**64**	32	28	21	23	23	31	41	40	26	**33**	43	27	21	18	7	4	2

AM Peak 0715 - 0815 (213), AM PHF=0.84 PM Peak 1700 - 1800 (188), PM PHF=0.82

* Thursday, April 11, 2013=1906, 15 minute drops

0000	0100	0200	0300	0400	0500	0600	0700	0800	0900	1000	1100	1200	1300	1400	1500	1600	1700	1800	1900	2000	2100	2200	2300	
10	**6**	**4**	**1**	**3**	**14**	**37**	**111**	**121**	**73**	**123**	**118**	**151**	**116**	**115**	**130**	**148**	**201**	**132**	**105**	**74**	**57**	**39**	**23**	
6	1	1	0	2	3	5	19	37	16	25	23	**38**	31	30	25	48	**50**	29	39	19	15	14	7	7
1	2	0	1	0	4	10	20	21	18	29	30	**40**	27	30	29	37	**46**	39	22	22	12	10	4	1
1	3	1	0	0	1	11	38	30	22	31	32	**42**	30	24	34	35	**67**	33	25	15	16	6	9	4
2	1	2	0	2	6	12	34	33	18	39	**33**	32	28	32	42	29	**39**	32	21	18	15	9	4	2

AM Peak 1145 - 1245 (152), AM PHF=0.92 PM Peak 1700 - 1800 (201), PM PHF=0.75

* Friday, April 12, 2013=1726, 15 minute drops

0000	0100	0200	0300	0400	0500	0600	0700	0800	0900	1000	1100	1200	1300	1400	1500	1600	1700	1800	1900	2000	2100	2200	2300	
13	**6**	**2**	**1**	**3**	**10**	**27**	**86**	**103**	**69**	**90**	**101**	**123**	**129**	**132**	**147**	**164**	**142**	**99**	**73**	**65**	**73**	**49**	**24**	
7	2	1	0	1	1	1	12	31	16	24	27	**41**	26	34	37	**46**	35	30	17	15	19	15	8	5
1	1	1	0	2	2	5	18	27	17	15	36	**28**	37	36	41	**24**	32	22	25	22	21	19	6	5
4	1	0	1	0	5	9	31	19	16	24	19	**29**	37	31	40	**44**	41	26	19	14	18	10	5	6
2	3	0	1	1	3	13	25	27	21	28	**20**	26	30	31	31	**51**	35	23	13	15	16	6	5	5

AM Peak 1145 - 1245 (117), AM PHF=0.72 PM Peak 1600 - 1700 (164), PM PHF=0.81

* Saturday, April 13, 2013=1512, 15 minute drops

0000	0100	0200	0300	0400	0500	0600	0700	0800	0900	1000	1100	1200	1300	1400	1500	1600	1700	1800	1900	2000	2100	2200	2300	
21	**9**	**9**	**2**	**3**	**6**	**12**	**29**	**55**	**83**	**114**	**122**	**119**	**132**	**112**	**118**	**108**	**111**	**82**	**70**	**73**	**57**	**41**	**29**	
5	4	5	1	2	1	1	6	10	20	30	**32**	29	34	34	31	29	26	24	13	21	16	9	6	-
5	2	1	0	0	2	4	7	11	19	26	**23**	26	37	26	28	21	29	17	24	16	16	13	11	-
6	1	4	0	1	1	6	7	19	25	32	**35**	31	32	25	29	26	33	20	19	14	10	7	8	-
5	3	0	1	1	3	2	9	16	20	27	**33**	35	29	28	31	33	24	21	15	23	16	14	5	-

AM Peak 1100 - 1200 (122), AM PHF=0.87

Morena Blvd Station Area Planning Study

Appendix C:

LOS Reports - Existing Conditions

Movement	WBL	WBR	NBT	NBR	SBL	SBT
Lane Configurations						
Volume (vph)	37	62	527	37	44	307
Ideal Flow (vphpl)	1900	1900	1900	1900	1900	1900
Total Lost time (s)	4.4		6.0		4.4	5.9
Lane Util. Factor	1.00		0.95		1.00	0.95
Frpb, ped/bikes	0.99		1.00		1.00	1.00
Flpb, ped/bikes	1.00		1.00		1.00	1.00
Frt	0.92		0.99		1.00	1.00
Flt Protected	0.98		1.00		0.95	1.00
Satd. Flow (prot)	1655		3499		1770	3539
Flt Permitted	0.98		1.00		0.95	1.00
Satd. Flow (perm)	1655		3499		1770	3539
Peak-hour factor, PHF	0.92	0.92	0.92	0.92	0.92	0.92
Adj. Flow (vph)	40	67	573	40	48	334
RTOR Reduction (vph)	62	0	2	0	0	0
Lane Group Flow (vph)	45	0	611	0	48	334
Confl. Peds. (#/hr)				3		
Confl. Bikes (#/hr)		2	6			4
Turn Type	Prot		NA		Prot	NA
Protected Phases	8		2		1	6
Permitted Phases						
Actuated Green, G (s)	5.7		49.9		4.4	58.8
Effective Green, g (s)	5.7		49.9		4.4	58.8
Actuated g/C Ratio	0.08		0.67		0.06	0.79
Clearance Time (s)	4.4		6.0		4.4	5.9
Vehicle Extension (s)	2.0		4.4		2.0	4.2
Lane Grp Cap (vph)	126		2334		104	2781
v/s Ratio Prot	c0.03		c0.17		c0.03	0.09
v/s Ratio Perm						
v/c Ratio	0.36		0.26		0.46	0.12
Uniform Delay, d1	32.8		5.0		34.1	1.9
Progression Factor	1.00		1.00		1.00	1.00
Incremental Delay, d2	0.6		0.3		1.2	0.1
Delay (s)	33.4		5.3		35.2	2.0
Level of Service	C		A		D	A
Approach Delay (s)	33.4		5.3			6.2
Approach LOS	C		A			A

Intersection Summary			
HCM 2000 Control Delay	8.3	HCM 2000 Level of Service	A
HCM 2000 Volume to Capacity ratio	0.29		
Actuated Cycle Length (s)	74.8	Sum of lost time (s)	14.8
Intersection Capacity Utilization	37.3%	ICU Level of Service	A
Analysis Period (min)	15		
c Critical Lane Group			

Movement	EBL	EBT	EBR	WBL	WBT	WBR	NBL	NBT	NBR	SBL	SBT	SBR
Lane Configurations												
Volume (vph)	250	336	0	0	837	657	34	0	311	0	0	0
Ideal Flow (vphpl)	1900	1900	1900	1900	1900	1900	1900	1900	1900	1900	1900	1900
Total Lost time (s)	5.0	5.0			5.0	5.0	5.5		5.5			
Lane Util. Factor	1.00	0.95			0.95	1.00	1.00		1.00			
Frpb, ped/bikes	1.00	1.00			1.00	1.00	1.00		0.99			
Flpb, ped/bikes	1.00	1.00			1.00	1.00	1.00		1.00			
Frt	1.00	1.00			1.00	0.85	1.00		0.85			
Flt Protected	0.95	1.00			1.00	1.00	0.95		1.00			
Satd. Flow (prot)	1770	3539			3539	1583	1770		1565			
Flt Permitted	0.95	1.00			1.00	1.00	0.95		1.00			
Satd. Flow (perm)	1770	3539			3539	1583	1770		1565			
Peak-hour factor, PHF	0.97	0.97	0.97	0.97	0.97	0.97	0.97	0.97	0.97	0.97	0.97	0.97
Adj. Flow (vph)	258	346	0	0	863	677	35	0	321	0	0	0
RTOR Reduction (vph)	0	0	0	0	0	401	0	0	0	0	0	0
Lane Group Flow (vph)	258	346	0	0	863	276	35	0	321	0	0	0
Confl. Peds. (#/hr)						6			1			
Confl. Bikes (#/hr)		4			1							
Turn Type	Prot	NA			NA	Prot	Prot		custom			
Protected Phases	7	4			8	8	2		2			
Permitted Phases									4			
Actuated Green, G (s)	12.9	41.7			23.8	23.8	6.1		47.8			
Effective Green, g (s)	12.9	41.7			23.8	23.8	6.1		47.8			
Actuated g/C Ratio	0.22	0.72			0.41	0.41	0.10		0.82			
Clearance Time (s)	5.0	5.0			5.0	5.0	5.5		5.5			
Vehicle Extension (s)	2.0	2.0			2.0	2.0	2.0		2.0			
Lane Grp Cap (vph)	391	2531			1444	646	185		1430			
v/s Ratio Prot	c0.15	0.10			c0.24	0.17	0.02		c0.02			
v/s Ratio Perm									0.18			
v/c Ratio	0.66	0.14			0.60	0.43	0.19		0.22			
Uniform Delay, d1	20.7	2.6			13.5	12.4	23.8		1.2			
Progression Factor	1.00	1.00			1.00	1.00	1.00		1.00			
Incremental Delay, d2	3.1	0.0			0.4	0.2	0.2		0.0			
Delay (s)	23.8	2.6			13.9	12.5	24.0		1.2			
Level of Service	C	A			B	B	C		A			
Approach Delay (s)		11.7			13.3			3.4			0.0	
Approach LOS		B			B			A			A	

Intersection Summary			
HCM 2000 Control Delay	11.5	HCM 2000 Level of Service	B
HCM 2000 Volume to Capacity ratio	0.58		
Actuated Cycle Length (s)	58.3	Sum of lost time (s)	15.5
Intersection Capacity Utilization	63.5%	ICU Level of Service	B
Analysis Period (min)	15		
c Critical Lane Group			

Movement	WBL	WBR	NBT	NBR	SBL	SBT
Lane Configurations						
Volume (vph)	85	36	526	149	13	333
Ideal Flow (vphpl)	1900	1900	1900	1900	1900	1900
Total Lost time (s)	4.9		5.3	5.3	4.4	5.0
Lane Util. Factor	0.97		0.95	1.00	1.00	0.95
Frpb, ped/bikes	0.99		1.00	0.98	1.00	1.00
Flpb, ped/bikes	1.00		1.00	1.00	1.00	1.00
Frt	0.96		1.00	0.85	1.00	1.00
Flt Protected	0.97		1.00	1.00	0.95	1.00
Satd. Flow (prot)	2980		3185	1393	1593	3185
Flt Permitted	0.97		1.00	1.00	0.95	1.00
Satd. Flow (perm)	2980		3185	1393	1593	3185
Peak-hour factor, PHF	0.90	0.90	0.90	0.90	0.90	0.90
Adj. Flow (vph)	94	40	584	166	14	370
RTOR Reduction (vph)	36	0	0	39	0	0
Lane Group Flow (vph)	98	0	584	127	14	370
Confl. Peds. (#/hr)				1		
Confl. Bikes (#/hr)		1	5	1		4
Turn Type	Prot		NA	Perm	Prot	NA
Protected Phases	8		2		1	6
Permitted Phases				2		
Actuated Green, G (s)	6.7		52.6	52.6	1.2	58.5
Effective Green, g (s)	6.7		52.6	52.6	1.2	58.5
Actuated g/C Ratio	0.09		0.70	0.70	0.02	0.78
Clearance Time (s)	4.9		5.3	5.3	4.4	5.0
Vehicle Extension (s)	2.0		4.2	4.2	2.0	4.0
Lane Grp Cap (vph)	265		2230	975	25	2480
v/s Ratio Prot	c0.03		c0.18		c0.01	0.12
v/s Ratio Perm				0.09		
v/c Ratio	0.37		0.26	0.13	0.56	0.15
Uniform Delay, d1	32.2		4.1	3.7	36.7	2.1
Progression Factor	1.00		1.00	1.00	1.00	1.00
Incremental Delay, d2	0.3		0.3	0.3	15.9	0.1
Delay (s)	32.5		4.4	4.0	52.6	2.2
Level of Service	C		A	A	D	A
Approach Delay (s)	32.5		4.3			4.0
Approach LOS	C		A			A

Intersection Summary			
HCM 2000 Control Delay	7.2	HCM 2000 Level of Service	A
HCM 2000 Volume to Capacity ratio	0.28		
Actuated Cycle Length (s)	75.1	Sum of lost time (s)	14.6
Intersection Capacity Utilization	28.6%	ICU Level of Service	A
Analysis Period (min)	15		
c Critical Lane Group			

Movement	EBL	EBT	EBR	WBL	WBT	WBR	NBL	NBT	NBR	SBL	SBT	SBR
Lane Configurations												
Volume (vph)	105	362	133	77	899	24	286	15	90	30	12	252
Ideal Flow (vphpl)	1900	1900	1900	1900	1900	1900	1900	1900	1900	1900	1900	1900
Total Lost time (s)	4.4	5.1	5.1	4.4	4.4		4.4	4.9		4.4	4.9	
Lane Util. Factor	1.00	0.95	1.00	1.00	0.95		1.00	1.00		1.00	1.00	
Frpb, ped/bikes	1.00	1.00	0.97	1.00	1.00		1.00	0.98		1.00	0.99	
Flpb, ped/bikes	1.00	1.00	1.00	1.00	1.00		1.00	1.00		1.00	1.00	
Frt	1.00	1.00	0.85	1.00	1.00		1.00	0.87		1.00	0.86	
Flt Protected	0.95	1.00	1.00	0.95	1.00		0.95	1.00		0.95	1.00	
Satd. Flow (prot)	1593	3185	1378	1593	3170		1593	1437		1593	1415	
Flt Permitted	0.95	1.00	1.00	0.95	1.00		0.95	1.00		0.95	1.00	
Satd. Flow (perm)	1593	3185	1378	1593	3170		1593	1437		1593	1415	
Peak-hour factor, PHF	0.98	0.98	0.98	0.98	0.98	0.98	0.98	0.98	0.98	0.98	0.98	0.98
Adj. Flow (vph)	107	369	136	79	917	24	292	15	92	31	12	257
RTOR Reduction (vph)	0	0	91	0	1	0	0	62	0	0	216	0
Lane Group Flow (vph)	107	369	45	79	940	0	292	45	0	31	53	0
Confl. Peds. (#/hr)			4			5			9			3
Confl. Bikes (#/hr)			3		2	1					2	1
Turn Type	Prot	NA	Perm	Prot	NA		Prot	NA		Prot	NA	
Protected Phases	7	4		3	8		5	2		1	6	
Permitted Phases			4									
Actuated Green, G (s)	8.1	26.9	26.9	7.2	26.7		16.2	26.6		2.7	13.1	
Effective Green, g (s)	8.1	26.9	26.9	7.2	26.7		16.2	26.6		2.7	13.1	
Actuated g/C Ratio	0.10	0.33	0.33	0.09	0.32		0.20	0.32		0.03	0.16	
Clearance Time (s)	4.4	5.1	5.1	4.4	4.4		4.4	4.9		4.4	4.9	
Vehicle Extension (s)	2.0	4.3	4.3	2.0	3.9		2.0	2.0		2.0	2.0	
Lane Grp Cap (vph)	156	1042	450	139	1029		313	465		52	225	
v/s Ratio Prot	c0.07	0.12		0.05	c0.30		c0.18	0.03		0.02	c0.04	
v/s Ratio Perm			0.03									
v/c Ratio	0.69	0.35	0.10	0.57	0.91		0.93	0.10		0.60	0.24	
Uniform Delay, d1	35.8	21.0	19.2	36.0	26.6		32.5	19.4		39.2	30.2	
Progression Factor	1.00	1.00	1.00	1.00	1.00		1.00	1.00		1.00	1.00	
Incremental Delay, d2	9.5	0.9	0.4	3.2	13.6		33.3	0.0		11.6	0.2	
Delay (s)	45.4	22.0	19.7	39.2	40.3		65.7	19.4		50.8	30.4	
Level of Service	D	C	B	D	D		E	B		D	C	
Approach Delay (s)		25.6			40.2			53.3			32.5	
Approach LOS		C			D			D			C	

Intersection Summary			
HCM 2000 Control Delay	37.6	HCM 2000 Level of Service	D
HCM 2000 Volume to Capacity ratio	0.76		
Actuated Cycle Length (s)	82.2	Sum of lost time (s)	18.8
Intersection Capacity Utilization	87.0%	ICU Level of Service	E
Analysis Period (min)	15		
c Critical Lane Group			

Movement	WBL	WBR	NBT	NBR	SBL	SBT
Lane Configurations						
Volume (vph)	88	71	629	103	59	339
Ideal Flow (vphpl)	1900	1900	1900	1900	1900	1900
Total Lost time (s)	5.1		5.4		4.4	5.3
Lane Util. Factor	1.00		0.95		1.00	0.95
Frpb, ped/bikes	1.00		1.00		1.00	1.00
Flpb, ped/bikes	1.00		1.00		1.00	1.00
Frt	0.94		0.98		1.00	1.00
Flt Protected	0.97		1.00		0.95	1.00
Satd. Flow (prot)	1703		3450		1770	3539
Flt Permitted	0.97		1.00		0.95	1.00
Satd. Flow (perm)	1703		3450		1770	3539
Peak-hour factor, PHF	0.95	0.95	0.95	0.95	0.95	0.95
Adj. Flow (vph)	93	75	662	108	62	357
RTOR Reduction (vph)	38	0	9	0	0	0
Lane Group Flow (vph)	130	0	761	0	62	357
Confl. Peds. (#/hr)				7	7	
Confl. Bikes (#/hr)			8			2
Parking (#/hr)				0		
Turn Type	Prot		NA		Prot	NA
Protected Phases	8		2		1	6
Permitted Phases						
Actuated Green, G (s)	8.5		24.8		4.0	33.3
Effective Green, g (s)	8.5		24.8		4.0	33.3
Actuated g/C Ratio	0.16		0.48		0.08	0.64
Clearance Time (s)	5.1		5.4		4.4	5.3
Vehicle Extension (s)	2.0		4.0		2.0	4.0
Lane Grp Cap (vph)	277		1639		135	2257
v/s Ratio Prot	c0.08		c0.22		c0.04	0.10
v/s Ratio Perm						
v/c Ratio	0.47		0.46		0.46	0.16
Uniform Delay, d1	19.8		9.2		23.1	3.8
Progression Factor	1.00		1.00		1.00	1.00
Incremental Delay, d2	0.5		0.3		0.9	0.0
Delay (s)	20.3		9.5		24.0	3.9
Level of Service	C		A		C	A
Approach Delay (s)	20.3		9.5			6.8
Approach LOS	C		A			A

Intersection Summary			
HCM 2000 Control Delay	10.0	HCM 2000 Level of Service	B
HCM 2000 Volume to Capacity ratio	0.46		
Actuated Cycle Length (s)	52.2	Sum of lost time (s)	14.9
Intersection Capacity Utilization	45.7%	ICU Level of Service	A
Analysis Period (min)	15		

c Critical Lane Group

Movement	WBL	WBR	NBT	NBR	SBL	SBT
Lane Configurations						
Volume (vph)	33	25	713	24	4	414
Ideal Flow (vphpl)	1900	1900	1900	1900	1900	1900
Total Lost time (s)	4.9		5.4		4.4	5.3
Lane Util. Factor	1.00		0.95		1.00	0.95
Frpb, ped/bikes	1.00		1.00		1.00	1.00
Flpb, ped/bikes	1.00		1.00		1.00	1.00
Frt	0.94		1.00		1.00	1.00
Flt Protected	0.97		1.00		0.95	1.00
Satd. Flow (prot)	1706		3518		1765	3539
Flt Permitted	0.97		1.00		0.95	1.00
Satd. Flow (perm)	1706		3518		1765	3539
Peak-hour factor, PHF	0.90	0.90	0.90	0.90	0.90	0.90
Adj. Flow (vph)	37	28	792	27	4	460
RTOR Reduction (vph)	26	0	2	0	0	0
Lane Group Flow (vph)	39	0	817	0	4	460
Confl. Peds. (#/hr)				6	6	
Confl. Bikes (#/hr)			8			5
Turn Type	Prot		NA		Prot	NA
Protected Phases	8		2		1	6
Permitted Phases						
Actuated Green, G (s)	3.5		30.5		0.8	35.8
Effective Green, g (s)	3.5		30.5		0.8	35.8
Actuated g/C Ratio	0.07		0.62		0.02	0.72
Clearance Time (s)	4.9		5.4		4.4	5.3
Vehicle Extension (s)	2.0		4.3		2.0	4.0
Lane Grp Cap (vph)	120		2167		28	2559
v/s Ratio Prot	c0.02		c0.23		0.00	c0.13
v/s Ratio Perm						
v/c Ratio	0.32		0.38		0.14	0.18
Uniform Delay, d1	21.9		4.8		24.0	2.2
Progression Factor	1.00		1.00		1.00	1.00
Incremental Delay, d2	0.6		0.2		0.9	0.0
Delay (s)	22.5		4.9		24.9	2.2
Level of Service	C		A		C	A
Approach Delay (s)	22.5		4.9			2.4
Approach LOS	C		A			A

Intersection Summary			
HCM 2000 Control Delay	4.9	HCM 2000 Level of Service	A
HCM 2000 Volume to Capacity ratio	0.38		
Actuated Cycle Length (s)	49.5	Sum of lost time (s)	14.7
Intersection Capacity Utilization	32.4%	ICU Level of Service	A
Analysis Period (min)	15		
c Critical Lane Group			

Movement	NBT	NBR	SBL	SBT	NWL	NWR
Lane Configurations						
Volume (vph)	450	21	92	334	8	280
Ideal Flow (vphpl)	1900	1900	1900	1900	1900	1900
Total Lost time (s)	5.5		5.5	5.5	5.5	5.5
Lane Util. Factor	0.95		1.00	0.95	1.00	1.00
Frpb, ped/bikes	1.00		1.00	1.00	1.00	0.98
Flpb, ped/bikes	1.00		1.00	1.00	1.00	1.00
Frt	0.99		1.00	1.00	1.00	0.85
Flt Protected	1.00		0.95	1.00	0.95	1.00
Satd. Flow (prot)	3512		1770	3539	1770	1553
Flt Permitted	1.00		0.95	1.00	0.95	1.00
Satd. Flow (perm)	3512		1770	3539	1770	1553
Peak-hour factor, PHF	0.88	0.88	0.88	0.88	0.88	0.88
Adj. Flow (vph)	511	24	105	380	9	318
RTOR Reduction (vph)	3	0	0	0	0	264
Lane Group Flow (vph)	532	0	105	380	9	54
Confl. Peds. (#/hr)		1	1			10
Confl. Bikes (#/hr)	5			5		
Turn Type	NA		Prot	NA	Prot	Perm
Protected Phases	2		1	6	8	
Permitted Phases						8
Actuated Green, G (s)	12.1		6.0	23.6	7.1	7.1
Effective Green, g (s)	12.1		6.0	23.6	7.1	7.1
Actuated g/C Ratio	0.29		0.14	0.57	0.17	0.17
Clearance Time (s)	5.5		5.5	5.5	5.5	5.5
Vehicle Extension (s)	2.0		2.0	2.0	2.0	2.0
Lane Grp Cap (vph)	1019		254	2002	301	264
v/s Ratio Prot	c0.15		c0.06	0.11	0.01	
v/s Ratio Perm						c0.03
v/c Ratio	0.52		0.41	0.19	0.03	0.21
Uniform Delay, d1	12.4		16.2	4.4	14.4	14.9
Progression Factor	1.00		1.00	1.00	1.00	1.00
Incremental Delay, d2	0.2		0.4	0.0	0.0	0.1
Delay (s)	12.6		16.6	4.4	14.4	15.0
Level of Service	B		B	A	B	B
Approach Delay (s)	12.6			7.1	15.0	
Approach LOS	B			A	B	

Intersection Summary			
HCM 2000 Control Delay	11.2	HCM 2000 Level of Service	B
HCM 2000 Volume to Capacity ratio	0.41		
Actuated Cycle Length (s)	41.7	Sum of lost time (s)	16.5
Intersection Capacity Utilization	40.7%	ICU Level of Service	A
Analysis Period (min)	15		
c Critical Lane Group			

Movement	EBL	EBT	EBR	WBL	WBT	WBR	NBL	NBT	NBR	SBL	SBT	SBR
Lane Configurations												
Volume (vph)	1	0	9	448	1	28	27	329	275	11	178	7
Ideal Flow (vphpl)	1900	1900	1900	1900	1900	1900	1900	1900	1900	1900	1900	1900
Total Lost time (s)		4.5			4.5			4.5	4.5		4.5	
Lane Util. Factor		1.00			1.00			1.00	1.00		1.00	
Frpb, ped/bikes		0.99			1.00			1.00	0.96		1.00	
Flpb, ped/bikes		1.00			1.00			1.00	1.00		1.00	
Frt		0.88			0.99			1.00	0.85		1.00	
Flt Protected		1.00			0.96			1.00	1.00		1.00	
Satd. Flow (prot)		1607			1761			1855	1518		1846	
Flt Permitted		0.97			0.73			0.97	1.00		0.97	
Satd. Flow (perm)		1569			1348			1801	1518		1799	
Peak-hour factor, PHF	0.86	0.86	0.86	0.86	0.86	0.86	0.86	0.86	0.86	0.86	0.86	0.86
Adj. Flow (vph)	1	0	10	521	1	33	31	383	320	13	207	8
RTOR Reduction (vph)	0	6	0	0	4	0	0	0	193	0	2	0
Lane Group Flow (vph)	0	5	0	0	551	0	0	414	127	0	226	0
Confl. Peds. (#/hr)	4		1	1		4	2		13	13		2
Confl. Bikes (#/hr)				2	3			2	1		1	
Turn Type	Perm	NA		Perm	NA		Perm	NA	Perm	Perm	NA	
Protected Phases		2			6			8			4	
Permitted Phases	2			6			8		8	4		
Actuated Green, G (s)		24.2			24.2			21.8	21.8		21.8	
Effective Green, g (s)		24.2			24.2			21.8	21.8		21.8	
Actuated g/C Ratio		0.44			0.44			0.40	0.40		0.40	
Clearance Time (s)		4.5			4.5			4.5	4.5		4.5	
Vehicle Extension (s)		2.0			2.0			2.0	2.0		2.0	
Lane Grp Cap (vph)		690			593			713	601		713	
v/s Ratio Prot												
v/s Ratio Perm		0.00			c0.41			c0.23	0.08		0.13	
v/c Ratio		0.01			0.93			0.58	0.21		0.32	
Uniform Delay, d1		8.7			14.6			13.0	10.9		11.5	
Progression Factor		1.00			1.00			1.00	1.00		1.00	
Incremental Delay, d2		0.0			20.6			3.4	0.8		1.2	
Delay (s)		8.7			35.1			16.4	11.7		12.6	
Level of Service		A			D			B	B		B	
Approach Delay (s)		8.7			35.1			14.4			12.6	
Approach LOS		A			D			B			B	

Intersection Summary			
HCM 2000 Control Delay	21.6	HCM 2000 Level of Service	C
HCM 2000 Volume to Capacity ratio	0.76		
Actuated Cycle Length (s)	55.0	Sum of lost time (s)	9.0
Intersection Capacity Utilization	66.8%	ICU Level of Service	C
Analysis Period (min)	15		
c Critical Lane Group			

Movement	EBL	EBT	EBR	WBL	WBT	WBR	NBL	NBT	NBR	SBL	SBT	SBR
Lane Configurations												
Volume (vph)	431	59	333	10	24	11	386	195	31	18	132	477
Ideal Flow (vphpl)	1900	1900	1900	1900	1900	1900	1900	1900	1900	1900	1900	1900
Total Lost time (s)	5.0	5.5	5.5	5.0	5.0		5.5	5.5			5.5	5.5
Lane Util. Factor	0.97	1.00	1.00	1.00	1.00		0.91	0.91			0.95	0.95
Frpb, ped/bikes	1.00	1.00	0.98	1.00	0.99		1.00	1.00			0.99	0.99
Flpb, ped/bikes	1.00	1.00	1.00	1.00	1.00		1.00	1.00			1.00	1.00
Frt	1.00	1.00	0.85	1.00	0.95		1.00	0.99			0.92	0.85
Flt Protected	0.95	1.00	1.00	0.95	1.00		0.95	0.98			1.00	1.00
Satd. Flow (prot)	3433	1863	1547	1770	1762		1610	3266			1610	1485
Flt Permitted	0.95	1.00	1.00	0.95	1.00		0.95	0.98			1.00	1.00
Satd. Flow (perm)	3433	1863	1547	1770	1762		1610	3266			1610	1485
Peak-hour factor, PHF	0.93	0.93	0.93	0.93	0.93	0.93	0.93	0.93	0.93	0.93	0.93	0.93
Adj. Flow (vph)	463	63	358	11	26	12	415	210	33	19	142	513
RTOR Reduction (vph)	0	0	263	0	11	0	0	6	0	0	37	240
Lane Group Flow (vph)	463	63	95	11	27	0	216	436	0	0	314	83
Confl. Peds. (#/hr)						5			12			
Confl. Bikes (#/hr)			2			1		5	1	1	1	1
Turn Type	Prot	NA	Perm	Prot	NA		Split	NA		Split	NA	Perm
Protected Phases	7	4		3	8		2	2		6	6	
Permitted Phases			4									6
Actuated Green, G (s)	15.7	21.1	21.1	0.7	6.6		15.8	15.8			20.3	20.3
Effective Green, g (s)	15.7	21.1	21.1	0.7	6.6		15.8	15.8			20.3	20.3
Actuated g/C Ratio	0.20	0.27	0.27	0.01	0.08		0.20	0.20			0.26	0.26
Clearance Time (s)	5.0	5.5	5.5	5.0	5.0		5.5	5.5			5.5	5.5
Vehicle Extension (s)	2.0	2.0	2.0	2.0	2.0		2.0	2.0			2.0	2.0
Lane Grp Cap (vph)	678	495	411	15	146		320	649			411	379
v/s Ratio Prot	c0.13	0.03		0.01	0.02		c0.13	0.13			c0.19	
v/s Ratio Perm			c0.06									0.06
v/c Ratio	0.68	0.13	0.23	0.73	0.18		0.68	0.67			0.76	0.22
Uniform Delay, d1	29.5	22.2	22.8	39.3	33.9		29.4	29.4			27.3	23.3
Progression Factor	1.00	1.00	1.00	1.00	1.00		1.00	1.00			1.00	1.00
Incremental Delay, d2	2.3	0.0	0.1	93.0	0.2		4.4	2.2			7.4	0.1
Delay (s)	31.8	22.2	22.9	132.2	34.1		33.8	31.6			34.7	23.4
Level of Service	C	C	C	F	C		C	C			C	C
Approach Delay (s)		27.5			56.1			32.3			29.3	
Approach LOS		C			E			C			C	

Intersection Summary			
HCM 2000 Control Delay	30.1	HCM 2000 Level of Service	C
HCM 2000 Volume to Capacity ratio	0.67		
Actuated Cycle Length (s)	79.4	Sum of lost time (s)	21.5
Intersection Capacity Utilization	63.0%	ICU Level of Service	B
Analysis Period (min)	15		
c Critical Lane Group			

Movement	EBL	EBT	EBR	WBL	WBT	WBR	NBL	NBT	NBR	SBL	SBT	SBR
Lane Configurations												
Volume (vph)	21	5	25	63	4	13	13	647	17	4	368	39
Ideal Flow (vphpl)	1900	1900	1900	1900	1900	1900	1900	1900	1900	1900	1900	1900
Total Lost time (s)		4.9			4.9		4.4	4.9		4.4	4.9	
Lane Util. Factor		1.00			1.00		1.00	1.00		1.00	1.00	
Frpb, ped/bikes		0.99			1.00		1.00	1.00		1.00	1.00	
Flpb, ped/bikes		1.00			1.00		1.00	1.00		1.00	1.00	
Frt		0.93			0.98		1.00	1.00		1.00	0.99	
Flt Protected		0.98			0.96		0.95	1.00		0.95	1.00	
Satd. Flow (prot)		1676			1737		1765	1854		1767	1831	
Flt Permitted		0.86			0.73		0.95	1.00		0.95	1.00	
Satd. Flow (perm)		1464			1324		1765	1854		1767	1831	
Peak-hour factor, PHF	0.91	0.91	0.91	0.91	0.91	0.91	0.91	0.91	0.91	0.91	0.91	0.91
Adj. Flow (vph)	23	5	27	69	4	14	14	711	19	4	404	43
RTOR Reduction (vph)	0	24	0	0	12	0	0	1	0	0	4	0
Lane Group Flow (vph)	0	31	0	0	75	0	14	729	0	4	443	0
Confl. Peds. (#/hr)	7		4	4		7	3		2	2		3
Confl. Bikes (#/hr)	1	4			2							
Turn Type	Perm	NA		Perm	NA		Prot	NA		Prot	NA	
Protected Phases		4			8		5	2		1	6	
Permitted Phases	4			8								
Actuated Green, G (s)		7.1			7.1		0.8	32.9		0.8	32.9	
Effective Green, g (s)		7.1			7.1		0.8	32.9		0.8	32.9	
Actuated g/C Ratio		0.13			0.13		0.01	0.60		0.01	0.60	
Clearance Time (s)		4.9			4.9		4.4	4.9		4.4	4.9	
Vehicle Extension (s)		2.0			2.0		2.0	2.0		2.0	2.0	
Lane Grp Cap (vph)		188			170		25	1109		25	1095	
v/s Ratio Prot							c0.01	c0.39		0.00	0.24	
v/s Ratio Perm		0.02			c0.06							
v/c Ratio		0.17			0.44		0.56	0.66		0.16	0.40	
Uniform Delay, d1		21.3			22.1		26.9	7.3		26.8	5.9	
Progression Factor		1.00			1.00		0.74	1.82		1.00	1.00	
Incremental Delay, d2		0.2			0.7		14.9	2.8		1.1	1.1	
Delay (s)		21.5			22.8		34.9	16.1		27.9	7.0	
Level of Service		C			C		C	B		C	A	
Approach Delay (s)		21.5			22.8			16.5			7.2	
Approach LOS		C			C			B			A	

Intersection Summary			
HCM 2000 Control Delay	14.0	HCM 2000 Level of Service	B
HCM 2000 Volume to Capacity ratio	0.62		
Actuated Cycle Length (s)	55.0	Sum of lost time (s)	14.2
Intersection Capacity Utilization	52.9%	ICU Level of Service	A
Analysis Period (min)	15		
c Critical Lane Group			

Movement	NBL	NBT	SBT	SBR	SEL	SER
Lane Configurations						
Volume (vph)	582	697	458	4	0	355
Ideal Flow (vphpl)	1900	1900	1900	1900	1900	1900
Total Lost time (s)	5.0	5.0	5.0			5.0
Lane Util. Factor	0.91	0.91	0.95			0.88
Frpb, ped/bikes	1.00	1.00	1.00			1.00
Flpb, ped/bikes	1.00	1.00	1.00			1.00
Frt	1.00	1.00	1.00			0.85
Flt Protected	0.95	0.99	1.00			1.00
Satd. Flow (prot)	1610	3357	3535			2787
Flt Permitted	0.95	0.99	1.00			1.00
Satd. Flow (perm)	1610	3357	3535			2787
Peak-hour factor, PHF	0.89	0.89	0.89	0.89	0.89	0.89
Adj. Flow (vph)	654	783	515	4	0	399
RTOR Reduction (vph)	0	0	2	0	0	122
Lane Group Flow (vph)	464	973	517	0	0	277
Confl. Peds. (#/hr)				1		
Confl. Bikes (#/hr)		2	2			8
Turn Type	Split	NA	NA			Prot
Protected Phases	2	2	4			6
Permitted Phases						
Actuated Green, G (s)	32.4	32.4	12.6			32.4
Effective Green, g (s)	32.4	32.4	12.6			32.4
Actuated g/C Ratio	0.59	0.59	0.23			0.59
Clearance Time (s)	5.0	5.0	5.0			5.0
Vehicle Extension (s)	2.0	2.0	2.0			2.0
Lane Grp Cap (vph)	948	1977	809			1641
v/s Ratio Prot	0.29	c0.29	c0.15			0.10
v/s Ratio Perm						
v/c Ratio	0.49	0.49	0.64			0.17
Uniform Delay, d1	6.5	6.5	19.1			5.2
Progression Factor	0.77	0.75	0.93			1.00
Incremental Delay, d2	1.7	0.8	1.2			0.0
Delay (s)	6.7	5.7	19.0			5.2
Level of Service	A	A	B			A
Approach Delay (s)		6.0	19.0		5.2	
Approach LOS		A	B		A	

Intersection Summary			
HCM 2000 Control Delay	8.7	HCM 2000 Level of Service	A
HCM 2000 Volume to Capacity ratio	0.53		
Actuated Cycle Length (s)	55.0	Sum of lost time (s)	10.0
Intersection Capacity Utilization	45.2%	ICU Level of Service	A
Analysis Period (min)	15		
c Critical Lane Group			

Movement	EBL	EBT	EBR	WBL	WBT	WBR	NBL	NBT	NBR	SBL	SBT	SBR
Lane Configurations												
Volume (vph)	3	1	0	3	4	5	14	458	8	10	362	0
Ideal Flow (vphpl)	1900	1900	1900	1900	1900	1900	1900	1900	1900	1900	1900	1900
Total Lost time (s)		5.5			5.5		5.5	5.5		5.5	5.5	
Lane Util. Factor		1.00			1.00		1.00	0.95		1.00	0.91	
Frpb, ped/bikes		1.00			1.00		1.00	1.00		1.00	1.00	
Flpb, ped/bikes		1.00			1.00		1.00	1.00		1.00	1.00	
Frt		1.00			0.94		1.00	1.00		1.00	1.00	
Flt Protected		0.96			0.99		0.95	1.00		0.95	1.00	
Satd. Flow (prot)		1795			1736		1770	3530		1770	5085	
Flt Permitted		1.00			1.00		0.95	1.00		0.95	1.00	
Satd. Flow (perm)		1863			1758		1770	3530		1770	5085	
Peak-hour factor, PHF	0.92	0.92	0.92	0.92	0.92	0.92	0.92	0.92	0.92	0.92	0.92	0.92
Adj. Flow (vph)	3	1	0	3	4	5	15	498	9	11	393	0
RTOR Reduction (vph)	0	0	0	0	5	0	0	1	0	0	0	0
Lane Group Flow (vph)	0	4	0	0	7	0	15	506	0	11	393	0
Confl. Bikes (#/hr)								7			8	3
Turn Type	Perm	NA		Perm	NA		Prot	NA		Prot	NA	
Protected Phases		4			8		5	2		1	6	
Permitted Phases	4			8								
Actuated Green, G (s)		0.8			0.8		1.3	20.2		0.8	19.7	
Effective Green, g (s)		0.8			0.8		1.3	20.2		0.8	19.7	
Actuated g/C Ratio		0.02			0.02		0.03	0.53		0.02	0.51	
Clearance Time (s)		5.5			5.5		5.5	5.5		5.5	5.5	
Vehicle Extension (s)		2.0			2.0		2.0	2.0		2.0	2.0	
Lane Grp Cap (vph)		38			36		60	1861		36	2615	
v/s Ratio Prot							0.01	c0.14		0.01	c0.08	
v/s Ratio Perm		0.00			c0.00							
v/c Ratio		0.11			0.20		0.25	0.27		0.31	0.15	
Uniform Delay, d1		18.4			18.4		18.0	5.0		18.5	4.9	
Progression Factor		1.00			1.00		1.00	1.00		1.00	1.00	
Incremental Delay, d2		0.4			1.0		0.8	0.0		1.8	0.0	
Delay (s)		18.8			19.4		18.8	5.0		20.2	4.9	
Level of Service		B			B		B	A		C	A	
Approach Delay (s)		18.8			19.4			5.4			5.3	
Approach LOS		B			B			A			A	

Intersection Summary			
HCM 2000 Control Delay	5.6	HCM 2000 Level of Service	A
HCM 2000 Volume to Capacity ratio	0.29		
Actuated Cycle Length (s)	38.3	Sum of lost time (s)	16.5
Intersection Capacity Utilization	25.4%	ICU Level of Service	A
Analysis Period (min)	15		

c Critical Lane Group

Movement	EBL	EBT	EBR	WBL	WBT	WBR	NBL	NBT	NBR	SBL	SBT	SBR
Lane Configurations												
Volume (vph)	4	13	16	11	25	8	94	473	39	20	335	11
Ideal Flow (vphpl)	1900	1900	1900	1900	1900	1900	1900	1900	1900	1900	1900	1900
Lane Width	11	11	12	12	12	12	12	12	12	12	12	12
Total Lost time (s)	4.9	4.9	4.9	4.9	4.9		4.4	4.9		4.4	4.9	
Lane Util. Factor	1.00	1.00	1.00	1.00	1.00		1.00	0.95		1.00	0.91	
Frpb, ped/bikes	1.00	1.00	0.99	1.00	1.00		1.00	1.00		1.00	1.00	
Flpb, ped/bikes	1.00	1.00	1.00	1.00	1.00		1.00	1.00		1.00	1.00	
Frt	1.00	1.00	0.85	1.00	0.96		1.00	0.99		1.00	1.00	
Flt Protected	0.95	1.00	1.00	0.95	1.00		0.95	1.00		0.95	1.00	
Satd. Flow (prot)	1711	1801	1561	1766	1795		1770	3493		1770	5059	
Flt Permitted	0.73	1.00	1.00	0.75	1.00		0.95	1.00		0.95	1.00	
Satd. Flow (perm)	1320	1801	1561	1390	1795		1770	3493		1770	5059	
Peak-hour factor, PHF	0.88	0.88	0.88	0.88	0.88	0.88	0.88	0.88	0.88	0.88	0.88	0.88
Adj. Flow (vph)	5	15	18	12	28	9	107	538	44	23	381	12
RTOR Reduction (vph)	0	0	16	0	8	0	0	3	0	0	2	0
Lane Group Flow (vph)	5	15	2	12	29	0	107	579	0	23	391	0
Confl. Peds. (#/hr)			3	3			1		1	1		1
Confl. Bikes (#/hr)								1			7	1
Turn Type	Perm	NA	Perm	Perm	NA		Prot	NA		Prot	NA	
Protected Phases		4			8		5	2		1	6	
Permitted Phases	4		4	8								
Actuated Green, G (s)	7.4	7.4	7.4	7.4	7.4		7.3	51.4		1.1	45.2	
Effective Green, g (s)	7.4	7.4	7.4	7.4	7.4		7.3	51.4		1.1	45.2	
Actuated g/C Ratio	0.10	0.10	0.10	0.10	0.10		0.10	0.69		0.01	0.61	
Clearance Time (s)	4.9	4.9	4.9	4.9	4.9		4.4	4.9		4.4	4.9	
Vehicle Extension (s)	2.0	2.0	2.0	2.0	2.0		2.0	3.6		2.0	4.3	
Lane Grp Cap (vph)	131	179	155	138	179		174	2422		26	3085	
v/s Ratio Prot		0.01			c0.02		c0.06	c0.17		0.01	0.08	
v/s Ratio Perm	0.00		0.00	0.01								
v/c Ratio	0.04	0.08	0.01	0.09	0.16		0.61	0.24		0.88	0.13	
Uniform Delay, d1	30.1	30.3	30.1	30.3	30.5		32.1	4.2		36.4	6.1	
Progression Factor	1.00	1.00	1.00	1.00	1.00		1.00	1.00		1.00	1.00	
Incremental Delay, d2	0.0	0.1	0.0	0.1	0.2		4.5	0.2		123.3	0.1	
Delay (s)	30.2	30.3	30.1	30.4	30.7		36.5	4.4		159.7	6.2	
Level of Service	C	C	C	C	C		D	A		F	A	
Approach Delay (s)		30.2			30.6			9.4			14.7	
Approach LOS		C			C			A			B	

Intersection Summary			
HCM 2000 Control Delay	12.8	HCM 2000 Level of Service	B
HCM 2000 Volume to Capacity ratio	0.29		
Actuated Cycle Length (s)	74.1	Sum of lost time (s)	14.2
Intersection Capacity Utilization	42.7%	ICU Level of Service	A
Analysis Period (min)	15		

c Critical Lane Group

Movement	EBL	EBR	EBR2	NBL	NBT	NBR	SBL	SBT	SBR	NWL2	NWL	NWR
Lane Configurations												
Volume (vph)	24	11	42	130	678	10	429	350	45	4	14	557
Ideal Flow (vphpl)	1900	1900	1900	1900	1900	1900	1900	1900	1900	1900	1900	1900
Total Lost time (s)	4.9	4.9		4.4	5.3		4.4	5.3			4.9	4.4
Lane Util. Factor	1.00	1.00		1.00	0.95		0.97	0.95			1.00	0.95
Frpb, ped/bikes	1.00	1.00		1.00	1.00		1.00	1.00			1.00	1.00
Flpb, ped/bikes	1.00	1.00		1.00	1.00		1.00	1.00			1.00	1.00
Frt	1.00	0.85		1.00	1.00		1.00	0.98			0.86	0.85
Flt Protected	0.95	1.00		0.95	1.00		0.95	1.00			1.00	1.00
Satd. Flow (prot)	1770	1583		1770	3529		3433	3466			1593	1504
Flt Permitted	0.30	1.00		0.95	1.00		0.95	1.00			1.00	1.00
Satd. Flow (perm)	552	1583		1770	3529		3433	3466			1593	1504
Peak-hour factor, PHF	0.92	0.92	0.92	0.92	0.92	0.92	0.92	0.92	0.92	0.92	0.92	0.92
Adj. Flow (vph)	26	12	46	141	737	11	466	380	49	4	15	605
RTOR Reduction (vph)	0	51	0	0	0	0	0	8	0	0	260	16
Lane Group Flow (vph)	26	7	0	141	748	0	466	421	0	0	55	293
Confl. Peds. (#/hr)			16	5		15			5	16		
Confl. Bikes (#/hr)					2	2	7	7			3	
Turn Type	Perm	Prot		Prot	NA		Prot	NA		Perm	Prot	pm+ov
Protected Phases		4		5	2		1	6			8	1
Permitted Phases	4									8		8
Actuated Green, G (s)	13.5	13.5		16.6	62.1		19.8	65.3			13.5	33.3
Effective Green, g (s)	13.5	13.5		16.6	62.1		19.8	65.3			13.5	33.3
Actuated g/C Ratio	0.12	0.12		0.15	0.56		0.18	0.59			0.12	0.30
Clearance Time (s)	4.9	4.9		4.4	5.3		4.4	5.3			4.9	4.4
Vehicle Extension (s)	2.0	2.0		2.0	2.0		2.0	2.0			2.0	2.0
Lane Grp Cap (vph)	67	194		267	1992		617	2057			195	455
v/s Ratio Prot		0.00		0.08	c0.21		c0.14	c0.12				c0.12
v/s Ratio Perm	0.05										0.03	0.08
v/c Ratio	0.39	0.04		0.53	0.38		0.76	0.20			0.28	0.64
Uniform Delay, d1	44.4	42.5		43.1	13.2		42.8	10.3			43.9	33.2
Progression Factor	1.00	1.00		1.24	1.12		1.08	0.74			3.78	1.31
Incremental Delay, d2	1.4	0.0		0.7	0.0		4.5	0.2			0.2	1.6
Delay (s)	45.8	42.5		54.0	14.9		50.9	7.8			166.1	45.0
Level of Service	D	D		D	B		D	A			F	D
Approach Delay (s)	43.6				21.1			30.3			106.1	
Approach LOS	D				C			C			F	

Intersection Summary			
HCM 2000 Control Delay	46.4	HCM 2000 Level of Service	D
HCM 2000 Volume to Capacity ratio	0.48		
Actuated Cycle Length (s)	110.0	Sum of lost time (s)	14.6
Intersection Capacity Utilization	71.1%	ICU Level of Service	C
Analysis Period (min)	15		
c Critical Lane Group			

Movement	WBL	WBR	NBT	NBR	SBL	SBT
Lane Configurations						
Volume (vph)	705	0	853	784	0	384
Ideal Flow (vphpl)	1900	1900	1900	1900	1900	1900
Total Lost time (s)	5.2		5.5	5.5		5.3
Lane Util. Factor	0.97		0.95	1.00		0.95
Frpb, ped/bikes	1.00		1.00	0.98		1.00
Flpb, ped/bikes	1.00		1.00	1.00		1.00
Frt	1.00		1.00	0.85		1.00
Flt Protected	0.95		1.00	1.00		1.00
Satd. Flow (prot)	3433		3539	1544		3539
Flt Permitted	0.95		1.00	1.00		1.00
Satd. Flow (perm)	3433		3539	1544		3539
Peak-hour factor, PHF	0.89	0.89	0.89	0.89	0.89	0.89
Adj. Flow (vph)	792	0	958	881	0	431
RTOR Reduction (vph)	0	0	0	465	0	0
Lane Group Flow (vph)	792	0	958	416	0	431
Confl. Bikes (#/hr)			2	6	8	
Turn Type	Prot		NA	Perm		NA
Protected Phases	8		2			6
Permitted Phases				2		
Actuated Green, G (s)	18.3		26.0	26.0		26.2
Effective Green, g (s)	18.3		26.0	26.0		26.2
Actuated g/C Ratio	0.33		0.47	0.47		0.48
Clearance Time (s)	5.2		5.5	5.5		5.3
Vehicle Extension (s)	3.6		3.9	3.9		4.7
Lane Grp Cap (vph)	1142		1672	729		1685
v/s Ratio Prot	c0.23		c0.27			0.12
v/s Ratio Perm				0.27		
v/c Ratio	0.69		0.57	0.57		0.26
Uniform Delay, d1	15.9		10.5	10.5		8.6
Progression Factor	1.00		1.00	1.00		0.92
Incremental Delay, d2	1.4		1.4	3.2		0.4
Delay (s)	17.4		11.9	13.7		8.3
Level of Service	B		B	B		A
Approach Delay (s)	17.4		12.8			8.3
Approach LOS	B		B			A

Intersection Summary			
HCM 2000 Control Delay	13.3	HCM 2000 Level of Service	B
HCM 2000 Volume to Capacity ratio	0.62		
Actuated Cycle Length (s)	55.0	Sum of lost time (s)	10.7
Intersection Capacity Utilization	53.1%	ICU Level of Service	A
Analysis Period (min)	15		

c Critical Lane Group

Movement	EBL	EBT	EBR	WBL	WBT	WBR	SEL	SET	SER	NWL	NWT	NWR
Lane Configurations												
Volume (vph)	27	639	139	61	451	281	322	140	26	232	272	150
Ideal Flow (vphpl)	1900	1900	1900	1900	1900	1900	1900	1900	1900	1900	1900	1900
Total Lost time (s)	4.4	4.9		4.4	4.9		4.9	4.9		4.9	4.9	4.9
Lane Util. Factor	1.00	0.95		1.00	0.95		0.95	0.95		0.95	0.95	1.00
Frpb, ped/bikes	1.00	0.99		1.00	0.98		1.00	0.99		1.00	1.00	0.93
Flpb, ped/bikes	1.00	1.00		1.00	1.00		1.00	1.00		1.00	1.00	1.00
Frt	1.00	0.97		1.00	0.94		1.00	0.98		1.00	1.00	0.85
Flt Protected	0.95	1.00		0.95	1.00		0.95	0.98		0.95	1.00	1.00
Satd. Flow (prot)	1770	3415		1770	3255		1681	1697		1681	1763	1476
Flt Permitted	0.95	1.00		0.95	1.00		0.95	0.98		0.95	1.00	1.00
Satd. Flow (perm)	1770	3415		1770	3255		1681	1697		1681	1763	1476
Peak-hour factor, PHF	0.84	0.84	0.84	0.84	0.84	0.84	0.84	0.84	0.84	0.84	0.84	0.84
Adj. Flow (vph)	32	761	165	73	537	335	383	167	31	276	324	179
RTOR Reduction (vph)	0	14	0	0	69	0	0	5	0	0	0	137
Lane Group Flow (vph)	32	912	0	73	803	0	287	289	0	248	352	42
Confl. Peds. (#/hr)			26			19			42			16
Bus Blockages (#/hr)	0	0	4	0	0	0	0	0	0	0	0	0
Turn Type	Prot	NA		Prot	NA		Split	NA		Split	NA	Perm
Protected Phases	5			1			4	4		3	3	
Permitted Phases		2			6							3
Actuated Green, G (s)	4.5	36.4		6.7	38.6		21.8	21.8		26.0	26.0	26.0
Effective Green, g (s)	4.5	36.4		6.7	38.6		21.8	21.8		26.0	26.0	26.0
Actuated g/C Ratio	0.04	0.33		0.06	0.35		0.20	0.20		0.24	0.24	0.24
Clearance Time (s)	4.4	4.9		4.4	4.9		4.9	4.9		4.9	4.9	4.9
Vehicle Extension (s)	2.0	2.0		2.0	2.0		2.0	2.0		2.0	2.0	2.0
Lane Grp Cap (vph)	72	1130		107	1142		333	336		397	416	348
v/s Ratio Prot	0.02			c0.04			c0.17	0.17		0.15	c0.20	
v/s Ratio Perm		c0.27			0.25							0.03
v/c Ratio	0.44	0.81		0.68	0.70		0.86	0.86		0.62	0.85	0.12
Uniform Delay, d1	51.5	33.6		50.6	30.8		42.6	42.6		37.6	40.1	33.0
Progression Factor	0.98	1.02		1.00	1.00		1.62	1.63		1.12	1.11	2.29
Incremental Delay, d2	1.2	3.0		13.3	1.6		23.6	23.3		2.0	13.2	0.1
Delay (s)	51.7	37.1		64.0	32.4		92.6	92.8		44.4	57.6	75.8
Level of Service	D	D		E	C		F	F		D	E	E
Approach Delay (s)		37.6			34.8			92.7			57.5	
Approach LOS		D			C			F			E	

Intersection Summary			
HCM 2000 Control Delay	51.4	HCM 2000 Level of Service	D
HCM 2000 Volume to Capacity ratio	0.82		
Actuated Cycle Length (s)	110.0	Sum of lost time (s)	19.1
Intersection Capacity Utilization	70.7%	ICU Level of Service	C
Analysis Period (min)	15		
c Critical Lane Group			

Movement	EBL	EBT	EBR	WBL	WBT	WBR	NBL	NBT	NBR	SBL	SBT	SBR
Lane Configurations												
Volume (vph)	439	646	30	4	668	45	95	16	3	10	0	44
Ideal Flow (vphpl)	1900	1900	1900	1900	1900	1900	1900	1900	1900	1900	1900	1900
Total Lost time (s)	4.4	4.9		4.4	5.6			4.9			4.9	4.4
Lane Util. Factor	1.00	0.95		1.00	0.95			1.00			1.00	1.00
Frpb, ped/bikes	1.00	1.00		1.00	1.00			1.00			1.00	0.99
Flpb, ped/bikes	1.00	1.00		1.00	1.00			0.99			1.00	1.00
Frt	1.00	0.99		1.00	0.99			1.00			1.00	0.85
Flt Protected	0.95	1.00		0.95	1.00			0.96			0.95	1.00
Satd. Flow (prot)	1770	3510		1770	3502			1765			1765	1574
Flt Permitted	0.95	1.00		0.95	1.00			0.75			0.75	1.00
Satd. Flow (perm)	1770	3510		1770	3502			1386			1388	1574
Peak-hour factor, PHF	0.84	0.84	0.84	0.84	0.84	0.84	0.84	0.84	0.84	0.84	0.84	0.84
Adj. Flow (vph)	523	769	36	5	795	54	113	19	4	12	0	52
RTOR Reduction (vph)	0	3	0	0	5	0	0	1	0	0	0	16
Lane Group Flow (vph)	523	802	0	5	844	0	0	135	0	0	12	36
Confl. Peds. (#/hr)	2		4	4		2	8		3	3		8
Confl. Bikes (#/hr)		9	1		6		1	21	1			
Turn Type	Prot	NA		Prot	NA		Perm	NA		Perm	NA	pm+ov
Protected Phases	7	4		3	8			2			6	7
Permitted Phases							2			6		6
Actuated Green, G (s)	44.8	35.1		44.9	34.5			15.8			15.8	60.6
Effective Green, g (s)	44.8	35.1		44.9	34.5			15.8			15.8	60.6
Actuated g/C Ratio	0.41	0.32		0.41	0.31			0.14			0.14	0.55
Clearance Time (s)	4.4	4.9		4.4	5.6			4.9			4.9	4.4
Vehicle Extension (s)	2.0	2.0		2.0	2.0			2.0			2.0	2.0
Lane Grp Cap (vph)	720	1120		722	1098			199			199	867
v/s Ratio Prot	c0.30	0.23		0.00	c0.24							0.02
v/s Ratio Perm								c0.10			0.01	0.01
v/c Ratio	0.73	0.72		0.01	0.77			0.68			0.06	0.04
Uniform Delay, d1	27.4	33.1		19.3	34.1			44.7			40.7	11.4
Progression Factor	1.00	1.00		1.00	1.00			1.00			1.00	1.00
Incremental Delay, d2	3.1	1.8		0.0	5.2			7.0			0.0	0.0
Delay (s)	30.5	34.9		19.3	39.3			51.7			40.7	11.4
Level of Service	C	C		B	D			D			D	B
Approach Delay (s)		33.2			39.2			51.7			16.9	
Approach LOS		C			D			D			B	

Intersection Summary			
HCM 2000 Control Delay	36.0	HCM 2000 Level of Service	D
HCM 2000 Volume to Capacity ratio	0.73		
Actuated Cycle Length (s)	110.0	Sum of lost time (s)	14.9
Intersection Capacity Utilization	70.4%	ICU Level of Service	C
Analysis Period (min)	15		
c Critical Lane Group			

Movement	EBL	EBT	EBR	WBL	WBT	WBR	SEL	SET	SER	NWL	NWT	NWR
Lane Configurations												
Volume (vph)	99	12	28	3	6	16	53	227	69	54	555	43
Ideal Flow (vphpl)	1900	1900	1900	1900	1900	1900	1900	1900	1900	1900	1900	1900
Total Lost time (s)		5.0			5.0		5.0	5.0		5.0	5.0	
Lane Util. Factor		1.00			1.00		1.00	0.95		1.00	0.95	
Frpb, ped/bikes		1.00			0.99		1.00	0.99		1.00	1.00	
Flpb, ped/bikes		1.00			1.00		1.00	1.00		1.00	1.00	
Frt		0.97			0.91		1.00	0.97		1.00	0.99	
Flt Protected		0.97			0.99		0.95	1.00		0.95	1.00	
Satd. Flow (prot)		1734			1671		1770	3387		1770	3492	
Flt Permitted		0.77			0.95		0.95	1.00		0.95	1.00	
Satd. Flow (perm)		1383			1601		1770	3387		1770	3492	
Peak-hour factor, PHF	0.85	0.85	0.85	0.85	0.85	0.85	0.85	0.85	0.85	0.85	0.85	0.85
Adj. Flow (vph)	116	14	33	4	7	19	62	267	81	64	653	51
RTOR Reduction (vph)	0	23	0	0	15	0	0	39	0	0	9	0
Lane Group Flow (vph)	0	140	0	0	15	0	62	309	0	64	695	0
Confl. Peds. (#/hr)	10		10	10		10	10		10	10		10
Turn Type	Perm	NA		Perm	NA		Prot	NA		Prot	NA	
Protected Phases		4			8		1			5	2	
Permitted Phases	4			8				6				
Actuated Green, G (s)		10.4			10.4		6.2	24.8		4.8	23.4	
Effective Green, g (s)		10.4			10.4		6.2	24.8		4.8	23.4	
Actuated g/C Ratio		0.19			0.19		0.11	0.45		0.09	0.43	
Clearance Time (s)		5.0			5.0		5.0	5.0		5.0	5.0	
Vehicle Extension (s)		2.0			2.0		2.0	2.0		2.0	2.0	
Lane Grp Cap (vph)		261			302		199	1527		154	1485	
v/s Ratio Prot							0.04			c0.04	c0.20	
v/s Ratio Perm		c0.10			0.01			0.09				
v/c Ratio		0.54			0.05		0.31	0.20		0.42	0.47	
Uniform Delay, d1		20.1			18.3		22.4	9.1		23.8	11.3	
Progression Factor		1.00			1.00		0.95	1.32		1.00	1.00	
Incremental Delay, d2		1.1			0.0		0.2	0.2		0.7	1.1	
Delay (s)		21.2			18.3		21.5	12.3		24.4	12.4	
Level of Service		C			B		C	B		C	B	
Approach Delay (s)		21.2			18.3			13.7			13.4	
Approach LOS		C			B			B			B	

Intersection Summary			
HCM 2000 Control Delay	14.5	HCM 2000 Level of Service	B
HCM 2000 Volume to Capacity ratio	0.46		
Actuated Cycle Length (s)	55.0	Sum of lost time (s)	15.0
Intersection Capacity Utilization	48.6%	ICU Level of Service	A
Analysis Period (min)	15		

c Critical Lane Group

Movement	EBL	EBT	WBT	WBR	SBL	SBR
Lane Configurations						
Volume (vph)	285	340	285	347	192	35
Ideal Flow (vphpl)	1900	1900	1900	1900	1900	1900
Total Lost time (s)	4.4	6.0	5.6	5.6	4.9	4.9
Lane Util. Factor	1.00	0.95	0.95	1.00	0.97	0.91
Frpb, ped/bikes	1.00	1.00	1.00	0.95	1.00	0.98
Flpb, ped/bikes	1.00	1.00	1.00	1.00	0.99	1.00
Frt	1.00	1.00	1.00	0.85	1.00	0.85
Flt Protected	0.95	1.00	1.00	1.00	0.95	1.00
Satd. Flow (prot)	1593	3185	3185	1356	3046	1277
Flt Permitted	0.95	1.00	1.00	1.00	0.95	1.00
Satd. Flow (perm)	1593	3185	3185	1356	3046	1277
Peak-hour factor, PHF	0.78	0.78	0.78	0.78	0.78	0.78
Adj. Flow (vph)	365	436	365	445	246	45
RTOR Reduction (vph)	0	0	0	321	2	32
Lane Group Flow (vph)	365	436	365	124	249	8
Confl. Peds. (#/hr)				23	10	
Confl. Bikes (#/hr)	5		3		2	3
Turn Type	Prot	NA	NA	Perm	Perm	Perm
Protected Phases	7	4	8			
Permitted Phases				8	6	6
Actuated Green, G (s)	20.1	43.2	19.1	19.1	14.4	14.4
Effective Green, g (s)	20.1	43.2	19.1	19.1	14.4	14.4
Actuated g/C Ratio	0.29	0.63	0.28	0.28	0.21	0.21
Clearance Time (s)	4.4	6.0	5.6	5.6	4.9	4.9
Vehicle Extension (s)	2.0	4.6	4.2	4.2	5.0	5.0
Lane Grp Cap (vph)	467	2008	888	378	640	268
v/s Ratio Prot	c0.23	0.14	c0.11			
v/s Ratio Perm				0.09	c0.08	0.01
v/c Ratio	0.78	0.22	0.41	0.33	0.39	0.03
Uniform Delay, d1	22.2	5.4	20.1	19.6	23.3	21.5
Progression Factor	1.00	1.00	1.00	1.00	1.00	1.00
Incremental Delay, d2	7.7	0.1	0.5	0.8	0.8	0.1
Delay (s)	29.9	5.5	20.6	20.4	24.1	21.6
Level of Service	C	A	C	C	C	C
Approach Delay (s)		16.6	20.5		23.8	
Approach LOS		B	C		C	

Intersection Summary			
HCM 2000 Control Delay	19.3	HCM 2000 Level of Service	B
HCM 2000 Volume to Capacity ratio	0.54		
Actuated Cycle Length (s)	68.5	Sum of lost time (s)	14.9
Intersection Capacity Utilization	52.6%	ICU Level of Service	A
Analysis Period (min)	15		
c Critical Lane Group			

Movement	EBL	EBT	EBR	WBL	WBT	WBR	NBL	NBT	NBR	SBL	SBT	SBR
Lane Configurations												
Volume (vph)	45	405	5	8	694	52	40	3	48	60	4	34
Ideal Flow (vphpl)	1900	1900	1900	1900	1900	1900	1900	1900	1900	1900	1900	1900
Total Lost time (s)	4.4	5.7		4.4	6.0			4.9	4.9		4.9	4.9
Lane Util. Factor	1.00	0.95		1.00	0.95			1.00	1.00		1.00	1.00
Frpb, ped/bikes	1.00	1.00		1.00	1.00			1.00	1.00		1.00	0.98
Flpb, ped/bikes	1.00	1.00		0.99	1.00			1.00	1.00		1.00	1.00
Frt	1.00	1.00		1.00	0.99			1.00	0.85		1.00	0.85
Flt Protected	0.95	1.00		0.95	1.00			0.96	1.00		0.96	1.00
Satd. Flow (prot)	1770	3531		1745	3494			1772	1583		1780	1553
Flt Permitted	0.95	1.00		0.95	1.00			0.69	1.00		0.70	1.00
Satd. Flow (perm)	1770	3531		1745	3494			1276	1583		1309	1553
Peak-hour factor, PHF	0.85	0.85	0.85	0.85	0.85	0.85	0.85	0.85	0.85	0.85	0.85	0.85
Adj. Flow (vph)	53	476	6	9	816	61	47	4	56	71	5	40
RTOR Reduction (vph)	0	0	0	0	4	0	0	0	47	0	0	33
Lane Group Flow (vph)	53	482	0	9	873	0	0	51	9	0	76	7
Confl. Peds. (#/hr)	18		10	18		10	8					8
Confl. Bikes (#/hr)		7			5							1
Turn Type	Prot	NA		Prot	NA		Perm	NA	Perm	Perm	NA	Perm
Protected Phases	7	4		3	8			2			6	
Permitted Phases							2		2	6		6
Actuated Green, G (s)	3.7	30.0		0.8	26.8			9.1	9.1		9.1	9.1
Effective Green, g (s)	3.7	30.0		0.8	26.8			9.1	9.1		9.1	9.1
Actuated g/C Ratio	0.07	0.55		0.01	0.49			0.17	0.17		0.17	0.17
Clearance Time (s)	4.4	5.7		4.4	6.0			4.9	4.9		4.9	4.9
Vehicle Extension (s)	2.0	6.1		2.0	6.4			2.0	2.0		2.0	2.0
Lane Grp Cap (vph)	119	1929		25	1705			211	262		216	257
v/s Ratio Prot	c0.03	c0.14		0.01	c0.25							
v/s Ratio Perm								0.04	0.01		c0.06	0.00
v/c Ratio	0.45	0.25		0.36	0.51			0.24	0.04		0.35	0.03
Uniform Delay, d1	24.6	6.5		26.8	9.6			19.9	19.2		20.3	19.2
Progression Factor	1.00	1.00		1.00	1.00			1.00	1.00		1.00	1.00
Incremental Delay, d2	1.0	0.2		3.2	0.8			0.2	0.0		0.4	0.0
Delay (s)	25.6	6.7		30.0	10.4			20.1	19.2		20.6	19.2
Level of Service	C	A		C	B			C	B		C	B
Approach Delay (s)		8.6			10.5			19.7			20.1	
Approach LOS		A			B			B			C	

Intersection Summary			
HCM 2000 Control Delay	11.2	HCM 2000 Level of Service	B
HCM 2000 Volume to Capacity ratio	0.46		
Actuated Cycle Length (s)	54.9	Sum of lost time (s)	15.3
Intersection Capacity Utilization	49.3%	ICU Level of Service	A
Analysis Period (min)	15		
c Critical Lane Group			

Movement	WBL	WBR	NBT	NBR	SBL	SBT
Lane Configurations						
Volume (veh/h)	12	15	707	34	19	403
Sign Control	Stop		Free			Free
Grade	0%		0%			0%
Peak Hour Factor	0.92	0.92	0.92	0.92	0.92	0.92
Hourly flow rate (vph)	13	16	768	37	21	438
Pedestrians			6			6
Lane Width (ft)			12.0			12.0
Walking Speed (ft/s)			4.0			4.0
Percent Blockage			1			1
Right turn flare (veh)						
Median type			None			None
Median storage veh)						
Upstream signal (ft)			1175			441
pX, platoon unblocked	0.95	0.95			0.95	
vC, conflicting volume	1053	409			805	
vC1, stage 1 conf vol						
vC2, stage 2 conf vol						
vCu, unblocked vol	960	284			700	
tC, single (s)	6.8	6.9			4.1	
tC, 2 stage (s)						
tF (s)	3.5	3.3			2.2	
p0 queue free %	94	98			98	
cM capacity (veh/h)	236	676			852	

Direction, Lane #	WB 1	NB 1	NB 2	SB 1	SB 2	SB 3
Volume Total	29	512	293	21	219	219
Volume Left	13	0	0	21	0	0
Volume Right	16	0	37	0	0	0
cSH	370	1700	1700	852	1700	1700
Volume to Capacity	0.08	0.30	0.17	0.02	0.13	0.13
Queue Length 95th (ft)	6	0	0	2	0	0
Control Delay (s)	15.6	0.0	0.0	9.3	0.0	0.0
Lane LOS	C			A		
Approach Delay (s)	15.6	0.0		0.4		
Approach LOS	C					

Intersection Summary			
Average Delay	0.5		
Intersection Capacity Utilization	30.6%	ICU Level of Service	A
Analysis Period (min)	15		

Movement	EBL	EBT	EBR	WBL	WBT	WBR	NBL	NBT	NBR	SBL	SBT	SBR
Lane Configurations												
Sign Control		Stop			Stop			Stop			Stop	
Volume (vph)	181	17	6	3	23	70	0	168	3	12	118	106
Peak Hour Factor	0.89	0.89	0.89	0.89	0.89	0.89	0.89	0.89	0.89	0.89	0.89	0.89
Hourly flow rate (vph)	203	19	7	3	26	79	0	189	3	13	133	119

Direction, Lane #	EB 1	WB 1	NB 1	SB 1	SB 2
Volume Total (vph)	229	108	192	146	119
Volume Left (vph)	203	3	0	13	0
Volume Right (vph)	7	79	3	0	119
Hadj (s)	0.19	-0.40	0.02	0.08	-0.67
Departure Headway (s)	5.4	5.1	5.3	5.8	5.0
Degree Utilization, x	0.35	0.15	0.29	0.23	0.17
Capacity (veh/h)	618	636	629	586	671
Control Delay (s)	11.3	9.0	10.5	9.3	7.8
Approach Delay (s)	11.3	9.0	10.5	8.6	
Approach LOS	B	A	B	A	

Intersection Summary			
Delay	9.9		
Level of Service	A		
Intersection Capacity Utilization	40.8%	ICU Level of Service	A
Analysis Period (min)	15		

Movement	NBL	NBT	SBT	SBR	SEL	SER
Lane Configurations						
Volume (veh/h)	14	616	417	31	7	6
Sign Control		Free	Free		Stop	
Grade		0%	0%		0%	
Peak Hour Factor	0.87	0.87	0.87	0.87	0.87	0.87
Hourly flow rate (vph)	16	708	479	36	8	7
Pedestrians					2	
Lane Width (ft)					12.0	
Walking Speed (ft/s)					4.0	
Percent Blockage					0	
Right turn flare (veh)						
Median type		None	None			
Median storage veh)						
Upstream signal (ft)		748	779			
pX, platoon unblocked						
vC, conflicting volume	517				1239	499
vC1, stage 1 conf vol						
vC2, stage 2 conf vol						
vCu, unblocked vol	517				1239	499
tC, single (s)	4.1				6.4	6.2
tC, 2 stage (s)						
tF (s)	2.2				3.5	3.3
p0 queue free %	98				96	99
cM capacity (veh/h)	1047				190	570

Direction, Lane #	NB 1	NB 2	SB 1	SE 1
Volume Total	16	708	515	15
Volume Left	16	0	0	8
Volume Right	0	0	36	7
cSH	1047	1700	1700	275
Volume to Capacity	0.02	0.42	0.30	0.05
Queue Length 95th (ft)	1	0	0	4
Control Delay (s)	8.5	0.0	0.0	18.9
Lane LOS	A			C
Approach Delay (s)	0.2		0.0	18.9
Approach LOS				C

Intersection Summary			
Average Delay	0.3		
Intersection Capacity Utilization	42.4%	ICU Level of Service	A
Analysis Period (min)	15		

Movement	WBL	WBR	NBT	NBR	SBL	SBT
Lane Configurations						
Volume (vph)	28	58	384	41	123	540
Ideal Flow (vphpl)	1900	1900	1900	1900	1900	1900
Total Lost time (s)	5.0		5.0		5.5	5.0
Lane Util. Factor	1.00		0.95		1.00	0.95
Frpb, ped/bikes	0.99		1.00		1.00	1.00
Flpb, ped/bikes	1.00		1.00		1.00	1.00
Frt	0.91		0.99		1.00	1.00
Flt Protected	0.98		1.00		0.95	1.00
Satd. Flow (prot)	1642		3473		1770	3539
Flt Permitted	0.98		1.00		0.95	1.00
Satd. Flow (perm)	1642		3473		1770	3539
Peak-hour factor, PHF	0.92	0.92	0.92	0.92	0.92	0.92
Adj. Flow (vph)	30	63	417	45	134	587
RTOR Reduction (vph)	57	0	5	0	0	0
Lane Group Flow (vph)	36	0	457	0	134	587
Confl. Peds. (#/hr)	10	10		10	10	
Turn Type	Prot		NA		Prot	NA
Protected Phases	8		2		1	6
Permitted Phases						
Actuated Green, G (s)	7.6		43.3		8.4	57.2
Effective Green, g (s)	7.6		43.3		8.4	57.2
Actuated g/C Ratio	0.10		0.58		0.11	0.76
Clearance Time (s)	5.0		5.0		5.5	5.0
Vehicle Extension (s)	2.0		2.0		2.0	2.0
Lane Grp Cap (vph)	166		2010		198	2706
v/s Ratio Prot	c0.02		0.13		c0.08	c0.17
v/s Ratio Perm						
v/c Ratio	0.22		0.23		0.68	0.22
Uniform Delay, d1	30.9		7.6		31.9	2.5
Progression Factor	1.00		1.00		1.00	1.00
Incremental Delay, d2	0.2		0.3		7.0	0.2
Delay (s)	31.1		7.9		38.9	2.7
Level of Service	C		A		D	A
Approach Delay (s)	31.1		7.9			9.4
Approach LOS	C		A			A

Intersection Summary			
HCM 2000 Control Delay	10.4	HCM 2000 Level of Service	B
HCM 2000 Volume to Capacity ratio	0.29		
Actuated Cycle Length (s)	74.8	Sum of lost time (s)	15.5
Intersection Capacity Utilization	44.0%	ICU Level of Service	A
Analysis Period (min)	15		

c Critical Lane Group

Movement	EBL	EBT	EBR	WBL	WBT	WBR	NBL	NBT	NBR	SBL	SBT	SBR
Lane Configurations												
Volume (vph)	97	721	0	0	663	352	117	0	787	0	0	0
Ideal Flow (vphpl)	1900	1900	1900	1900	1900	1900	1900	1900	1900	1900	1900	1900
Total Lost time (s)	5.5	5.5			5.5	5.5	5.5		5.5			
Lane Util. Factor	1.00	0.95			0.95	1.00	1.00		1.00			
Frpb, ped/bikes	1.00	1.00			1.00	1.00	1.00		0.98			
Flpb, ped/bikes	1.00	1.00			1.00	1.00	1.00		1.00			
Frt	1.00	1.00			1.00	0.85	1.00		0.85			
Flt Protected	0.95	1.00			1.00	1.00	0.95		1.00			
Satd. Flow (prot)	1593	3185			3185	1425	1593		1399			
Flt Permitted	0.95	1.00			1.00	1.00	0.95		1.00			
Satd. Flow (perm)	1593	3185			3185	1425	1593		1399			
Peak-hour factor, PHF	0.96	0.96	0.96	0.96	0.96	0.96	0.96	0.96	0.96	0.96	0.96	0.96
Adj. Flow (vph)	101	751	0	0	691	367	122	0	820	0	0	0
RTOR Reduction (vph)	0	0	0	0	0	241	0	0	0	0	0	0
Lane Group Flow (vph)	101	751	0	0	691	126	122	0	820	0	0	0
Confl. Peds. (#/hr)	10		10	10		10	10		10	10		10
Turn Type	Prot	NA			NA	Prot	Prot		custom			
Protected Phases	7	4			8	8	2		2			
Permitted Phases									4			
Actuated Green, G (s)	6.6	31.0			18.9	18.9	13.1		44.1			
Effective Green, g (s)	6.6	31.0			18.9	18.9	13.1		44.1			
Actuated g/C Ratio	0.12	0.56			0.34	0.34	0.24		0.80			
Clearance Time (s)	5.5	5.5			5.5	5.5	5.5		5.5			
Vehicle Extension (s)	2.0	2.0			2.0	2.0	2.0		2.0			
Lane Grp Cap (vph)	190	1791			1092	488	378		1399			
v/s Ratio Prot	0.06	0.24			0.22	0.09	0.08		c0.14			
v/s Ratio Perm									0.45			
v/c Ratio	0.53	0.42			0.63	0.26	0.32		0.59			
Uniform Delay, d1	22.8	6.9			15.2	13.0	17.3		2.1			
Progression Factor	1.00	1.00			1.00	1.00	1.00		1.00			
Incremental Delay, d2	1.4	0.1			0.9	0.1	0.2		0.4			
Delay (s)	24.2	7.0			16.1	13.1	17.5		2.5			
Level of Service	C	A			B	B	B		A			
Approach Delay (s)		9.0			15.1			4.4			0.0	
Approach LOS		A			B			A			A	

Intersection Summary			
HCM 2000 Control Delay	9.7	HCM 2000 Level of Service	A
HCM 2000 Volume to Capacity ratio	0.84		
Actuated Cycle Length (s)	55.1	Sum of lost time (s)	16.5
Intersection Capacity Utilization	86.5%	ICU Level of Service	E
Analysis Period (min)	15		

c Critical Lane Group

Movement	WBL	WBR	NBT	NBR	SBL	SBT
Lane Configurations						
Volume (vph)	175	23	398	175	29	529
Ideal Flow (vphpl)	1900	1900	1900	1900	1900	1900
Total Lost time (s)	5.5		5.5	5.5	5.5	5.5
Lane Util. Factor	0.97		0.95	1.00	1.00	0.95
Frpb, ped/bikes	0.99		1.00	0.96	1.00	1.00
Flpb, ped/bikes	1.00		1.00	1.00	1.00	1.00
Frt	0.98		1.00	0.85	1.00	1.00
Flt Protected	0.96		1.00	1.00	0.95	1.00
Satd. Flow (prot)	3383		3539	1514	1770	3539
Flt Permitted	0.96		1.00	1.00	0.95	1.00
Satd. Flow (perm)	3383		3539	1514	1770	3539
Peak-hour factor, PHF	0.97	0.97	0.97	0.97	0.97	0.97
Adj. Flow (vph)	180	24	410	180	30	545
RTOR Reduction (vph)	14	0	0	64	0	0
Lane Group Flow (vph)	190	0	410	116	30	545
Confl. Peds. (#/hr)	10	10		10	10	
Turn Type	Prot		NA	Perm	Prot	NA
Protected Phases	8		2		1	6
Permitted Phases				2		
Actuated Green, G (s)	9.8		52.5	52.5	2.8	60.8
Effective Green, g (s)	9.8		52.5	52.5	2.8	60.8
Actuated g/C Ratio	0.12		0.64	0.64	0.03	0.75
Clearance Time (s)	5.5		5.5	5.5	5.5	5.5
Vehicle Extension (s)	2.0		2.0	2.0	2.0	2.0
Lane Grp Cap (vph)	406		2276	974	60	2636
v/s Ratio Prot	c0.06		0.12		c0.02	c0.15
v/s Ratio Perm				0.08		
v/c Ratio	0.47		0.18	0.12	0.50	0.21
Uniform Delay, d1	33.5		5.9	5.6	38.7	3.1
Progression Factor	1.00		1.00	1.00	1.00	1.00
Incremental Delay, d2	0.3		0.2	0.2	2.4	0.2
Delay (s)	33.8		6.0	5.9	41.1	3.3
Level of Service	C		A	A	D	A
Approach Delay (s)	33.8		6.0			5.3
Approach LOS	C		A			A

Intersection Summary			
HCM 2000 Control Delay	9.8	HCM 2000 Level of Service	A
HCM 2000 Volume to Capacity ratio	0.27		
Actuated Cycle Length (s)	81.6	Sum of lost time (s)	16.5
Intersection Capacity Utilization	39.4%	ICU Level of Service	A
Analysis Period (min)	15		

c Critical Lane Group

Movement	EBL	EBT	EBR	WBL	WBT	WBR	NBL	NBT	NBR	SBL	SBT	SBR
Lane Configurations												
Volume (vph)	186	984	282	117	643	47	209	14	152	83	14	144
Ideal Flow (vphpl)	1900	1900	1900	1900	1900	1900	1900	1900	1900	1900	1900	1900
Total Lost time (s)	5.0	5.0	5.0	5.0	5.0		5.0	5.0		5.0	5.0	
Lane Util. Factor	1.00	0.95	1.00	1.00	0.95		1.00	1.00		1.00	1.00	
Frpb, ped/bikes	1.00	1.00	0.96	1.00	1.00		1.00	0.98		1.00	0.98	
Flpb, ped/bikes	1.00	1.00	1.00	1.00	1.00		0.99	1.00		0.99	1.00	
Frt	1.00	1.00	0.85	1.00	0.99		1.00	0.86		1.00	0.86	
Flt Protected	0.95	1.00	1.00	0.95	1.00		0.95	1.00		0.95	1.00	
Satd. Flow (prot)	1593	3185	1364	1593	3144		1583	1421		1583	1422	
Flt Permitted	0.95	1.00	1.00	0.95	1.00		0.63	1.00		0.61	1.00	
Satd. Flow (perm)	1593	3185	1364	1593	3144		1043	1421		1020	1422	
Peak-hour factor, PHF	0.95	0.95	0.95	0.95	0.95	0.95	0.95	0.95	0.95	0.95	0.95	0.95
Adj. Flow (vph)	196	1036	297	123	677	49	220	15	160	87	15	152
RTOR Reduction (vph)	0	0	156	0	5	0	0	117	0	0	111	0
Lane Group Flow (vph)	196	1036	141	123	721	0	220	58	0	87	56	0
Confl. Peds. (#/hr)	10		10	10		10	10		10	10		10
Turn Type	Prot	NA	Perm	Prot	NA		Perm	NA		Perm	NA	
Protected Phases	7	4		3	8			2			6	
Permitted Phases			4				2			6		
Actuated Green, G (s)	13.7	33.4	33.4	8.6	28.3		21.1	21.1		21.1	21.1	
Effective Green, g (s)	13.7	33.4	33.4	8.6	28.3		21.1	21.1		21.1	21.1	
Actuated g/C Ratio	0.18	0.43	0.43	0.11	0.36		0.27	0.27		0.27	0.27	
Clearance Time (s)	5.0	5.0	5.0	5.0	5.0		5.0	5.0		5.0	5.0	
Vehicle Extension (s)	2.0	2.0	2.0	2.0	2.0		2.0	2.0		2.0	2.0	
Lane Grp Cap (vph)	279	1362	583	175	1139		281	383		275	384	
v/s Ratio Prot	c0.12	c0.33		0.08	0.23			0.04			0.04	
v/s Ratio Perm			0.10				c0.21			0.09		
v/c Ratio	0.70	0.76	0.24	0.70	0.63		0.78	0.15		0.32	0.15	
Uniform Delay, d1	30.3	19.0	14.3	33.5	20.6		26.4	21.7		22.7	21.7	
Progression Factor	1.00	1.00	1.00	1.00	1.00		1.00	1.00		1.00	1.00	
Incremental Delay, d2	6.4	2.3	0.1	10.0	0.9		12.3	0.1		0.2	0.1	
Delay (s)	36.7	21.3	14.4	43.5	21.5		38.7	21.8		23.0	21.7	
Level of Service	D	C	B	D	C		D	C		C	C	
Approach Delay (s)		21.9			24.6			31.2			22.2	
Approach LOS		C			C			C			C	

Intersection Summary			
HCM 2000 Control Delay	23.9	HCM 2000 Level of Service	C
HCM 2000 Volume to Capacity ratio	0.79		
Actuated Cycle Length (s)	78.1	Sum of lost time (s)	15.0
Intersection Capacity Utilization	82.6%	ICU Level of Service	E
Analysis Period (min)	15		

c Critical Lane Group

Movement	WBL	WBR	NBT	NBR	SBL	SBT
Lane Configurations						
Volume (vph)	54	88	544	73	37	640
Ideal Flow (vphpl)	1900	1900	1900	1900	1900	1900
Total Lost time (s)	5.5		5.5		5.5	5.5
Lane Util. Factor	1.00		0.95		1.00	0.95
Frpb, ped/bikes	0.99		1.00		1.00	1.00
Flpb, ped/bikes	1.00		1.00		1.00	1.00
Frt	0.92		0.98		1.00	1.00
Flt Protected	0.98		1.00		0.95	1.00
Satd. Flow (prot)	1655		3463		1770	3539
Flt Permitted	0.98		1.00		0.95	1.00
Satd. Flow (perm)	1655		3463		1770	3539
Peak-hour factor, PHF	0.97	0.97	0.97	0.97	0.97	0.97
Adj. Flow (vph)	56	91	561	75	38	660
RTOR Reduction (vph)	76	0	8	0	0	0
Lane Group Flow (vph)	71	0	628	0	38	660
Confl. Peds. (#/hr)	10	10		10	10	
Turn Type	Prot		NA		Prot	NA
Protected Phases	8		2		1	6
Permitted Phases						
Actuated Green, G (s)	6.3		19.7		2.1	27.3
Effective Green, g (s)	6.3		19.7		2.1	27.3
Actuated g/C Ratio	0.14		0.44		0.05	0.61
Clearance Time (s)	5.5		5.5		5.5	5.5
Vehicle Extension (s)	2.0		2.0		2.0	2.0
Lane Grp Cap (vph)	233		1529		83	2166
v/s Ratio Prot	c0.04		c0.18		0.02	c0.19
v/s Ratio Perm						
v/c Ratio	0.30		0.41		0.46	0.30
Uniform Delay, d1	17.2		8.5		20.7	4.1
Progression Factor	1.00		1.00		1.00	1.00
Incremental Delay, d2	0.3		0.1		1.5	0.0
Delay (s)	17.4		8.6		22.2	4.2
Level of Service	B		A		C	A
Approach Delay (s)	17.4		8.6			5.1
Approach LOS	B		A			A

Intersection Summary			
HCM 2000 Control Delay	7.8	HCM 2000 Level of Service	A
HCM 2000 Volume to Capacity ratio	0.41		
Actuated Cycle Length (s)	44.6	Sum of lost time (s)	16.5
Intersection Capacity Utilization	45.1%	ICU Level of Service	A
Analysis Period (min)	15		

c Critical Lane Group

Movement	WBL	WBR	NBT	NBR	SBL	SBT
Lane Configurations						
Volume (vph)	51	29	576	81	36	670
Ideal Flow (vphpl)	1900	1900	1900	1900	1900	1900
Total Lost time (s)	5.5		5.5		5.5	5.5
Lane Util. Factor	1.00		0.95		1.00	0.95
Frpb, ped/bikes	0.99		1.00		1.00	1.00
Flpb, ped/bikes	1.00		1.00		1.00	1.00
Frt	0.95		0.98		1.00	1.00
Flt Protected	0.97		1.00		0.95	1.00
Satd. Flow (prot)	1705		3459		1770	3539
Flt Permitted	0.97		1.00		0.95	1.00
Satd. Flow (perm)	1705		3459		1770	3539
Peak-hour factor, PHF	0.97	0.97	0.97	0.97	0.97	0.97
Adj. Flow (vph)	53	30	594	84	37	691
RTOR Reduction (vph)	27	0	8	0	0	0
Lane Group Flow (vph)	56	0	670	0	37	691
Confl. Peds. (#/hr)	10	10		10	10	
Turn Type	Prot		NA		Prot	NA
Protected Phases	8		2		1	6
Permitted Phases						
Actuated Green, G (s)	4.7		23.4		2.1	31.0
Effective Green, g (s)	4.7		23.4		2.1	31.0
Actuated g/C Ratio	0.10		0.50		0.04	0.66
Clearance Time (s)	5.5		5.5		5.5	5.5
Vehicle Extension (s)	2.0		2.0		2.0	2.0
Lane Grp Cap (vph)	171		1733		79	2349
v/s Ratio Prot	c0.03		c0.19		0.02	c0.20
v/s Ratio Perm						
v/c Ratio	0.33		0.39		0.47	0.29
Uniform Delay, d1	19.5		7.2		21.8	3.3
Progression Factor	1.00		1.00		1.00	1.00
Incremental Delay, d2	0.4		0.1		1.6	0.0
Delay (s)	19.9		7.3		23.4	3.3
Level of Service	B		A		C	A
Approach Delay (s)	19.9		7.3			4.3
Approach LOS	B		A			A

Intersection Summary			
HCM 2000 Control Delay	6.5	HCM 2000 Level of Service	A
HCM 2000 Volume to Capacity ratio	0.40		
Actuated Cycle Length (s)	46.7	Sum of lost time (s)	16.5
Intersection Capacity Utilization	43.3%	ICU Level of Service	A
Analysis Period (min)	15		

c Critical Lane Group

Movement	NBT	NBR	SBL	SBT	NWL	NWR
Lane Configurations						
Volume (vph)	387	26	191	501	15	313
Ideal Flow (vphpl)	1900	1900	1900	1900	1900	1900
Total Lost time (s)	5.5		5.5	5.5	5.5	5.5
Lane Util. Factor	0.95		1.00	0.95	1.00	1.00
Frpb, ped/bikes	1.00		1.00	1.00	1.00	0.98
Flpb, ped/bikes	1.00		1.00	1.00	1.00	1.00
Frt	0.99		1.00	1.00	1.00	0.85
Flt Protected	1.00		0.95	1.00	0.95	1.00
Satd. Flow (prot)	3499		1770	3539	1770	1552
Flt Permitted	1.00		0.95	1.00	0.95	1.00
Satd. Flow (perm)	3499		1770	3539	1770	1552
Peak-hour factor, PHF	0.99	0.99	0.99	0.99	0.99	0.99
Adj. Flow (vph)	391	26	193	506	15	316
RTOR Reduction (vph)	5	0	0	0	0	266
Lane Group Flow (vph)	412	0	193	506	15	50
Confl. Peds. (#/hr)		10	10		10	10
Turn Type	NA		Prot	NA	Prot	Perm
Protected Phases	2		1	6	8	
Permitted Phases						8
Actuated Green, G (s)	10.7		9.9	26.1	7.0	7.0
Effective Green, g (s)	10.7		9.9	26.1	7.0	7.0
Actuated g/C Ratio	0.24		0.22	0.59	0.16	0.16
Clearance Time (s)	5.5		5.5	5.5	5.5	5.5
Vehicle Extension (s)	2.0		2.0	2.0	2.0	2.0
Lane Grp Cap (vph)	848		397	2094	280	246
v/s Ratio Prot	c0.12		c0.11	0.14	0.01	
v/s Ratio Perm						c0.03
v/c Ratio	0.49		0.49	0.24	0.05	0.20
Uniform Delay, d1	14.3		14.9	4.3	15.7	16.1
Progression Factor	1.00		1.00	1.00	1.00	1.00
Incremental Delay, d2	0.2		0.3	0.0	0.0	0.1
Delay (s)	14.5		15.2	4.3	15.8	16.3
Level of Service	B		B	A	B	B
Approach Delay (s)	14.5			7.3	16.3	
Approach LOS	B			A	B	

Intersection Summary			
HCM 2000 Control Delay	11.4	HCM 2000 Level of Service	B
HCM 2000 Volume to Capacity ratio	0.41		
Actuated Cycle Length (s)	44.1	Sum of lost time (s)	16.5
Intersection Capacity Utilization	43.1%	ICU Level of Service	A
Analysis Period (min)	15		

c Critical Lane Group

Movement	EBL	EBT	EBR	WBL	WBT	WBR	NBL	NBT	NBR	SBL	SBT	SBR
Lane Configurations												
Volume (vph)	7	6	33	206	1	24	23	391	284	11	293	7
Ideal Flow (vphpl)	1900	1900	1900	1900	1900	1900	1900	1900	1900	1900	1900	1900
Total Lost time (s)		5.0			5.0	5.0		5.0	5.0		5.0	
Lane Util. Factor		1.00			1.00	1.00		1.00	1.00		1.00	
Frpb, ped/bikes		0.98			1.00	0.96		1.00	0.96		1.00	
Flpb, ped/bikes		1.00			0.99	1.00		1.00	1.00		1.00	
Frt		0.90			1.00	0.85		1.00	0.85		1.00	
Flt Protected		0.99			0.95	1.00		1.00	1.00		1.00	
Satd. Flow (prot)		1637			1756	1522		1856	1521		1852	
Flt Permitted		0.95			0.69	1.00		0.97	1.00		0.99	
Satd. Flow (perm)		1564			1276	1522		1813	1521		1828	
Peak-hour factor, PHF	0.97	0.97	0.97	0.97	0.97	0.97	0.97	0.97	0.97	0.97	0.97	0.97
Adj. Flow (vph)	7	6	34	212	1	25	24	403	293	11	302	7
RTOR Reduction (vph)	0	26	0	0	0	19	0	0	111	0	1	0
Lane Group Flow (vph)	0	21	0	0	213	6	0	427	182	0	319	0
Confl. Peds. (#/hr)	10		10	10		10	10		10	10		10
Turn Type	Perm	NA		Perm	NA	Perm	Perm	NA	Perm	Perm	NA	
Protected Phases		2			6			8			4	
Permitted Phases	2			6		6	8		8	4		
Actuated Green, G (s)		15.7			15.7	15.7		42.3	42.3		42.3	
Effective Green, g (s)		15.7			15.7	15.7		42.3	42.3		42.3	
Actuated g/C Ratio		0.23			0.23	0.23		0.62	0.62		0.62	
Clearance Time (s)		5.0			5.0	5.0		5.0	5.0		5.0	
Vehicle Extension (s)		2.0			2.0	2.0		2.0	2.0		2.0	
Lane Grp Cap (vph)		361			294	351		1127	946		1137	
v/s Ratio Prot												
v/s Ratio Perm		0.01			c0.17	0.00		c0.24	0.12		0.17	
v/c Ratio		0.06			0.72	0.02		0.38	0.19		0.28	
Uniform Delay, d1		20.4			24.2	20.2		6.4	5.5		5.9	
Progression Factor		1.00			1.00	1.00		1.00	1.00		1.00	
Incremental Delay, d2		0.0			7.3	0.0		1.0	0.5		0.6	
Delay (s)		20.4			31.5	20.2		7.3	6.0		6.5	
Level of Service		C			C	C		A	A		A	
Approach Delay (s)		20.4			30.3			6.8			6.5	
Approach LOS		C			C			A			A	

Intersection Summary			
HCM 2000 Control Delay	11.4	HCM 2000 Level of Service	B
HCM 2000 Volume to Capacity ratio	0.47		
Actuated Cycle Length (s)	68.0	Sum of lost time (s)	10.0
Intersection Capacity Utilization	56.5%	ICU Level of Service	B
Analysis Period (min)	15		

c Critical Lane Group

Movement	EBL	EBT	EBR	WBL	WBT	WBR	NBL	NBT	NBR	SBL	SBT	SBR
Lane Configurations												
Volume (vph)	472	55	545	25	66	30	443	193	17	17	176	319
Ideal Flow (vphpl)	1900	1900	1900	1900	1900	1900	1900	1900	1900	1900	1900	1900
Total Lost time (s)	5.0	5.5	5.5	5.0	5.0		5.5	5.5			5.5	5.5
Lane Util. Factor	0.97	1.00	1.00	1.00	1.00		0.91	0.91			0.95	0.95
Frpb, ped/bikes	1.00	1.00	0.97	1.00	0.99		1.00	1.00			0.99	0.97
Flpb, ped/bikes	1.00	1.00	1.00	1.00	1.00		1.00	1.00			1.00	1.00
Frt	1.00	1.00	0.85	1.00	0.95		1.00	0.99			0.96	0.85
Flt Protected	0.95	1.00	1.00	0.95	1.00		0.95	0.97			1.00	1.00
Satd. Flow (prot)	3433	1863	1530	1770	1761		1610	3281			1677	1466
Flt Permitted	0.95	1.00	1.00	0.95	1.00		0.95	0.97			1.00	1.00
Satd. Flow (perm)	3433	1863	1530	1770	1761		1610	3281			1677	1466
Peak-hour factor, PHF	0.91	0.91	0.91	0.91	0.91	0.91	0.91	0.91	0.91	0.91	0.91	0.91
Adj. Flow (vph)	519	60	599	27	73	33	487	212	19	19	193	351
RTOR Reduction (vph)	0	0	424	0	18	0	0	3	0	0	14	209
Lane Group Flow (vph)	519	60	175	27	88	0	243	472	0	0	282	58
Confl. Peds. (#/hr)	10		10	10		10	10		10	10		10
Turn Type	Prot	NA	Perm	Prot	NA		Split	NA		Split	NA	Perm
Protected Phases	7	4		3	8		2	2		6	6	
Permitted Phases			4									6
Actuated Green, G (s)	15.8	23.6	23.6	1.3	9.6		16.9	16.9			17.4	17.4
Effective Green, g (s)	15.8	23.6	23.6	1.3	9.6		16.9	16.9			17.4	17.4
Actuated g/C Ratio	0.20	0.29	0.29	0.02	0.12		0.21	0.21			0.22	0.22
Clearance Time (s)	5.0	5.5	5.5	5.0	5.0		5.5	5.5			5.5	5.5
Vehicle Extension (s)	2.0	2.0	2.0	2.0	2.0		2.0	2.0			2.0	2.0
Lane Grp Cap (vph)	672	544	447	28	209		337	687			361	316
v/s Ratio Prot	c0.15	0.03		0.02	0.05		c0.15	0.14			c0.17	
v/s Ratio Perm			c0.11									0.04
v/c Ratio	0.77	0.11	0.39	0.96	0.42		0.72	0.69			0.78	0.18
Uniform Delay, d1	30.7	20.9	22.8	39.7	33.0		29.7	29.5			29.9	25.8
Progression Factor	1.00	1.00	1.00	1.00	1.00		1.00	1.00			1.00	1.00
Incremental Delay, d2	5.0	0.0	0.2	153.1	0.5		6.3	2.3			9.7	0.1
Delay (s)	35.8	20.9	23.0	192.7	33.5		36.0	31.7			39.6	25.9
Level of Service	D	C	C	F	C		D	C			D	C
Approach Delay (s)		28.5			65.8			33.2			33.1	
Approach LOS		C			E			C			C	

Intersection Summary			
HCM 2000 Control Delay	32.7	HCM 2000 Level of Service	C
HCM 2000 Volume to Capacity ratio	0.72		
Actuated Cycle Length (s)	80.7	Sum of lost time (s)	21.5
Intersection Capacity Utilization	68.5%	ICU Level of Service	C
Analysis Period (min)	15		

c Critical Lane Group

Movement	EBL	EBT	EBR	WBL	WBT	WBR	NBL	NBT	NBR	SBL	SBT	SBR
Lane Configurations												
Volume (vph)	57	4	30	57	6	21	26	521	32	11	596	43
Ideal Flow (vphpl)	1900	1900	1900	1900	1900	1900	1900	1900	1900	1900	1900	1900
Total Lost time (s)		4.9			4.9		4.4	4.9		4.4	4.9	
Lane Util. Factor		1.00			1.00		1.00	1.00		1.00	1.00	
Frpb, ped/bikes		0.99			0.99		1.00	1.00		1.00	1.00	
Flpb, ped/bikes		0.99			0.99		1.00	1.00		1.00	1.00	
Frt		0.95			0.97		1.00	0.99		1.00	0.99	
Flt Protected		0.97			0.97		0.95	1.00		0.95	1.00	
Satd. Flow (prot)		1687			1707		1770	1841		1770	1839	
Flt Permitted		0.82			0.80		0.95	1.00		0.95	1.00	
Satd. Flow (perm)		1420			1410		1770	1841		1770	1839	
Peak-hour factor, PHF	0.92	0.92	0.92	0.92	0.92	0.92	0.92	0.92	0.92	0.92	0.92	0.92
Adj. Flow (vph)	62	4	33	62	7	23	28	566	35	12	648	47
RTOR Reduction (vph)	0	29	0	0	20	0	0	2	0	0	3	0
Lane Group Flow (vph)	0	70	0	0	72	0	28	599	0	12	692	0
Confl. Peds. (#/hr)	10		10	10		10	10		10	10		10
Turn Type	Perm	NA		Perm	NA		Prot	NA		Prot	NA	
Protected Phases		4			8		5	2		1	6	
Permitted Phases	4			8								
Actuated Green, G (s)		8.5			8.5		2.6	44.1		1.2	42.7	
Effective Green, g (s)		8.5			8.5		2.6	44.1		1.2	42.7	
Actuated g/C Ratio		0.12			0.12		0.04	0.65		0.02	0.63	
Clearance Time (s)		4.9			4.9		4.4	4.9		4.4	4.9	
Vehicle Extension (s)		2.0			2.0		2.0	2.0		2.0	2.0	
Lane Grp Cap (vph)		177			176		67	1193		31	1154	
v/s Ratio Prot							c0.02	0.33		0.01	c0.38	
v/s Ratio Perm		0.05			c0.05							
v/c Ratio		0.40			0.41		0.42	0.50		0.39	0.60	
Uniform Delay, d1		27.4			27.4		32.0	6.2		33.0	7.6	
Progression Factor		1.10			1.00		0.95	1.53		1.00	1.00	
Incremental Delay, d2		0.5			0.6		1.4	1.4		2.9	2.3	
Delay (s)		30.7			28.0		31.7	10.9		35.9	9.9	
Level of Service		C			C		C	B		D	A	
Approach Delay (s)		30.7			28.0			11.8			10.3	
Approach LOS		C			C			B			B	

Intersection Summary			
HCM 2000 Control Delay	13.3	HCM 2000 Level of Service	B
HCM 2000 Volume to Capacity ratio	0.56		
Actuated Cycle Length (s)	68.0	Sum of lost time (s)	14.2
Intersection Capacity Utilization	51.2%	ICU Level of Service	A
Analysis Period (min)	15		

c Critical Lane Group

Movement	NBL	NBT	SBT	SBR	SEL	SER
Lane Configurations						
Volume (vph)	447	620	682	17	0	618
Ideal Flow (vphpl)	1900	1900	1900	1900	1900	1900
Total Lost time (s)	5.0	5.0	5.0			5.0
Lane Util. Factor	0.91	0.91	0.95			0.88
Frpb, ped/bikes	1.00	1.00	1.00			0.97
Flpb, ped/bikes	1.00	1.00	1.00			1.00
Frt	1.00	1.00	1.00			0.85
Flt Protected	0.95	0.99	1.00			1.00
Satd. Flow (prot)	1607	3344	3524			2707
Flt Permitted	1.00	0.95	1.00			1.00
Satd. Flow (perm)	1692	3236	3524			2707
Peak-hour factor, PHF	0.95	0.95	0.95	0.95	0.95	0.95
Adj. Flow (vph)	471	653	718	18	0	651
RTOR Reduction (vph)	0	0	4	0	0	84
Lane Group Flow (vph)	235	889	732	0	0	567
Confl. Peds. (#/hr)	10			10	10	10
Turn Type	Perm	NA	NA			Perm
Protected Phases		2	4			
Permitted Phases	2					6
Actuated Green, G (s)	38.6	38.6	19.4			38.6
Effective Green, g (s)	38.6	38.6	19.4			38.6
Actuated g/C Ratio	0.57	0.57	0.29			0.57
Clearance Time (s)	5.0	5.0	5.0			5.0
Vehicle Extension (s)	2.0	2.0	2.0			2.0
Lane Grp Cap (vph)	960	1836	1005			1536
v/s Ratio Prot			c0.21			
v/s Ratio Perm	0.14	c0.27				0.21
v/c Ratio	0.24	0.48	0.73			0.37
Uniform Delay, d1	7.4	8.8	21.9			8.0
Progression Factor	0.97	0.95	1.00			1.72
Incremental Delay, d2	0.6	0.9	2.3			0.1
Delay (s)	7.7	9.2	24.2			13.9
Level of Service	A	A	C			B
Approach Delay (s)		8.9	24.2		13.9	
Approach LOS		A	C		B	

Intersection Summary			
HCM 2000 Control Delay	14.7	HCM 2000 Level of Service	B
HCM 2000 Volume to Capacity ratio	0.57		
Actuated Cycle Length (s)	68.0	Sum of lost time (s)	10.0
Intersection Capacity Utilization	57.3%	ICU Level of Service	B
Analysis Period (min)	15		

c Critical Lane Group

Movement	EBL	EBT	EBR	WBL	WBT	WBR	NBL	NBT	NBR	SBL	SBT	SBR
Lane Configurations												
Volume (vph)	26	4	20	36	11	5	67	323	17	9	493	15
Ideal Flow (vphpl)	1900	1900	1900	1900	1900	1900	1900	1900	1900	1900	1900	1900
Total Lost time (s)		5.5			5.5		5.5	5.5		5.5	5.5	
Lane Util. Factor		1.00			1.00		1.00	0.95		1.00	0.95	
Frpb, ped/bikes		0.99			1.00		1.00	1.00		1.00	1.00	
Flpb, ped/bikes		1.00			0.99		1.00	1.00		0.99	1.00	
Frt		0.95			0.99		1.00	0.99		1.00	1.00	
Flt Protected		0.97			0.97		0.95	1.00		0.95	1.00	
Satd. Flow (prot)		1696			1766		1770	3507		1756	3520	
Flt Permitted		0.81			0.76		0.95	1.00		0.95	1.00	
Satd. Flow (perm)		1406			1391		1770	3507		1756	3520	
Peak-hour factor, PHF	0.95	0.95	0.95	0.95	0.95	0.95	0.95	0.95	0.95	0.95	0.95	0.95
Adj. Flow (vph)	27	4	21	38	12	5	71	340	18	9	519	16
RTOR Reduction (vph)	0	19	0	0	4	0	0	3	0	0	2	0
Lane Group Flow (vph)	0	33	0	0	51	0	71	355	0	9	533	0
Confl. Peds. (#/hr)	10		10	10		10	10		10	10		10
Turn Type	Perm	NA		Perm	NA		Prot	NA		Prot	NA	
Protected Phases		4			8		5	2		1	6	
Permitted Phases	4			8								
Actuated Green, G (s)		4.7			4.7		3.8	24.2		0.7	21.1	
Effective Green, g (s)		4.7			4.7		3.8	24.2		0.7	21.1	
Actuated g/C Ratio		0.10			0.10		0.08	0.52		0.02	0.46	
Clearance Time (s)		5.5			5.5		5.5	5.5		5.5	5.5	
Vehicle Extension (s)		2.0			2.0		2.0	2.0		2.0	2.0	
Lane Grp Cap (vph)		143			141		145	1840		26	1611	
v/s Ratio Prot							c0.04	c0.10		0.01	c0.15	
v/s Ratio Perm		0.02			c0.04							
v/c Ratio		0.23			0.36		0.49	0.19		0.35	0.33	
Uniform Delay, d1		19.0			19.3		20.2	5.8		22.5	8.0	
Progression Factor		1.00			1.00		1.00	1.00		1.00	1.00	
Incremental Delay, d2		0.3			0.6		0.9	0.0		2.9	0.0	
Delay (s)		19.3			19.9		21.2	5.8		25.4	8.0	
Level of Service		B			B		C	A		C	A	
Approach Delay (s)		19.3			19.9			8.3			8.3	
Approach LOS		B			B			A			A	

Intersection Summary			
HCM 2000 Control Delay	9.5	HCM 2000 Level of Service	A
HCM 2000 Volume to Capacity ratio	0.36		
Actuated Cycle Length (s)	46.1	Sum of lost time (s)	16.5
Intersection Capacity Utilization	38.6%	ICU Level of Service	A
Analysis Period (min)	15		

c Critical Lane Group

Movement	EBL	EBT	EBR	WBL	WBT	WBR	NBL	NBT	NBR	SBL	SBT	SBR
Lane Configurations												
Volume (vph)	11	28	82	32	19	34	45	372	34	39	507	4
Ideal Flow (vphpl)	1900	1900	1900	1900	1900	1900	1900	1900	1900	1900	1900	1900
Total Lost time (s)		4.9			4.9		4.4	5.8		4.4	5.5	
Lane Util. Factor		1.00			1.00		1.00	0.95		1.00	0.95	
Frpb, ped/bikes		0.99			0.99		1.00	1.00		1.00	1.00	
Flpb, ped/bikes		1.00			1.00		1.00	1.00		1.00	1.00	
Frt		0.91			0.95		1.00	0.99		1.00	1.00	
Flt Protected		1.00			0.98		0.95	1.00		0.95	1.00	
Satd. Flow (prot)		1663			1703		1770	3483		1770	3534	
Flt Permitted		0.97			0.84		0.95	1.00		0.95	1.00	
Satd. Flow (perm)		1613			1463		1770	3483		1770	3534	
Peak-hour factor, PHF	0.93	0.93	0.93	0.93	0.93	0.93	0.93	0.93	0.93	0.93	0.93	0.93
Adj. Flow (vph)	12	30	88	34	20	37	48	400	37	42	545	4
RTOR Reduction (vph)	0	75	0	0	31	0	0	6	0	0	0	0
Lane Group Flow (vph)	0	55	0	0	60	0	48	431	0	42	549	0
Confl. Peds. (#/hr)	10		10	10		10	10		10	10		10
Turn Type	Perm	NA		Perm	NA		Prot	NA		Prot	NA	
Protected Phases		4			8		5	2		1	6	
Permitted Phases	4			8								
Actuated Green, G (s)		10.3			10.3		4.4	39.1		3.5	38.5	
Effective Green, g (s)		10.3			10.3		4.4	39.1		3.5	38.5	
Actuated g/C Ratio		0.15			0.15		0.06	0.58		0.05	0.57	
Clearance Time (s)		4.9			4.9		4.4	5.8		4.4	5.5	
Vehicle Extension (s)		2.0			2.0		2.0	2.0		2.0	2.0	
Lane Grp Cap (vph)		244			221		114	2002		91	2000	
v/s Ratio Prot							c0.03	0.12		0.02	c0.16	
v/s Ratio Perm		0.03			c0.04							
v/c Ratio		0.23			0.27		0.42	0.22		0.46	0.27	
Uniform Delay, d1		25.4			25.5		30.6	7.0		31.3	7.6	
Progression Factor		1.00			1.35		1.35	0.88		1.00	1.00	
Incremental Delay, d2		0.2			0.2		0.9	0.2		1.3	0.3	
Delay (s)		25.5			34.6		42.0	6.4		32.7	7.9	
Level of Service		C			C		D	A		C	A	
Approach Delay (s)		25.5			34.6			9.9			9.7	
Approach LOS		C			C			A			A	

Intersection Summary			
HCM 2000 Control Delay	13.1	HCM 2000 Level of Service	B
HCM 2000 Volume to Capacity ratio	0.29		
Actuated Cycle Length (s)	68.0	Sum of lost time (s)	15.1
Intersection Capacity Utilization	43.4%	ICU Level of Service	A
Analysis Period (min)	15		

c Critical Lane Group

Movement	EBL	EBR	EBR2	NBL	NBT	NBR	SBL	SBT	SBR	NWL2	NWL	NWR
Lane Configurations												
Volume (vph)	37	33	160	70	375	16	685	656	33	15	12	568
Ideal Flow (vphpl)	1900	1900	1900	1900	1900	1900	1900	1900	1900	1900	1900	1900
Total Lost time (s)	4.9	4.9		4.4	5.3		4.4	5.3			4.9	4.4
Lane Util. Factor	1.00	1.00		1.00	0.95		0.97	0.95			1.00	0.95
Frpb, ped/bikes	1.00	1.00		1.00	1.00		1.00	1.00			0.96	1.00
Flpb, ped/bikes	0.99	1.00		1.00	1.00		1.00	1.00			1.00	1.00
Frt	1.00	0.85		1.00	0.99		1.00	0.99			0.86	0.85
Flt Protected	0.95	1.00		0.95	1.00		0.95	1.00			1.00	1.00
Satd. Flow (prot)	1755	1583		1770	3513		3433	3506			1538	1501
Flt Permitted	0.28	1.00		0.95	1.00		0.95	1.00			0.49	1.00
Satd. Flow (perm)	517	1583		1770	3513		3433	3506			760	1501
Peak-hour factor, PHF	0.98	0.98	0.98	0.98	0.98	0.98	0.98	0.98	0.98	0.98	0.98	0.98
Adj. Flow (vph)	38	34	163	71	383	16	699	669	34	15	12	580
RTOR Reduction (vph)	0	146	0	0	3	0	0	2	0	0	249	68
Lane Group Flow (vph)	38	51	0	71	396	0	699	701	0	0	56	234
Confl. Peds. (#/hr)	10	10	10	10		10	10		10	10	10	10
Turn Type	Perm	Prot		Prot	NA		Prot	NA		Perm	Prot	pm+ov
Protected Phases		4		5	2		1	6			8	1
Permitted Phases	4									8		8
Actuated Green, G (s)	14.3	14.3		28.7	20.1		87.0	78.4			14.3	101.3
Effective Green, g (s)	14.3	14.3		28.7	20.1		87.0	78.4			14.3	101.3
Actuated g/C Ratio	0.11	0.11		0.21	0.15		0.64	0.58			0.11	0.74
Clearance Time (s)	4.9	4.9		4.4	5.3		4.4	5.3			4.9	4.4
Vehicle Extension (s)	2.0	2.0		2.0	2.0		2.0	2.0			2.0	2.0
Lane Grp Cap (vph)	54	166		373	519		2196	2021			79	1118
v/s Ratio Prot		0.03		0.04	c0.11		c0.20	c0.20				0.13
v/s Ratio Perm	0.07										c0.07	0.02
v/c Ratio	0.70	0.31		0.19	0.76		0.32	0.35			0.71	0.21
Uniform Delay, d1	58.8	56.3		44.1	55.7		11.1	15.2			58.9	5.2
Progression Factor	1.00	1.00		0.78	0.80		0.86	0.84			4.37	0.01
Incremental Delay, d2	28.7	0.4		0.1	9.9		0.3	0.4			14.1	0.0
Delay (s)	87.5	56.7		34.3	54.5		9.9	13.2			271.2	0.1
Level of Service	F	E		C	D		A	B			F	A
Approach Delay (s)	61.6				51.5			11.6			136.3	
Approach LOS	E				D			B			F	

Intersection Summary			
HCM 2000 Control Delay	50.7	HCM 2000 Level of Service	D
HCM 2000 Volume to Capacity ratio	0.45		
Actuated Cycle Length (s)	136.0	Sum of lost time (s)	14.6
Intersection Capacity Utilization	70.6%	ICU Level of Service	C
Analysis Period (min)	15		

c Critical Lane Group

Movement	WBL	WBR	NBT	NBR	SBL	SBT
Lane Configurations						
Volume (vph)	873	0	504	848	0	821
Ideal Flow (vphpl)	1900	1900	1900	1900	1900	1900
Total Lost time (s)	5.5		5.5	5.5		5.5
Lane Util. Factor	0.97		0.95	1.00		0.95
Frpb, ped/bikes	1.00		1.00	0.96		1.00
Flpb, ped/bikes	1.00		1.00	1.00		1.00
Frt	1.00		1.00	0.85		1.00
Flt Protected	0.95		1.00	1.00		1.00
Satd. Flow (prot)	3433		3539	1521		3539
Flt Permitted	0.95		1.00	1.00		1.00
Satd. Flow (perm)	3433		3539	1521		3539
Peak-hour factor, PHF	0.96	0.96	0.96	0.96	0.96	0.96
Adj. Flow (vph)	909	0	525	883	0	855
RTOR Reduction (vph)	0	0	0	444	0	0
Lane Group Flow (vph)	909	0	525	439	0	855
Confl. Peds. (#/hr)	10	10		10	10	
Turn Type	Prot		NA	Perm		NA
Protected Phases	8		2			6
Permitted Phases				2		
Actuated Green, G (s)	23.2		33.8	33.8		33.8
Effective Green, g (s)	23.2		33.8	33.8		33.8
Actuated g/C Ratio	0.34		0.50	0.50		0.50
Clearance Time (s)	5.5		5.5	5.5		5.5
Vehicle Extension (s)	2.0		2.0	2.0		2.0
Lane Grp Cap (vph)	1171		1759	756		1759
v/s Ratio Prot	c0.26		0.15			0.24
v/s Ratio Perm				c0.29		
v/c Ratio	0.78		0.30	0.58		0.49
Uniform Delay, d1	20.1		10.1	12.1		11.3
Progression Factor	1.90		1.00	1.00		0.77
Incremental Delay, d2	1.5		0.4	3.2		0.9
Delay (s)	39.7		10.5	15.3		9.6
Level of Service	D		B	B		A
Approach Delay (s)	39.7		13.5			9.6
Approach LOS	D		B			A

Intersection Summary			
HCM 2000 Control Delay	20.0	HCM 2000 Level of Service	B
HCM 2000 Volume to Capacity ratio	0.66		
Actuated Cycle Length (s)	68.0	Sum of lost time (s)	11.0
Intersection Capacity Utilization	58.1%	ICU Level of Service	B
Analysis Period (min)	15		

c Critical Lane Group

Movement	EBL	EBT	EBR	WBL	WBT	WBR	SEL	SET	SER	NWL	NWT	NWR
Lane Configurations												
Volume (vph)	37	638	219	204	657	358	452	266	24	230	193	127
Ideal Flow (vphpl)	1900	1900	1900	1900	1900	1900	1900	1900	1900	1900	1900	1900
Total Lost time (s)	5.0	5.0		5.0	5.0		5.0	5.0		5.0	5.0	5.0
Lane Util. Factor	1.00	0.95		1.00	0.95		0.95	0.95		0.95	0.95	1.00
Frpb, ped/bikes	1.00	0.99		1.00	0.99		1.00	1.00		1.00	1.00	0.95
Flpb, ped/bikes	1.00	1.00		1.00	1.00		1.00	1.00		1.00	1.00	1.00
Frt	1.00	0.96		1.00	0.95		1.00	0.99		1.00	1.00	0.85
Flt Protected	0.95	1.00		0.95	1.00		0.95	0.99		0.95	0.99	1.00
Satd. Flow (prot)	1770	3374		1770	3311		1681	1729		1681	1760	1509
Flt Permitted	0.95	1.00		0.95	1.00		0.95	0.99		0.95	0.99	1.00
Satd. Flow (perm)	1770	3374		1770	3311		1681	1729		1681	1760	1509
Peak-hour factor, PHF	0.94	0.94	0.94	0.94	0.94	0.94	0.94	0.94	0.94	0.94	0.94	0.94
Adj. Flow (vph)	39	679	233	217	699	381	481	283	26	245	205	135
RTOR Reduction (vph)	0	25	0	0	50	0	0	1	0	0	0	113
Lane Group Flow (vph)	39	887	0	217	1030	0	390	399	0	220	230	22
Confl. Peds. (#/hr)	10		10	10		10	10		10	10		10
Turn Type	Prot	NA		Prot	NA		Split	NA		Split	NA	Perm
Protected Phases	7			3			6	6		5	5	
Permitted Phases		4			8							5
Actuated Green, G (s)	6.5	36.0		14.1	43.6		43.3	43.3		22.6	22.6	22.6
Effective Green, g (s)	6.5	36.0		14.1	43.6		43.3	43.3		22.6	22.6	22.6
Actuated g/C Ratio	0.05	0.26		0.10	0.32		0.32	0.32		0.17	0.17	0.17
Clearance Time (s)	5.0	5.0		5.0	5.0		5.0	5.0		5.0	5.0	5.0
Vehicle Extension (s)	2.0	2.0		2.0	2.0		2.0	2.0		2.0	2.0	2.0
Lane Grp Cap (vph)	84	893		183	1061		535	550		279	292	250
v/s Ratio Prot	0.02			c0.12			c0.23	0.23		c0.13	0.13	
v/s Ratio Perm		0.26			c0.31							0.01
v/c Ratio	0.46	0.99		1.19	0.97		0.73	0.72		0.79	0.79	0.09
Uniform Delay, d1	63.1	49.9		61.0	45.6		41.1	41.1		54.4	54.4	48.0
Progression Factor	1.01	0.99		1.00	1.00		1.30	1.30		1.21	1.21	2.55
Incremental Delay, d2	1.1	23.8		125.4	20.8		8.2	7.8		12.5	12.0	0.1
Delay (s)	64.7	73.0		186.4	66.4		61.7	61.3		78.2	77.6	122.5
Level of Service	E	E		F	E		E	E		E	E	F
Approach Delay (s)		72.7			86.4			61.5			88.2	
Approach LOS		E			F			E			F	

Intersection Summary			
HCM 2000 Control Delay	77.7	HCM 2000 Level of Service	E
HCM 2000 Volume to Capacity ratio	0.89		
Actuated Cycle Length (s)	136.0	Sum of lost time (s)	20.0
Intersection Capacity Utilization	87.8%	ICU Level of Service	E
Analysis Period (min)	15		

c Critical Lane Group

Movement	EBL	EBT	EBR	WBL	WBT	WBR	NBL	NBT	NBR	SBL	SBT	SBR
Lane Configurations												
Volume (vph)	256	824	94	5	773	42	68	7	10	122	21	446
Ideal Flow (vphpl)	1900	1900	1900	1900	1900	1900	1900	1900	1900	1900	1900	1900
Total Lost time (s)	5.0	5.0		5.0	5.0			4.9			5.0	5.0
Lane Util. Factor	1.00	0.95		1.00	0.95			1.00			1.00	1.00
Frpb, ped/bikes	1.00	1.00		1.00	1.00			1.00			1.00	0.98
Flpb, ped/bikes	1.00	1.00		1.00	1.00			0.99			0.99	1.00
Frt	1.00	0.98		1.00	0.99			0.98			1.00	0.85
Flt Protected	0.95	1.00		0.95	1.00			0.96			0.96	1.00
Satd. Flow (prot)	1770	3472		1762	3508			1750			1776	1552
Flt Permitted	0.95	1.00		0.95	1.00			0.67			0.75	1.00
Satd. Flow (perm)	1770	3472		1762	3508			1215			1381	1552
Peak-hour factor, PHF	0.91	0.91	0.91	0.91	0.91	0.91	0.91	0.91	0.91	0.91	0.91	0.91
Adj. Flow (vph)	281	905	103	5	849	46	75	8	11	134	23	490
RTOR Reduction (vph)	0	8	0	0	5	0	0	9	0	0	0	380
Lane Group Flow (vph)	281	1000	0	5	890	0	0	85	0	0	157	110
Confl. Peds. (#/hr)	10		10	10		10	10		10	10		10
Turn Type	Prot	NA		Prot	NA		Perm	NA		Perm	NA	Perm
Protected Phases	7	4		3	8			2			6	
Permitted Phases							2			6		6
Actuated Green, G (s)	12.0	32.6		0.9	21.5			12.6			12.5	12.5
Effective Green, g (s)	12.0	32.6		0.9	21.5			12.6			12.5	12.5
Actuated g/C Ratio	0.20	0.53		0.01	0.35			0.21			0.20	0.20
Clearance Time (s)	5.0	5.0		5.0	5.0			4.9			5.0	5.0
Vehicle Extension (s)	2.0	2.0		2.0	2.0			2.0			2.0	2.0
Lane Grp Cap (vph)	348	1855		25	1236			250			282	318
v/s Ratio Prot	c0.16	0.29		0.00	c0.25							
v/s Ratio Perm								0.07			c0.11	0.07
v/c Ratio	0.81	0.54		0.20	0.72			0.34			0.56	0.35
Uniform Delay, d1	23.4	9.3		29.7	17.1			20.7			21.8	20.8
Progression Factor	1.00	1.00		1.00	1.00			1.00			1.00	1.00
Incremental Delay, d2	12.2	0.2		1.4	1.7			0.3			1.4	0.2
Delay (s)	35.6	9.4		31.1	18.8			21.0			23.1	21.0
Level of Service	D	A		C	B			C			C	C
Approach Delay (s)		15.1			18.9			21.0			21.5	
Approach LOS		B			B			C			C	

Intersection Summary			
HCM 2000 Control Delay	17.9	HCM 2000 Level of Service	B
HCM 2000 Volume to Capacity ratio	0.70		
Actuated Cycle Length (s)	61.0	Sum of lost time (s)	15.0
Intersection Capacity Utilization	72.7%	ICU Level of Service	C
Analysis Period (min)	15		

c Critical Lane Group

Movement	EBL	EBT	EBR	WBL	WBT	WBR	SEL	SET	SER	NWL	NWT	NWR
Lane Configurations												
Volume (vph)	94	12	64	54	15	53	44	552	119	47	407	28
Ideal Flow (vphpl)	1900	1900	1900	1900	1900	1900	1900	1900	1900	1900	1900	1900
Total Lost time (s)		5.0			5.0		5.0	5.0		5.0	5.0	
Lane Util. Factor		1.00			1.00		1.00	0.95		1.00	0.95	
Frpb, ped/bikes		0.99			0.99		1.00	0.99		1.00	1.00	
Flpb, ped/bikes		1.00			1.00		1.00	1.00		1.00	1.00	
Frt		0.95			0.94		1.00	0.97		1.00	0.99	
Flt Protected		0.97			0.98		0.95	1.00		0.95	1.00	
Satd. Flow (prot)		1700			1695		1770	3420		1770	3495	
Flt Permitted		0.79			0.79		0.95	1.00		0.95	1.00	
Satd. Flow (perm)		1378			1360		1770	3420		1770	3495	
Peak-hour factor, PHF	0.97	0.97	0.97	0.98	0.97	0.98	0.98	0.98	0.97	0.97	0.98	0.98
Adj. Flow (vph)	97	12	66	55	15	54	45	563	123	48	415	29
RTOR Reduction (vph)	0	42	0	0	44	0	0	17	0	0	5	0
Lane Group Flow (vph)	0	133	0	0	80	0	45	669	0	48	439	0
Confl. Peds. (#/hr)	10		10	10		10	10		10	10		10
Turn Type	Perm	NA		Perm	NA		Prot	NA		Prot	NA	
Protected Phases		4			8		1			5	2	
Permitted Phases	4			8				6				
Actuated Green, G (s)		12.0			12.0		6.3	36.6		4.4	34.7	
Effective Green, g (s)		12.0			12.0		6.3	36.6		4.4	34.7	
Actuated g/C Ratio		0.18			0.18		0.09	0.54		0.06	0.51	
Clearance Time (s)		5.0			5.0		5.0	5.0		5.0	5.0	
Vehicle Extension (s)		2.0			2.0		2.0	2.0		2.0	2.0	
Lane Grp Cap (vph)		243			240		163	1840		114	1783	
v/s Ratio Prot							0.03			c0.03	0.13	
v/s Ratio Perm		c0.10			0.06			c0.20				
v/c Ratio		0.55			0.33		0.28	0.36		0.42	0.25	
Uniform Delay, d1		25.5			24.5		28.7	9.0		30.6	9.3	
Progression Factor		1.00			1.00		1.13	1.08		1.00	1.00	
Incremental Delay, d2		1.4			0.3		0.1	0.2		0.9	0.3	
Delay (s)		26.9			24.8		32.7	9.9		31.5	9.7	
Level of Service		C			C		C	A		C	A	
Approach Delay (s)		26.9			24.8			11.3			11.8	
Approach LOS		C			C			B			B	

Intersection Summary			
HCM 2000 Control Delay	14.4	HCM 2000 Level of Service	B
HCM 2000 Volume to Capacity ratio	0.41		
Actuated Cycle Length (s)	68.0	Sum of lost time (s)	15.0
Intersection Capacity Utilization	50.6%	ICU Level of Service	A
Analysis Period (min)	15		

c Critical Lane Group

Movement	EBL	EBT	WBT	WBR	SBL	SBR
Lane Configurations						
Volume (vph)	149	663	342	291	460	221
Ideal Flow (vphpl)	1900	1900	1900	1900	1900	1900
Total Lost time (s)	5.0	5.0	5.0	5.0	5.0	5.0
Lane Util. Factor	1.00	0.95	0.95	1.00	0.97	0.91
Frpb, ped/bikes	1.00	1.00	1.00	0.97	1.00	0.98
Flpb, ped/bikes	1.00	1.00	1.00	1.00	0.99	1.00
Frt	1.00	1.00	1.00	0.85	0.99	0.85
Flt Protected	0.95	1.00	1.00	1.00	0.95	1.00
Satd. Flow (prot)	1593	3185	3185	1381	3046	1273
Flt Permitted	0.95	1.00	1.00	1.00	0.95	1.00
Satd. Flow (perm)	1593	3185	3185	1381	3046	1273
Peak-hour factor, PHF	0.95	0.95	0.95	0.95	0.95	0.95
Adj. Flow (vph)	157	698	360	306	484	233
RTOR Reduction (vph)	0	0	0	227	4	150
Lane Group Flow (vph)	157	698	360	79	503	60
Confl. Peds. (#/hr)	10			10	10	10
Turn Type	Prot	NA	NA	Perm	Perm	Perm
Protected Phases	7	4	8			
Permitted Phases				8	6	6
Actuated Green, G (s)	8.3	26.4	13.1	13.1	14.6	14.6
Effective Green, g (s)	8.3	26.4	13.1	13.1	14.6	14.6
Actuated g/C Ratio	0.16	0.52	0.26	0.26	0.29	0.29
Clearance Time (s)	5.0	5.0	5.0	5.0	5.0	5.0
Vehicle Extension (s)	2.0	2.0	2.0	2.0	2.0	2.0
Lane Grp Cap (vph)	259	1648	818	354	871	364
v/s Ratio Prot	c0.10	c0.22	0.11			
v/s Ratio Perm				0.06	c0.17	0.05
v/c Ratio	0.61	0.42	0.44	0.22	0.58	0.17
Uniform Delay, d1	19.8	7.6	15.9	14.9	15.6	13.6
Progression Factor	1.00	1.00	1.00	1.00	1.00	1.00
Incremental Delay, d2	2.7	0.1	0.1	0.1	0.6	0.1
Delay (s)	22.6	7.7	16.0	15.1	16.1	13.7
Level of Service	C	A	B	B	B	B
Approach Delay (s)		10.4	15.6		15.4	
Approach LOS		B	B		B	

Intersection Summary			
HCM 2000 Control Delay	13.6	HCM 2000 Level of Service	B
HCM 2000 Volume to Capacity ratio	0.56		
Actuated Cycle Length (s)	51.0	Sum of lost time (s)	15.0
Intersection Capacity Utilization	52.5%	ICU Level of Service	A
Analysis Period (min)	15		

c Critical Lane Group

Movement	EBL	EBT	EBR	WBL	WBT	WBR	NBL	NBT	NBR	SBL	SBT	SBR
Lane Configurations												
Volume (vph)	56	931	35	38	523	49	24	4	24	102	7	50
Ideal Flow (vphpl)	1900	1900	1900	1900	1900	1900	1900	1900	1900	1900	1900	1900
Total Lost time (s)	5.0	5.0		5.0	5.0			5.0	5.0		5.0	5.0
Lane Util. Factor	1.00	0.95		1.00	0.95			1.00	1.00		1.00	1.00
Frpb, ped/bikes	1.00	1.00		1.00	1.00			1.00	0.98		1.00	0.98
Flpb, ped/bikes	1.00	1.00		1.00	1.00			0.99	1.00		0.99	1.00
Frt	1.00	0.99		1.00	0.99			1.00	0.85		1.00	0.85
Flt Protected	0.95	1.00		0.95	1.00			0.96	1.00		0.96	1.00
Satd. Flow (prot)	1770	3516		1770	3483			1776	1553		1768	1553
Flt Permitted	0.95	1.00		0.95	1.00			0.72	1.00		0.72	1.00
Satd. Flow (perm)	1770	3516		1770	3483			1336	1553		1327	1553
Peak-hour factor, PHF	0.94	0.94	0.94	0.94	0.94	0.94	0.94	0.94	0.94	0.94	0.94	0.94
Adj. Flow (vph)	60	990	37	40	556	52	26	4	26	109	7	53
RTOR Reduction (vph)	0	2	0	0	5	0	0	0	21	0	0	43
Lane Group Flow (vph)	60	1025	0	40	603	0	0	30	5	0	116	10
Confl. Peds. (#/hr)	10		10	10		10	10		10	10		10
Turn Type	Prot	NA		Prot	NA		Perm	NA	Perm	Perm	NA	Perm
Protected Phases	7	4		3	8			2			6	
Permitted Phases							2		2	6		6
Actuated Green, G (s)	4.1	26.2		2.3	24.4			10.4	10.4		10.4	10.4
Effective Green, g (s)	4.1	26.2		2.3	24.4			10.4	10.4		10.4	10.4
Actuated g/C Ratio	0.08	0.49		0.04	0.45			0.19	0.19		0.19	0.19
Clearance Time (s)	5.0	5.0		5.0	5.0			5.0	5.0		5.0	5.0
Vehicle Extension (s)	2.0	2.0		2.0	2.0			2.0	2.0		2.0	2.0
Lane Grp Cap (vph)	134	1709		75	1576			257	299		256	299
v/s Ratio Prot	c0.03	c0.29		0.02	0.17							
v/s Ratio Perm								0.02	0.00		c0.09	0.01
v/c Ratio	0.45	0.60		0.53	0.38			0.12	0.02		0.45	0.03
Uniform Delay, d1	23.8	10.0		25.3	9.8			18.0	17.6		19.2	17.7
Progression Factor	1.00	1.00		1.00	1.00			1.00	1.00		1.00	1.00
Incremental Delay, d2	0.9	0.4		3.6	0.1			0.1	0.0		0.5	0.0
Delay (s)	24.7	10.4		28.9	9.8			18.0	17.6		19.7	17.7
Level of Service	C	B		C	A			B	B		B	B
Approach Delay (s)		11.2			11.0			17.8			19.1	
Approach LOS		B			B			B			B	

Intersection Summary			
HCM 2000 Control Delay	12.0	HCM 2000 Level of Service	B
HCM 2000 Volume to Capacity ratio	0.57		
Actuated Cycle Length (s)	53.9	Sum of lost time (s)	15.0
Intersection Capacity Utilization	57.2%	ICU Level of Service	B
Analysis Period (min)	15		

c Critical Lane Group

Movement	WBL	WBR	NBT	NBR	SBL	SBT
Lane Configurations						
Volume (veh/h)	20	26	577	31	44	620
Sign Control	Stop		Free			Free
Grade	0%		0%			0%
Peak Hour Factor	0.88	0.88	0.88	0.88	0.88	0.88
Hourly flow rate (vph)	23	30	656	35	50	705
Pedestrians						
Lane Width (ft)						
Walking Speed (ft/s)						
Percent Blockage						
Right turn flare (veh)						
Median type			None			None
Median storage veh)						
Upstream signal (ft)			1175			441
pX, platoon unblocked	0.97					
vC, conflicting volume	1126	345			691	
vC1, stage 1 conf vol						
vC2, stage 2 conf vol						
vCu, unblocked vol	1069	345			691	
tC, single (s)	6.8	6.9			4.1	
tC, 2 stage (s)						
tF (s)	3.5	3.3			2.2	
p0 queue free %	89	95			94	
cM capacity (veh/h)	198	651			900	

Direction, Lane #	WB 1	NB 1	NB 2	SB 1	SB 2	SB 3
Volume Total	52	437	254	50	352	352
Volume Left	23	0	0	50	0	0
Volume Right	30	0	35	0	0	0
cSH	327	1700	1700	900	1700	1700
Volume to Capacity	0.16	0.26	0.15	0.06	0.21	0.21
Queue Length 95th (ft)	14	0	0	4	0	0
Control Delay (s)	18.1	0.0	0.0	9.2	0.0	0.0
Lane LOS	C			A		
Approach Delay (s)	18.1	0.0		0.6		
Approach LOS	C					

Intersection Summary			
Average Delay	0.9		
Intersection Capacity Utilization	33.6%	ICU Level of Service	A
Analysis Period (min)	15		

Movement	EBL	EBT	EBR	WBL	WBT	WBR	NBL	NBT	NBR	SBL	SBT	SBR
Lane Configurations												
Sign Control		Stop			Stop			Stop			Stop	
Volume (vph)	218	22	5	1	15	39	4	107	3	32	151	241
Peak Hour Factor	0.86	0.86	0.86	0.86	0.86	0.86	0.86	0.86	0.86	0.86	0.86	0.86
Hourly flow rate (vph)	253	26	6	1	17	45	5	124	3	37	176	280

Direction, Lane #	EB 1	WB 1	NB 1	SB 1
Volume Total (vph)	285	64	133	493
Volume Left (vph)	253	1	5	37
Volume Right (vph)	6	45	3	280
Hadj (s)	0.20	-0.39	0.03	-0.29
Departure Headway (s)	5.8	5.7	5.7	4.9
Degree Utilization, x	0.46	0.10	0.21	0.67
Capacity (veh/h)	574	519	560	708
Control Delay (s)	13.8	9.4	10.3	17.2
Approach Delay (s)	13.8	9.4	10.3	17.2
Approach LOS	B	A	B	C

Intersection Summary			
Delay	14.8		
Level of Service	B		
Intersection Capacity Utilization	58.0%	ICU Level of Service	B
Analysis Period (min)	15		

Movement	NBL	NBT	SBT	SBR	SEL	SER
Lane Configurations						
Volume (veh/h)	4	598	699	26	32	24
Sign Control		Free	Free		Stop	
Grade		0%	0%		0%	
Peak Hour Factor	0.92	0.92	0.92	0.92	0.92	0.92
Hourly flow rate (vph)	4	650	760	28	35	26
Pedestrians						
Lane Width (ft)						
Walking Speed (ft/s)						
Percent Blockage						
Right turn flare (veh)						
Median type		None	None			
Median storage veh)						
Upstream signal (ft)		748	431			
pX, platoon unblocked	0.78				0.78	0.78
vC, conflicting volume	788				1433	774
vC1, stage 1 conf vol						
vC2, stage 2 conf vol						
vCu, unblocked vol	583				1413	565
tC, single (s)	4.1				6.4	6.2
tC, 2 stage (s)						
tF (s)	2.2				3.5	3.3
p0 queue free %	99				70	94
cM capacity (veh/h)	770				117	407

Direction, Lane #	NB 1	NB 2	SB 1	SE 1
Volume Total	4	650	788	61
Volume Left	4	0	0	35
Volume Right	0	0	28	26
cSH	770	1700	1700	169
Volume to Capacity	0.01	0.38	0.46	0.36
Queue Length 95th (ft)	0	0	0	38
Control Delay (s)	9.7	0.0	0.0	37.9
Lane LOS	A			E
Approach Delay (s)	0.1		0.0	37.9
Approach LOS				E

Intersection Summary			
Average Delay	1.6		
Intersection Capacity Utilization	48.4%	ICU Level of Service	A
Analysis Period (min)	15		

Morena Blvd Station Area Planning Study

Traffic Analysis Appendix:
Intersection Geometry Diagrams

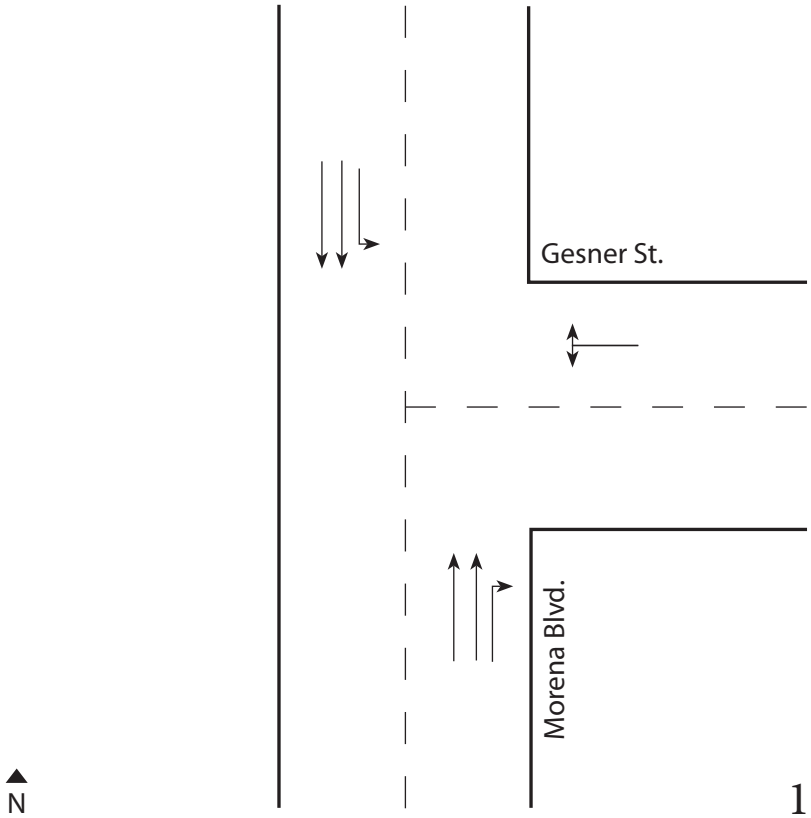

1

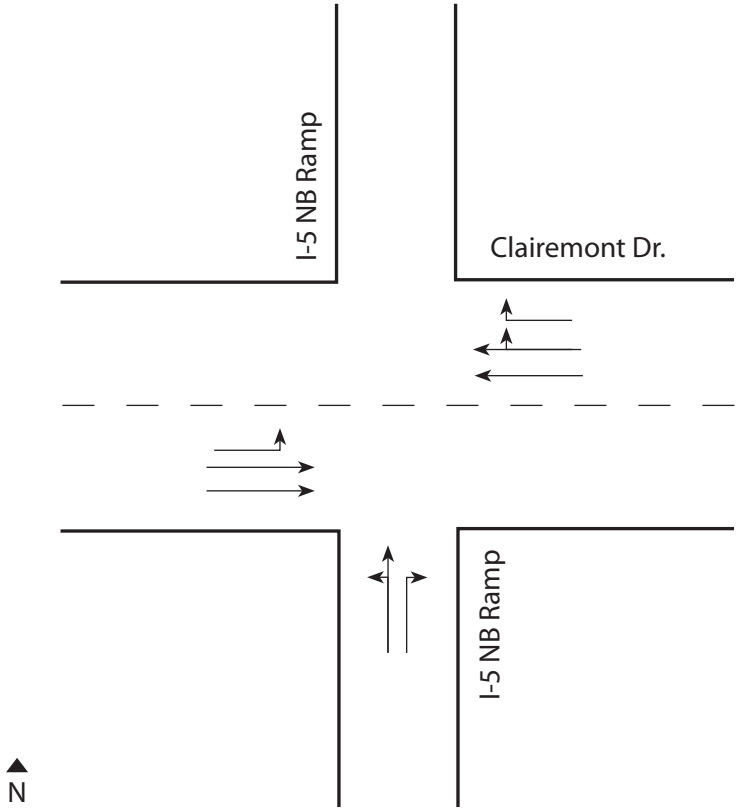

2

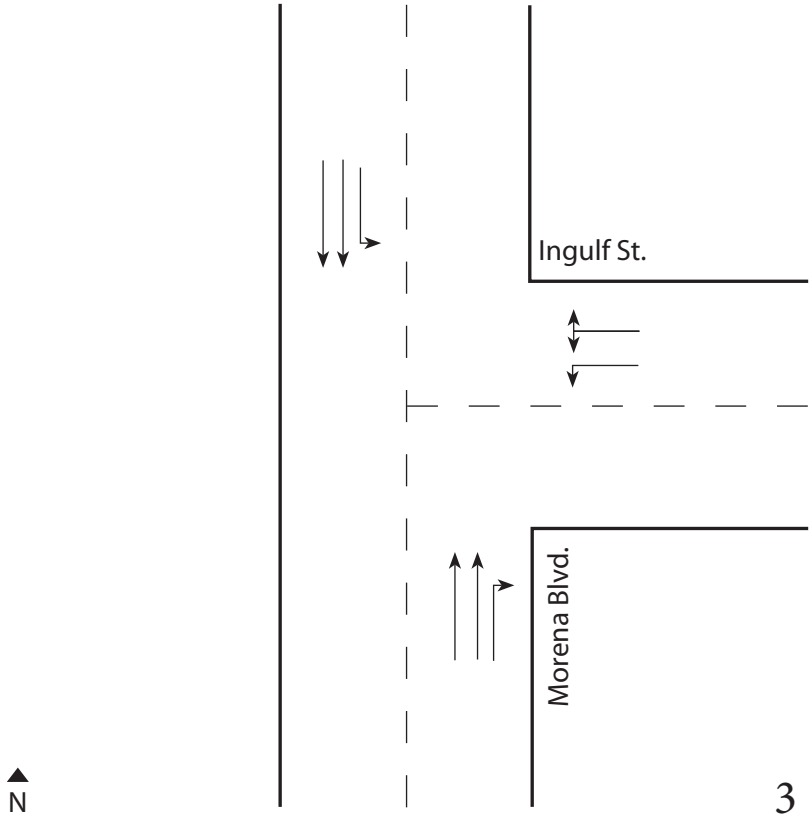

3

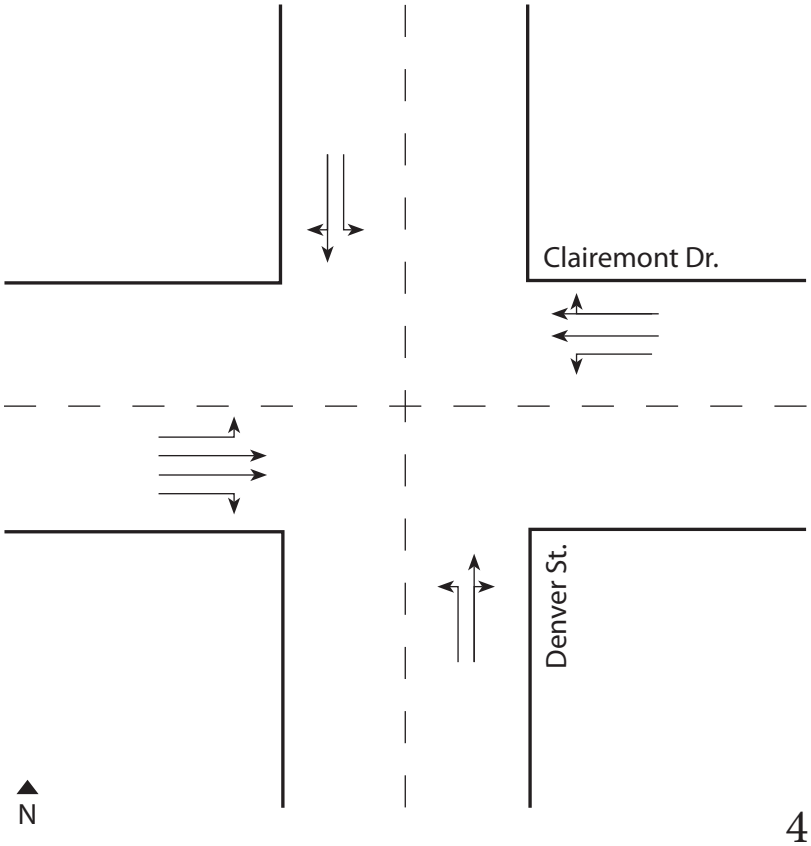

4

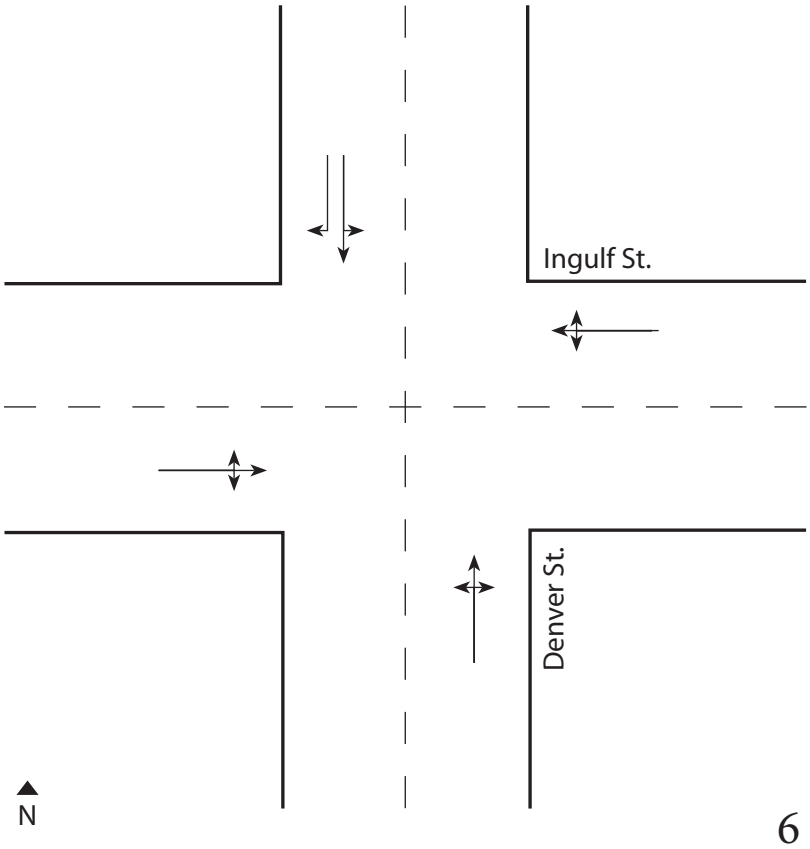

6

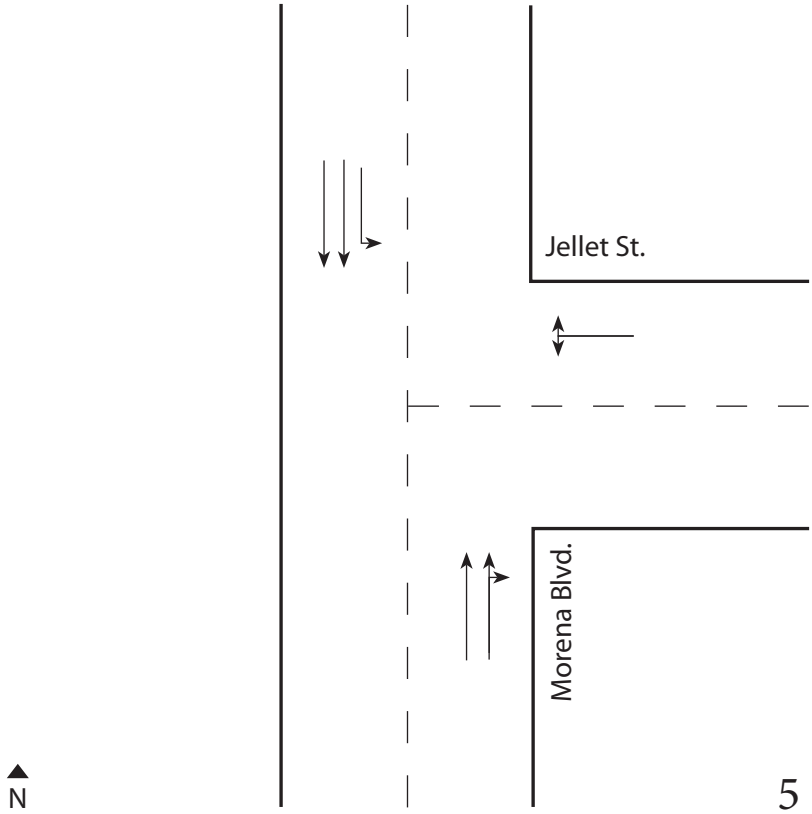

5

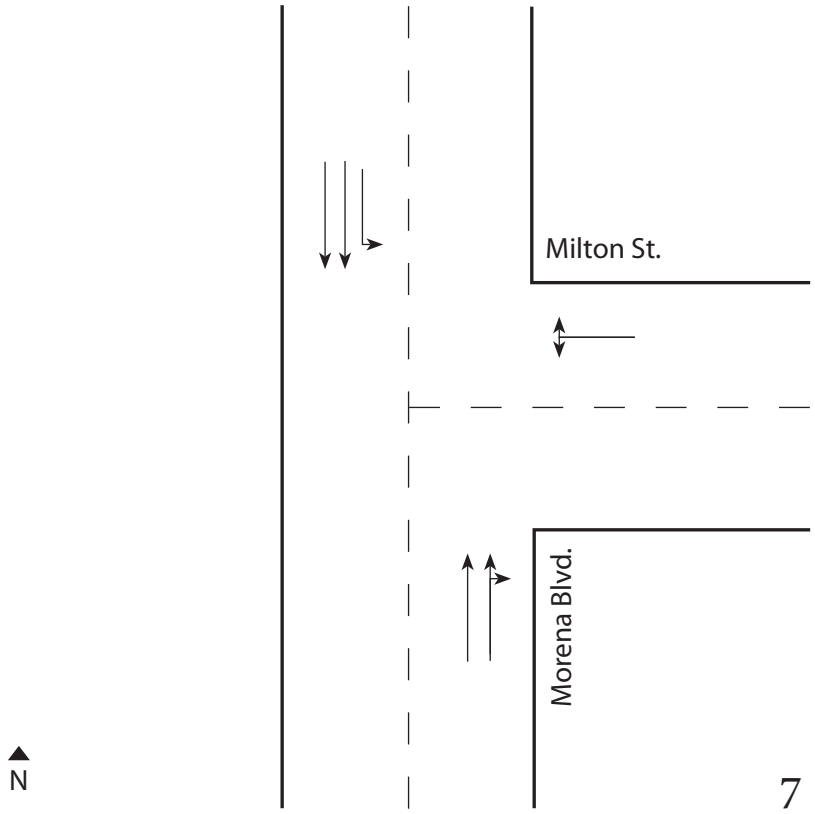

7

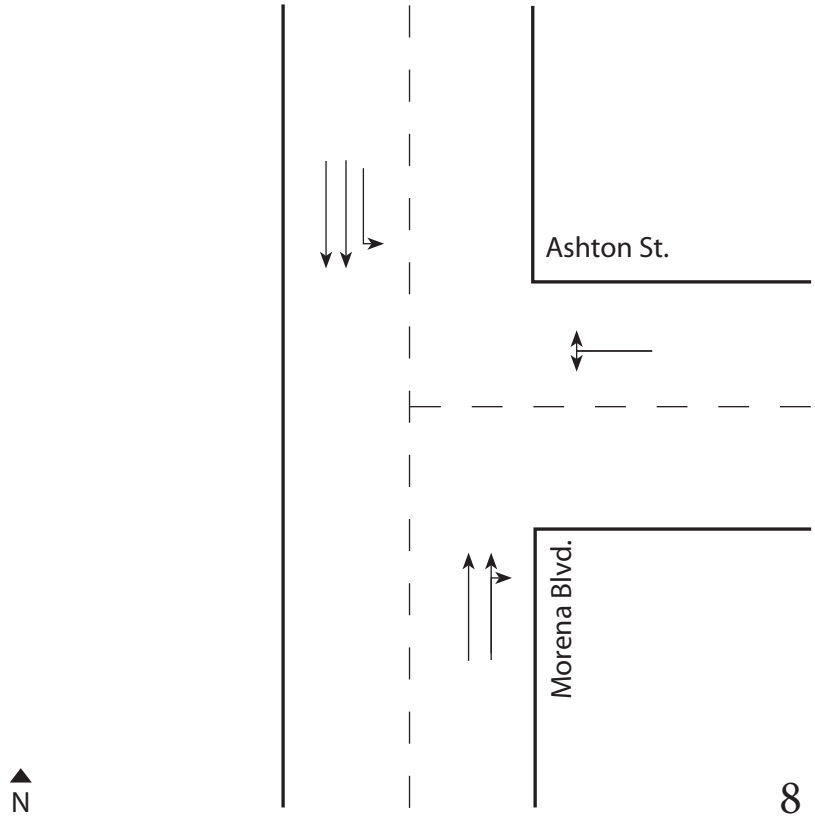

8

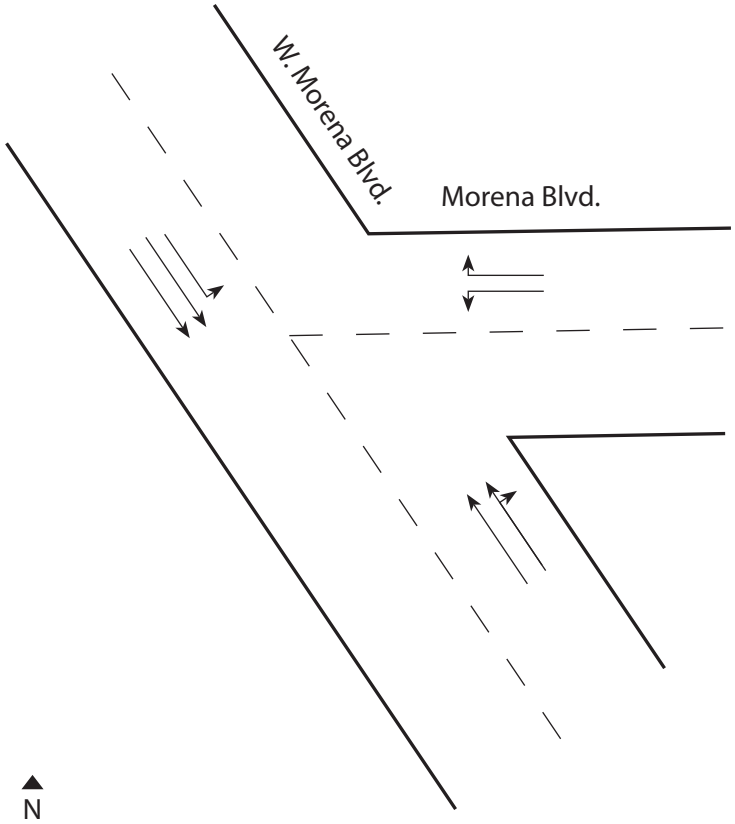

9

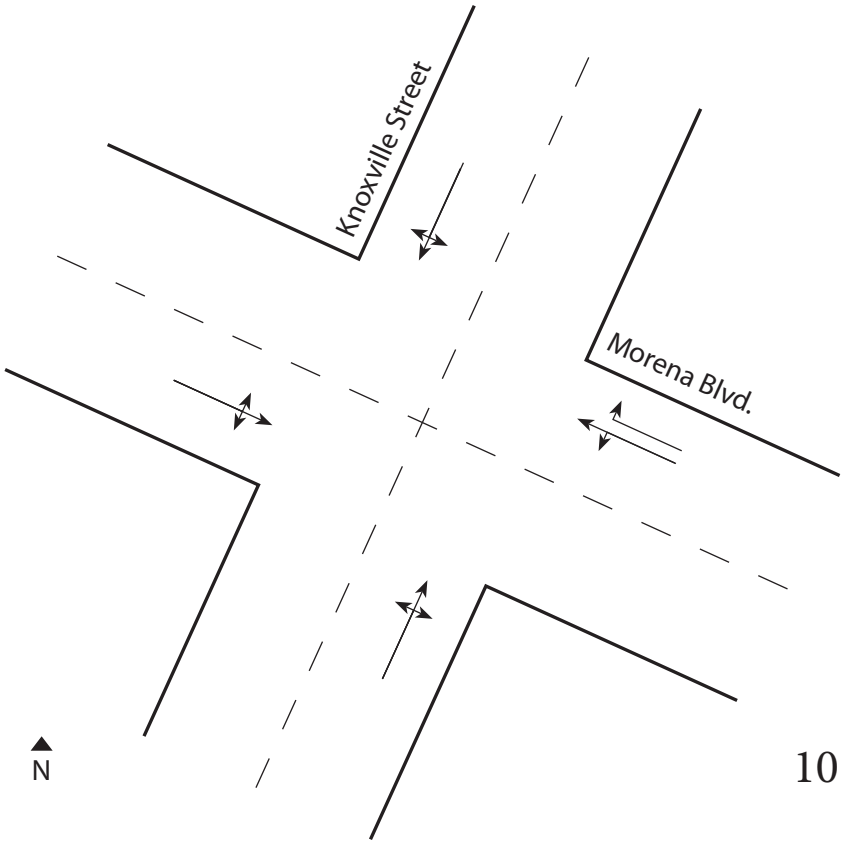

10

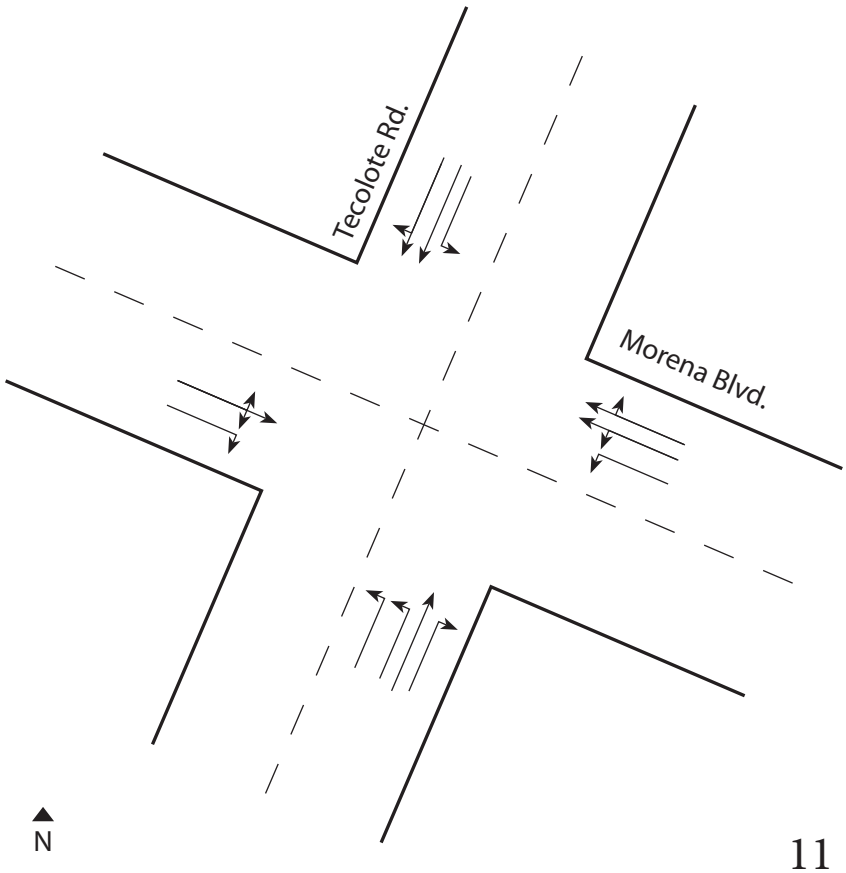

11

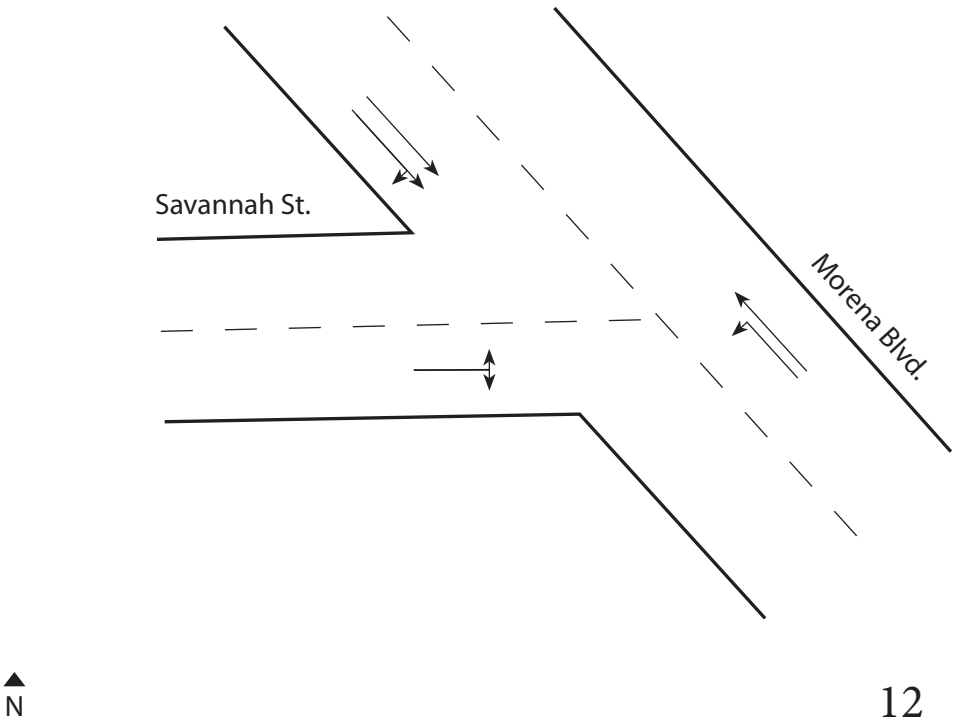

12

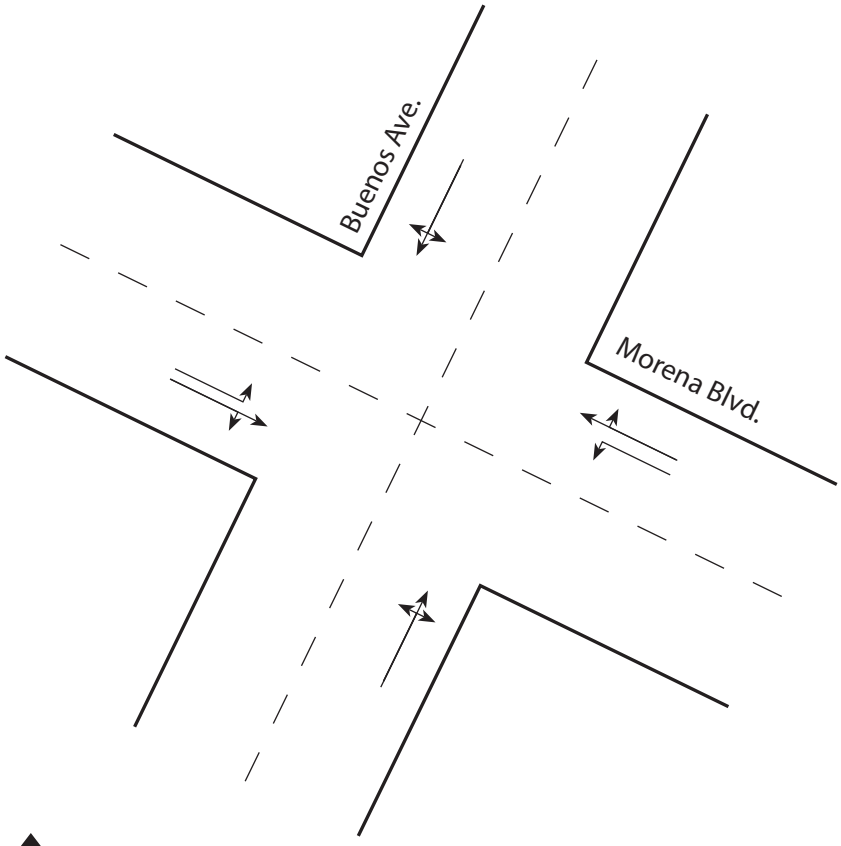

N

13

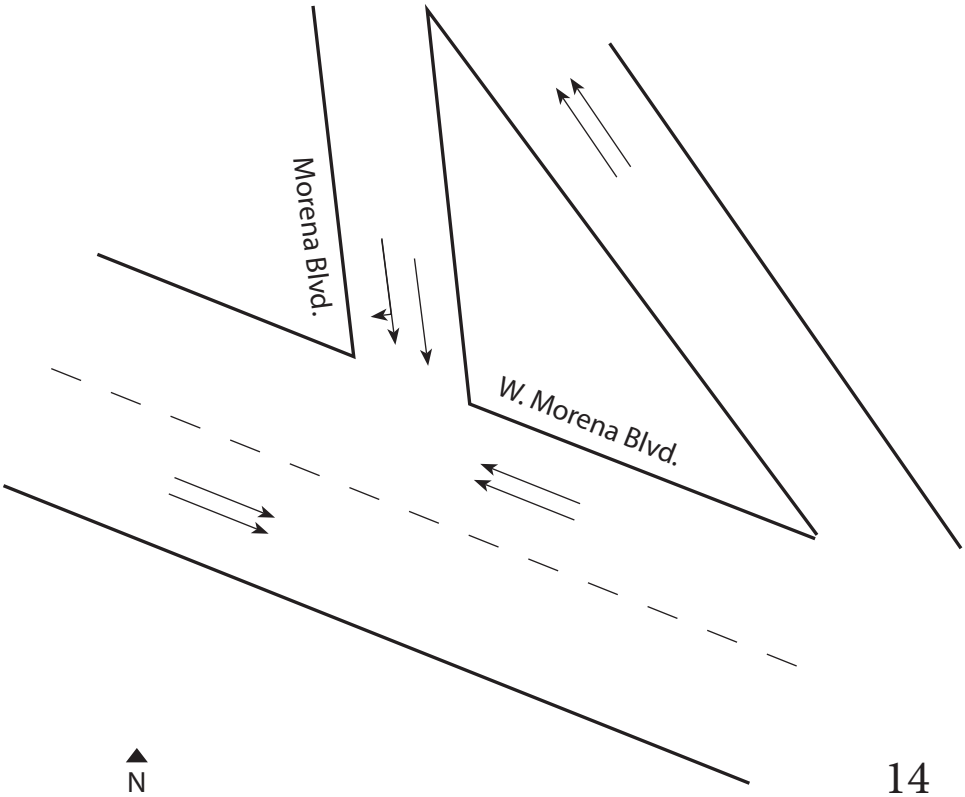

N

14

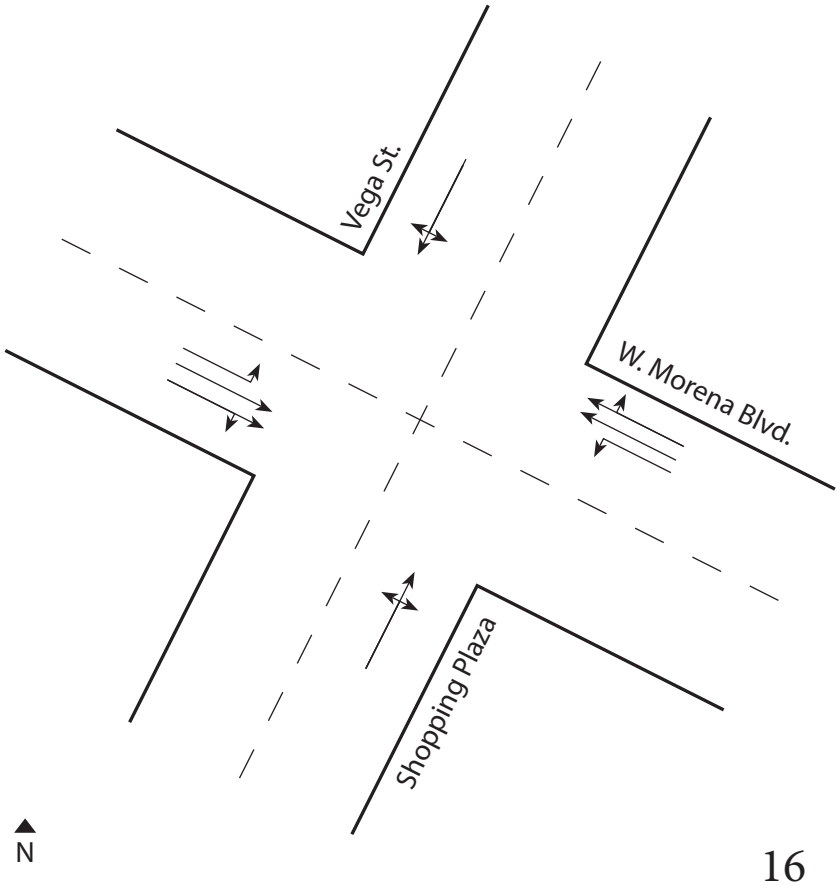
Vega St.
W. Morena Blvd.
Shopping Plaza
N

16

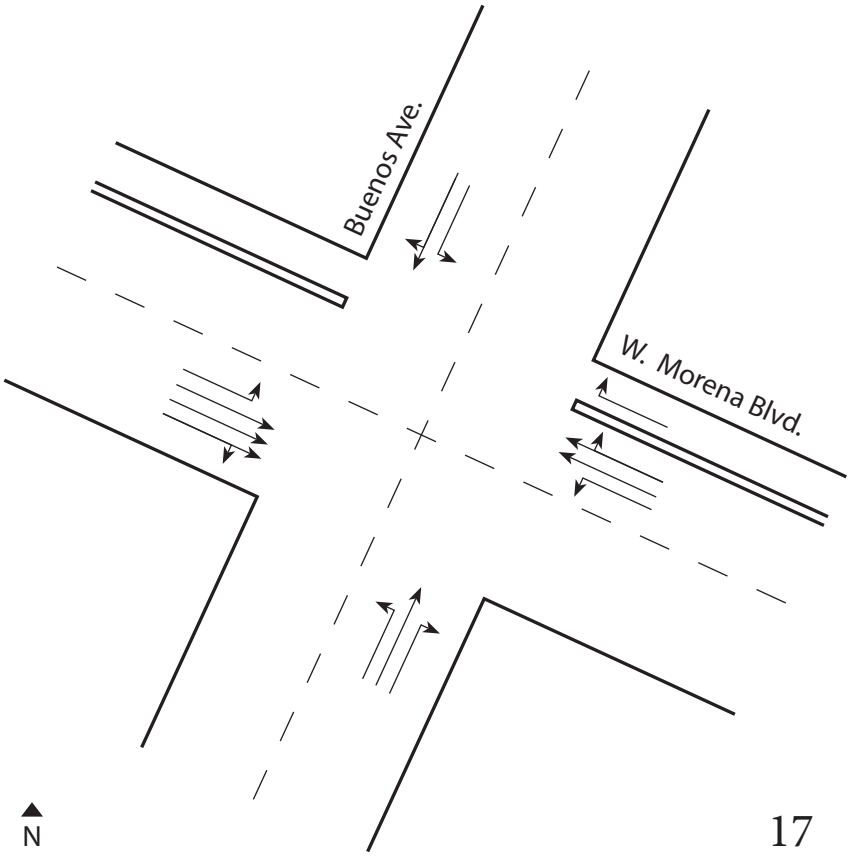
Buenos Ave.
W. Morena Blvd.
N

17

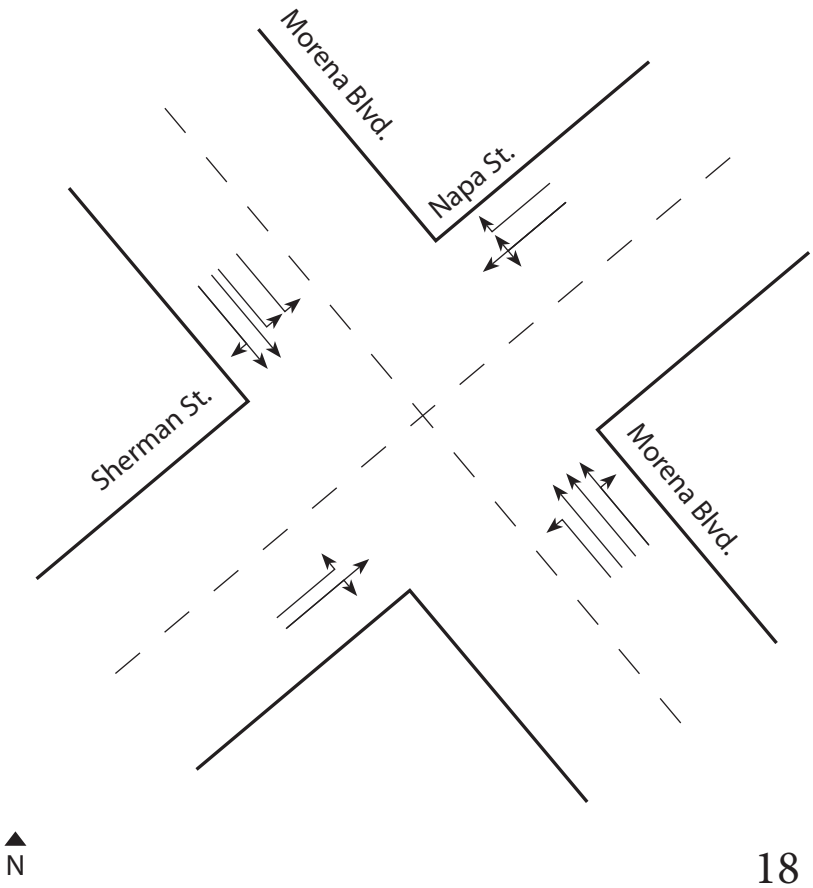
Morena Blvd.
Napa St.
Sherman St.
Morena Blvd.
N

18

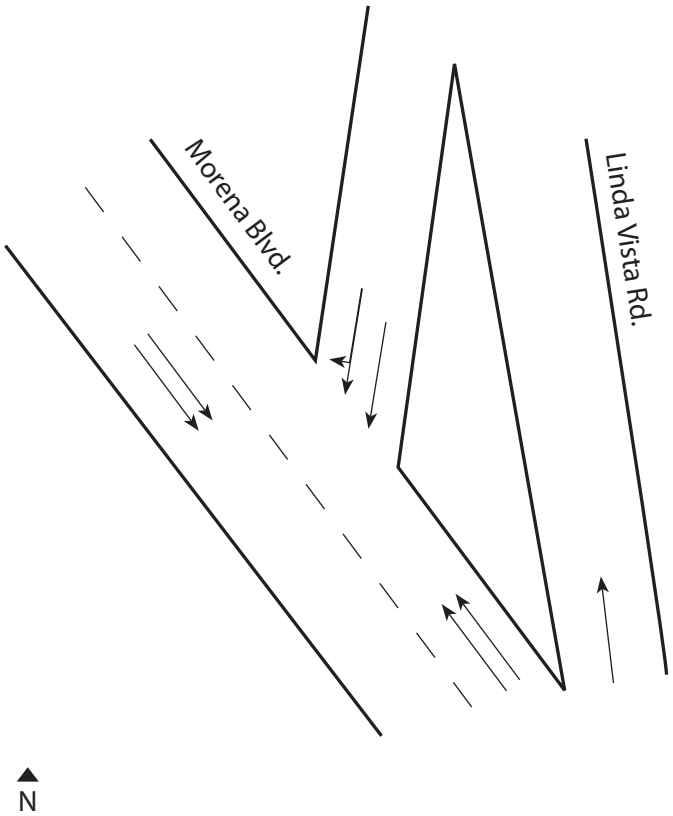
Morena Blvd.
Linda Vista Rd.
N

19

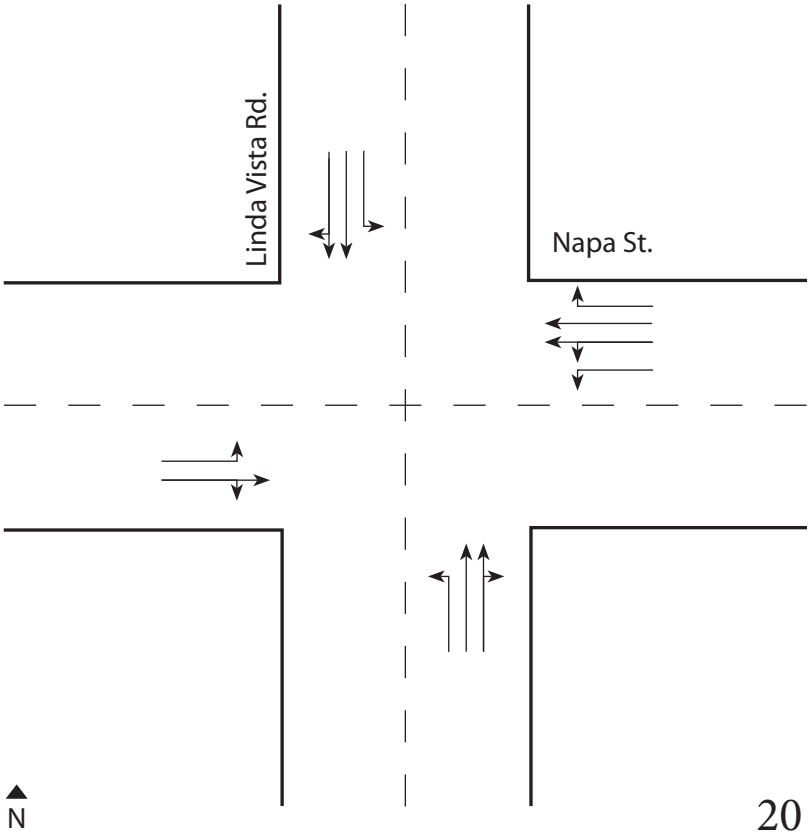
Linda Vista Rd.
Napa St.
N

20

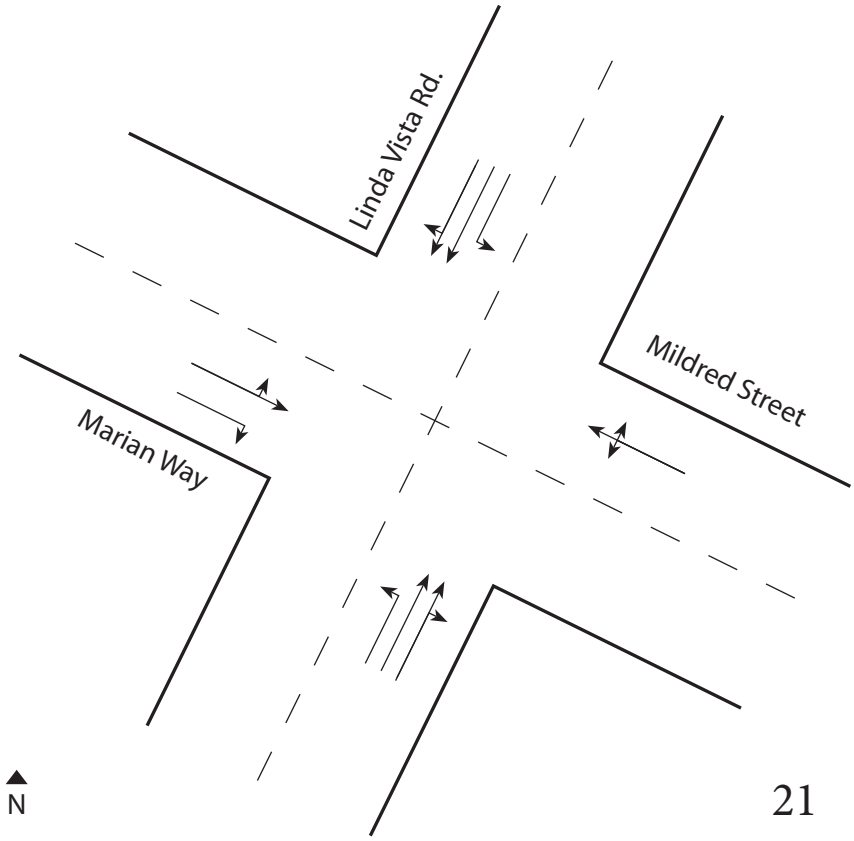
Linda Vista Rd.
Mildred Street
Marian Way
N

21

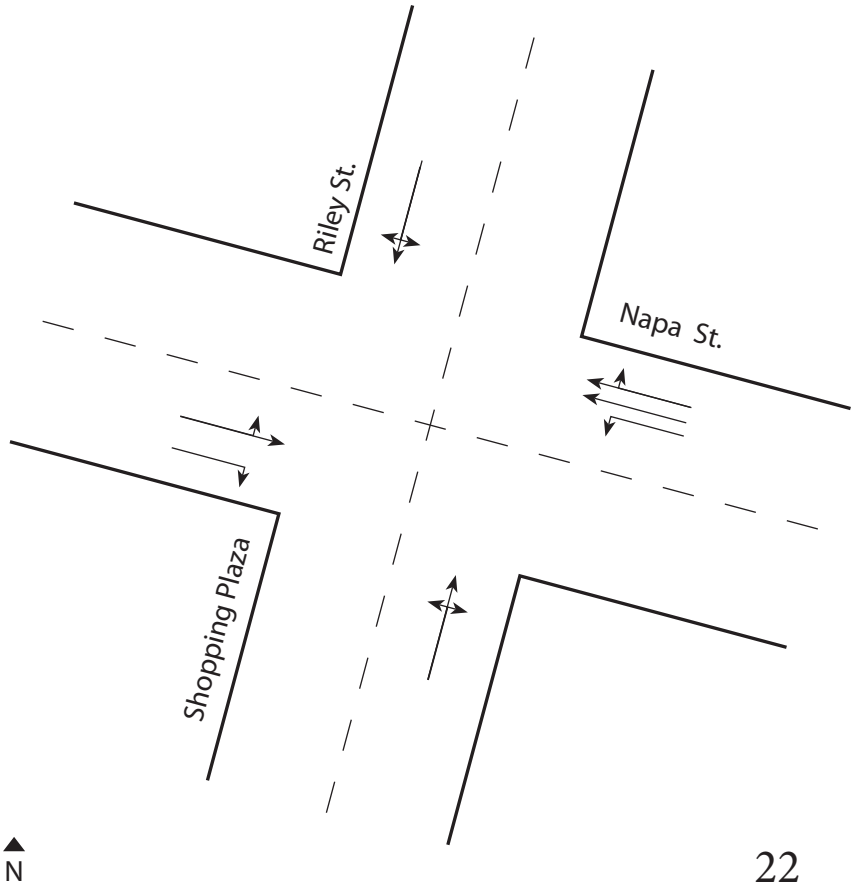

22

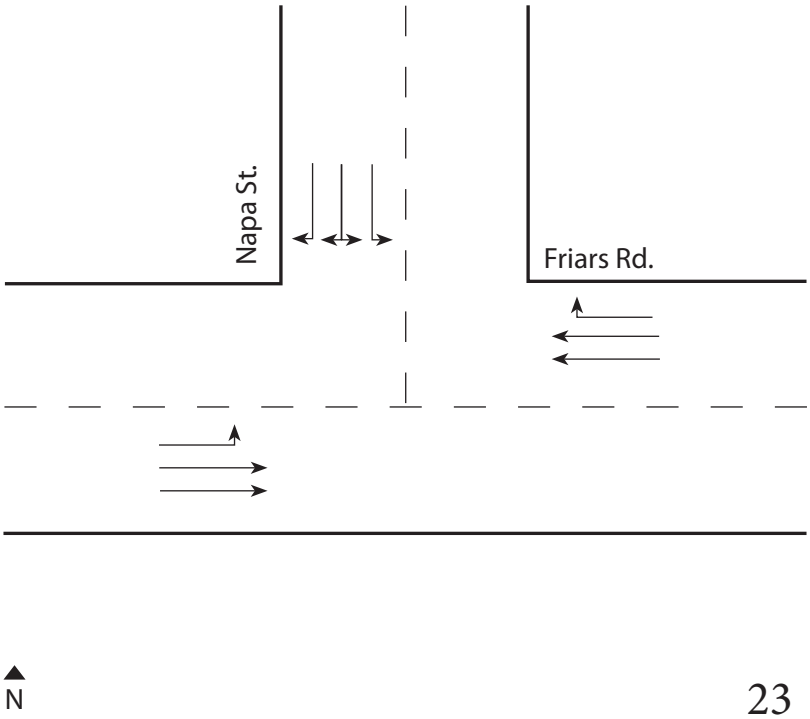

23

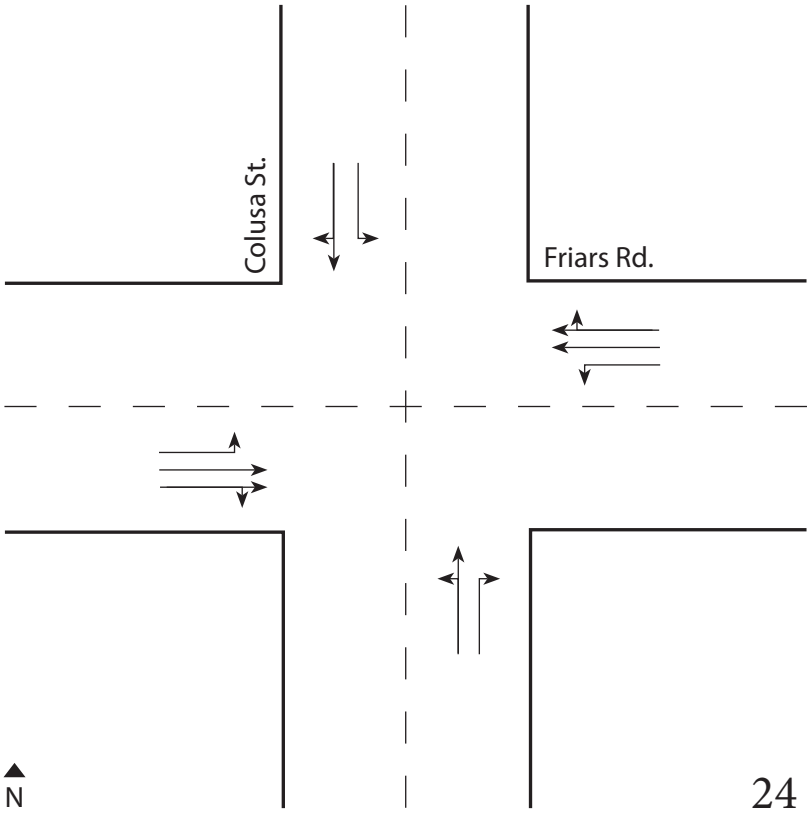

24

Morena Blvd Station Area Planning Study

Traffic Analysis Appendix:

Signal Timing Reports - Coordinated

INTERSECTION: Buenos St & Morena Blvd

Group Assignment:
Field Master Assignment: NONE

N/S Street Name: MORENA BL
E/W Street Name: BUENOS ST

Last Database Change:
System Ref. Number:

N

Phase Timing - Bank 1
F + Phase + Row

Row	Column # ---> / Phase # --->	1	2	3	4	5	6	7	8
		Morena			Buenos		Morena		Buenos
0	Ped Walk		7		7		7		7
1	Ped FDW		12		16		8		15
2	Min Green	4	7		4	4	7		4
3	Type 3 Limit								
4	Add/Veh								
5	Veh Extn	2.0	3.9		2.0	2.0	3.9		2.0
6	Max Gap	2.0	3.9		2.0	2.0	3.9		2.0
7	Min Gap	2.0	0.2		2.0	2.0	0.2		2.0
8	Max Limit	30	60		40	30	60		40
9	Max Limit 2								
A	Bus Adv								
B	Call to Phs								
C	Reduce By		0.1				0.1		
D	Every		0.8				0.8		
E	Yellow	3.4	3.9		3.9	3.4	3.9		3.9
F	Red Clear	1.0	1.0		1.0	1.0	1.0		1.0

<F Page>

Preempt Timing
F + E + Row

	E
RR-1 Delay	
RR-1 Clear	
EV-A Delay	0
EV-A Clear	0
EV-B Delay	0
EV-B Clear	0
EV-C Delay	0
EV-C Clear	0
EV-D Delay	0
EV-D Clear	0
RR-2 Delay	
RR-2 Clear	
View EV Delay	---
View EV Clear	---
View RR Delay	---
View RR Clear	---

Phase Functions <F Page>
F + F + Row

	F	Row
Permit	12_456_8	0
Red Lock		1
Yellow Lock		2
Min Recall		3
Ped Recall		4
Peds (View)	_2_4_6_8	5
Rest In Walk		6
Red Rest		7
Dbl Entry	___4___8	8
Max Recall		9
Soft Recall	_2___6__	A
Max 2		B
Cond Serv		C
Ped Lock	12345678	D
Yellow Start	_2___6__	E
1st Phases	___4___8	F

Max Initial	0	F + 0 + E
Red Revert	5.0	F + 0 + F
All Red Start	0.0	F + C + O

Start / Revert Times

Drop Number	4	C + 0 + 0
Zone Number	4	C + 0 + 1
Area Number	5	C + 0 + 2
Area Address	87	C + 0 + 3
QuicNet Channel	COM52:	(QuicNet)

Communication Addresses

Overlap Timing

	Row	9 Green Clear	C Yellow Change	D Red Clear	0 Load-Switch #
Overlap A	A				
Overlap B	B				
Overlap C	C				
Overlap D	D				

<F Page>
F + COLOR +

<D Page>
D + 0 + OVERLAP

Manual Plan	0	C + A + 1
Manual Offset	0	C + B + 1

Manual Selection

Manual Plan
0 = Automatic
1-9 = Plan 1-9
14 = Free
15 = Flash

Manual Offset
0 = Automatic
1 = Offset A
2 = Offset B
3 = Offset C

Timing Sheet By: LEM
Approved By: FLG
Drawing Number: 26733-1-d
Timing Implemented On: 4/21/10

C + F + O

	F	Row
Free Lag	_2_4_6_8	0

Lag Phases <C Page>

Downtime Flash	255	(minutes)

Downtime Before Auto Manual Flash
F + 0 +8

Disable Ports	234

Disable Communication Ports
D + D + 9

6

INTERSECTION: Buenos St & Morena Blvd

Row	Time	Function	Day of Week	Column F Phases/Bits
0	00 : 01	E	1234567	1_____
1				
2				
3				
4				
5				
6				
7				
8				
9				
A				
B				
C				
D				
E				
F				

TOD Function

7 + ROW

<D Page>

D + F + ROW

T.O.D. Functions
0 = Permitted Phases
1 = Red Lock
2 = Yellow Lock
3 = Veh Min Recall
4 = Ped Recall
5 =
6 = Rest In Walk
7 = Red Rest
8 = Double Entry
9 = Veh Max Recall
A = Veh Soft Recall
B = Maximum 2
C = Conditional Service
D = Free Lag Phases
E = Bit 1 - Local Override
Bit 2 - Phase Bank 2
Bit 3 - Phase Bank 3
Bit 4 - Disable Detector OFF Monitor
Bit 7 - Detector Count Monitor
Bit 8 - Real Time Split Monitor
F = Output Bits 1 thru 4

Row		F
0		
1	RR Overlap A - Phases	
2	RR Overlap B - Phases	
3	RR Overlap C - Phases	
4	RR Overlap D - Phases	
5	Ped 2P	_2_____
6	Ped 6P	_____6__
7	Ped 4P	___4____
8	Ped 8P	_____8
9	Yellow Flash Phases	
A	Overlap A - Phases	
B	Overlap B - Phases	
C	Overlap C - Phases	
D	Overlap D - Phases	
E	Restricted Phases	
F	Assign 5 Outputs	

Configuration

E + F + ROW

<E Page>

Day of Week

1 = Sunday
2 = Monday
3 = Tuesday
4 = Wednesday
5 = Thursday
6 = Friday
7 = Saturday

Row		E
0	Exclusive Phases	
1	RR-1 Clear Phases	
2	RR-2 Clear Phases	
3	RR-2 Limited Service	
4	Prot / Perm Phases	
5	Overlap A - Green Omit	
6	Overlap B - Green Omit	
7	Overlap C - Green Omit	
8	Overlap D - Green Omit	
9	Overlap Yellow Flash	
A	EV-A Phases	_2__5___
B	EV-B Phases	___4____
C	EV-C Phases	1____6__
D	EV-D Phases	_____8
E	Extra 1 Config. Bits	1_345___
F	IC Select (Interconnect)	_2_____

For access, set F + 9 + E = 1

Configuration

E + E + ROW

Extra 1 Flags
1 = TBC Type 1
2 = NEMA Ext. Coord
3 = Auto Daylight Savings
4 = EV Advance
5 = Remote Download
6 = Special Event
7 = Prelimed Operation
8 = Split Ring Operation

IC Select Flags
1 =
2 = Modem
3 = 7-Wire Slave
4 = Flash / Free
5 =
6 = Simplex Master
7 = 7-Wire Master
8 = Offset Interrupter

Assign 5 Outputs
1 = Right Turn Overlap
2 = TOD Outputs
3 = EV Beacon - Steady
4 = EV Beacon - Flashing
5 = Special Event Outputs
6 = Phase 3 & 7 Ped
7 = Advanced Warning Sign
8 =

Time and Date

8-0 Hour, Minute, Day-of-Week
8-1 Day-of-Month, Year, Month
8-F Seconds

Disable Parity	0	D+B+0

Dial-Up Telephone Communications
(If set to a non-zero value, parity will be disabled)

Program Information

C + C + 0 = program
C + C + F = version

Remote Download

C + 0 + 4 = 1 -255
w/ E + E + E bit 5 on

INTERSECTION: Buenos St & Morena Blvd

223 Program

Row	1 Delay	3 Carry-over
0		
1		1.8
2		
3		
4		
5		
6		
7	5.0	
8	4.0	
9		
A		
B		
C		
D		
E	---	---
F	---	---

Detector Name	332 Input File	Detector Number
	1I1	14
	2I2U	1
	2I2L	5
	2I3U	21
	2I3L	25
	2I4	9
	3I5	16
	4I6U	3
	4I6L	7
	4I7U	23
	4I7L	27
	4I8	11
	1I9U	18
	3I9L	20
---	---	---
---	---	---

Row	2 Delay	4 Carry-over
0		
1		1.8
2		
3		
4		
5		
6		
7	5.0	
8		
9		
A		
B		
C		
D		
E	---	---
F	---	---

Detector Delay & Carryover <D Page>

Detector Name	332 Input File	Detector Number
	5J1	13
	6J2U	2
	6J2L	6
	6J3U	22
	6J3L	26
	6J4	10
	7J5	15
	8J6U	4
	8J6L	8
	8J7U	24
	8J7L	28
	8J8	12
	5J9U	17
	7J9L	19
---	---	---
---	---	---

D + X (across) + ROW

Row	Detector Numbers	E
A	1 2 3 4 5 6 7 8	12345678
B	9 10 11 12 -- -- -- --	1234____
C	13 14 15 16 17 18 19 20	12345678
D	-- -- -- -- 21 22 23 24	____5678
E	-- -- -- -- -- -- -- --	1234____
F	-- 25 26 27 28 -- -- --	_2345___

Active Detectors <D Page>

Row		0 Detector #
0		
1	System Det. # 1	0
2	System Det. # 2	0
3	System Det. # 3	0
4	System Det. # 4	0
5	System Det. # 5	0
6	System Det. # 6	0
7	System Det. # 7	0
8	System Det. # 8	0

System Detectors <D Page>

Max ON (min)	5	D+A+E
Max OFF (min)	60	D+A+F

Detector Failure Monitor

Phase Number	0	F+C+1
Time Before Yellow	0.0	F+C+3

Advance Warning Beacon - Sign 1

Phase Number	0	F+D+1
Time Before Yellow	0.0	F+D+3

Advance Warning Beacon - Sign 2

Long Failure	0.5	F+0+6
Short Failure	0.5	F+0+7

Power Cycle Correction (Default = 0.5)

Printed on 4/16/2010 1:11 PM

INTERSECTION: Buenos St & Morena Blvd

Coordination Timing By: G
Implemented On: 10/27/2009

Row	Plan Name --->	1	2 MID	3	4	5 AM	6 PM	7	8	9
0	Cycle Length		96			55	68			
1	Phase 1 - ForceOff		42			30	30			
2	Phase 2 - ForceOff		0			0	0			
3	Phase 3 - ForceOff									
4	Phase 4 - ForceOff		30			20	20			
5	Phase 5 - ForceOff		45			33	33			
6	Phase 6 - ForceOff		0			0	0			
7	Phase 7 - ForceOff									
8	Phase 8 - ForceOff		30			20	20			
9	Ring Offset									
A	Offset A		13			40	5			
B	Offset B									
C	Offset C									
D	Permissive		10			6	7			
E	Hold Release		255			255	255			
F	Ped Shift		0			0	0			

Coordination <C Page>
C + Plan + ROW

FOR OBSERVATION ONLY

Master Plan	C + A + 2
Current Plan	C + A + 3
Next Plan	C + A + 4
T.O.D. Plan	C + A + 5
Master Cycle	C + A + 0
Ring A Cycle	C + B + 0
Ring B Cycle	C + D + 0
Min Cycle	C + A + E
Max Cycle	C + B + E

Row	Time	Plan	Offset	Day of Week
0	06 : 30	5	A	_23456_
1	08 : 30	E	A	1234567
2	10 : 30	2	A	_23456_
3	13 : 30	6	A	_23456_
4	18 : 00	E	A	1234567
5				
6				
7				
8				
9				
A				
B				
C				
D				
E				
F				

TOD Coordination
<9 Key with C+0+9=1>

	E
Plan 1	
Plan 2	_2___6__
Plan 3	
Plan 4	
Plan 5	_2___6__
Plan 6	_2___6__
Plan 7	
Plan 8	
Plan 9	
Coord Ped*	
NEMA Hold	

Sync Phases
C + E + FUNCTION #

Row		F
0	Free Lag	_2_4_6_8
1	Plan 1 - Lag	
2	Plan 2 - Lag	_2_4_6_8
3	Plan 3 - Lag	
4	Plan 4 - Lag	
5	Plan 5 - Lag	_2_4_6_8
6	Plan 6 - Lag	_2_4_6_8
7	Plan 7 - Lag	
8	Plan 8 - Lag	
9	Plan 9 - Lag	
A	Coord Max *	
B	Coord Lag *	
C		
D		
E		
F		

Lag Phases <C Page>
C + F + FUNCTION #

Transition Type	0

TBC Transition
C + D + D

Transition Type
0 = Shortway
Non-zero = Lengthen

Plan Select
1 thru 9 = Coordination Plan 1 thru 9
14 or E = Free
15 or F = Flash

① BAD Ø8 LOOPS

INTERSECTION: Buenos St & W Morena Bl

223 Program

Group Assignment:
Field Master Assignment:

N/S Street Name: W MORENA BL
E/W Street Name: BUENOS ST

Last Database Change:
System Ref. Number:

N

Row	Column # --->	1	2	3	4	5	6	7	8
		W. Morena	Buenos		Buenos		W. Morena		Buenos
	Phase # --->	1	2	3	4	5	6	7	8
0	Ped Walk		7				7		7
1	Ped FDW		15				9		28
2	Min Green	4	7		4	4	7		6① ~~4~~
3	Type 3 Limit								
4	Add/Veh								
5	Veh Extn	2.0	3.6		2.0	2.0	4.3		2.0
6	Max Gap	2.0	3.6		2.0	2.0	4.3		2.0
7	Min Gap	2.0	0.2		2.0	2.0	0.2		2.0
8	Max Limit	30	60		40	30	60		40
9	Max Limit 2								
A	Bus Adv								
B	Call to Phs								
C	Reduce By		0.1				0.1		
D	Every		0.9				0.7		
E	Yellow	3.4	4.8		3.9	3.4	4.5		3.9
F	Red Clear	1.0	1.0		1.0	1.0	1.0		1.0

Phase Timing - Bank 1
F + Phase + Row

<F Page>

	E
RR-1 Delay	
RR-1 Clear	
EV-A Delay	0
EV-A Clear	0
EV-B Delay	
EV-B Clear	
EV-C Delay	0
EV-C Clear	0
EV-D Delay	
EV-D Clear	
RR-2 Delay	
RR-2 Clear	
View EV Delay	---
View EV Clear	---
View RR Delay	---
View RR Clear	---

Preempt Timing
F + E + Row

	F	Row
Permit	12_456_8	0
Red Lock		1
Yellow Lock		2
Min Recall	①8	3
Ped Recall		4
Peds (View)	_2___6_8	5
Rest In Walk		6
Red Rest		7
Dbl Entry	___4___8	8
Max Recall		9
Soft Recall	_2___6__	A
Max 2		B
Cond Serv		C
Ped Lock	12345678	D
Yellow Start	_2___6__	E
1st Phases	___4___8	F

Phase Functions <F Page>
F + F + Row

Max Initial	0	F + 0 + E
Red Revert	5.0	F + 0 + F
All Red Start	0.0	F + C + O

Start / Revert Times

Drop Number	8	C + 0 + 0
Zone Number	8	C + 0 + 1
Area Number	5	C + 0 + 2
Area Address	91	C + 0 + 3
QuicNet Channel	COM52:	(QuicNet)

Communication Addresses

C + F + O	F	Row
Free Lag	_2_4_6_8	0

Lag Phases <C Page>

Overlap Timing

	Row	9 Green Clear	C Yellow Change	D Red Clear	0 Load-Switch #
Overlap A	A				
Overlap B	B				
Overlap C	C				
Overlap D	D				

<F Page>
F + COLOR +

<D Page>
D + 0 + OVERLAP

Manual Plan	0	C + A + 1
Manual Offset	0	C + B + 1

Manual Selection

Manual Plan
0 = Automatic
1-9 = Plan 1-9
14 = Free
15 = Flash

Manual Offset
0 = Automatic
1 = Offset A
2 = Offset B
3 = Offset C

Downtime Flash	255	(minutes)

Downtime Before Auto Manual Flash
F + 0 +8

Disable Ports	234

Disable Communication Ports
D + D + 9

Timing Sheet By: LEM
Approved By: FLG
Drawing Number: 20407-5-D
Timing Implemented On: 4/21/10

INTERSECTION: Buenos St & W Morena Bl

Row	Time	Function	Day of Week	Column F Phases/Bits
0	00 : 01	E	1234567	1_____
1				
2				
3				
4				
5				
6				
7				
8				
9				
A				
B				
C				
D				
E				
F				

TOD Function

7 + ROW

<D Page>

D + F + ROW

T.O.D. Functions
0 = Permitted Phases
1 = Red Lock
2 = Yellow Lock
3 = Veh Min Recall
4 = Ped Recall
5 =
6 = Rest In Walk
7 = Red Rest
8 = Double Entry
9 = Veh Max Recall
A = Veh Soft Recall
B = Maximum 2
C = Conditional Service
D = Free Lag Phases
E = Bit 1 - Local Override
Bit 2 - Phase Bank 2
Bit 3 - Phase Bank 3
Bit 4 - Disable Detector OFF Monitor
Bit 7 - Detector Count Monitor
Bit 8 - Real Time Split Monitor
F = Output Bits 1 thru 4

Row		F
0		
1	RR Overlap A - Phases	
2	RR Overlap B - Phases	
3	RR Overlap C - Phases	
4	RR Overlap D - Phases	
5	Ped 2P	_2_____
6	Ped 6P	_____6__
7	Ped 4P	
8	Ped 8P	_____8
9	Yellow Flash Phases	
A	Overlap A - Phases	
B	Overlap B - Phases	
C	Overlap C - Phases	
D	Overlap D - Phases	
E	Restricted Phases	
F	Assign 5 Outputs	

Configuration

<E Page>

E + F + ROW

Day of Week

1 = Sunday
2 = Monday
3 = Tuesday
4 = Wednesday
5 = Thursday
6 = Friday
7 = Saturday

Assign 5 Outputs
1 = Right Turn Overlap
2 = TOD Outputs
3 = EV Beacon - Steady
4 = EV Beacon - Flashing
5 = Special Event Outputs
6 = Phase 3 & 7 Ped
7 = Advanced Warning Sign
8 =

Row		E
0	Exclusive Phases	
1	RR-1 Clear Phases	
2	RR-2 Clear Phases	
3	RR-2 Limited Service	
4	Prot / Perm Phases	
5	Overlap A - Green Omit	
6	Overlap B - Green Omit	
7	Overlap C - Green Omit	
8	Overlap D - Green Omit	
9	Overlap Yellow Flash	
A	EV-A Phases	_2__5___
B	EV-B Phases	
C	EV-C Phases	1____6__
D	EV-D Phases	
E	Extra 1 Config. Bits	1_345___
F	IC Select (Interconnect)	_2_____

Configuration

For access, set F + 9 + E = 1

E + E + ROW

Extra 1 Flags
1 = TBC Type 1
2 = NEMA Ext. Coord
3 = Auto Daylight Savings
4 = EV Advance
5 = Remote Download
6 = Special Event
7 = Prelimed Operation
8 = Split Ring Operation

IC Select Flags
1 =
2 = Modem
3 = 7-Wire Slave
4 = Flash / Free
5 =
6 = Simplex Master
7 = 7-Wire Master
8 = Offset Interrupter

Time and Date

8-0 Hour, Minute, Day-of-Week
8-1 Day-of-Month, Year, Month
8-F Seconds

Disable Parity	0	D+B+0

Dial-Up Telephone Communications

(If set to a non-zero value, parity will be disabled)

Program Information

C + C + 0 = program
C + C + F = version

Remote Download

C + 0 + 4 = 1 -255
w/ E + E + E bit 5 on

INTERSECTION: Buenos St & W Morena Bl — 223 Program

Row	1 Delay	3 Carry-over	Detector Name	332 Input File	Detector Number
0				1I1	14
1		1.8		2I2U	1
2				2I2L	5
3				2I3U	21
4				2I3L	25
5				2I4	9
6				3I5	16
7	5.0			4I6U	3
8				4I6L	7
9	7.0			4I7U	23
A				4I7L	27
B				4I8	11
C				1I9U	18
D				3I9L	20
E	---	---	---	---	---
F	---	---	---	---	---

Row	2 Delay	4 Carry-over	Detector Name	332 Input File	Detector Number
0				5J1	13
1		1.8		6J2U	2
2				6J2L	6
3				6J3U	22
4				6J3L	26
5				6J4	10
6				7J5	15
7	10.0			8J6U	4
8				8J6L	8
9				8J7U	24
A				8J7L	28
B				8J8	12
C				5J9U	17
D				7J9L	19
E	---	---	---	---	---
F	---	---	---	---	---

Detector Delay & Carryover <D Page>

D + X (across) + ROW

Row	Detector Numbers	E
A	1 2 3 4 5 6 7 8	12345678
B	9 10 11 12 -- -- -- --	1234____
C	13 14 15 16 17 18 19 20	12345678
D	-- -- -- -- 21 22 23 24	____5678
E	-- -- -- -- -- -- -- --	1234____
F	-- 25 26 27 28 -- -- --	_2345___

Active Detectors <D Page>

Row		0 Detector #
0		
1	System Det. # 1	0
2	System Det. # 2	0
3	System Det. # 3	0
4	System Det. # 4	0
5	System Det. # 5	0
6	System Det. # 6	0
7	System Det. # 7	0
8	System Det. # 8	0

System Detectors <D Page>

Max ON (min)	5	D+A+E
Max OFF (min)	60	D+A+F

Detector Failure Monitor

Phase Number	0	F+C+1
Time Before Yellow	0.0	F+C+3

Advance Warning Beacon - Sign 1

Phase Number	0	F+D+1
Time Before Yellow	0.0	F+D+3

Advance Warning Beacon - Sign 2

Long Failure	0.5	F+0+6
Short Failure	0.5	F+0+7

Power Cycle Correction (Default = 0.5)

INTERSECTION: Buenos St & W Morena Bl

223 Program

Coordination Timing By: LG
Implemented On: 10/27/2009

Row	Column # --->	Plan 1	2	3	4	5	6	7	8	9
	Plan Name --->		MID		AM	PM				
0	Cycle Length		96		55	68				
1	Phase 1 - ForceOff		50		40	30				
2	Phase 2 - ForceOff		0		0	0				
3	Phase 3 - ForceOff									
4	Phase 4 - ForceOff		38		25	20				
5	Phase 5 - ForceOff		50		40	30				
6	Phase 6 - ForceOff		0		0	0				
7	Phase 7 - ForceOff									
8	Phase 8 - ForceOff		38		25	20				
9	Ring Offset									
A	Offset A		46		11	8				
B	Offset B									
C	Offset C									
D	Permissive		10		6	7				
E	Hold Release		255		255	255				
F	Ped Shift		0		5	0				

Coordination <C Page>

C + Plan + ROW

FOR OBSERVATION ONLY

Master Plan	C + A + 2
Current Plan	C + A + 3
Next Plan	C + A + 4
T.O.D. Plan	C + A + 5
Master Cycle	C + A + 0
Ring A Cycle	C + B + 0
Ring B Cycle	C + D + 0
Min Cycle	C + A + E
Max Cycle	C + B + E

Row	Time	Plan	Offset	Day of Week
0	06 : 30	4	A	_23456_
1	08 : 30	E	A	1234567
2	10 : 30	2	A	_23456_
3	13 : 30	E	A	1234567
4	15 : 30	5	A	_23456_
5	18 : 00	E	A	1234567
6				
7				
8				
9				
A				
B				
C				
D				
E				
F				

TOD Coordination

<9 Key with C+0+9=1>

	E
Plan 1	
Plan 2	_2__6__
Plan 3	
Plan 4	_2__6__
Plan 5	_2__6__
Plan 6	
Plan 7	
Plan 8	
Plan 9	
Coord Ped*	
NEMA Hold	

Sync Phases

C + E + FUNCTION #

Row		F
0	Free Lag	_2_4_6_8
1	Plan 1 - Lag	
2	Plan 2 - Lag	_2_4_6_8
3	Plan 3 - Lag	
4	Plan 4 - Lag	_2_4_6_8
5	Plan 5 - Lag	_2_4_6_8
6	Plan 6 - Lag	
7	Plan 7 - Lag	
8	Plan 8 - Lag	
9	Plan 9 - Lag	
A	Coord Max *	
B	Coord Lag *	
C		
D		
E		
F		

Lag Phases <C Page>

C + F + FUNCTION #

Transition Type	0

TBC Transition
C + D + D

Plan Select
1 thru 9 = Coordination Plan 1 thru 9
14 or E = Free
15 or F = Flash

Transition Type
0 = Shortway
Non-zero = Lengthen

INTERSECTION: LINDA VISTA RD @ MARIAN/MILDRED

Group Assignment: NONE
Field Master Assignment: NONE

N/S Street Name: MILDRED
E/W Street Name: LINDA VISTA

223 [illegible] gram (2A)

Last Database Change:
System Ref. Number: 882

Row	Column # ---> / Phase # --->	1	2	3	4	5	6	7	8
		Linda Vista Rd			Marian/Mildred		Linda Vista Rd		
		Phase							
		↓	→		↑	4+5 ←	←		
0	Ped Walk		7		7		7		
1	Ped FDW		10		22		15		
2	Min Green	4	10		7	4	10		
3	Type 3 Limit								
4	Add/Veh		1.6				1.6		
5	Veh Extn	2.0	6.5		2.0	2.0	5.3		
6	Max Gap	2.0	6.5		2.0	2.0	5.3		
7	Min Gap	2.0	2.0		2.0	2.0	2.0		
8	Max Limit	30	60		40	40	60		
9	Max Limit 2								
A	Bus Adv								
B	Call to Phs								
C	Reduce By		0.1				0.1		
D	Every		0.7				0.9		
E	Yellow	3.4	3.9		3.9	3.4	4.6		
F	Red Clear	1.0	1.0		1.0	1.0	1.0		
	Grade								

Phase Timing - Bank 1
F + Phase + Row

<F Page>

	E
RR-1 Delay	
RR-1 Clear	
EV-A Delay	
EV-A Clear	
EV-B Delay	
EV-B Clear	
EV-C Delay	0
EV-C Clear	0
EV-D Delay	
EV-D Clear	
RR-2 Delay	
RR-2 Clear	
View EV Delay	---
View EV Clear	---
View RR Delay	---
View RR Clear	---

Preempt Timing
F + E + Row

Row		F
0	Permit	12_456__
1	Red Lock	
2	Yellow Lock	
3	Min Recall	_2___6__
4	Ped Recall	
5	Peds (View)	_2_4_6__
6	Rest In Walk	
7	Red Rest	
8	Dbl Entry	
9	Max Recall	
A	Soft Recall	
B	Max 2	
C	Cond Serv	
D	Ped Lock	12345678
E	Yellow Start	_2___6__
F	1st Phases	___4___

Phase Functions <F Page>
F + F + Row

Max Initial	28	F + 0 + E
Red Revert	5.0	F + 0 + F
All Red Start	0.0	F + C + O

Start / Revert Times

Drop Number	7	C + 0 + 0
Zone Number	7	C + 0 + 1
Area Number	5	C + 0 + 2
Area Address	104	C + 0 + 3
QuicNet Channel	COM51:	(QuicNet)

Communication Addresses

Overlap Timing

	Row	9 Green Clear	C Yellow Change	D Red Clear	0 Load-Switch #
Overlap A	A				
Overlap B	B				
Overlap C	C				
Overlap D	D				

<F Page>
F + COLOR +

<D Page>
D + 0 + OVERLAP

Manual Plan	0	C + A + 1
Manual Offset	0	C + B + 1

Manual Selection

Manual Plan
0 = Automatic
1-9 = Plan 1-9
14 = Free
15 = Flash

Manual Offset
0 = Automatic
1 = Offset A
2 = Offset B
3 = Offset C

C + F + O

	F	Row
Free Lag	_2_4_6__	0

Lag Phases <C Page>

Downtime Flash	255	(minutes)

Downtime Before Auto Manual Flash
F + 0 +8

Disable Ports	_234____

Disable Communication Ports
D + D + 9

Timing Sheet By: JS2
Approved By: FLG
Drawing Number: 29468-2
Timing Implemented On: 6/1/10

Printed on 4/19/2010 3:59 PM

INTERSECTION: LINDA VISTA RD @ MARIAN/MILDRED

Row	Time	Function	Day of Week	Column F Phases/Bits
0	00 : 01	E	1234567	1_____
1	:			
2	:			
3	:			
4	:			
5	:			
6	:			
7	:			
8	:			
9	:			
A	:			
B	:			
C	:			
D	:			
E	:			
F	:			

TOD Function

7 + ROW

<D Page>

D + F + ROW

T.O.D. Functions
0 = Permitted Phases
1 = Red Lock
2 = Yellow Lock
3 = Veh Min Recall
4 = Ped Recall
5 =
6 = Rest In Walk
7 = Red Rest
8 = Double Entry
9 = Veh Max Recall
A = Veh Soft Recall
B = Maximum 2
C = Conditional Service
D = Free Lag Phases
E = Bit 1 - Local Override
Bit 2 - Phase Bank 2
Bit 3 - Phase Bank 3
Bit 4 - Disable Detector OFF Monitor
Bit 7 - Detector Count Monitor
Bit 8 - Real Time Split Monitor
F = Output Bits 1 thru 4

Row		F
0		
1	RR Overlap A - Phases	
2	RR Overlap B - Phases	
3	RR Overlap C - Phases	
4	RR Overlap D - Phases	
5	Ped 2P	_2_____
6	Ped 6P	____6__
7	Ped 4P	___4___
8	Ped 8P	
9	Yellow Flash Phases	
A	Overlap A - Phases	____5__
B	Overlap B - Phases	
C	Overlap C - Phases	
D	Overlap D - Phases	
E	Restricted Phases	
F	Assign 5 Outputs	1_____

Configuration

<E Page>

E + F + ROW

Day of Week

1 = Sunday
2 = Monday
3 = Tuesday
4 = Wednesday
5 = Thursday
6 = Friday
7 = Saturday

Row		E
0	Exclusive Phases	
1	RR-1 Clear Phases	
2	RR-2 Clear Phases	
3	RR-2 Limited Service	
4	Prot / Perm Phases	
5	Overlap A - Green Omit	
6	Overlap B - Green Omit	
7	Overlap C - Green Omit	
8	Overlap D - Green Omit	
9	Overlap Yellow Flash	
A	EV-A Phases	
B	EV-B Phases	
C	EV-C Phases	1____6__
D	EV-D Phases	
E	Extra 1 Config. Bits	1_345___
F	IC Select (Interconnect)	_2_____

Configuration

For access, set F + 9 + E = 1

E + E + ROW

Extra 1 Flags
1 = TBC Type 1
2 = NEMA Ext. Coord
3 = Auto Daylight Savings
4 = EV Advance
5 = Remote Download
6 = Special Event
7 = Pretimed Operation
8 = Split Ring Operation

IC Select Flags
1 =
2 = Modem
3 = 7-Wire Slave
4 = Flash / Free
5 =
6 = Simplex Master
7 = 7-Wire Master
8 = Offset Interrupter

Assign 5 Outputs
1 = Right Turn Overlap
2 = TOD Outputs
3 = EV Beacon - Steady
4 = EV Beacon - Flashing
5 = Special Event Outputs
6 = Phase 3 & 7 Ped
7 = Advanced Warning Sign
8 =

Time and Date

8-0 Hour, Minute, Day-of-Week
8-1 Day-of-Month, Year, Month
8-F Seconds

Disable Parity	0

D+B+0

Dial-Up Telephone Communications

(If set to a non-zero value, parity will be disabled)

Program Information

C + C + 0 = program
C + C + F = version

Remote Download

C + 0 + 4 = 1 -255
w/ E + E + E bit 5 on

TERSECTION: LINDA VISTA RD @ MARIAN/MILI ED

223 Program

Row	1 Delay	3 Carry-over
0		
1		
2		
3		
4		
5		
6		
7	10.0	
8		
9		
A	10.0	
B		
C		
D		
E	---	---
F	---	---

Detector Name	332 Input File	Detector Number
	1I1	14
	2I2U	1
	2I2L	5
	2I3U	21
	2I3L	25
	2I4	9
	3I5	16
	4I6U	3
	4I6L	7
	4I7U	23
	4I7L	27
	4I8	11
	1I9U	18
	3I9L	20
---	---	---
---	---	---

Row	2 Delay	4 Carry-over
0		
1		
2		
3		
4		
5		
6		
7		
8		
9		
A		
B		
C		
D		
E	---	---
F	---	---

Detector Delay & Carryover <D Page>

Detector Name	332 Input File	Detector Number
	5J1	13
	6J2U	2
	6J2L	6
	6J3U	22
	6J3L	26
	6J4	10
	7J5	15
	8J6U	4
	8J6L	8
	8J7U	24
	8J7L	28
	8J8	12
	5J9U	17
	7J9L	19
---	---	---
---	---	---

D + X (across) + ROW

Row	Detector Numbers	E
A	1 2 3 4 5 6 7 8	12345678
B	9 10 11 12 -- -- -- --	1234____
C	13 14 15 16 17 18 19 20	12345678
D	-- -- -- -- 21 22 23 24	____5678
E	-- -- -- -- -- -- -- --	1234____
F	-- 25 26 27 28 -- -- --	_2345___

Active Detectors <D Page>

Row		0 Detector #
0		
1	System Det. # 1	
2	System Det. # 2	
3	System Det. # 3	
4	System Det. # 4	
5	System Det. # 5	
6	System Det. # 6	
7	System Det. # 7	
8	System Det. # 8	

System Detectors <D Page>

Max ON (min)	5	D+A+E
Max OFF (min)	60	D+A+F

Detector Failure Monitor

Phase Number		F+C+1
Time Before Yellow		F+C+3

Advance Warning Beacon - Sign 1

Phase Number		F+D+1
Time Before Yellow		F+D+3

Advance Warning Beacon - Sign 2

Long Failure	0.5	F+0+6
Short Failure	0.5	F+0+7

Power Cycle Correction (Default = 0.5)

Printed on 4/16/2010 1:44 PM

INTERSECTION: LINDA VISTA RD @ MARIAN/MILDRED

Coordination Timing By: KH&A
Implemented On: 2/3/2010

Row	Column # —>	Plan 1	Plan 2	Plan 3	Plan 4	Plan 5 AM	Plan 6 PM	Plan 7	Plan 8	Plan 9
	Plan Name —>									
0	Cycle Length					110	136			
1	Phase 1 - ForceOff					47	58			
2	Phase 2 - ForceOff					0	0			
3	Phase 3 - ForceOff									
4	Phase 4 - ForceOff					31	44			
5	Phase 5 - ForceOff					80	86			
6	Phase 6 - ForceOff					0	0			
7	Phase 7 - ForceOff									
8	Phase 8 - ForceOff									
9	Ring Offset					8	127			
A	Offset A									
B	Offset B									
C	Offset C									
D	Permissive					11	14			
E	Hold Release					255	255			
F	Ped Shift					0	0			

Coordination
C + Plan + ROW
<C Page>

FOR OBSERVATION ONLY

Master Plan	C + A + 2
Current Plan	C + A + 3
Next Plan	C + A + 4
T.O.D. Plan	C + A + 5
Master Cycle	C + A + 0
Ring A Cycle	C + B + 0
Ring B Cycle	C + D + 0
Min Cycle	C + A + E
Max Cycle	C + B + E

Row	Time	Plan	Offset	Day of Week
0	06 : 30	5	A	_23456_
1	09 : 00	E	A	1234567
2	13 : 30	6	A	_23456_
3	18 : 00	E	A	1234567
4	:			
5	:			
6	:			
7	:			
8	:			
9	:			
A	:			
B	:			
C	:			
D	:			
E	:			
F	:			

TOD Coordination
<9 Key with C+0+9=1>

	E
Plan 1	
Plan 2	
Plan 3	
Plan 4	
Plan 5	_2__6__
Plan 6	_2__6__
Plan 7	
Plan 8	
Plan 9	
Coord Ped*	
NEMA Hold	

Sync Phases
C + E + FUNCTION #

Row		F
0	Free Lag	_2_4_6__
1	Plan 1 - Lag	
2	Plan 2 - Lag	
3	Plan 3 - Lag	
4	Plan 4 - Lag	
5	Plan 5 - Lag	_2_4_6__
6	Plan 6 - Lag	_2_4_6__
7	Plan 7 - Lag	
8	Plan 8 - Lag	
9	Plan 9 - Lag	
A	Coord Max *	
B	Coord Lag *	
C		
D		
E		
F		

Lag Phases <C Page>
C + F + FUNCTION #

Transition Type	0

TBC Transition
C + D + D

Plan Select
1 thru 9 = Coordination Plan 1 thru 9
14 or E = Free
15 or F = Flash

Transition Type
0 = Shortway
Non-zero = Lengthen

FIELD MASTER

210

COORDINATION TIMING

Feature		Plan 1	2	3	4	5	6	7	8	9	
Cycle	0	98	96	120							0
Plan Up	1										1
Plan Down	2										2

Keystrokes: C - Plan - Feature

TIME BASE COORDINATION

EVENTS 1 - 16

	Time	Plan	Offset	Day of Week S 1	M 2	T 3	W 4	T 5	F 6	S 7
0	0630	1	A		X	X	X	X	X	
1	0900	2	A	X						X
2	1030	2	A		X	X	X	X	X	
3	1330	3	A		X	X	X	X	X	
4	1800	2	A		X	X	X	X	X	
5	1900	E	A	X						X
6	2000	E	A	X	X	X	X	X	X	X
7										
8										
9										
A										
B										
C										
D										
E										
F										

Keystrokes: 9 - Event #

Plan 1-9 TBC Coordination
D Traffic Responsive
E Free (Non-coordinated)
F Flash

Number of Locals
(D-0-0) = 9

Submaster Address
(C-0-0) = ____

Manual Plan
(C-A-1) = 0

Auto = 0
Free = 14
Flash = 15

8-0 Hour, Minute, Day of Week
8-1 Day of Month, Year, Month
8-F Seconds

0 0
1 0
2 0
3 0
4 0
5 0
6 0
7 0
8 0
9 0

A			b
3	0	4	A

LEVEL PLAN OFFSET

LEVEL:
1=Manual Control
2=Central Master Control
3=Time of Day
4=Traffic Responsive
5=Backup Plan

PLAN:
[See above]

OFFSET:
A=Inbound
B=Outbound
C=Average

Master Controller is at LINDA VISTA RD & MORENA BL.

SYSTEM NAME	MORENA

LOCAL INTERSECTIONS

	Address	Intersection Name
C F 1	1	FRIARS RD. & NAPA ST.
	2	RILEY ST. & NAPA ST.
	3	LINDA VISTA RD & NAPA ST.
	4	LINDA VISTA RD & MORENA BL.
	5	MORENA BL. & NAPA ST./SHERMAN ST.
	6	MORENA BL & W. MORENA BL (S)
	7	BUENOS AV. & MORENA BL.
	8	BUENOS AV & W. MORENA BL.
C F 2	9	VEGA ST & W. MORENA BL.
	10	
	11	
	12	
	13	
	14	
	15	
	16	
C F 3	17	
	18	
	19	
	20	
	21	
	22	
	23	
	24	
C F 4	25	
	26	
	27	
	28	
	29	
	30	
	31	
	32	

LOCAL RESPONSE DISPLAY

Local Response 1 - 8 (C-F-1)

0 1 2 3 4 5 6 7 8 9

F			1
C	0	4	8

MASTER TIMIMG

KEY	CONTROLLER NUMBER
C-F-1	1 - 8
C-F-2	9 - 16
C-F-3	17 - 24
C-F-4	25 - 32

ITERSECTION: LINDA VISTA RD @ MORENA BL

Group Assignment: NONE
Field Master Assignment: NONE

N/S Street Name: MORENA BL
E/W Street Name: LINDA VISTA RD

223 ... ram (1)

Last Database Change:
System Ref. Number: 794

N

Row	Column # --->	1	2	3	4	5	6	7	8
			Morena Bl				Morena Bl		Linda Vista Rd
	Phase # --->		Phase						
			↑				↓		↙
0	Ped Walk								
1	Ped FDW								
2	Min Green		10				10		7
3	Type 3 Limit								
4	Add/Veh								
5	Veh Extn		3.9				4.7		3.6
6	Max Gap		3.9				4.7		3.6
7	Min Gap		0.2				0.2		0.2
8	Max Limit		40				40		40
9	Max Limit 2								
A	Bus Adv								
B	Call to Phs								
C	Reduce By		0.1				0.1		0.1
D	Every		0.8				0.7		0.9
E	Yellow		4.5				4.3		4.2
F	Red Clear		1.0				1.0		2.0
	Grade								

Phase Timing - Bank 1
F + Phase + Row

	E
RR-1 Delay	
RR-1 Clear	
EV-A Delay	0
EV-A Clear	0
EV-B Delay	
EV-B Clear	
EV-C Delay	0
EV-C Clear	0
EV-D Delay	0
EV-D Clear	0
RR-2 Delay	
RR-2 Clear	
View EV Delay	---
View EV Clear	---
View RR Delay	---
View RR Clear	---

Preempt Timing
F + E + Row

Row		F
0	Permit	_2___6_8
1	Red Lock	
2	Yellow Lock	
3	Min Recall	_2___6__
4	Ped Recall	
5	Peds (View)	
6	Rest In Walk	
7	Red Rest	
8	Dbl Entry	
9	Max Recall	
A	Soft Recall	
B	Max 2	
C	Cond Serv	
D	Ped Lock	12345678
E	Yellow Start	_2___6__
F	1st Phases	_____8

Phase Functions <F Page>
F + F + Row

<F Page>

Max Initial	0	F + 0 + E
Red Revert	5.0	F + 0 + F
All Red Start	0.0	F + C + O

Start / Revert Times

Drop Number	1	C + 0 + 0
Zone Number	1	C + 0 + 1
Area Number	5	C + 0 + 2
Area Address	78	C + 0 + 3
QuicNet Channel	COM51:	(QuicNet)

Communication Addresses

Overlap Timing

	Row	9 Green Clear	C Yellow Change	D Red Clear	0 Load-Switch #
Overlap A	A				
Overlap B	B				
Overlap C	C				
Overlap D	D				

<F Page>
F + COLOR +

<D Page>
D + 0 + OVERLAP

Manual Plan	0	C + A + 1
Manual Offset	0	C + B + 1

Manual Selection

Manual Plan
0 = Automatic
1-9 = Plan 1-9
14 = Free
15 = Flash

Manual Offset
0 = Automatic
1 = Offset A
2 = Offset B
3 = Offset C

C + F + O

	F	Row
Free Lag	_2___6_8	0

Lag Phases <C Page>

Downtime Flash	255 (minutes)

Downtime Before Auto Manual Flash
F + 0 +8

Disable Ports	_234____

Disable Communication Ports
D + D + 9

Timing Sheet By: JS2
Approved By: FLG
Drawing Number: 680119-D
Timing Implemented On: 6/1/10

Printed on 4/19/2010 3:56 PM

INTERSECTION: LINDA VISTA RD @ MORENA BL

Row	Time	Function	Day of Week	Column F Phases/Bits
0	00 : 01	E	1234567	1_____
1	:			
2	:			
3	:			
4	:			
5	:			
6	:			
7	:			
8	:			
9	:			
A	:			
B	:			
C	:			
D	:			
E	:			
F	:			

TOD Function

7 + ROW

<D Page>

D + F + ROW

T.O.D. Functions
0 = Permitted Phases
1 = Red Lock
2 = Yellow Lock
3 = Veh Min Recall
4 = Ped Recall
5 =
6 = Rest In Walk
7 = Red Rest
8 = Double Entry
9 = Veh Max Recall
A = Veh Soft Recall
B = Maximum 2
C = Conditional Service
D = Free Lag Phases
E = Bit 1 - Local Override
Bit 2 - Phase Bank 2
Bit 3 - Phase Bank 3
Bit 4 - Disable Detector OFF Monitor
Bit 7 - Detector Count Monitor
Bit 8 - Real Time Split Monitor
F = Output Bits 1 thru 4

Row		F
0		
1	RR Overlap A - Phases	
2	RR Overlap B - Phases	
3	RR Overlap C - Phases	
4	RR Overlap D - Phases	
5	Ped 2P	
6	Ped 6P	
7	Ped 4P	
8	Ped 8P	
9	Yellow Flash Phases	
A	Overlap A - Phases	
B	Overlap B - Phases	
C	Overlap C - Phases	
D	Overlap D - Phases	
E	Restricted Phases	
F	Assign 5 Outputs	

Configuration

E + F + ROW

<E Page>

Day of Week

1 = Sunday
2 = Monday
3 = Tuesday
4 = Wednesday
5 = Thursday
6 = Friday
7 = Saturday

Row		E
0	Exclusive Phases	
1	RR-1 Clear Phases	
2	RR-2 Clear Phases	
3	RR-2 Limited Service	
4	Prot / Perm Phases	
5	Overlap A - Green Omit	
6	Overlap B - Green Omit	
7	Overlap C - Green Omit	
8	Overlap D - Green Omit	
9	Overlap Yellow Flash	
A	EV-A Phases	_2_____
B	EV-B Phases	
C	EV-C Phases	_____6__
D	EV-D Phases	_____8
E	Extra 1 Config. Bits	1_345___
F	IC Select (Interconnect)	_2_____

Configuration

For access, set F + 9 + E = 1

E + E + ROW

Extra 1 Flags
1 = TBC Type 1
2 = NEMA Ext. Coord
3 = Auto Daylight Savings
4 = EV Advance
5 = Remote Download
6 = Special Event
7 = Pretimed Operation
8 = Split Ring Operation

IC Select Flags
1 =
2 = Modem
3 = 7-Wire Slave
4 = Flash / Free
5 =
6 = Simplex Master
7 = 7-Wire Master
8 = Offset Interrupter

Assign 5 Outputs
1 = Right Turn Overlap
2 = TOD Outputs
3 = EV Beacon - Steady
4 = EV Beacon - Flashing
5 = Special Event Outputs
6 = Phase 3 & 7 Ped
7 = Advanced Warning Sign
8 =

Time and Date

8-0 Hour, Minute, Day-of-Week
8-1 Day-of-Month, Year, Month
8-F Seconds

Disable Parity	0	D+B+0

Dial-Up Telephone Communications

(If set to a non-zero value, parity will be disabled)

Program Information

C + C + 0 = program
C + C + F = version

Remote Download

C + 0 + 4 = 1 -255
w/ E + E + E bit 5 on

:TERSECTION: LINDA VISTA RD @ MORENA BI

223 Program

Row	1 Delay	3 Carry-over
0		
1		1.8
2		1.8
3		
4		
5		
6		
7		
8		
9		
A		
B		
C		
D		
E	---	---
F	---	---

Detector Name	332 Input File	Detector Number
	1I1	14
	2I2U	1
	2I2L	5
	2I3U	21
	2I3L	25
	2I4	9
	3I5	16
	4I6U	3
	4I6L	7
	4I7U	23
	4I7L	27
	4I8	11
	1I9U	18
	3I9L	20
---	---	---
---	---	---

Row	2 Delay	4 Carry-over
0		
1		1.8
2		1.8
3		
4		
5		
6		
7		1.8
8		
9		
A		
B		
C		
D		
E	---	---
F	---	---

Detector Name	332 Input File	Detector Number
	5J1	13
	6J2U	2
	6J2L	6
	6J3U	22
	6J3L	26
	6J4	10
	7J5	15
	8J6U	4
	8J6L	8
	8J7U	24
	8J7L	28
	8J8	12
	5J9U	17
	7J9L	19
---	---	---
---	---	---

Detector Delay & Carryover <D Page>

D + X (across) + ROW

Row	Detector Numbers	E
A	1 2 3 4 5 6 7 8	12345678
B	9 10 11 12 -- -- -- --	1234____
C	13 14 15 16 17 18 19 20	12345678
D	-- -- -- -- 21 22 23 24	____5678
E	-- -- -- -- -- -- -- --	1234____
F	-- 25 26 27 28 -- -- --	_2345___

Active Detectors <D Page>

Row		0 Detector #
0		
1	System Det. # 1	
2	System Det. # 2	
3	System Det. # 3	
4	System Det. # 4	
5	System Det. # 5	
6	System Det. # 6	
7	System Det. # 7	
8	System Det. # 8	

System Detectors <D Page>

Max ON (min)	5	D+A+E
Max OFF (min)	60	D+A+F

Detector Failure Monitor

Phase Number		F+C+1
Time Before Yellow		F+C+3

Advance Warning Beacon - Sign 1

Phase Number		F+D+1
Time Before Yellow		F+D+3

Advance Warning Beacon - Sign 2

Long Failure	0.5	F+0+6
Short Failure	0.5	F+0+7

Power Cycle Correction (Default = 0.5)

Printed on 4/16/2010 2:46 PM

INTERSECTION: LINDA VISTA RD @ MORENA BL

Coordination Timing By: KH&A
Implemented On: 2/3/2010

Row	Column # --->	Plan 1	2	3	4	5	6	7	8	9
	Plan Name --->		MD/WE			AM	PM			
0	Cycle Length		48			55	68			
1	Phase 1 - ForceOff									
2	Phase 2 - ForceOff		0			0	0			
3	Phase 3 - ForceOff									
4	Phase 4 - ForceOff									
5	Phase 5 - ForceOff									
6	Phase 6 - ForceOff		0			0	0			
7	Phase 7 - ForceOff									
8	Phase 8 - ForceOff		26			29	37			
9	Ring Offset									
A	Offset A		17			5	15			
B	Offset B									
C	Offset C									
D	Permissive		5			6	7			
E	Hold Release		255			255	255			
F	Ped Shift		0			0	0			

Coordination <C Page>
C + Plan + ROW

FOR OBSERVATION ONLY

Master Plan	C + A + 2
Current Plan	C + A + 3
Next Plan	C + A + 4
T.O.D. Plan	C + A + 5
Master Cycle	C + A + 0
Ring A Cycle	C + B + 0
Ring B Cycle	C + D + 0
Min Cycle	C + A + E
Max Cycle	C + B + E

Row	Time	Plan	Offset	Day of Week
0	06 : 30	5	A	_23456_
1	09 : 00	2	A	1____7
2	10 : 30	2	A	_23456_
3	13 : 30	6	A	_23456_
4	18 : 00	2	A	_23456_
5	19 : 00	E	A	1____7
6	20 : 00	E	A	1234567
7	:			
8	:			
9	:			
A	:			
B	:			
C	:			
D	:			
E	:			
F	:			

TOD Coordination
<9 Key with C+0+9=1>

	E
Plan 1	
Plan 2	_2__6__
Plan 3	
Plan 4	
Plan 5	_2__6__
Plan 6	_2__6__
Plan 7	
Plan 8	
Plan 9	
Coord Ped*	
NEMA Hold	

Sync Phases
C + E + FUNCTION #

Row		F
0	Free Lag	_2__6_8
1	Plan 1 - Lag	
2	Plan 2 - Lag	_2__6_8
3	Plan 3 - Lag	
4	Plan 4 - Lag	
5	Plan 5 - Lag	_2__6_8
6	Plan 6 - Lag	_2__6_8
7	Plan 7 - Lag	
8	Plan 8 - Lag	
9	Plan 9 - Lag	
A	Coord Max *	
B	Coord Lag *	
C		
D		
E		
F		

Lag Phases <C Page>
C + F + FUNCTION #

Transition Type	0

TBC Transition
C + D + D

Transition Type
0 = Shortway
Non-zero = Lengthen

Plan Select
1 thru 9 = Coordination Plan 1 thru 9
14 or E = Free
15 or F = Flash

INTERSECTION: LINDA VISTA RD @ NAPA ST

Group Assignment: NONE
Field Master Assignment: NONE

N/S Street Name: NAPA ST
E/W Street Name: LINDA VISTA RD

223 [illegible]gram (2)

Last Database Change:
System Ref. Number: 795

Row	Column # ---->	1	2	3	4	5	6	7	8
		Linda Vista Rd		Napa St	Napa St		Linda Vista Rd		
	Phase # ---->	1	2	3	4	5	6	7	8
0	Ped Walk		5	5	5		5		
1	Ped FDW		22	17	16		11		
2	Min Green	4	7	7	10	4	7		
3	Type 3 Limit								
4	Add/Veh								
5	Veh Extn	2.0	4.3	3.0	2.0	2.0	3.4		
6	Max Gap	2.0	4.3	3.0	2.0	2.0	3.4		
7	Min Gap	2.0	0.2	3.0	2.0	2.0	0.2		
8	Max Limit	30	50	40	40	30	50		
9	Max Limit 2								
A	Bus Adv								
B	Call to Phs								
C	Reduce By		0.1				0.1		
D	Every		0.7				0.9		
E	Yellow	3.4	3.9	3.9	3.9	3.4	4.4		
F	Red Clear	1.0	1.0	1.0	1.0	1.0	1.0		
	Grade								

Phase Timing - Bank 1
F + Phase + Row

<F Page>

	E
RR-1 Delay	
RR-1 Clear	
EV-A Delay	0
EV-A Clear	0
EV-B Delay	0
EV-B Clear	0
EV-C Delay	0
EV-C Clear	0
EV-D Delay	0
EV-D Clear	0
RR-2 Delay	
RR-2 Clear	
View EV Delay	---
View EV Clear	---
View RR Delay	---
View RR Clear	---

Preempt Timing
F + E + Row

Row		F
0	Permit	123456__
1	Red Lock	
2	Yellow Lock	
3	Min Recall	
4	Ped Recall	
5	Peds (View)	_234_6__
6	Rest In Walk	
7	Red Rest	
8	Dbl Entry	
9	Max Recall	
A	Soft Recall	_2___6__
B	Max 2	
C	Cond Serv	
D	Ped Lock	12345678
E	Yellow Start	_2___6__
F	1st Phases	___4____

Phase Functions <F Page>
F + F + Row

Max Initial	0	F + 0 + E
Red Revert	5.0	F + 0 + F
All Red Start	0.0	F + C + O

Start / Revert Times

Drop Number	2	C + 0 + 0
Zone Number	2	C + 0 + 1
Area Number	5	C + 0 + 2
Area Address	79	C + 0 + 3
QuicNet Channel	COM51:	(QuicNet)

Communication Addresses

Overlap Timing

	Row	9 Green Clear	C Yellow Change	D Red Clear	0 Load-Switch #
Overlap A	A				
Overlap B	B				
Overlap C	C				
Overlap D	D				

<F Page>
F + COLOR +

<D Page>
D + 0 + OVERLAP

Manual Plan	0	C + A + 1
Manual Offset	0	C + B + 1

Manual Selection

Manual Plan
0 = Automatic
1-9 = Plan 1-9
14 = Free
15 = Flash

Manual Offset
0 = Automatic
1 = Offset A
2 = Offset B
3 = Offset C

C + F + O

	F	Row
Free Lag	_23__6__	0

Lag Phases <C Page>

Downtime Flash	255 (minutes)

Downtime Before Auto Manual Flash
F + 0 +8

Disable Ports	_234____

Disable Communication Ports
D + D + 9

Timing Sheet By: JS2
Approved By: FLG
Drawing Number: 27197-1-D
Timing Implemented On: 6/1/10

Printed on 4/19/2010 3:36 PM

INTERSECTION: LINDA VISTA RD @ NAPA ST

Row	Time	Function	Day of Week	Column F Phases/Bits
0	00 : 01	E	1234567	1_____
1	:			
2	:			
3	:			
4	:			
5	:			
6	:			
7	:			
8	:			
9	:			
A	:			
B	:			
C	:			
D	:			
E	:			
F	:			

TOD Function

7 + ROW

<D Page>

D + F + ROW

T.O.D. Functions
0 = Permitted Phases
1 = Red Lock
2 = Yellow Lock
3 = Veh Min Recall
4 = Ped Recall
5 =
6 = Rest In Walk
7 = Red Rest
8 = Double Entry
9 = Veh Max Recall
A = Veh Soft Recall
B = Maximum 2
C = Conditional Service
D = Free Lag Phases
E = Bit 1 - Local Override
Bit 2 - Phase Bank 2
Bit 3 - Phase Bank 3
Bit 4 - Disable Detector OFF Monitor
Bit 7 - Detector Count Monitor
Bit 8 - Real Time Split Monitor
F = Output Bits 1 thru 4

Row		F
0		
1	RR Overlap A - Phases	
2	RR Overlap B - Phases	
3	RR Overlap C - Phases	
4	RR Overlap D - Phases	
5	Ped 2P	_2_____
6	Ped 6P	____6__
7	Ped 4P	___4___
8	Ped 8P	__3____
9	Yellow Flash Phases	
A	Overlap A - Phases	
B	Overlap B - Phases	
C	Overlap C - Phases	
D	Overlap D - Phases	
E	Restricted Phases	
F	Assign 5 Outputs	

Configuration

E + F + ROW

<E Page>

Day of Week

1 = Sunday
2 = Monday
3 = Tuesday
4 = Wednesday
5 = Thursday
6 = Friday
7 = Saturday

Assign 5 Outputs
1 = Right Turn Overlap
2 = TOD Outputs
3 = EV Beacon - Steady
4 = EV Beacon - Flashing
5 = Special Event Outputs
6 = Phase 3 & 7 Ped
7 = Advanced Warning Sign
8 =

Row		E
0	Exclusive Phases	
1	RR-1 Clear Phases	
2	RR-2 Clear Phases	
3	RR-2 Limited Service	
4	Prot / Perm Phases	
5	Overlap A - Green Omit	
6	Overlap B - Green Omit	
7	Overlap C - Green Omit	
8	Overlap D - Green Omit	
9	Overlap Yellow Flash	
A	EV-A Phases	_2__5___
B	EV-B Phases	___4___
C	EV-C Phases	1____6__
D	EV-D Phases	__3____
E	Extra 1 Config. Bits	1_345___
F	IC Select (Interconnect)	_2_____

Configuration

For access, set F + 9 + E = 1

E + E + ROW

Extra 1 Flags
1 = TBC Type 1
2 = NEMA Ext. Coord
3 = Auto Daylight Savings
4 = EV Advance
5 = Remote Download
6 = Special Event
7 = Pretimed Operation
8 = Split Ring Operation

IC Select Flags
1 =
2 = Modem
3 = 7-Wire Slave
4 = Flash / Free
5 =
6 = Simplex Master
7 = 7-Wire Master
8 = Offset Interrupter

Time and Date

8-0 Hour, Minute, Day-of-Week
8-1 Day-of-Month, Year, Month
8-F Seconds

Disable Parity	0	D+B+0

Dial-Up Telephone Communications
(If set to a non-zero value, parity will be disabled)

Program Information

C + C + 0 = program
C + C + F = version

Remote Download

C + 0 + 4 = 1 -255
w/ E + E + E bit 5 on

TERSECTION: LINDA VISTA RD @ NAPA ST

223 Program

Row	1 Delay	3 Carry-over
0	2.0	
1		1.8
2		
3		
4		
5		
6		
7		
8		
9		
A		
B		
C		
D		
E	---	---
F	---	---

Detector Name	332 Input File	Detector Number
	1I1	14
	2I2U	1
	2I2L	5
	2I3U	21
	2I3L	25
	2I4	9
	3I5	16
	4I6U	3
	4I6L	7
	4I7U	23
	4I7L	27
	4I8	11
	1I9U	18
	3I9L	20
---	---	---
---	---	---

Row	2 Delay	4 Carry-over
0		
1		1.8
2		1.8
3		
4		
5		
6		
7		
8		
9		
A		
B		
C		
D		
E	---	---
F	---	---

Detector Name	332 Input File	Detector Number
	5J1	13
	6J2U	2
	6J2L	6
	6J3U	22
	6J3L	26
	6J4	10
	7J5	15
	8J6U	4
	8J6L	8
	8J7U	24
	8J7L	28
	8J8	12
	5J9U	17
	7J9L	19
---	---	---
---	---	---

Detector Delay & Carryover <D Page>

D + X (across) + ROW

Row	Detector Numbers	E
A	1 2 3 4 5 6 7 8	12345678
B	9 10 11 12 -- -- -- --	1234____
C	13 14 15 16 17 18 19 20	12345678
D	-- -- -- -- 21 22 23 24	____5678
E	-- -- -- -- -- -- -- --	1234____
F	-- 25 26 27 28 -- -- --	_2345___

Active Detectors <D Page>

Row		0 Detector #
0		
1	System Det. # 1	
2	System Det. # 2	
3	System Det. # 3	
4	System Det. # 4	
5	System Det. # 5	
6	System Det. # 6	
7	System Det. # 7	
8	System Det. # 8	

System Detectors <D Page>

Max ON (min)	5	D+A+E
Max OFF (min)	60	D+A+F

Detector Failure Monitor

Phase Number		F+C+1
Time Before Yellow		F+C+3

Advance Warning Beacon - Sign 1

Phase Number		F+D+1
Time Before Yellow		F+D+3

Advance Warning Beacon - Sign 2

Long Failure	0.5	F+0+6
Short Failure	0.5	F+0+7

Power Cycle Correction (Default = 0.5)

INTERSECTION: LINDA VISTA RD @ NAPA ST

Coordination Timing By: KH&A
Implemented On: 2/3/2010

Row	Column # --->	Plan 1	2	3	4	5	6	7	8	9
	Plan Name --->		MD/WE			AM	PM			
0	Cycle Length		96			110	136			
1	Phase 1 - ForceOff		68			79	98			
2	Phase 2 - ForceOff		0			0	0			
3	Phase 3 - ForceOff		49			66	29			
4	Phase 4 - ForceOff		29			38	70			
5	Phase 5 - ForceOff		63			79	82			
6	Phase 6 - ForceOff		0			0	0			
7	Phase 7 - ForceOff									
8	Phase 8 - ForceOff									
9	Ring Offset									
A	Offset A		3			37	47			
B	Offset B									
C	Offset C									
D	Permissive		10			11	14			
E	Hold Release		255			255	255			
F	Ped Shift		0			0	0			

Coordination <C Page>
C + Plan + ROW

FOR OBSERVATION ONLY

Master Plan	C + A + 2
Current Plan	C + A + 3
Next Plan	C + A + 4
T.O.D. Plan	C + A + 5
Master Cycle	C + A + 0
Ring A Cycle	C + B + 0
Ring B Cycle	C + D + 0
Min Cycle	C + A + E
Max Cycle	C + B + E

Row	Time	Plan	Offset	Day of Week
0	06 : 30	5	A	_23456_
1	09 : 00	2	A	1____7
2	10 : 30	2	A	_23456_
3	13 : 30	6	A	_23456_
4	18 : 00	2	A	_23456_
5	19 : 00	E	A	1____7
6	20 : 00	E	A	1234567
7	:			
8	:			
9	:			
A	:			
B	:			
C	:			
D	:			
E	:			
F	:			

TOD Coordination
<9 Key with C+0+9=1>

	E
Plan 1	
Plan 2	_2__6__
Plan 3	
Plan 4	
Plan 5	_2__6__
Plan 6	_2__6__
Plan 7	
Plan 8	
Plan 9	
Coord Ped*	
NEMA Hold	

Sync Phases
C + E + FUNCTION #

Row		F
0	Free Lag	_23__6__
1	Plan 1 - Lag	
2	Plan 2 - Lag	_23__6__
3	Plan 3 - Lag	
4	Plan 4 - Lag	
5	Plan 5 - Lag	_23__6__
6	Plan 6 - Lag	_2_4_6__
7	Plan 7 - Lag	
8	Plan 8 - Lag	
9	Plan 9 - Lag	
A	Coord Max *	___4____
B	Coord Lag *	
C		
D		
E		
F		

Lag Phases <C Page>
C + F + FUNCTION #

Transition Type	0

TBC Transition
C + D + D

Transition Type
0 = Shortway
Non-zero = Lengthen

Plan Select
1 thru 9 = Coordination Plan 1 thru 9
14 or E = Free
15 or F = Flash

INTERSECTION: MORENA BLVD @ NAPA ST/SHERMAN S

Group Assignment:
Field Master Assignment:

N/S Street Name: MORENA
E/W Street Name: NAPA/SHERMAN

223 Pro m

Row	Column # ----> / Phase # ---->	MORENA 1 (1+8)	2	3	4	MORENA 5	6	7	NAPA/SHERMAN 8
0	Ped Walk		7						
1	Ped FDW		13				7		7
2	Min Green	4	10				22		19
3	Type 3 Limit					4	10		7
4	Add/Veh								
5	Veh Extn	2.0	3.7						
6	Max Gap	2.0	3.7			2.0	2.6		2.0
7	Min Gap	2.0	0.2			2.0	2.6		2.0
8	Max Limit	30	60			2.0	0.2		2.0
9	Max Limit 2	40				30	60		40
A	Bus Adv								
B	Call to Phs								
C	Reduce By		0.1						
D	Every		0.9				0.1		
E	Yellow	3.4	4.1				1.2		
F	Red Clear	1.0	1.0			3.4	4.3		3.9
						1.0	1.0		1.0

Phase Timing - Bank 1
F + Phase + Row

<F Page>

	E
RR-1 Delay	
RR-1 Clear	
EV-A Delay	0
EV-A Clear	0
EV-B Delay	
EV-B Clear	
EV-C Delay	0
EV-C Clear	0
EV-D Delay	
EV-D Clear	
RR-2 Delay	
RR-2 Clear	
View EV Delay	---
View EV Clear	---
View RR Delay	---
View RR Clear	---

F + E + Row

Row		F
0	Permit	12__56_8
1	Red Lock	
2	Yellow Lock	
3	Min Recall	_2___6__
4	Ped Recall	
5	Peds (View)	_2___6_8
6	Rest In Walk	
7	Red Rest	
8	Dbl Entry	
9	Max Recall	
A	Soft Recall	
B	Max 2	
C	Cond Serv	
D	Ped Lock	12345678
E	Yellow Start	_2___6__
F	1st Phases	_____8

F + F + Row

Max Initial	0	F + 0 + E
Red Revert	5.0	F + 0 + F
All Red Start	0.0	F + C + O

Start / Revert Times

Drop Number	13	C + 0 + 0
Zone Number	13	C + 0 + 1
Area Number	5	C + 0 + 2
Area Address	108	C + 0 + 3
QuicNet Channel	COM 52	(QuicNet)

Communication Addresses

Overlap Timing

	Row	9 Green Clear	C Yellow Change	D Red Clear	0 Load-Switch #
Overlap A	A				
Overlap B	B				
Overlap C	C				
Overlap D	D				

<F Page>
F + COLOR +

<D Page>
D + 0 + OVERLAP

Manual Plan	0	C + A + 1
Manual Offset	0	C + B + 1

Manual Selection

Manual Plan
0 = Automatic
1-9 = Plan 1-9
14 = Free
15 = Flash

Manual Offset
0 = Automatic
1 = Offset A
2 = Offset B
3 = Offset C

C + F + O

	F	Row
Free Lag	1___6_8	0

Lag Phases <C Page>

Downtime Flash	255 (minutes)

Downtime Before Auto Manual Flash
F + 0 + 8

Disable Ports	_234___

Disable Communication Ports
D + D + 9

Timing Sheet By: M2S
Approved By: FLG
Drawing Number: 25887-7-D
Timing Implemented On: 04/14/10

Printed on 4/8/2010 11:12 AM

INTERSECTION: MORENA BLVD @ NAPA STREET

Row	Time	Function	Day of Week	Column F Phases/Bits
0	12 : 30	B	_23456_	1_____
1	18 : 30	B	_23456_	
2	00 : 01	E	1234567	1_____
3				
4				
5				
6				
7				
8				
9				
A				
B				
C				
D				
E				
F				

TOD Function

7 + ROW

<D Page>

D + F + ROW

T.O.D. Functions
0 = Permitted Phases
1 = Red Lock
2 = Yellow Lock
3 = Veh Min Recall
4 = Ped Recall
5 =
6 = Rest In Walk
7 = Red Rest
8 = Double Entry
9 = Veh Max Recall
A = Veh Soft Recall
B = Maximum 2
C = Conditional Service
D = Free Lag Phases
E = Bit 1 - Local Override
Bit 2 - Phase Bank 2
Bit 3 - Phase Bank 3
Bit 4 - Disable Detector OFF Monitor
Bit 7 - Detector Count Monitor
Bit 8 - Real Time Split Monitor
F = Output Bits 1 thru 4

Row		F
0		
1	RR Overlap A - Phases	
2	RR Overlap B - Phases	
3	RR Overlap C - Phases	
4	RR Overlap D - Phases	
5	Ped 2P	_2_____
6	Ped 6P	_____6__
7	Ped 4P	
8	Ped 8P	_____8
9	Yellow Flash Phases	
A	Overlap A - Phases	1_____8
B	Overlap B - Phases	
C	Overlap C - Phases	
D	Overlap D - Phases	
E	Restricted Phases	
F	Assign 5 Outputs	1_____

Configuration

E + F + ROW

<E Page>

Day of Week

1 = Sunday
2 = Monday
3 = Tuesday
4 = Wednesday
5 = Thursday
6 = Friday
7 = Saturday

Assign 5 Outputs
1 = Right Turn Overlap
2 = TOD Outputs
3 = EV Beacon - Steady
4 = EV Beacon - Flashing
5 = Special Event Outputs
6 = Phase 3 & 7 Ped
7 = Advanced Warning Sign
8 = Bus Advance

Row		E
0	Exclusive Phases	
1	RR-1 Clear Phases	
2	RR-2 Clear Phases	
3	RR-2 Limited Service	
4	Prot / Perm Phases	
5	Overlap A - Green Omit	_____8
6	Overlap B - Green Omit	
7	Overlap C - Green Omit	
8	Overlap D - Green Omit	
9	Overlap Yellow Flash	
A	EV-A Phases	_2__5___
B	EV-B Phases	
C	EV-C Phases	1____6__
D	EV-D Phases	
E	Extra 1 Config. Bits	1_345___
F	IC Select (Interconnect)	_2_____

Configuration

For access, set F + 9 + E = 1

E + E + ROW

Extra 1 Flags
1 = TBC Type 1
2 = NEMA Ext. Coord
3 = Auto Daylight Savings
4 = EV Advance
5 = Remote Download
6 = Special Event
7 = Pretimed Operation
8 = Split Ring Operation

IC Select Flags
1 =
2 = Modem
3 = 7-Wire Slave
4 = Flash / Free
5 =
6 = Simplex Master
7 = 7-Wire Master
8 = Offset Interrupter

Time and Date

8-0 Hour, Minute, Day-of-Week
8-1 Day-of-Month, Year, Month
8-F Seconds

Disable Parity	0	D+B+0

Dial-Up Telephone Communications
(If set to a non-zero value, parity will be disabled)

Program Information

C + C + 0 = program
C + C + F = version

Remote Download

C + 0 + 4 = 1 -255
w/ E + E + E bit 5 on

Row	1 Delay	3 Carry-over	Detector Name	332 Input File	Detector Number
0				1I1	14
1		1.8		2I2U	1
2				2I2L	5
3				2I3U	21
4				2I3L	25
5				2I4	9
6				3I5	16
7				4I6U	3
8				4I6L	7
9				4I7U	23
A				4I7L	27
B				4I8	11
C				1I9U	18
D				3I9L	20
E	---	---	---	---	---
F	---	---	---	---	---

Row	2 Delay	4 Carry-over	Detector Name	332 Input File	Detector Number
0				5J1	13
1		1.8		6J2U	2
2				6J2L	6
3				6J3U	22
4				6J3L	26
5				6J4	10
6				7J5	15
7	10.0			8J6U	4
8				8J6L	8
9	10.0			8J7U	24
A				8J7L	28
B				8J8	12
C				5J9U	17
D				7J9L	19
E	---	---	---	---	---
F	---	---	---	---	---

Detector Delay & Carryover <D Page>

D + X (across) + ROW

Row	Detector Numbers	E
A	1 2 3 4 5 6 7 8	12345678
B	9 10 11 12 -- -- -- --	1234____
C	13 14 15 16 17 18 19 20	12345678
D	-- -- -- -- 21 22 23 24	____5678
E	-- -- -- -- -- -- -- --	1234____
F	-- 25 26 27 28 -- -- --	_2345___

Active Detectors <D Page>

Row		0 Detector #
0		
1	System Det. # 1	
2	System Det. # 2	
3	System Det. # 3	
4	System Det. # 4	
5	System Det. # 5	
6	System Det. # 6	
7	System Det. # 7	
8	System Det. # 8	

System Detectors <D Page>

Max ON (min)	5	D+A+E
Max OFF (min)	60	D+A+F

Detector Failure Monitor

Phase Number		F+C+1
Time Before Yellow		F+C+3

Advance Warning Beacon - Sign 1

Phase Number		F+D+1
Time Before Yellow		F+D+3

Advance Warning Beacon - Sign 2

Long Failure	0.5	F+0+6
Short Failure	0.5	F+0+7

Power Cycle Correction (Default = 0.5)

INTERSECTION: MORENA BLVD @ NAPA STREET/FRANKLIN ST.

Coordination Timing By: KH&A
Implemented On: 1/26/2010

Row	Column # —>	Plan 1	2	3	4	5	6	7	8	9
	Plan Name —>		Mid & Weekend			AM	PM			
0	Cycle Length		96			110	136			
1	Phase 1 - ForceOff		52			43	0			
2	Phase 2 - ForceOff		0			0	70			
3	Phase 3 - ForceOff									
4	Phase 4 - ForceOff									
5	Phase 5 - ForceOff		88			98	58			
6	Phase 6 - ForceOff		0			0	0			
7	Phase 7 - ForceOff									
8	Phase 8 - ForceOff		75			74	35			
9	Ring Offset									
A	Offset A		77			32	6			
B	Offset B									
C	Offset C									
D	Permissive		10			11	14			
E	Hold Release		255			255	255			
F	Ped Shift		0			0	0			

Coordination <C Page>

C + Plan + ROW

FOR OBSERVATION ONLY

Master Plan	C + A + 2
Current Plan	C + A + 3
Next Plan	C + A + 4
T.O.D. Plan	C + A + 5
Master Cycle	C + A + 0
Ring A Cycle	C + B + 0
Ring B Cycle	C + D + 0
Min Cycle	C + A + E
Max Cycle	C + B + E

Row	Time	Plan	Offset	Day of Week
0	06 : 30	5	A	_23456_
1	09 : 00	2	A	1_____7
2	10 : 30	2	A	_23456_
3	13 : 30	6	A	_23456_
4	18 : 00	2	A	_23456_
5	19 : 00	E	A	1_____7
6	20 : 00	E	A	1234567
7				
8				
9				
A				
B				
C				
D				
E				
F				

TOD Coordination

<9 Key with C+0+9=1>

	E
Plan 1	
Plan 2	_2___6__
Plan 3	
Plan 4	
Plan 5	_2___6__
Plan 6	1____6__
Plan 7	
Plan 8	
Plan 9	
Coord Ped*	
NEMA Hold	

Sync Phases

C + E + FUNCTION #

Row		F
0	Free Lag	
1	Plan 1 - Lag	
2	Plan 2 - Lag	1____6_8
3	Plan 3 - Lag	
4	Plan 4 - Lag	
5	Plan 5 - Lag	1____6_8
6	Plan 6 - Lag	1____6_8
7	Plan 7 - Lag	
8	Plan 8 - Lag	
9	Plan 9 - Lag	
A	Coord Max *	_2_____
B	Coord Lag *	
C		
D		
E		
F		

Lag Phases <C Page>

C + F + FUNCTION #

Transition Type	0

TBC Transition
C + D + D

Plan Select
1 thru 9 = Coordination Plan 1 thru 9
14 or E = Free
15 or F = Flash

Transition Type
0 = Shortway
Non-zero = Lengthen

TRAFFIC SIGNAL TIMING

PROGR.
200

PHASE TIMING

TECOLOTE RD, MORENA BL

INTERVAL		1	2	3	4	5	6	7	8
WALK	0	7	7	7					
FLASH D/W	1	11	17	20					
MIN GREEN	2	8	7	8	10				
TYPE 3 DET	3								
ADD/VEH	4	2	2						
VEH EXTEN *	5	~~3.0~~ 3.0	4.8	3.0	3.0				
MAX GAP *	6	~~4.8~~ 3.0	4.8	3.0	3.0				
MIN GAP *	7	~~2~~ 3.0	2	3.0	3.0				
MAX EXTEN	8	30	45	45	45				
MAX 2	9	~~30~~	~~45~~	~~45~~	~~45~~				
	A								
CALLTO PHASE	B								
REDUCE BY	C	~~0.1~~	0.1						
REDUCE EVERY	D	~~1.1~~	1.1						
YELLOW	E	~~3.0~~ 3.0	~~3.57~~ 3.0	~~3.0~~ 4.1	~~3.0~~ 4.1				
RED CLEAR	F	1	1	1	1				

PREEMPT

RR1 DELAY		0
RR1 CLEAR		1
EVA DELAY		2
EVA CLEAR		3
EVB DELAY		4
EVB CLEAR		5
EVC DELAY		6
EVC CLEAR		7
EVD DELAY		8
EVD CLEAR		9
RR2 DELAY		A
RR2 CLEAR		B
EV CLR TMR		C
EV DLY TMR		D
RR CLR TMR		E
RR DLY TMR		F

MAX INITIAL (F-0-E) = 24 KEYSTROKES: F + PHASE + LOCATION

RED REVERT (F-0-F) = 5

ALL RED START (F-C-0) = 0

* MUST BE SAME FOR NON-DENSITY OPERATION

PHASE FUNCTION FLAGS

KEYSTROKES: F+F+FUNCTION#

FUNCTION		PHASE 1	2	3	4	5	6	7	8
PERMIT	0	X	X	X	X				
RED LOCK	1								
YELLOW LOCK	2	X	X	X	X				
VEH RECALL	3								
PED RECALL	4								
PEDS	5								
REST IN WALK	6								
RED REST	7								
DOUBLE ENTRY	8								
MAX RECALL	9								
SOFT RECALL	A		X						
MAX 2	B								
COND SERVE	C								
RESERVED	D								
STARTUP	E		X						
FIRST PHASES	F			X	X				

C00 - 3
C01 - 3
C02 - 5
C03 - 86
Com 52

OVERLAP TIMING

KEYSTROKE: F+ COLOR CODE+OVERLAP

	9 GREEN	C YELLO	D RED
OVERLAP A			
OVERLAP B			
OVERLAP C			
OVERLAP D			

PHASE SEQUENCES (CFO)

	PHASE 1	2	3	4	5	6	7	8
LAG 0 (FREE)		X	X	X				

FLG
2-29-96

Ø2 GREEN AT MORENA BL & TECOLOTE RD CONNECTED TO Ø2 & Ø6 GREEN AT KNOXVILLE ST & MORENA BL THROUGH EV RELAY

LOC: MORENA BL & TECOLOTE RD

DATE: 5/20/93

DETECTOR TIMES (332 CABINET)

► SET DELAY SET CARRY OBS COUNT OBS DELAY OBS CARRY

	1	2	3	4	5	6	7	8	9	A
0	111	5J1	111	5J1	111	5J1	111	5J1	111	5J1
1	212U	6J2U	212U	6J2U	212U	6J2U	212U	6J2U	212U	6J2U
2	212L	6J2L	212L	6J2L	212L	6J2L	212L	6J2L	212L	6J2L
3	213U	6J3U	213U	6J3U	213U	6J3U	213U	6J3U	213U	6J3U
4	213L	6J3L	213L	6J3L			213L	6J3L	213L	6J3L
5	214	6J4	214	6J4			214	6J4	214	6J4
6	315	7J5	315	7J5	315	7J5	315	7J5	315	7J5
7	416U	8J6U	416U	8J6U	416U	8J6U	416U	8J6U	416U	8J6U
8	416L	8J6L	416L	8J6L	416L	8J6L	416L	8J6L	416L	8J6L
9	417U	8J7U	417U	8J7U	417U	8J7U	417U	8J7U	417U	8J7U
A	417L	8J7L	417L	8J7L			417L	8J7L	417L	8J7L
B	418	8J8	418	8J8			418	8J8	418	8J8
C	119U	5J9U	119U	5J9U	119U	5J9U	119U	5J9U	119U	5J9U
D	319L	7J9L	319L	7J9L	319L	7J9L	319L	7J9L	319L	7J9L
E										
F										

KEYSTROKES: D + X + Y

TIME OF DAY FEATURES

EVENT

	TIME	FUNCT	DAY OF WEEK S	M	T	W	T	F	S
0	0001	E	X	X	X	X	X	X	X
1									
2									
3									
4									
5									
6									
7									
8									
9									
A									
B									
C									
D									
E									
F									

KEYSTROKES: 7+EVENT#

FUNCTION BY PHASE

	1	2	3	4	5	6	7	8
	X							

KEYSTROKES: D-F-EVENT #

TIME OF DAY LOCAL FUNCTION CODES

0 - PERMIT	7 - RED REST	E - 1 - LOCAL OVERIDE	F - TOD OUTPUTS
1 - RED LOCK	8 - DBL ENTRY	2 - PHASE BANK 2	1 - TOD OUT 1
2 - YELLOW OCK	9 - VEH MAX RCL	3 - PHASE BANK 3	2 - TOD OUT 2
3 - VEH RECALL	A - SOFT RECALL	7 - DET COUNT	3 - TOD OUT 3
4 - PED RECALL	B - MAX II EXT	8 - SPLIT MONITOR	4 - TOD OUT 4
5 - RESERVED	C - COND SERVE		
6 - REST IN WALK	D - TOD LAG Ø		

CURRENT TIME AND DATE

B-0 HOUR, MINUTE, DAY OF WEEK

B-1 DAY OF MONTH, YEAR, MONTH

B+F SECONDS

CONFIGURATION DATA

NOTE. "E" KEY ENABLED (F-9-E ≠ 0)

KEYSTROKES: E+E+INTERVAL

INTERVAL

		PHASE 1	2	3	4	5	6	7	8
0	EXCLU PH								
1	RR1 GRN CL								
2	RR2 GRN CL								
3	RR2 LTD								
4									
5	OLA GOMIT		X						
6	OLB GOMIT								
7	OLC GOMIT								
8	OLD GOMIT								
9	OV FL VEL								
A	EMVEH A								
B	EMVEH B				X				
C	EMVEH C								
D	EMVEH D			X					
E	EXTRA	X		X	X	X			
F	IC SELECT	X	X						

EXTRA. (E+E+E)
- 1-TBC TYPE 1
- 2-NEMA COOD
- 3-DAYLIGHT SAV
- 4-EV ADVANCE
- 6-SPECIAL EVENT
- 7-PRETIMED
- 8-SPLIT RING

ICSEL: (E+E+F)
- 1- SIMPLEX IN
- 2-2-WAY MODEM
- 3-7 WIRE IN
- 4-FLH/FREE
- 5-SIMPLEX OUT
- 7-7 WIRE OUT

ASSIGNS (E+F+F)
- 1-RT OVERLAP
- 2-TOD OUTPUTS
- 3-STEADY EV BEAC
- 4-FLASH EV BEAC

KEYSTROKES: E+F+INTERVAL

INTERVAL

		PHASE 1	2	3	4	5	6	7	8
0									
1	RR OLAP A								
2	RR OLAP B								
3	RR OLAP C								
4	RR OLAP D								
5	PED2P		X						
6	PED6P	X							
7	PED4P			X					
8	PED8P								
9	FLH YELO								
A	OVERLAP A		X	X					
B	OVERLAP B								
C	OVERLAP C								
D	OVERLAP D								
E	RESTRICT								
F	ASSIGNS	X							

INTERSECTION: Morena Bl & W. Morena Bl (south)

223 Program

Group Assignment:
Field Master Assignment:

N/S Street Name: MORENA BL
E/W Street Name: W. MORENA BL

Last Database Change:
System Ref. Number:

N

Row	Column # ---> / Phase # --->	1	2 (Morena)	3	4 (Morena)	5	6 (W. Morena)	7	8
0	Ped Walk								
1	Ped FDW								
2	Min Green		10		10		10		
3	Type 3 Limit								
4	Add/Veh		2.0		2.0		2.0		
5	Veh Extn		3.8		8.0		3.8		
6	Max Gap		3.8		8.0		3.8		
7	Min Gap		2.0		2.5		2.0		
8	Max Limit		60		60		60		
9	Max Limit 2								
A	Bus Adv								
B	Call to Phs								
C	Reduce By		0.1		0.1		0.1		
D	Every		1.7		0.5		1.7		
E	Yellow		4.0		3.9		4.8		
F	Red Clear		1.0		1.0		1.0		

Phase Timing - Bank 1
F + Phase + Row

<F Page>

	E
RR-1 Delay	
RR-1 Clear	
EV-A Delay	0
EV-A Clear	0
EV-B Delay	
EV-B Clear	
EV-C Delay	0
EV-C Clear	0
EV-D Delay	
EV-D Clear	
RR-2 Delay	
RR-2 Clear	
View EV Delay	---
View EV Clear	---
View RR Delay	---
View RR Clear	---

Preempt Timing
F + E + Row

Row		F
0	Permit	_2_4_6__
1	Red Lock	
2	Yellow Lock	_2_4_6__
3	Min Recall	_2___6__
4	Ped Recall	
5	Peds (View)	
6	Rest In Walk	
7	Red Rest	
8	Dbl Entry	_2___6__
9	Max Recall	
A	Soft Recall	
B	Max 2	
C	Cond Serv	
D	Ped Lock	12345678
E	Yellow Start	_2___6__
F	1st Phases	___4____

Phase Functions <F Page>
F + F + Row

Max Initial	32	F + 0 + E
Red Revert	5.0	F + 0 + F
All Red Start	0.0	F + C + O

Start / Revert Times

Drop Number	12	C + 0 + 0
Zone Number	12	C + 0 + 1
Area Number	5	C + 0 + 2
Area Address	103	C + 0 + 3
QuicNet Channel	COM52:	(QuicNet)

Communication Addresses

Overlap Timing

	Row	9 Green Clear	C Yellow Change	D Red Clear	0 Load-Switch #
Overlap A	A				
Overlap B	B				
Overlap C	C				
Overlap D	D				

<F Page>
F + COLOR +

<D Page>
D + 0 + OVERLAP

Manual Plan	0	C + A + 1
Manual Offset	0	C + B + 1

Manual Selection

Manual Plan
0 = Automatic
1-9 = Plan 1-9
14 = Free
15 = Flash

Manual Offset
0 = Automatic
1 = Offset A
2 = Offset B
3 = Offset C

C + F + O	F	Row
Free Lag	_2_4_6__	0

Lag Phases <C Page>

Downtime Flash	255	(minutes)

Downtime Before Auto Manual Flash
F + 0 +8

Disable Ports	234

Disable Communication Ports
D + D + 9

Timing Sheet By: LEM
Approved By: FLG
Drawing Number: 22121-5-D
Timing Implemented On: 4/21/10

(5)

Row	Time	Function	Day of Week	Column F Phases/Bits
0	00 : 01	E	1234567	1_____
1				
2				
3				
4				
5				
6				
7				
8				
9				
A				
B				
C				
D				
E				
F				

TOD Function

7 + ROW

<D Page>

D + F + ROW

T.O.D. Functions
0 = Permitted Phases
1 = Red Lock
2 = Yellow Lock
3 = Veh Min Recall
4 = Ped Recall
5 =
6 = Rest In Walk
7 = Red Rest
8 = Double Entry
9 = Veh Max Recall
A = Veh Soft Recall
B = Maximum 2
C = Conditional Service
D = Free Lag Phases
E = Bit 1 - Local Override
Bit 2 - Phase Bank 2
Bit 3 - Phase Bank 3
Bit 4 - Disable Detector OFF Monitor
Bit 7 - Detector Count Monitor
Bit 8 - Real Time Split Monitor
F = Output Bits 1 thru 4

Row		F
0		
1	RR Overlap A - Phases	
2	RR Overlap B - Phases	
3	RR Overlap C - Phases	
4	RR Overlap D - Phases	
5	Ped 2P	
6	Ped 6P	
7	Ped 4P	
8	Ped 8P	
9	Yellow Flash Phases	
A	Overlap A - Phases	
B	Overlap B - Phases	
C	Overlap C - Phases	
D	Overlap D - Phases	
E	Restricted Phases	
F	Assign 5 Outputs	

Configuration

E + F + ROW

<E Page>

Day of Week

1 = Sunday
2 = Monday
3 = Tuesday
4 = Wednesday
5 = Thursday
6 = Friday
7 = Saturday

Assign 5 Outputs
1 = Right Turn Overlap
2 = TOD Outputs
3 = EV Beacon - Steady
4 = EV Beacon - Flashing
5 = Special Event Outputs
6 = Phase 3 & 7 Ped
7 = Advanced Warning Sign
8 =

Row		E
0	Exclusive Phases	
1	RR-1 Clear Phases	
2	RR-2 Clear Phases	
3	RR-2 Limited Service	
4	Prot / Perm Phases	
5	Overlap A - Green Omit	
6	Overlap B - Green Omit	
7	Overlap C - Green Omit	
8	Overlap D - Green Omit	
9	Overlap Yellow Flash	
A	EV-A Phases	_2___6__
B	EV-B Phases	
C	EV-C Phases	___4____
D	EV-D Phases	
E	Extra 1 Config. Bits	1_345___
F	IC Select (Interconnect)	_2_____

Configuration

E + E + ROW

For access, set F + 9 + E = 1

Extra 1 Flags
1 = TBC Type 1
2 = NEMA Ext. Coord
3 = Auto Daylight Savings
4 = EV Advance
5 = Remote Download
6 = Special Event
7 = Pretimed Operation
8 = Split Ring Operation

IC Select Flags
1 =
2 = Modem
3 = 7-Wire Slave
4 = Flash / Free
5 =
6 = Simplex Master
7 = 7-Wire Master
8 = Offset Interrupter

Time and Date

8-0 Hour, Minute, Day-of-Week
8-1 Day-of-Month, Year, Month
8-F Seconds

Disable Parity	0	D+B+0

Dial-Up Telephone Communications

(If set to a non-zero value, parity will be disabled)

Program Information

C + C + 0 = program
C + C + F = version

Remote Download

C + 0 + 4 = 1 -255
w/ E + E + E bit 5 on

INTERSECTION: Morena Bl & W. Morena Bl (south) — 223 Program

Row	1 Delay	3 Carry-over
0		
1		
2		
3		
4		
5		
6		
7		
8		
9		
A		
B		
C		
D		
E	---	---
F	---	---

Detector Name	332 Input File	Detector Number
	1I1	14
	2I2U	1
	2I2L	5
	2I3U	21
	2I3L	25
	2I4	9
	3I5	16
	4I6U	3
	4I6L	7
	4I7U	23
	4I7L	27
	4I8	11
	1I9U	18
	3I9L	20
---	---	---
---	---	---

Row	2 Delay	4 Carry-over
0		
1		
2		
3		
4		
5		
6		
7		
8		
9		
A		
B		
C		
D		
E	---	---
F	---	---

Detector Name	332 Input File	Detector Number
	5J1	13
	6J2U	2
	6J2L	6
	6J3U	22
	6J3L	26
	6J4	10
	7J5	15
	8J6U	4
	8J6L	8
	8J7U	24
	8J7L	28
	8J8	12
	5J9U	17
	7J9L	19
---	---	---
---	---	---

Detector Delay & Carryover <D Page>

D + X (across) + ROW

Row	Detector Numbers	E
A	1 2 3 4 5 6 7 8	12345678
B	9 10 11 12 -- -- -- --	1234____
C	13 14 15 16 17 18 19 20	12345678
D	-- -- -- -- 21 22 23 24	____5678
E	-- -- -- -- -- -- -- --	1234____
F	-- 25 26 27 28 -- -- --	_2345___

Active Detectors <D Page>

Row		0 Detector #
0		
1	System Det. # 1	0
2	System Det. # 2	0
3	System Det. # 3	0
4	System Det. # 4	0
5	System Det. # 5	0
6	System Det. # 6	0
7	System Det. # 7	0
8	System Det. # 8	0

System Detectors <D Page>

Max ON (min)	5	D+A+E
Max OFF (min)	60	D+A+F

Detector Failure Monitor

Phase Number	0	F+C+1
Time Before Yellow	0.0	F+C+3

Advance Warning Beacon - Sign 1

Phase Number	0	F+D+1
Time Before Yellow	0.0	F+D+3

Advance Warning Beacon - Sign 2

Long Failure	0.5	F+0+6
Short Failure	0.5	F+0+7

Power Cycle Correction (Default = 0.5)

INTERSECTION: Morena Bl & W. Morena Bl (south)

223 Program

Coordination Timing By: G
Implemented On: 10/27/2009

Row	Column # --->	Plan 1	2	3	4	5	6	7	8	9
	Plan Name --->		Mid & Weekend			AM	PM			
0	Cycle Length		48			55	68			
1	Phase 1 - ForceOff									
2	Phase 2 - ForceOff		0			0	0			
3	Phase 3 - ForceOff									
4	Phase 4 - ForceOff		22			22	23			
5	Phase 5 - ForceOff									
6	Phase 6 - ForceOff		0			0	0			
7	Phase 7 - ForceOff									
8	Phase 8 - ForceOff									
9	Ring Offset									
A	Offset A		28			41	1			
B	Offset B									
C	Offset C									
D	Permissive		5			6	7			
E	Hold Release		255			255	255			
F	Ped Shift		0			0	0			

Coordination <C Page>

C + Plan + ROW

FOR OBSERVATION ONLY

Master Plan	C + A + 2
Current Plan	C + A + 3
Next Plan	C + A + 4
T.O.D. Plan	C + A + 5
Master Cycle	C + A + 0
Ring A Cycle	C + B + 0
Ring B Cycle	C + D + 0
Min Cycle	C + A + E
Max Cycle	C + B + E

Row	Time	Plan	Offset	Day of Week
0	06 : 30	5	A	_23456_
1	09 : 00	2	A	1_____7
2	10 : 30	2	A	_23456_
3	13 : 30	6	A	_23456_
4	18 : 00	2	A	_23456_
5	19 : 00	E	A	1_____7
6	20 : 00	E	A	1234567
7				
8				
9				
A				
B				
C				
D				
E				
F				

TOD Coordination

<9 Key with C+0+9=1>

	E	Row		F
		0	Free Lag	_2_4_6__
Plan 1		1	Plan 1 - Lag	
Plan 2	_2___6__	2	Plan 2 - Lag	_2_4_6__
Plan 3		3	Plan 3 - Lag	
Plan 4		4	Plan 4 - Lag	
Plan 5	_2___6__	5	Plan 5 - Lag	_2_4_6__
Plan 6	_2___6__	6	Plan 6 - Lag	_2_4_6__
Plan 7		7	Plan 7 - Lag	
Plan 8		8	Plan 8 - Lag	
Plan 9		9	Plan 9 - Lag	
Coord Ped*		A	Coord Max *	
NEMA Hold		B	Coord Lag *	
		C		
		D		
		E		
		F		

Sync Phases

C + E + FUNCTION #

Lag Phases <C Page>

C + F + FUNCTION #

Transition Type	0

TBC Transition
C + D + D

Plan Select
1 thru 9 = Coordination Plan 1 thru 9
14 or E = Free
15 or F = Flash

Transition Type
0 = Shortway
Non-zero = Lengthen

TRAFFIC SIGNAL TIMING - PROGRAM 2005L

W. Morena M — Morena — Morena WM

PHASE TIMING

INTERVAL		1	2	3	4	5	6	7	8
WALK	0		7						7
FLASH D/W	1		24						16
MIN GREEN	2	4	10				10		4
TYPE 3 DET	3								
ROD/VEH	4								
VEH EXTEN *	5	2	4.0				3.4		2
MAX GAP *	6	2	4.0				3.4		2
MIN GAP *	7	2	0.2				0.2		2
MAX EXTEN	8	30	60				60		40
MAX 2	9								
	A								
CALLTO PHASE	B	6	6						
REDUCE BY	C		0.1				0.1		
REDUCE EVERY	D		0.8				0.9		
YELLOW	E	3.0	4.0				4.0		3.0
RED CLEAR	F	1.0	1.0				1.0		1.0

PREEMPT

	E	
RR1 DELAY		0
RR1 CLEAR		1
EVA DELAY	0	2
EVA CLEAR	3	3
EVB DELAY		4
EVB CLEAR		5
EVC DELAY	0	6
EVC CLEAR	3	7
EVD DELAY		8
EVD CLEAR		9
RR2 DELAY		A
RR2 CLEAR		B
EV CLR TMR		C
EV DLY TMR		D
RR CLR TMR		E
RR DLY TMR		F

KEYSTROKES: F + PHASE + LOCATION

MAX INITIAL (F-0-E) = 0

RED REVERT (F-0-F) = 5

ALL RED START (F-C-0) = 0

DOC 2/25/03

* MUST BE SAME FOR NON-DENSITY OPERATION

PHASE FUNCTION FLAGS

KEYSTROKES: F+F+FUNCTION#

FUNCTION		1	2	3	4	5	6	7	8
PERMIT	0	X	X				X		X
RED LOCK	1								
YELLOW LOCK	2								
VEH RECALL	3								
PED RECALL	4								
PEDS VIEW	5		X						X
REST IN WALK	6								
RED REST	7								
DOUBLE ENTRY	8								
MAX RECALL	9								
SOFT RECALL	A		X				X		
MAX 2	B								
COND SERVE	C								
RESERVED	D								
STARTUP	E		X				X		
FIRST PHASES	F								X

C00 — 5
C01 — 5
C02 — 5
C03 — 88
Com52

OVERLAP TIMING

KEYSTROKE: F+ COLOR CODE+OVERLAP

	9 GREEN	C YELLO	D RED
OVERLAP A			
OVERLAP B			
OVERLAP C			
OVERLAP D			

PHASE SEQUENCES (CFO)

	1	2	3	4	5	6	7	8
LAG 0 (FREE)		X				X		X

LOC: MORENA BL @ W MORENA BL (W) DATE: 9-15-93 10.45

PAGE 1 OF ___

DETECTOR TIMES (332 CABINET)

X → SET DELAY SET CARRY OBS COUNT OBS DELAY OBS CARRY

Y ↓

	1	2	3	4	5	6	7	8	9	A
0	111	5J1	111	5J1	111	5J1	111	5J1	111	5J1
1	212U	6J2U	212U 1.8	6J2U 1.8	212U	6J2U	212U	6J2U	212U	6J2U
2	212L	6J2L	212L	6J2L	212L	6J2L	212L	6J2L	212L	6J2L
3	213U 10	6J3U	213U	6J3U	213U	6J3U	213U	6J3U	213U	6J3U
4	213L	6J3L	213L	6J3L			213L	6J3L	213L	6J3L
5	214	6J4	214	6J4			214	6J4	214	6J4
6	315	7J5	315	7J5	315	7J5	315	7J5	315	7J5
7	416U	8J6U 10	416U	8J6U	416U	8J6U	416U	8J6U	416U	8J6U
8	416L	8J6L 2	416L	8J6L	416L	8J6L	416L	8J6L	416L	8J6L
9	417U	8J7U	417U	8J7U	417U	8J7U	417U	8J7U	417U	8J7U
A	417L	8J7L	417L	8J7L			417L	8J7L	417L	8J7L
B	418	8J8	418	8J8			418	8J8	418	8J8
C	119U	5J9U	119U	5J9U	119U	5J9U	119U	5J9U	119U	5J9U
D	319L	7J9L	319L	7J9L	319L	7J9L	319L	7J9L	319L	7J9L
E										
F										

KEYSTROKES: D + X + Y

TIME OF DAY FEATURES

EVENT	TIME	FUNCT	DAY OF WEEK 1 (S)	2 (M)	3 (T)	4 (W)	5 (T)	6 (F)	7 (S)
0	0530	C		X	X	X	X	X	
1	0800	C		X	X	X	X	X	
2	0001	E	X	X	X	X	X	X	X
3									
4									
5									
6									
7									
8									
9									
A									
B									
C									
D									
E									
F									

ORIG 12-22-97

KEYSTROKES: 7+EVENT#

FUNCTION BY PHASE

	1	2	3	4	5	6	7
	X						
	X						

KEYSTROKES: D-F-EVENT #

TIME OF DAY LOCAL FUNCTION CODES

0 - PERMIT
1 - RED LOCK
2 - YELLOW OCK
3 - VEH RECALL
4 - PED RECALL
5 - RESERVED
6 - REST IN WALK
7 - RED REST
8 - DBL ENTRY
9 - VEH MAX RCL
A - SOFT RECALL
B - MAX II EXT
C - COND SERVE
D - TOD LAG Ø
E - 1 - LOCAL OVERIDE
2 - PHASE BANK 2
3 - PHASE BANK 3
7 - DET COUNT
8 - SPLIT MONITOR
F - TOD OUTPUTS
1 - TOD OUT 1
2 - TOD OUT 2
3 - TOD OUT 3
4 - TOD OUT 4

CURRENT TIME AND DATE

8-0 HOUR, MINUTE, DAY OF WEEK
8-1 DAY OF MONTH, YEAR, MONTH
8-F SECONDS

CONFIGURATION DATA

NOTE "E" KEY ENABLED (F-9-E = 0)

KEYSTROKES: E+E+INTERVAL

INTERVAL		PHASE 1	2	3	4	5	6	7	8
0	EXCLU PH								
1	RP1 GRN CL								
2	RP2 GRN CL								
3	RP2 LTO								
4									
5	OLA COMIT								X
6	OLB COMIT								
7	OLC COMIT								
8	OLD COMIT								
9	OU FL YEL								
A	EMVEH A		X						
B	EMVEH B								
C	EMVEH C	X				X			
D	EMVEH D								
E	EXTRA	X		X	X	X			
F	IC SELECT		X						

EXTRA (E+E+E)
1-TBC TYPE 1
2-NEMA COOD
3-DAYLIGHT SAV
4-EV ADVANCE
6-SPECIAL EVENT
7-PRETIMED
8-SPLIT RING

ICSEL (E+E+F)
1- SIMPLEX IN
2-2-WAY MODEM
3-7 WIRE IN
4-FLH/FREE
5-SIMPLEX OUT
7-7 WIRE OUT

ASSIGNS (E+F+F)
1-ART OVERLAP
2-TOD OUTPUTS
3-STEADY EV BEAC
4-FLASH EV BEAC

KEYSTROKES: E-F+INTERVAL

INTERVAL		PHASE 1	2	3	4	5	6	7	8
0									
1	RR OLAP A								
2	RR OLAP B								
3	RR OLAP C								
4	RR OLAP D								
5	PED2P		X						
6	PED6P								
7	PED4P								
8	PED8P								X
9	FLH YELO								
A	OVERLAP A	X							
B	OVERLAP B								X
C	OVERLAP C								
D	OVERLAP D								
E	RESTRICT								
F	PASSIGNS	X							

INTERSECTION: NAPA ST @ RILEY ST

Group Assignment:
Field Master Assignment:

N/S Street Name: NAPA
E/W Street Name: RILEY

223 Program

Row	Column # ---->	1	2	3	4	5	6	7	8
			NAPA		RILEY				TROLLEY STATION
	Phase # ---->								
0	Ped Walk		7		7		7		7
1	Ped FDW		10		21		10		23
2	Min Green		10		4		10		4
3	Type 3 Limit								
4	Add/Veh								
5	Veh Extn		5.0		2.0		4.8		2.0
6	Max Gap		5.0		2.0		4.8		2.0
7	Min Gap		0.2		2.0		0.2		2.0
8	Max Limit		60		40		60		40
9	Max Limit 2								
A	Bus Adv								
B	Call to Phs								
C	Reduce By		0.1				0.1		
D	Every		0.6				0.7		
E	Yellow		3.9		3.9		3.9		3.9
F	Red Clear		1.0		1.0		1.0		1.0

Phase Timing - Bank 1
F + Phase + Row

<F Page>

	E
RR-1 Delay	
RR-1 Clear	
EV-A Delay	0
EV-A Clear	0
EV-B Delay	0
EV-B Clear	0
EV-C Delay	0
EV-C Clear	0
EV-D Delay	0
EV-D Clear	0
RR-2 Delay	
RR-2 Clear	
View EV Delay	---
View EV Clear	---
View RR Delay	---
View RR Clear	---

F + E + Row

Row		F
0	Permit	_2_4_6_8
1	Red Lock	
2	Yellow Lock	
3	Min Recall	_2___6__
4	Ped Recall	
5	Peds (View)	_2_4_6_8
6	Rest In Walk	
7	Red Rest	
8	Dbl Entry	___4___8
9	Max Recall	
A	Soft Recall	
B	Max 2	
C	Cond Serv	
D	Ped Lock	12345678
E	Yellow Start	_2___6__
F	1st Phases	___4___8

F + F + Row

Max Initial	0	F + 0 + E
Red Revert	5.0	F + 0 + F
All Red Start	0.0	F + C + O

Start / Revert Times

Drop Number	3	C + 0 + 0
Zone Number	3	C + 0 + 1
Area Number	5	C + 0 + 2
Area Address	80	C + 0 + 3
QuicNet Channel	COM 51	(QuicNet)

Communication Addresses

Overlap Timing

	Row	9 Green Clear	C Yellow Change	D Red Clear	0 Load-Switch #
Overlap A	A				
Overlap B	B				
Overlap C	C				
Overlap D	D				

<F Page>
F + COLOR +

<D Page>
D + 0 + OVERLAP

Manual Plan	0	C + A + 1
Manual Offset	0	C + B + 1

Manual Selection

Manual Plan
0 = Automatic
1-9 = Plan 1-9
14 = Free
15 = Flash

Manual Offset
0 = Automatic
1 = Offset A
2 = Offset B
3 = Offset C

C + F + O

	F	Row
Free Lag	_2_4_6_8	0

Lag Phases <C Page>

Downtime Flash	255	(minutes)

Downtime Before Auto Manual Flash
F + 0 + 8

Disable Ports	_234___

Disable Communication Ports
D + D + 9

Timing Sheet By: M2S
Approved By: FLG
Drawing Number: 33302-10-D
Timing Implemented On: 04/14/10

Printed on 4/8/2010 10:55 AM

INTERSECTION: NAPA ST @ RILEY ST

Row	Time	Function	Day of Week	Column F Phases/Bits
0	00 : 01	E	1234567	1
1				
2				
3				
4				
5				
6				
7				
8				
9				
A				
B				
C				
D				
E				
F				

TOD Function

7 + ROW

<D Page>

D + F + ROW

T.O.D. Functions
0 = Permitted Phases
1 = Red Lock
2 = Yellow Lock
3 = Veh Min Recall
4 = Ped Recall
5 =
6 = Rest In Walk
7 = Red Rest
8 = Double Entry
9 = Veh Max Recall
A = Veh Soft Recall
B = Maximum 2
C = Conditional Service
D = Free Lag Phases
E = Bit 1 - Local Override
Bit 2 - Phase Bank 2
Bit 3 - Phase Bank 3
Bit 4 - Disable Detector OFF Monitor
Bit 7 - Detector Count Monitor
Bit 8 - Real Time Split Monitor
F = Output Bits 1 thru 4

Row		F
0		
1	RR Overlap A - Phases	
2	RR Overlap B - Phases	
3	RR Overlap C - Phases	
4	RR Overlap D - Phases	
5	Ped 2P	2
6	Ped 6P	6
7	Ped 4P	4
8	Ped 8P	8
9	Yellow Flash Phases	
A	Overlap A - Phases	
B	Overlap B - Phases	
C	Overlap C - Phases	
D	Overlap D - Phases	
E	Restricted Phases	
F	Assign 5 Outputs	

Configuration

<E Page>

E + F + ROW

Day of Week

1 = Sunday
2 = Monday
3 = Tuesday
4 = Wednesday
5 = Thursday
6 = Friday
7 = Saturday

Assign 5 Outputs
1 = Right Turn Overlap
2 = TOD Outputs
3 = EV Beacon - Steady
4 = EV Beacon - Flashing
5 = Special Event Outputs
6 = Phase 3 & 7 Ped
7 = Advanced Warning Sign
8 = Bus Advance

Row		E
0	Exclusive Phases	
1	RR-1 Clear Phases	
2	RR-2 Clear Phases	
3	RR-2 Limited Service	
4	Prot / Perm Phases	
5	Overlap A - Green Omit	
6	Overlap B - Green Omit	
7	Overlap C - Green Omit	
8	Overlap D - Green Omit	
9	Overlap Yellow Flash	
A	EV-A Phases	2
B	EV-B Phases	4
C	EV-C Phases	6
D	EV-D Phases	8
E	Extra 1 Config. Bits	1 345
F	IC Select (Interconnect)	2

Configuration

For access, set F + 9 + E = 1

E + E + ROW

Extra 1 Flags
1 = TBC Type 1
2 = NEMA Ext. Coord
3 = Auto Daylight Savings
4 = EV Advance
5 = Remote Download
6 = Special Event
7 = Pretimed Operation
8 = Split Ring Operation

IC Select Flags
1 =
2 = Modem
3 = 7-Wire Slave
4 = Flash / Free
5 =
6 = Simplex Master
7 = 7-Wire Master
8 = Offset Interrupter

Time and Date

8-0 Hour, Minute, Day-of-Week
8-1 Day-of-Month, Year, Month
8-F Seconds

Disable Parity	0	D+B+0

Dial-Up Telephone Communications

(If set to a non-zero value, parity will be disabled)

Program Information

C + C + 0 = program
C + C + F = version

Remote Download

C + 0 + 4 = 1 -255
w/ E + E + E bit 5 on

Row	1 Delay	3 Carry-over	Detector Name	332 Input File	Detector Number
0				1I1	14
1		1.8		2I2U	1
2				2I2L	5
3				2I3U	21
4				2I3L	25
5				2I4	9
6				3I5	16
7	5.0			4I6U	3
8				4I6L	7
9				4I7U	23
A				4I7L	27
B				4I8	11
C				1I9U	18
D				3I9L	20
E	---	---	---	---	---
F	---	---	---	---	---

Row	2 Delay	4 Carry-over	Detector Name	332 Input File	Detector Number
0				5J1	13
1		1.8		6J2U	2
2				6J2L	6
3				6J3U	22
4				6J3L	26
5				6J4	10
6				7J5	15
7	5.0			8J6U	4
8				8J6L	8
9				8J7U	24
A				8J7L	28
B				8J8	12
C				5J9U	17
D				7J9L	19
E	---	---	---	---	---
F	---	---	---	---	---

Detector Delay & Carryover <D Page>

D + X (across) + ROW

Row	Detector Numbers	E
A	1 2 3 4 5 6 7 8	12345678
B	9 10 11 12 -- -- -- --	1234____
C	13 14 15 16 17 18 19 20	12345678
D	-- -- -- -- 21 22 23 24	____5678
E	-- -- -- -- -- -- -- --	1234____
F	-- 25 26 27 28 -- -- --	_2345___

Active Detectors <D Page>

Row		0 Detector #
0		
1	System Det. # 1	
2	System Det. # 2	
3	System Det. # 3	
4	System Det. # 4	
5	System Det. # 5	
6	System Det. # 6	
7	System Det. # 7	
8	System Det. # 8	

System Detectors <D Page>

Max ON (min)	5	D+A+E
Max OFF (min)	60	D+A+F

Detector Failure Monitor

Phase Number		F+C+1
Time Before Yellow		F+C+3

Advance Warning Beacon - Sign 1

Phase Number		F+D+1
Time Before Yellow		F+D+3

Advance Warning Beacon - Sign 2

Long Failure	0.5	F+0+6
Short Failure	0.5	F+0+7

Power Cycle Correction (Default = 0.5)

Coordination Timing By: KH&A
Implemented On: 1/26/2010

Row	Column # ---->	Plan 1	2	3	4	5	6	7	8	9
	Plan Name ---->		Mid & Weekend			AM	PM			
0	Cycle Length		48			55	68			
1	Phase 1 - ForceOff									
2	Phase 2 - ForceOff		0			0	0			
3	Phase 3 - ForceOff									
4	Phase 4 - ForceOff		22			28	30			
5	Phase 5 - ForceOff									
6	Phase 6 - ForceOff		0			0	0			
7	Phase 7 - ForceOff									
8	Phase 8 - ForceOff		22			28	30			
9	Ring Offset									
A	Offset A		42			37	44			
B	Offset B									
C	Offset C									
D	Permissive		6			6	7			
E	Hold Release		255			255	255			
F	Ped Shift		0			0	0			

Coordination <C Page>

C + Plan + ROW

FOR OBSERVATION ONLY

Master Plan	C + A + 2
Current Plan	C + A + 3
Next Plan	C + A + 4
T.O.D. Plan	C + A + 5
Master Cycle	C + A + 0
Ring A Cycle	C + B + 0
Ring B Cycle	C + D + 0
Min Cycle	C + A + E
Max Cycle	C + B + E

Row	Time	Plan	Offset	Day of Week
0	06 : 30	5	A	_23456_
1	09 : 00	2	A	1_____7
2	10 : 30	2	A	_23456_
3	13 : 30	6	A	_23456_
4	18 : 00	2	A	_23456_
5	19 : 00	E	A	1_____7
6	20 : 00	E	A	1234567
7				
8				
9				
A				
B				
C				
D				
E				
F				

TOD Coordination

<9 Key with C+0+9=1>

	E
Plan 1	
Plan 2	_2___6__
Plan 3	
Plan 4	
Plan 5	_2___6__
Plan 6	_2___6__
Plan 7	
Plan 8	
Plan 9	
Coord Ped*	
NEMA Hold	

Sync Phases

C + E + FUNCTION #

Row		F
0	Free Lag	
1	Plan 1 - Lag	
2	Plan 2 - Lag	_2_4_6_8
3	Plan 3 - Lag	
4	Plan 4 - Lag	
5	Plan 5 - Lag	_2_4_6_8
6	Plan 6 - Lag	_2_4_6_8
7	Plan 7 - Lag	
8	Plan 8 - Lag	
9	Plan 9 - Lag	
A	Coord Max *	
B	Coord Lag *	
C		
D		
E		
F		

Lag Phases <C Page>

C + F + FUNCTION #

Transition Type	0

TBC Transition
C + D + D

Plan Select
1 thru 9 = Coordination Plan 1 thru 9
14 or E = Free
15 or F = Flash

Transition Type
0 = Shortway
Non-zero = Lengthen

Row	1 Delay	3 Carry-over
0		
1		1.8
2		
3		
4		
5		
6		
7	5.0	
8		
9		
A		
B		
C		
D		
E		---
F	---	---

Detector Name	332 Input File	Detector Number
	1I1	14
	2I2U	1
	2I2L	5
	2I3U	21
	2I3L	25
	2I4	9
	3I5	16
	4I6U	3
	4I6L	7
	4I7U	23
	4I7L	27
	4I8	11
	1I9U	18
	3I9L	20
---	---	---
---	---	---

Row	2 Delay	4 Carry-over
0		
1		1.8
2		
3		
4		
5		
6		
7		
8		
9		
A		
B		
C		
D		
E	---	---
F	---	---

Detector Name	332 Input File	Detector Number
	5J1	13
	6J2U	2
	6J2L	6
	6J3U	22
	6J3L	26
	6J4	10
	7J5	15
	8J6U	4
	8J6L	8
	8J7U	24
	8J7L	28
	8J8	12
	5J9U	17
	7J9L	19
---	---	---
---	---	---

Detector Delay & Carryover <D Page>

D + X (across) + ROW

Row	Detector Numbers	E
A	1 2 3 4 5 6 7 8	12345678
B	9 10 11 12 -- -- -- --	1234
C	13 14 15 16 17 18 19 20	12345678
D	-- -- -- -- 21 22 23 24	5678
E	-- -- -- -- -- -- -- --	1234
F	-- 25 26 27 28 -- -- --	2345

Active Detectors <D Page>

Row		0 Detector #
0		
1	System Det. # 1	0
2	System Det. # 2	0
3	System Det. # 3	0
4	System Det. # 4	0
5	System Det. # 5	0
6	System Det. # 6	0
7	System Det. # 7	0
8	System Det. # 8	0

System Detectors <D Page>

Max ON (min)	5	D+A+E
Max OFF (min)	60	D+A+F

Detector Failure Monitor

Phase Number	0	F+C+1
Time Before Yellow	0.0	F+C+3

Advance Warning Beacon - Sign 1

Phase Number	0	F+D+1
Time Before Yellow	0.0	F+D+3

Advance Warning Beacon - Sign 2

Long Failure	0.5	F+0+6
Short Failure	0.5	F+0+7

Power Cycle Correction (Default = 0.5)

(These parameters are NOT downloaded.)

INTERSECTION: Vega St & Morena Bl

223 Program

Coordination Timing By: FLG
Implemented On: 03/31/99

DOC 4/2/03

Row	Column # →	Plan 1	Plan 2	Plan 3	Plan 4	Plan 5	Plan 6	Plan 7	Plan 8	Plan 9
	Plan Name →	AM	Mid							
0	Cycle Length	~~49~~ 54	96							
1	Phase 1 - ForceOff	31	47							
2	Phase 2 - ForceOff	0	0							
3	Phase 3 - ForceOff									
4	Phase 4 - ForceOff	20	37							
5	Phase 5 - ForceOff	31	51							
6	Phase 6 - ForceOff	0	0							
7	Phase 7 - ForceOff									
8	Phase 8 - ForceOff	20	37							
9	Ring Offset									
A	Offset A	35	17							
B	Offset B									
C	Offset C									
D	Permissive	5	10							
E	Hold Release	255	255							
F	Ped Shift	0	0							

Coordination <C Page>
C + Plan + ROW

FOR OBSERVATION ONLY

Master Plan	C + A + 2
Current Plan	C + A + 3
Next Plan	C + A + 4
T.O.D. Plan	C + A + 5
Master Cycle	C + A + 0
Ring A Cycle	C + B + 0
Ring B Cycle	C + D + 0
Min Cycle	C + A + E
Max Cycle	C + B + E

Row	Time	Plan	Offset	Day of Week
0	06:30	1	A	_23456_
1	08:30	E	A	1234567
2	~~10:30~~	~~E 2~~	~~A~~	~~_23456_~~
3	~~13:30~~	~~E 1~~	~~A~~	~~_23456_~~
4				
5				
6				
7				
8				
9				
A				
B				
C				
D				
E				
F				

TOD Coordination
<9 Key with C+0+9=1>

Plan Select
1 thru 9 = Coordination Plan 1 thru 9
14 or E = Free
15 or F = Flash

	E
Plan 1	_2___6__
Plan 2	_2___6__
Plan 3	
Plan 4	
Plan 5	
Plan 6	
Plan 7	
Plan 8	
Plan 9	
Coord Ped*	
NEMA Hold	

Sync Phases
C + E + FUNCTION #

Row		F
0	Free Lag	_2_4_6_8
1	Plan 1 - Lag	_2_4_6_8
2	Plan 2 - Lag	_2_4_6_8
3	Plan 3 - Lag	
4	Plan 4 - Lag	
5	Plan 5 - Lag	
6	Plan 6 - Lag	
7	Plan 7 - Lag	
8	Plan 8 - Lag	
9	Plan 9 - Lag	
A	Coord Max *	
B	Coord Lag *	
C		
D		
E		
F		

Lag Phases <C Page>
C + F + FUNCTION #

Transition Type	0

TBC Transition
C + D + D

Transition Type
0 = Shortway
Non-zero = Lengthen

NTERSECTION: Vega St & West Morena Bl

223 ogram

Group Assignment:
Field Master Assignment:

N/S Street Name: W. Morena Bl
E/W Street Name: Vega St

Last Change: 03/31/99 Drawing Number: 26882-1-D
Timing Sheet By: FLG Sys. Ref. Number:
Approved By: Timing implemented on:

Row	Column # --->	Morena		Vega		Morena		Vega	
	Phase # --->	1	2	3	4	5	6	7	8
0	Ped Walk		7		7		7		7
1	Ped FDW		12		24		17		24
2	Min Green	4	10		4	4	10		4
3	Type 3 Limit								
4	Add/Veh								
5	Veh Extn	2.0	4.4		2.0	2.0	3.9		2.0
6	Max Gap	2.0	4.4		2.0	2.0	3.9		2.0
7	Min Gap	2.0	0.2		2.0	2.0	0.2		2.0
8	Max Limit	30	60		40	30	60		40
9	Max Limit 2								
A	Bus Adv								
B	Call to Phs								
C	Reduce By		0.1				0.1		
D	Every		0.7				0.8		
E	Yellow	3.4 ~~3.0~~	4.7		3.9 ~~3.0~~	3.4 ~~3.0~~	4.7		3.9 ~~3.0~~
F	Red Clear	1.0	1.0		1.0	1.0	1.0		1.0

Phase Timing - Bank 1
F + Phase + Row

<F Page>

DOC 2/25/03

	E
RR-1 Delay	
RR-1 Clear	
EV-A Delay	0
EV-A Clear	0
EV-B Delay	0
EV-B Clear	0
EV-C Delay	0
EV-C Clear	0
EV-D Delay	0
EV-D Clear	0
RR-2 Delay	
RR-2 Clear	
View EV Delay	---
View EV Clear	---
View RR Delay	---
View RR Clear	---

Preempt Timing
F + E + Row

Row		F
0	Permit	12_456_8
1	Red Lock	
2	Yellow Lock	
3	Min Recall	
4	Ped Recall	
5	Peds (View)	_2_4_6_8
6	Rest In Walk	
7	Red Rest	
8	Dbl Entry	___4___8
9	Max Recall	
A	Soft Recall	_2___6__
B	Max 2	
C	Cond Serv	
D	Ped Lock	12345678
E	Yellow Start	_2___6__
F	1st Phases	___4___8

Phase Functions <F Page>
F + F + Row

Max Initial	0	F + 0 + E
Red Revert	5.0	F + 0 + F
All Red Start	0.0	F + C + O

Start / Revert Times

Drop Number	7 ~~8~~	C + 0 + 0
Zone Number	7	C + 0 + 1
Area Number	5	C + 0 + 2
Area Address	90	C + 0 + 3
QuicNet Channel	Com 52	(QuicNet)

Communication Addresses

Row		9 Green Clear	C Yellow Change	D Red Clear	0 Load-Switch #
A	Overlap A				
B	Overlap B				
C	Overlap C				
D	Overlap D				

Overlap Timing <F Page> <D Page>
F + COLOR + D + 0 + OVERLAP

Manual Plan	0	C + A + 1
Manual Offset	0	C + B + 1

Manual Selection

Manual Plan
0 = Automatic
1-9 = Plan 1-9
14 = Free
15 = Flash

Manual Offset 0
= Automatic
1 = Offset A
2 = Offset B
3 = Offset C

C + F + O Free Lag

F	Row
_2_4_6_8	0

Lag Phases <C Page>

Downtime Flash	~~60~~ 255	(minutes)

Downtime Before Auto Manual Flash
F + 0 + 8

Disable Ports	234

Disable Communications Ports
D + D + 9

00

INTERSECTION: Vega St & Morena Bl

223 Program

Row	Time	Function	Day of Week	Column F Phases/Bits
0	00:01	E	1234567	1_____
1				
2				
3				
4				
5				
6				
7				
8				
9				
A				
B				
C				
D				
E				
F				

TOD Function <D Page>

7 + ROW D + F + ROW

T.O.D. Functions
0 = Permitted Phases
1 = Red Lock
2 = Yellow Lock
3 = Veh Min Recall
4 = Ped Recall
5 =
6 = Rest In Walk
7 = Red Rest
8 = Double Entry
9 = Veh Max Recall
A = Veh Soft Recall
B = Maximum 2
C = Conditional Service
D = Free Lag Phases
E = Bit 1 - Local Override
Bit 2 - Phase Bank 2
Bit 3 - Phase Bank 3
Bit 4 - Disable Detector OFF Monitor
Bit 7 - Detector Count Monitor
Bit 8 - Real Time Split Monitor
F = Output Bits 1 thru 4

Row		F
0		
1	RR Overlap A - Phases	
2	RR Overlap B - Phases	
3	RR Overlap C - Phases	
4	RR Overlap D - Phases	
5	Ped 2P	_2_____
6	Ped 6P	_____6__
7	Ped 4P	___4____
8	Ped 8P	_____8
9	Yellow Flash Phases	
A	Overlap A - Phases	
B	Overlap B - Phases	
C	Overlap C - Phases	
D	Overlap D - Phases	
E	Restricted Phases	
F	Assign 5 Outputs	

Configuration <E Page>

E + F + ROW

Day of Week

1 = Sunday
2 = Monday
3 = Tuesday
4 = Wednesday
5 = Thursday
6 = Friday
7 = Saturday

Row		E
0	Exclusive Phases	
1	RR-1 Clear Phases	
2	RR-2 Clear Phases	
3	RR-2 Limited Service	
4	Prot / Perm Phases	
5	Overlap A - Green Omit	
6	Overlap B - Green Omit	
7	Overlap C - Green Omit	
8	Overlap D - Green Omit	
9	Overlap Yellow Flash	
A	EV-A Phases	_2__5___
B	EV-B Phases	___4____
C	EV-C Phases	1____6__
D	EV-D Phases	_____8
E	Extra 1 Config. Bits	1_345___
F	IC Select (Interconnect)	_2_____

Configuration

For access, set F + 9 + E = 1 E + E + ROW

Extra 1 Flags
1 = TBC Type 1
2 = NEMA Ext. Coord
3 = Auto Daylight Savings
4 = EV Advance
5 = Remote Download
6 = Special Event
7 = Pretimed Operation
8 = Split Ring Operation

IC Select Flags
1 =
2 = Modem
3 = 7-Wire Slave
4 = Flash / Free
5 =
6 = Simplex Master
7 = 7-Wire Master
8 = Offset Interrupter

Assign 5 Outputs
1 = Right Turn Overlap
2 = TOD Outputs
3 = EV Beacon - Steady
4 = EV Beacon - Flashing
5 = Special Event Outputs
6 = Phase 3 & 7 Ped
7 = Advanced Warning Sign
8 =

Time and Date

8-0 Hour, Minute, Day-of-Week
8-1 Day-of-Month, Year, Month
8-F Seconds

Disable Parity	0	D+B+0

Dial-Up Telephone Communications

(If set to a non-zero value, parity will be disabled)

(This parameter is NOT downloaded)

Program Information

C + C + 0 = program
C + C + F = version

Remote Download

C + 0 + 4 = 1 -255
w/ E + E + E bit 5 on

Morena Blvd Station Area Planning Study

Traffic Analysis Appendix:

Signal Timing Reports - Stand Alone

INTERS TION: Ashton St. & Morena Bl. 27 rogram

Group Assignment:
Field Master Assignment:

N/S Street Nam. Morena
E/W Street Name: Ashton

Last Change: N/A
Timing Sheet By: BJU
Approved By:

Drawing Number: 30733-1-.
Sys. Ref. Number:
Timing implemented on: 4/18/02 11:30

Row	Column # --->	1	2	3	4	5	6	7	8
			Morena				Morena		Ashton
	Phase # --->	1	2	3	4	5	6	7	8
	N								
0	Ped Walk		7						7
1	Ped FDW		17 ~~14~~	DOC 11/4/02				DOC 11/4/02	~~20~~
2	Min Green	4	10				10		4
3	Type 3 Limit								
4	Add/Veh								
5	Veh Extn	2.0	4.3				4.0		2.0
6	Max Gap	2.0	4.3				4.0		2.0
7	Min Gap	2.0	0.2				0.2		2.0
8	Max Limit	30	60				60		40
9	Max Limit 2								
A	Bus Adv								
B	Call to Phs	6	6						
C	Reduce By		0.1				0.1		
D	Every		~~1.5~~ 0.7	IIC for Bikes 4/25/02			0.8 ~~1.6~~	IIC for Bikes 4/25/02	
E	Yellow	3.4 ~~3.0~~	4.3				4.4		3.9 ~~3.0~~
F	Red Clear	1.0	1.0				1.0		1.0

Phase Timing - Bank 1 <F Page>
F + Phase + Row

DOC 2/25/03

	E		F	Row
RR-1 Delay		Permit	12___6_8	0
RR-1 Clear		Red Lock		1
EV-A Delay	0	Yellow Lock		2
EV-A Clear	0	Min Recall		3
EV-B Delay	0	Ped Recall		4
EV-B Clear	0	Peds (View)	_2_____8	5
EV-C Delay	0	Rest In Walk		6
EV-C Clear	0	Red Rest		7
EV-D Delay	0	Dbl Entry		8
EV-D Clear	0	Max Recall		9
RR-2 Delay		Soft Recall	_2___6__	A
RR-2 Clear		Max 2		B
View EV Delay	---	Cond Serv		C
View EV Clear	---	Ped Lock	12345678	D
View RR Delay	---	Yellow Start	_2___6__	E
View RR Clear	---	1st Phases	_____8	F

Preempt Timing
F + E + Row

Phase Functions <F Page>
F + F + Row

Max Initial	0	F + 0 + E
Red Revert	5.0	F + 0 + F
All Red Start	0.0	F + C + O

Start / Revert Times

Drop Number	9	C + 0 + 0
Zone Number	9	C + 0 + 1
Area Number	5	C + 0 + 2
Area Address	102	C + 0 + 3
QuicNet Channel	~~DIGI 59~~	(QuicNet) Com52

Communication Addresses

C + F + O	F	Row
Free Lag	_2___6_8	0

Lag Phases <C Page>

Row		9	C	D	0
		Green Clear	Yellow Change	Red Clear	Load-Switch #
A	Overlap A				
B	Overlap B				
C	Overlap C				
D	Overlap D				

Overlap Timing <F Page> <D Page>
F + COLOR + D + 0 + OVERLAP

Manual Plan	14	C + A + 1
Manual Offset	0	C + B + 1

Manual Selection

Manual Plan
0 = Automatic
1-9 = Plan 1-9
14 = Free
15 = Flash

Manual Offset 0
= Automatic
1 = Offset A
2 = Offset B
3 = Offset C

Downtime Flash	255 (minutes)

Downtime Before Auto Manual Flash
F + 0 + 8

Disable Ports	234

Disable Communications Ports
D + D + 9

Row	Time	Function	Day of Week	Column F Phases/Bits
0				
1				
2				
3				
4				
5				
6				
7				
8				
9				
A				
B				
C				
D				
E				
F				

TOD Function <D Page>

7 + ROW D + F + ROW

T.O.D. Functions
0 = Permitted Phases
1 = Red Lock
2 = Yellow Lock
3 = Veh Min Recall
4 = Ped Recall
5 =
6 = Rest In Walk
7 = Red Rest
8 = Double Entry
9 = Veh Max Recall
A = Veh Soft Recall
B = Maximum 2
C = Conditional Service
D = Free Lag Phases
E = Bit 1 - Local Override
Bit 2 - Phase Bank 2
Bit 3 - Phase Bank 3
Bit 4 - Disable Detector OFF Monitor
Bit 7 - Detector Count Monitor
Bit 8 - Real Time Split Monitor
F = Output Bits 1 thru 4

Row		F
0		
1	RR Overlap A - Phases	
2	RR Overlap B - Phases	
3	RR Overlap C - Phases	
4	RR Overlap D - Phases	
5	Ped 2P	_2_____
6	Ped 6P	
7	Ped 4P	
8	Ped 8P	_____8
9	Yellow Flash Phases	
A	Overlap A - Phases	
B	Overlap B - Phases	
C	Overlap C - Phases	
D	Overlap D - Phases	
E	Restricted Phases	
F	Assign 5 Outputs	

Configuration <E Page>

E + F + ROW

Day of Week

1 = Sunday
2 = Monday
3 = Tuesday
4 = Wednesday
5 = Thursday
6 = Friday
7 = Saturday

Row		E
0	Exclusive Phases	
1	RR-1 Clear Phases	
2	RR-2 Clear Phases	
3	RR-2 Limited Service	
4	Prot / Perm Phases	
5	Overlap A - Green Omit	
6	Overlap B - Green Omit	
7	Overlap C - Green Omit	
8	Overlap D - Green Omit	
9	Overlap Yellow Flash	
A	EV-A Phases	_2_____
B	EV-B Phases	
C	EV-C Phases	1_____6__
D	EV-D Phases	_____8
E	Extra 1 Config. Bits	1_345___
F	IC Select (Interconnect)	_2_____

Configuration

For access, set F + 9 + E = 1 E + E + ROW

Extra 1 Flags
1 = TBC Type 1
2 = NEMA Ext. Coord
3 = Auto Daylight Savings
4 = EV Advance
5 = Remote Download
6 = Special Event
7 = Pretimed Operation
8 = Split Ring Operation

IC Select Flags
1 =
2 = Modem
3 = 7-Wire Slave
4 = Flash / Free
5 =
6 = Simplex Master
7 = 7-Wire Master
8 = Offset Interrupter

Assign 5 Outputs
1 = Right Turn Overlap
2 = TOD Outputs
3 = EV Beacon - Steady
4 = EV Beacon - Flashing
5 = Special Event Outputs
6 = Phase 3 & 7 Ped
7 = Advanced Warning Sign
8 =

Time and Date

8-0 Hour, Minute, Day-of-Week
8-1 Day-of-Month, Year, Month
8-F Seconds

Disable Parity	0	D+B+0

Dial-Up Telephone Communications
(If set to a non-zero value, parity will be disabled)
(This parameter is NOT downloaded)

Program Information

C + C + 0 = program
C + C + F = version

Remote Download

C + 0 + 4 = 1 -255
w/ E + E + E bit 5 on

INTERS TION: Ashton St. & Morena Bl.

223 Program

Row	1 Delay	3 Carry-over	Detector Name	332 Input File	Detector Number
0				1I1	14
1		1.8		2I2U	1
2		1.8		2I2L	5
3				2I3U	21
4				2I3L	25
5				2I4	9
6				3I5	16
7				4I6U	3
8				4I6L	7
9				4I7U	23
A				4I7L	27
B				4I8	11
C				1I9U	18
D				3I9L	20
E		---	---	---	---
F	---	---	---	---	---

Row	2 Delay	4 Carry-over	Detector Name	332 Input File	Detector Number
0				5J1	13
1		1.8		6J2U	2
2		1.8		6J2L	6
3				6J3U	22
4				6J3L	26
5				6J4	10
6				7J5	15
7	10.0			8J6U	4
8	2.0			8J6L	8
9				8J7U	24
A				8J7L	28
B				8J8	12
C				5J9U	17
D				7J9L	19
E	---	---	---	---	---
F	---	---	---	---	---

Detector Delay & Carryover <D Page>

D + X (across) + ROW

Row	Detector Numbers	E
A	1 2 3 4 5 6 7 8	12345678
B	9 10 11 12 -- -- -- --	1234
C	13 14 15 16 17 18 19 20	12345678
D	-- -- -- -- 21 22 23 24	5678
E	-- -- -- -- -- -- -- --	1234
F	-- 25 26 27 28 -- -- --	2345

Active Detectors <D Page>

Row		0 Detector #
0		
1	System Det. # 1	0
2	System Det. # 2	0
3	System Det. # 3	0
4	System Det. # 4	0
5	System Det. # 5	0
6	System Det. # 6	0
7	System Det. # 7	0
8	System Det. # 8	0

System Detectors <D Page>

Max ON (min)	5	D+A+E
Max OFF (min)	60	D+A+F

Detector Failure Monitor

Phase Number	0	F+C+1
Time Before Yellow	0.0	F+C+3

Advance Warning Beacon - Sign 1

Phase Number	0	F+D+1
Time Before Yellow	0.0	F+D+3

Advance Warning Beacon - Sign 2

Long Failure	0.5	F+0+6
Short Failure	0.5	F+0+7

Power Cycle Correction (Default = 0.5)

(These parameters are NOT downloaded.)

INTERSECTION: Ashton St. & Morena Bl.

223 Program

		Plan								
	Column # ---->	1	2	3	4	5	6	7	8	9
Row	Plan Name ---->									
0	Cycle Length									
1	Phase 1 - ForceOff									
2	Phase 2 - ForceOff									
3	Phase 3 - ForceOff									
4	Phase 4 - ForceOff									
5	Phase 5 - ForceOff									
6	Phase 6 - ForceOff									
7	Phase 7 - ForceOff									
8	Phase 8 - ForceOff									
9	Ring Offset									
A	Offset A									
B	Offset B									
C	Offset C									
D	Permissive									
E	Hold Release									
F	Ped Shift									

<C Page>

Coordination Timing By:
Implemented On:

FOR OBSERVATION ONLY

Master Plan	C + A + 2
Current Plan	C + A + 3
Next Plan	C + A + 4
T.O.D. Plan	C + A + 5
Master Cycle	C + A + 0
Ring A Cycle	C + B + 0
Ring B Cycle	C + D + 0
Min Cycle	C + A + E
Max Cycle	C + B + E

Row	Tim e	Plan	Offset	Day of Week
0				
1				
2				
3				
4				
5				
6				
7				
8				
9				
A				
B				
C				
D				
E				
F				

TOD Coordination

<9 Key with C+0+9=1>

	E	Row		F
		0	Free Lag	_2_4_6__
Plan 1		1	Plan 1 - Lag	_2_4_6__
Plan 2		2	Plan 2 - Lag	_2_4_6__
Plan 3		3	Plan 3 - Lag	_2_4_6__
Plan 4		4	Plan 4 - Lag	
Plan 5		5	Plan 5 - Lag	
Plan 6		6	Plan 6 - Lag	
Plan 7		7	Plan 7 - Lag	
Plan 8		8	Plan 8 - Lag	
Plan 9		9	Plan 9 - Lag	
Coord Ped*		A	Coord Max *	
NEMA Hold		B	Coord Lag *	
		C		
		D		
		E		
		F		

Sync Phases

C + E + FUNCTION #

Lag Phases <C Page>

C + F + FUNCTION #

Transition Type	0

TBC Transition
C + D + D

Plan Select
1 thru 9 = Coordination Plan 1 thru 9
14 or E = Free
15 or F = Flash

Transition Type
0 = Shortway
Non-zero = Lengthen

INTERSECTION: Clairemont Dr @ Denver St

223 [illegible] ogram

Group Assignment:
Field Master Assignment:

N/S Street Name: Denver
E/W Street Name: Clairemont

Last Database Change:
System Ref. Number:

N

Row	Column # --->	1	2	3	4	5	6	7	8
		Clairemont		Denver		Clairemont		Denver	
	Phase # --->	1	2	3	4	5	6	7	8
0	Ped Walk		7		7		7		7
1	Ped FDW		19		28		15		28
2	Min Green	4	10	4	4	4	10	4	4
3	Type 3 Limit								
4	Add/Veh								
5	Veh Extn	2.0	4.3	2.0	2.0	2.0	3.9	2.0	2.0
6	Max Gap	2.0	4.3	2.0	2.0	2.0	3.9	2.0	2.0
7	Min Gap	2.0	0.2	2.0	2.0	2.0	0.2	2.0	2.0
8	Max Limit	30	50	30	30	30	50	30	30
9	Max Limit 2								
A	Bus Adv								
B	Call to Phs								
C	Reduce By		0.1				0.1		
D	Every		0.7				0.8		
E	Yellow	3.4	4.1	3.4	3.9	3.4	4.9	3.4	3.9
F	Red Clear	1.0	1.0	1.0	1.0	1.0	1.0	1.0	1.0
	Grade								

Phase Timing - Bank 1
F + Phase + Row

<F Page>

	E
RR-1 Delay	
RR-1 Clear	
EV-A Delay	1
EV-A Clear	0
EV-B Delay	1
EV-B Clear	0
EV-C Delay	1
EV-C Clear	0
EV-D Delay	1
EV-D Clear	0
RR-2 Delay	
RR-2 Clear	
View EV Delay	---
View EV Clear	---
View RR Delay	---
View RR Clear	---

Preempt Timing
F + E + Row

Row		F
0	Permit	12345678
1	Red Lock	
2	Yellow Lock	
3	Min Recall	
4	Ped Recall	
5	Peds (View)	_2_4_6_8
6	Rest In Walk	
7	Red Rest	
8	Dbl Entry	
9	Max Recall	
A	Soft Recall	_2___6__
B	Max 2	
C	Cond Serv	
D	Ped Lock	12345678
E	Yellow Start	_2___6__
F	1st Phases	__3___7_

Phase Functions <F Page>
F + F + Row

Max Initial	0	F + 0 + E
Red Revert	5.0	F + 0 + F
All Red Start	0.0	F + C + O

Start / Revert Times

Drop Number		C + 0 + 0
Zone Number		C + 0 + 1
Area Number		C + 0 + 2
Area Address		C + 0 + 3
QuicNet Channel	DIGI58:	(QuicNet)

Communication Addresses

Overlap Timing

	Row	9 Green Clear	C Yellow Change	D Red Clear	0 Load-Switch #
Overlap A	A				
Overlap B	B				
Overlap C	C				
Overlap D	D				

<F Page>
F + COLOR +

<D Page>
D + 0 + OVERLAP

Manual Plan	0	C + A + 1
Manual Offset	0	C + B + 1

Manual Selection

Manual Plan
0 = Automatic
1-9 = Plan 1-9
14 = Free
15 = Flash

Manual Offset
0 = Automatic
1 = Offset A
2 = Offset B
3 = Offset C

C + F + O	F	Row
Free Lag	_2_4_6_8	0

Lag Phases <C Page>

Downtime Flash	255	(minutes)

Downtime Before Auto Manual Flash
F + 0 +8

Disable Ports	234

Disable Communication Ports
D + D + 9

Timing Sheet By: FLG
Approved By: FLG
Drawing Number:
Timing Implemented On:

pg. 1

Row	Time	Function	Day of Week	Column F Phases/Bits
0				
1				
2				
3				
4				
5				
6				
7				
8				
9				
A				
B				
C				
D				
E				
F				

TOD Function <D Page>

7 + ROW D + F + ROW

T.O.D. Functions
0 = Permitted Phases
1 = Red Lock
2 = Yellow Lock
3 = Veh Min Recall
4 = Ped Recall
5 =
6 = Rest In Walk
7 = Red Rest
8 = Double Entry
9 = Veh Max Recall
A = Veh Soft Recall
B = Maximum 2
C = Conditional Service
D = Free Lag Phases
E = Bit 1 - Local Override
Bit 2 - Phase Bank 2
Bit 3 - Phase Bank 3
Bit 4 - Disable Detector OFF Monitor
Bit 7 - Detector Count Monitor
Bit 8 - Real Time Split Monitor
F = Output Bits 1 thru 4

Row		F
0		
1	RR Overlap A - Phases	
2	RR Overlap B - Phases	
3	RR Overlap C - Phases	
4	RR Overlap D - Phases	
5	Ped 2P	_2_____
6	Ped 6P	____6__
7	Ped 4P	___4____
8	Ped 8P	_____8
9	Yellow Flash Phases	
A	Overlap A - Phases	
B	Overlap B - Phases	
C	Overlap C - Phases	
D	Overlap D - Phases	
E	Restricted Phases	
F	Assign 5 Outputs	

Configuration <E Page>

E + F + ROW

Day of Week

1 = Sunday
2 = Monday
3 = Tuesday
4 = Wednesday
5 = Thursday
6 = Friday
7 = Saturday

Row		E
0	Exclusive Phases	
1	RR-1 Clear Phases	
2	RR-2 Clear Phases	
3	RR-2 Limited Service	
4	Prot / Perm Phases	
5	Overlap A - Green Omit	
6	Overlap B - Green Omit	
7	Overlap C - Green Omit	
8	Overlap D - Green Omit	
9	Overlap Yellow Flash	
A	EV-A Phases	_2__5___
B	EV-B Phases	___4__7_
C	EV-C Phases	1____6__
D	EV-D Phases	__3____8
E	Extra 1 Config. Bits	1_345___
F	IC Select (Interconnect)	_2_____

Configuration

For access, set F + 9 + E = 1 E + E + ROW

Extra 1 Flags
1 = TBC Type 1
2 = NEMA Ext. Coord
3 = Auto Daylight Savings
4 = EV Advance
5 = Remote Download
6 = Special Event
7 = Pretimed Operation
8 = Split Ring Operation

IC Select Flags
1 =
2 = Modem
3 = 7-Wire Slave
4 = Flash / Free
5 =
6 = Simplex Master
7 = 7-Wire Master
8 = Offset Interrupter

Assign 5 Outputs
1 = Right Turn Overlap
2 = TOD Outputs
3 = EV Beacon - Steady
4 = EV Beacon - Flashing
5 = Special Event Outputs
6 = Phase 3 & 7 Ped
7 = Advanced Warning Sign
8 =

Time and Date

8-0 Hour, Minute, Day-of-Week
8-1 Day-of-Month, Year, Month
8-F Seconds

Disable Parity	0	D

Dial-Up Telephone Communications
(If set to a non-zero value, parity will be disabled)

Program Information

C + C + 0 = program
C + C + F = version

Remote Download

C + 0 + 4 = 1 -255
w/ E + E + E bit 5 on

P4-2

Row	1 Delay	3 Carry-over
0		
1		1.8
2		
3		
4		
5		
6		
7		
8		
9		
A		
B		
C		
D		
E	---	---
F	---	---

Detector Name	332 Input File	Detector Number
	1I1	14
	2I2U	1
	2I2L	5
	2I3U	21
	2I3L	25
	2I4	9
	3I5	16
	4I6U	3
	4I6L	7
	4I7U	23
	4I7L	27
	4I8	11
	1I9U	18
	3I9L	20
---	---	---
---	---	---

Row	2 Delay	4 Carry-over
0		
1		1.8
2		
3		
4		
5		
6		
7		
8		
9		
A		
B		
C		
D		
E	---	---
F	---	---

Detector Name	332 Input File	Detector Number
	5J1	13
	6J2U	2
	6J2L	6
	6J3U	22
	6J3L	26
	6J4	10
	7J5	15
	8J6U	4
	8J6L	8
	8J7U	24
	8J7L	28
	8J8	12
	5J9U	17
	7J9L	19
---	---	---
---	---	---

Detector Delay & Carryover <D Page>

D + X (across) + ROW

Row	Detector Numbers	E
A	1 2 3 4 5 6 7 8	12345678
B	9 10 11 12 -- -- -- --	1234
C	13 14 15 16 17 18 19 20	12345678
D	-- -- -- -- 21 22 23 24	5678
E	-- -- -- -- -- -- -- --	1234
F	-- 25 26 27 28 -- -- --	2345

Active Detectors <D Page>

Row		0 Detector #
0		
1	System Det. # 1	0
2	System Det. # 2	0
3	System Det. # 3	0
4	System Det. # 4	0
5	System Det. # 5	0
6	System Det. # 6	0
7	System Det. # 7	0
8	System Det. # 8	0

System Detectors <D Page>

Max ON (min)	5	D+A+E
Max OFF (min)	60	D+A+F

Detector Failure Monitor

Phase Number	0	F+C+1
Time Before Yellow	0.0	F+C+3

Advance Warning Beacon - Sign 1

Phase Number	0	F+D+1
Time Before Yellow	0.0	F+D+3

Advance Warning Beacon - Sign 2

Long Failure	0.5	F+0+6
Short Failure	0.5	F+0+7

Power Cycle Correction (Default = 0.5)

INTERSECTION: Clairemont Dr @ Denver St 223 Prog

Coordination Timing By:
Implemented On:

Row	Column # --->	Plan 1	2	3	4	5	6	7	8	9
	Plan Name --->				AM					
0	Cycle Length	116	116		100					
1	Phase 1 - ForceOff	83	83		15					
2	Phase 2 - ForceOff	0	0		0					
3	Phase 3 - ForceOff	28	68		76					
4	Phase 4 - ForceOff	68	40		45					
5	Phase 5 - ForceOff	79	79		15					
6	Phase 6 - ForceOff	0	0		0					
7	Phase 7 - ForceOff	14	14		30					
8	Phase 8 - ForceOff	68	68		76					
9	Ring Offset									
A	Offset A	0	0		0					
B	Offset B									
C	Offset C									
D	Permissive	12	12		12					
E	Hold Release	255	255		255					
F	Ped Shift	0	0		0					

Coordination <C Page>

C + Plan + ROW

FOR OBSERVATION ONLY

Master Plan	C + A + 2
Current Plan	C + A + 3
Next Plan	C + A + 4
T.O.D. Plan	C + A + 5
Master Cycle	C + A + 0
Ring A Cycle	C + B + 0
Ring B Cycle	C + D + 0
Min Cycle	C + A + E
Max Cycle	C + B + E

Row	Time	Plan	Offset	Day of Week
0	07:00	4	A	_23456_
1	09:00	E	A	1234567
2				
3				
4				
5				
6				
7				
8				
9				
A				
B				
C				
D				
E				
F				

TOD Coordination

<9 Key with C+0+9=1>

	E	Row		F
		0	Free Lag	_2_4_6_8
Plan 1	_2__6__	1	Plan 1 - Lag	_2_4_6_8
Plan 2	_2__6__	2	Plan 2 - Lag	_23__6_8
6		3	Plan 3 - Lag	
Plan 4	_2__6__	4	Plan 4 - Lag	1_3_5__8
Plan 5		5	Plan 5 - Lag	
Plan 6		6	Plan 6 - Lag	
Plan 7		7	Plan 7 - Lag	
Plan 8		8	Plan 8 - Lag	
Plan 9		9	Plan 9 - Lag	
Coord Ped*		A	Coord Max *	
NEMA Hold		B	Coord Lag *	
		C		
		D		
		E		
		F		

Sync Phases C + E + FUNCTION #

Lag Phases <C Page> C + F + FUNCTION #

Transition Type	0

TBC Transition
C + D + D

Transition Type
0 = Shortway
Non-zero = Lengthen

Plan Select
1 thru 9 = Coordination Plan 1 thru 9
14 or E = Free
15 or F = Flash

P4.4

223 Program

INTERSECTION: COLUSA St & FRIARS Rd

Group Assignment:
Field Master Assignment:

N/S Street Name: COLUSA St
E/W Street Name: FRIARS Rd

Last Database Change:
System Ref. Number:

N

Row	Column # ---->	1	2	3	4	5	6	7	8
		FRIARS			COLUSA		FRIARS		COLUSA
	Phase # ---->	1	2	3	4	5	6	7	8
0	Ped Walk		7		7		7		
1	Ped FDW		17		24		9		
2	Min Green	4	10		4	4	10		4
3	Type 3 Limit								
4	Add/Veh								
5	Veh Extn	2.0	6.1		2.0	2.0	6.4		2.0
6	Max Gap	2.0	6.1		2.0	2.0	6.4		2.0
7	Min Gap	2.0	0.2		2.0	2.0	0.2		2.0
8	Max Limit	30	60		40	30	60		40
9	Max Limit 2								
A	Bus Adv								
B	Call to Phs								
C	Reduce By		0.1				0.1		
D	Every		0.5				0.5		
E	Yellow	3.4	4.7		3.9	3.4	5.0		3.9
F	Red Clear	1.0	1.0		1.0	1.0	1.0		1.0
	Grade								

Phase Timing - Bank 1
F + Phase + Row

<F Page>

	E
RR-1 Delay	
RR-1 Clear	
EV-A Delay	0
EV-A Clear	0
EV-B Delay	
EV-B Clear	
EV-C Delay	0
EV-C Clear	0
EV-D Delay	
EV-D Clear	
RR-2 Delay	
RR-2 Clear	
View EV Delay	---
View EV Clear	---
View RR Delay	---
View RR Clear	---

Preempt Timing
F + E + Row

Row		F
0	Permit	12_456_8
1	Red Lock	
2	Yellow Lock	
3	Min Recall	
4	Ped Recall	
5	Peds (View)	_2_4_6__
6	Rest In Walk	
7	Red Rest	
8	Dbl Entry	___4___8
9	Max Recall	
A	Soft Recall	_2___6__
B	Max 2	
C	Cond Serv	
D	Ped Lock	12345678
E	Yellow Start	_2___6__
F	1st Phases	___4___8

Phase Functions <F Page>
F + F + Row

Max Initial	0
Red Revert	5.0
All Red Start	0.0

F + 0 + E
F + 0 + F
F + C + O

Start / Revert Times

Drop Number	5	C + 0 + 0
Zone Number	5	C + 0 + 1
Area Number	5	C + 0 + 2
Area Address	82	C + 0 + 3
QuicNet Channel	DIGI 47:	(QuicNet)

Communication Addresses

Overlap Timing

	Row	9 Green Clear	C Yellow Change	D Red Clear	0 Load-Switch #
Overlap A	A				
Overlap B	B				
Overlap C	C				
Overlap D	D				

<F Page>
F + COLOR +

<D Page>
D + 0 + OVERLAP

Manual Plan	14
Manual Offset	0

C + A + 1
C + B + 1

Manual Selection

Manual Plan
0 = Automatic
1-9 = Plan 1-9
14 = Free
15 = Flash

Manual Offset
0 = Automatic
1 = Offset A
2 = Offset B
3 = Offset C

C + F + O

	F	Row
Free Lag	_2_4_6_8	0

Lag Phases <C Page>

Downtime Flash	255	(minutes)

Downtime Before Auto Manual Flash
F + 0 +8

Disable Ports	234

Disable Communication Ports
D + D + 9

Timing Sheet By: WXW
Approved By: EFF
Drawing Number:
Timing Implemented On: 2/24/05

INTERSECTION: COLUSA St & FRIARS Rd

223 Program

Row	Time	Function	Day of Week	Column F Phases/Bits
0				
1				
2				
3				
4				
5				
6				
7				
8				
9				
A				
B				
C				
D				
E				
F				

TOD Function

7 + ROW

<D Page>

D + F + ROW

T.O.D. Functions
0 = Permitted Phases
1 = Red Lock
2 = Yellow Lock
3 = Veh Min Recall
4 = Ped Recall
5 =
6 = Rest In Walk
7 = Red Rest
8 = Double Entry
9 = Veh Max Recall
A = Veh Soft Recall
B = Maximum 2
C = Conditional Service
D = Free Lag Phases
E = Bit 1 - Local Override
Bit 2 - Phase Bank 2
Bit 3 - Phase Bank 3
Bit 4 - Disable Detector OFF Monitor
Bit 7 - Detector Count Monitor
Bit 8 - Real Time Split Monitor
F = Output Bits 1 thru 4

Row		F
0		
1	RR Overlap A - Phases	
2	RR Overlap B - Phases	
3	RR Overlap C - Phases	
4	RR Overlap D - Phases	
5	Ped 2P	_2_____
6	Ped 6P	____6__
7	Ped 4P	___4___
8	Ped 8P	
9	Yellow Flash Phases	
A	Overlap A - Phases	
B	Overlap B - Phases	
C	Overlap C - Phases	
D	Overlap D - Phases	
E	Restricted Phases	
F	Assign 5 Outputs	

Configuration

E + F + ROW

<E Page>

Row		E
0	Exclusive Phases	
1	RR-1 Clear Phases	
2	RR-2 Clear Phases	
3	RR-2 Limited Service	
4	Prot / Perm Phases	
5	Overlap A - Green Omit	
6	Overlap B - Green Omit	
7	Overlap C - Green Omit	
8	Overlap D - Green Omit	
9	Overlap Yellow Flash	
A	EV-A Phases	_2__5___
B	EV-B Phases	
C	EV-C Phases	1____6__
D	EV-D Phases	
E	Extra 1 Config. Bits	1_345___
F	IC Select (Interconnect)	_2_____

For access, set F + 9 + E = 1

Configuration

E + E + ROW

Extra 1 Flags
1 = TBC Type 1
2 = NEMA Ext. Coord
3 = Auto Daylight Savings
4 = EV Advance
5 = Remote Download
6 = Special Event
7 = Pretimed Operation
8 = Split Ring Operation

IC Select Flags
1 =
2 = Modem
3 = 7-Wire Slave
4 = Flash / Free
5 =
6 = Simplex Master
7 = 7-Wire Master
8 = Offset Interrupter

Day of Week

1 = Sunday
2 = Monday
3 = Tuesday
4 = Wednesday
5 = Thursday
6 = Friday
7 = Saturday

Assign 5 Outputs
1 = Right Turn Overlap
2 = TOD Outputs
3 = EV Beacon - Steady
4 = EV Beacon - Flashing
5 = Special Event Outputs
6 = Phase 3 & 7 Ped
7 = Advanced Warning Sign
8 =

Time and Date

8-0 Hour, Minute, Day-of-Week
8-1 Day-of-Month, Year, Month
8-F Seconds

Disable Parity	0	D+B+0

Dial-Up Telephone Communications

(If set to a non-zero value, parity will be disabled)

Program Information

C + C + 0 = program
C + C + F = version

Remote Download

C + 0 + 4 = 1 -255
w/ E + E + E bit 5 on

INTERSECTION: COLUSA St & FRIARS Rd

223 Program

Row	1 Delay	3 Carry-over
0		
1		1.8
2		
3		
4		
5		
6		
7		
8	10.0	
9		
A		
B		
C		
D		
E	---	---
F	---	---

Detector Name	332 Input File	Detector Number
	1I1	14
	2I2U	1
	2I2L	5
	2I3U	21
	2I3L	25
	2I4	9
	3I5	16
	4I6U	3
	4I6L	7
	4I7U	23
	4I7L	27
	4I8	11
	1I9U	18
	3I9L	20
---	---	---
---	---	---

Row	2 Delay	4 Carry-over
0		
1		1.8
2		
3		
4		
5		
6		
7		
8	10.0	
9		
A		
B		
C		
D		
E	---	---
F	---	---

Detector Delay & Carryover <D Page>

Detector Name	332 Input File	Detector Number
	5J1	13
	6J2U	2
	6J2L	6
	6J3U	22
	6J3L	26
	6J4	10
	7J5	15
	8J6U	4
	8J6L	8
	8J7U	24
	8J7L	28
	8J8	12
	5J9U	17
	7J9L	19
---	---	---
---	---	---

Row	Detector Numbers	E
A	1 2 3 4 5 6 7 8	12345678
B	9 10 11 12 -- -- -- --	1234
C	13 14 15 16 17 18 19 20	12345678
D	-- -- -- -- 21 22 23 24	5678
E	-- -- -- -- -- -- -- --	1234
F	-- 25 26 27 28 -- -- --	2345

Active Detectors <D Page>

Row		0 Detector #
0		
1	System Det. # 1	0
2	System Det. # 2	0
3	System Det. # 3	0
4	System Det. # 4	0
5	System Det. # 5	0
6	System Det. # 6	0
7	System Det. # 7	0
8	System Det. # 8	0

System Detectors <D Page>

Max ON (min)	5	D+A+E
Max OFF (min)	60	D+A+F

Detector Failure Monitor

Phase Number	0	F+C+1
Time Before Yellow	0.0	F+C+3

Advance Warning Beacon - Sign 1

Phase Number	0	F+D+1
Time Before Yellow	0.0	F+D+3

Advance Warning Beacon - Sign 2

Long Failure	0.5	F+0+6
Short Failure	0.5	F+0+7

Power Cycle Correction (Default = 0.5)

223 F ram

NTERSECTION: E. Mission Bay Dr/ Pacific Highway @ Sc orld Dr

Group Assignment:
Field Master Assignment:

N/S Street Name: Sea World Dr
E/W Street Name: E. Mission Bay Dr/ Pacific Highway

Last Database Change:
System Ref. Number:

N

Row	Column # ---> / Phase # --->	1	2	3	4	5	6	7	8
		Sea World		E. Mission Bay		Phase	Sea World		Pacific Highway
0	Ped Walk		7		7		7		7
1	Ped FDW		22		24		27		22
2	Min Green	4	10	4	4	4	10	4	4
3	Type 3 Limit								
4	Add/Veh								
5	Veh Extn	2.0	4.4	2.0	3.0	2.0	4.2	2.0	2.0
6	Max Gap	2.0	4.4	2.0	3.0	2.0	4.2	2.0	2.0
7	Min Gap	2.0	0.2	2.0	3.0	2.0	0.2	2.0	2.0
8	Max Limit	30	70	30	30	30	70	30	30
9	Max Limit 2								
A	Bus Adv								
B	Call to Phs						0.1		
C	Reduce By		0.1				0.7		
D	Every		0.7						
E	Yellow	3.4	4.3	3.4	4.1	3.4	4.2	3.4	4.5
F	Red Clear	1.0	1.0	1.0	1.0	1.0	1.0	1.0	1.0

Phase Timing - Bank 1
F + Phase + Row

<F Page>

	E
RR-1 Delay	
RR-1 Clear	
EV-A Delay	0
EV-A Clear	0
EV-B Delay	0
EV-B Clear	0
EV-C Delay	0
EV-C Clear	0
EV-D Delay	0
EV-D Clear	0
RR-2 Delay	
RR-2 Clear	
View EV Delay	---
View EV Clear	---
View RR Delay	---
View RR Clear	---

Preempt Timing
F + E + Row

Row		F
0	Permit	12345678
1	Red Lock	
2	Yellow Lock	
3	Min Recall	
4	Ped Recall	
5	Peds (View)	_2_4_6_8
6	Rest In Walk	
7	Red Rest	
8	Dbl Entry	
9	Max Recall	
A	Soft Recall	_2___6__
B	Max 2	
C	Cond Serv	
D	Ped Lock	12345678
E	Yellow Start	_2___6__
F	1st Phases	__3___7_

Phase Functions <F Page>
F + F + Row

Max Initial	0
Red Revert	5.0
All Red Start	0.0

F + 0 + E
F + 0 + F
F + C + O

Start / Revert Times

Drop Number	2	C + 0 + 0
Zone Number	2	C + 0 + 1
Area Number	5	C + 0 + 2
Area Address	85	C + 0 + 3
QuicNet Channel	COM52	(QuicNet)

Communication Addresses

Overlap Timing

	Row	9 Green Clear	C Yellow Change	D Red Clear	0 Load-Switch #
Overlap A	A				
Overlap B	B				
Overlap C	C				
Overlap D	D				

<F Page>
F + COLOR +

<D Page>
D + 0 + OVERLAP

Manual Plan	14	C + A + 1
Manual Offset	0	C + B + 1

Manual Selection

Manual Plan
0 = Automatic
1-9 = Plan 1-9
14 = Free
15 = Flash

Manual Offset
0 = Automatic
1 = Offset A
2 = Offset B
3 = Offset C

C + F + O

	F	Row
Free Lag	_2_4_6_8	0

Lag Phases <C Page>

Downtime Flash	255	(minutes)

Downtime Before Auto Manual Flash
F + 0 +8

Disable Ports	_234_

Disable Communication Ports
D + D + 9

Timing Sheet By: KT
Approved By: FLG
Drawing Number: 19078-D-7
Timing Implemented On:

INTERSECTION: E. Mission Bay Dr/ Pacific Highway Sea World Dr

223 Program

Row	Time	Function	Day of Week	Column F Phases/Bits
0	:			
1	:			
2	:			
3	:			
4	:			
5	:			
6	:			
7	:			
8	:			
9	:			
A	:			
B	:			
C	:			
D	:			
E	:			
F	:			

TOD Function

7 + ROW

<D Page>

D + F + ROW

T.O.D. Functions
0 = Permitted Phases
1 = Red Lock
2 = Yellow Lock
3 = Veh Min Recall
4 = Ped Recall
5 =
6 = Rest In Walk
7 = Red Rest
8 = Double Entry
9 = Veh Max Recall
A = Veh Soft Recall
B = Maximum 2
C = Conditional Service
D = Free Lag Phases
E = Bit 1 - Local Override
Bit 2 - Phase Bank 2
Bit 3 - Phase Bank 3
Bit 4 - Disable Detector OFF Monitor
Bit 7 - Detector Count Monitor
Bit 8 - Real Time Split Monitor
F = Output Bits 1 thru 4

Row		F
0		
1	RR Overlap A - Phases	
2	RR Overlap B - Phases	
3	RR Overlap C - Phases	
4	RR Overlap D - Phases	
5	Ped 2P	_2_____
6	Ped 6P	_____6__
7	Ped 4P	___4____
8	Ped 8P	_____8
9	Yellow Flash Phases	
A	Overlap A - Phases	_23_____
B	Overlap B - Phases	_____67_
C	Overlap C - Phases	
D	Overlap D - Phases	
E	Restricted Phases	
F	Assign 5 Outputs	1_____

Configuration

E + F + ROW

<E Page>

Row		E
0	Exclusive Phases	
1	RR-1 Clear Phases	
2	RR-2 Clear Phases	
3	RR-2 Limited Service	
4	Prot / Perm Phases	
5	Overlap A - Green Omit	_2_____
6	Overlap B - Green Omit	_____6__
7	Overlap C - Green Omit	
8	Overlap D - Green Omit	
9	Overlap Yellow Flash	
A	EV-A Phases	_2__5___
B	EV-B Phases	___4__7_
C	EV-C Phases	1___6__
D	EV-D Phases	__3_____8
E	Extra 1 Config. Bits	1_345___
F	IC Select (Interconnect)	_2_____

For access, set F + 9 + E = 1

Configuration

E + E + ROW

Extra 1 Flags
1 = TBC Type 1
2 = NEMA Ext. Coord
3 = Auto Daylight Savings
4 = EV Advance
5 = Remote Download
6 = Special Event
7 = Preltimed Operation
8 = Split Ring Operation

IC Select Flags
1 =
2 = Modem
3 = 7-Wire Slave
4 = Flash / Free
5 =
6 = Simplex Master
7 = 7-Wire Master
8 = Offset Interrupter

Day of Week

1 = Sunday
2 = Monday
3 = Tuesday
4 = Wednesday
5 = Thursday
6 = Friday
7 = Saturday

Assign 5 Outputs
1 = Right Turn Overlap
2 = TOD Outputs
3 = EV Beacon - Steady
4 = EV Beacon - Flashing
5 = Special Event Outputs
6 = Phase 3 & 7 Ped
7 = Advanced Warning Sign
8 =

Time and Date
8-0 Hour, Minute, Day-of-Week
8-1 Day-of-Month, Year, Month
8-F Seconds

Disable Parity	0	D+B+0

Dial-Up Telephone Communications
(If set to a non-zero value, parity will be disabled)

Program Information
C + C + 0 = program
C + C + F = version

Remote Download
C + 0 + 4 = 1 -255
w/ E + E + E bit 5 on

Printed on 7/19/2012 3:18 PM

INTERSECTION: E. Mission Bay Dr/ Pacific Highway / Sea World Dr — 223 Program

Row	1 Delay	3 Carry-over
0		
1		1.8
2		
3		
4		
5		
6		
7	10.0	
8		
9		
A		
B		
C		
D		
E	---	---
F	---	---

Detector Name	332 Input File	Detector Number
	1I1	14
	2I2U	1
	2I2L	5
	2I3U	21
	2I3L	25
	2I4	9
	3I5	16
	4I6U	3
	4I6L	7
	4I7U	23
	4I7L	27
	4I8	11
	1I9U	18
	3I9L	20
---	---	---
---	---	---

Row	2 Delay	4 Carry-over
0		
1		1.8
2		
3		
4		
5		
6		
7	10.0	
8		
9		
A		
B		
C		
D		
E	---	---
F	---	---

Detector Name	332 Input File	Detector Number
	5J1	13
	6J2U	2
	6J2L	6
	6J3U	22
	6J3L	26
	6J4	10
	7J5	15
	8J6U	4
	8J6L	8
	8J7U	24
	8J7L	28
	8J8	12
	5J9U	17
	7J9L	19
---	---	---
---	---	---

Detector Delay & Carryover <D Page>

D + X (across) + ROW

Row	Detector Numbers	E
A	1 2 3 4 5 6 7 8	12345678
B	9 10 11 12 -- -- -- --	1234____
C	13 14 15 16 17 18 19 20	12345678
D	-- -- -- -- 21 22 23 24	____5678
E	-- -- -- -- -- -- -- --	1234____
F	-- 25 26 27 28 -- -- --	_2345___

Active Detectors <D Page>

Row		0 Detector #
0		
1	System Det. # 1	
2	System Det. # 2	
3	System Det. # 3	
4	System Det. # 4	
5	System Det. # 5	
6	System Det. # 6	
7	System Det. # 7	
8	System Det. # 8	

System Detectors <D Page>

Max ON (min)	5	D+A+E
Max OFF (min)	60	D+A+F

Detector Failure Monitor

Phase Number	0	F+C+1
Time Before Yellow	0.0	F+C+3

Advance Warning Beacon - Sign 1

Phase Number	0	F+D+1
Time Before Yellow	0.0	F+D+3

Advance Warning Beacon - Sign 2

Long Failure	0.5	F+0+6
Short Failure	0.5	F+0+7

Power Cycle Correction (Default = 0.5)

INTERSECTION: FRIARS RD @ NAPA ST

223 Program

Group Assignment:
Field Master Assignment:

N/S Street Name: NAPA
E/W Street Name: FRIARS

Row	Column # --->	1	2	3	4	5	6	7	8
			FRIARS	PED	NAPA		FRIARS		
	Phase # --->		2	3	4	5	6		
					4+6				
0	Ped Walk		7	7			7		
1	Ped FDW		17	20			20		
2	Min Green		7	4	4	4	7		
3	Type 3 Limit								
4	Add/Veh								
5	Veh Extn		4.6	0.0	5.0	2.0	4.2		
6	Max Gap		4.6	0.0	5.0	2.0	4.2		
7	Min Gap		0.2	0.0	0.2	2.0	0.2		
8	Max Limit		30	0	20	30	30		
9	Max Limit 2		40		40		40		
A	Bus Adv								
B	Call to Phs								
C	Reduce By		0.1		0.1		0.1		
D	Every		0.7		0.6		0.8		
E	Yellow		5.0	3.0	3.9	3.4	4.6		
F	Red Clear		1.0		1.0	1.0	1.0		

Phase Timing - Bank 1
F + Phase + Row

<F Page>

	E
RR-1 Delay	
RR-1 Clear	
EV-A Delay	0
EV-A Clear	0
EV-B Delay	0
EV-B Clear	0
EV-C Delay	0
EV-C Clear	0
EV-D Delay	
EV-D Clear	
RR-2 Delay	
RR-2 Clear	
View EV Delay	---
View EV Clear	---
View RR Delay	---
View RR Clear	---

F + E + Row

	F	Row
Permit	_23456__	0
Red Lock		1
Yellow Lock		2
Min Recall	_2___6__	3
Ped Recall		4
Peds (View)	_23__6__	5
Rest In Walk		6
Red Rest		7
Dbl Entry		8
Max Recall		9
Soft Recall		A
Max 2		B
Cond Serv		C
Ped Lock	12345678	D
Yellow Start	_2___6__	E
1st Phases	___4____	F

F + F + Row

Max Initial	0	F + 0 + E
Red Revert	5.0	F + 0 + F
All Red Start	0.0	F + C + O

Start / Revert Times

Drop Number	4	C + 0 + 0
Zone Number	4	C + 0 + 1
Area Number	5	C + 0 + 2
Area Address	81	C + 0 + 3
QuicNet Channel	COM 51	(QuicNet)

Communication Addresses

C + F + O	F	Row
Free Lag	_23__6__	0

Lag Phases <C Page>

Overlap Timing

	Row	9 Green Clear	C Yellow Change	D Red Clear	0 Load-Switch #
Overlap A	A				
Overlap B	B				
Overlap C	C				
Overlap D	D				

<F Page> F + COLOR +

<D Page> D + 0 + OVERLAP

Manual Plan	14	C + A + 1
Manual Offset	0	C + B + 1

Manual Selection

Manual Plan
0 = Automatic
1-9 = Plan 1-9
14 = Free
15 = Flash

Manual Offset
0 = Automatic
1 = Offset A
2 = Offset B
3 = Offset C

Downtime Flash	255	(minutes)

Downtime Before Auto Manual Flash
F + 0 +8

Disable Ports	_234____

Disable Communication Ports
D + D + 9

Timing Sheet By: M2S
Approved By: FLG
Drawing Number: 26904-82-D
Timing Implemented On: 05/03/10

INTERSECTION: FRIARS RD @ NAPA ST

223 Program

Row	Time	Function	Day of Week	Column F Phases/Bits
0	16 : 00	B	_23456_	_2_4_6_
1	18 : 30	B	_23456_	
2	00 : 01	E	1234567	1_____
3				
4				
5				
6				
7				
8				
9				
A				
B				
C				
D				
E				
F				

TOD Function

7 + ROW

<D Page>

D + F + ROW

T.O.D. Functions
0 = Permitted Phases
1 = Red Lock
2 = Yellow Lock
3 = Veh Min Recall
4 = Ped Recall
5 =
6 = Rest In Walk
7 = Red Rest
8 = Double Entry
9 = Veh Max Recall
A = Veh Soft Recall
B = Maximum 2
C = Conditional Service
D = Free Lag Phases
E = Bit 1 - Local Override
Bit 2 - Phase Bank 2
Bit 3 - Phase Bank 3
Bit 4 - Disable Detector OFF Monitor
Bit 7 - Detector Count Monitor
Bit 8 - Real Time Split Monitor
F = Output Bits 1 thru 4

Row		F
0		
1	RR Overlap A - Phases	
2	RR Overlap B - Phases	
3	RR Overlap C - Phases	
4	RR Overlap D - Phases	
5	Ped 2P	_2_____
6	Ped 6P	_____6__
7	Ped 4P	
8	Ped 8P	__3_____
9	Yellow Flash Phases	
A	Overlap A - Phases	__4_6__
B	Overlap B - Phases	
C	Overlap C - Phases	
D	Overlap D - Phases	
E	Restricted Phases	
F	Assign 5 Outputs	1_____

Configuration

<E Page>

E + F + ROW

Day of Week

1 = Sunday
2 = Monday
3 = Tuesday
4 = Wednesday
5 = Thursday
6 = Friday
7 = Saturday

Assign 5 Outputs
1 = Right Turn Overlap
2 = TOD Outputs
3 = EV Beacon - Steady
4 = EV Beacon - Flashing
5 = Special Event Outputs
6 = Phase 3 & 7 Ped
7 = Advanced Warning Sign
8 = Bus Advance

Row		E
0	Exclusive Phases	
1	RR-1 Clear Phases	
2	RR-2 Clear Phases	
3	RR-2 Limited Service	
4	Prot / Perm Phases	
5	Overlap A - Green Omit	_____6__
6	Overlap B - Green Omit	
7	Overlap C - Green Omit	
8	Overlap D - Green Omit	
9	Overlap Yellow Flash	
A	EV-A Phases	_2__5___
B	EV-B Phases	___4____
C	EV-C Phases	_____6__
D	EV-D Phases	
E	Extra 1 Config. Bits	1_345___
F	IC Select (Interconnect)	_2_____

For access, set F + 9 + E = 1

Configuration

E + E + ROW

Extra 1 Flags
1 = TBC Type 1
2 = NEMA Ext. Coord
3 = Auto Daylight Savings
4 = EV Advance
5 = Remote Download
6 = Special Event
7 = Pretimed Operation
8 = Split Ring Operation

IC Select Flags
1 =
2 = Modem
3 = 7-Wire Slave
4 = Flash / Free
5 =
6 = Simplex Master
7 = 7-Wire Master
8 = Offset Interrupter

Time and Date

8-0 Hour, Minute, Day-of-Week
8-1 Day-of-Month, Year, Month
8-F Seconds

Disable Parity	0	D+B+0

Dial-Up Telephone Communications

(If set to a non-zero value, parity will be disabled)

Program Information

C + C + 0 = program
C + C + F = version

Remote Download

C + 0 + 4 = 1 -255
w/ E + E + E bit 5 on

Row	1 Delay	3 Carry-over
0		
1		1.8
2		
3		
4		
5		
6		
7		1.8
8		
9		
A		
B		
C		
D		
E	---	---
F	---	---

Detector Name	332 Input File	Detector Number
	1I1	14
	2I2U	1
	2I2L	5
	2I3U	21
	2I3L	25
	2I4	9
	3I5	16
	4I6U	3
	4I6L	7
	4I7U	23
	4I7L	27
	4I8	11
	1I9U	18
	3I9L	20
---	---	---
---	---	---

Row	2 Delay	4 Carry-over
0		
1		1.8
2		
3		
4		
5		
6		
7		
8		
9		
A		
B		
C		
D		
E	---	---
F	---	---

Detector Name	332 Input File	Detector Number
	5J1	13
	6J2U	2
	6J2L	6
	6J3U	22
	6J3L	26
	6J4	10
	7J5	15
	8J6U	4
	8J6L	8
	8J7U	24
	8J7L	28
	8J8	12
	5J9U	17
	7J9L	19
---	---	---
---	---	---

Detector Delay & Carryover <D Page>

D + X (across) + ROW

Row	Detector Numbers	E
A	1 2 3 4 5 6 7 8	12345678
B	9 10 11 12 -- -- -- --	1234____
C	13 14 15 16 17 18 19 20	12345678
D	-- -- -- -- 21 22 23 24	____5678
E	-- -- -- -- -- -- -- --	1234____
F	-- 25 26 27 28 -- -- --	_2345___

Active Detectors <D Page>

Row		0 Detector #
0		
1	System Det. # 1	
2	System Det. # 2	
3	System Det. # 3	
4	System Det. # 4	
5	System Det. # 5	
6	System Det. # 6	
7	System Det. # 7	
8	System Det. # 8	

System Detectors <D Page>

Max ON (min)	5	D+A+E
Max OFF (min)	60	D+A+F

Detector Failure Monitor

Phase Number		F+C+1
Time Before Yellow		F+C+3

Advance Warning Beacon - Sign 1

Phase Number		F+D+1
Time Before Yellow		F+D+3

Advance Warning Beacon - Sign 2

Long Failure	0.5	F+0+6
Short Failure	0.5	F+0+7

Power Cycle Correction (Default = 0.5)

INTERSECTION: Sea World Dr @ Friars Rd

223 Pro m

Group Assignment:
Field Master Assignment:

N/S Street Name: Friars
E/W Street Name: Sea World

Last Database Change:
System Ref. Number:

Row	Column # --->	1	2	3	4	5	6	7	8
	Phase # --->	1	2	3	4	5	6	7	8
		Sea World					Sea World		Friars
0	Ped Walk		7						7
1	Ped FDW		21						20
2	Min Green	4	7				7		4
3	Type 3 Limit								
4	Add/Veh								
5	Veh Extn	2.0	4.0				5.2		2.0
6	Max Gap	2.0	4.0				5.2		2.0
7	Min Gap	2.0	0.2				0.2		2.0
8	Max Limit	30	60				60		40
9	Max Limit 2								
A	Bus Adv								
B	Call to Phs								
C	Reduce By		0.1				0.1		
D	Every		0.8				0.6		
E	Yellow	3.4	5.2				4.4		5.2
F	Red Clear	1.0	1.0				1.0		1.0
	Grade								

Phase Timing - Bank 1
F + Phase + Row

<F Page>

	E
RR-1 Delay	
RR-1 Clear	
EV-A Delay	
EV-A Clear	
EV-B Delay	
EV-B Clear	
EV-C Delay	
EV-C Clear	
EV-D Delay	
EV-D Clear	
RR-2 Delay	
RR-2 Clear	
View EV Delay	---
View EV Clear	---
View RR Delay	---
View RR Clear	---

Preempt Timing
F + E + Row

	F	Row
Permit	12___6_8	0
Red Lock		1
Yellow Lock		2
Min Recall	_2___6__	3
Ped Recall		4
Peds (View)	_2____8	5
Rest In Walk		6
Red Rest		7
Dbl Entry		8
Max Recall		9
Soft Recall		A
Max 2		B
Cond Serv		C
Ped Lock	12345678	D
Yellow Start	_2___6__	E
1st Phases	_____8	F

Phase Functions <F Page>
F + F + Row

Max Initial	0	F + 0 + E
Red Revert	5.0	F + 0 + F
All Red Start	0.0	F + C + O

Start / Revert Times

Drop Number		C + 0 + 0
Zone Number		C + 0 + 1
Area Number		C + 0 + 2
Area Address		C + 0 + 3
QuicNet Channel		(QuicNet)

Communication Addresses

C + F + O	F	Row
Free Lag	_2___6_8	0

Lag Phases <C Page>

Overlap Timing

	Row	9 Green Clear	C Yellow Change	D Red Clear	0 Load-Switch #
Overlap A	A				
Overlap B	B				
Overlap C	C				
Overlap D	D				

<F Page>
F + COLOR +

<D Page>
D + 0 + OVERLAP

Manual Plan	14	C + A + 1
Manual Offset	0	C + B + 1

Manual Selection

Manual Plan
0 = Automatic
1-9 = Plan 1-9
14 = Free
15 = Flash

Manual Offset
0 = Automatic
1 = Offset A
2 = Offset B
3 = Offset C

Downtime Flash	255	(minutes)

Downtime Before Auto Manual Flash
F + 0 + 8

Disable Ports	_234____

Disable Communication Ports
D + D + 9

Timing Sheet By: FLG
Approved By: EFF
Drawing Number:
Timing Implemented On:

INTERSECTION: Sea World Dr @ Friars Rd

223 P[illegible]ram

Row	Time	Function	Day of Week	Column F Phases/Bits
0				
1				
2				
3				
4				
5				
6				
7				
8				
9				
A				
B				
C				
D				
E				
F				

TOD Function

7 + ROW

<D Page>

D + F + ROW

T.O.D. Functions
0 = Permitted Phases
1 = Red Lock
2 = Yellow Lock
3 = Veh Min Recall
4 = Ped Recall
5 =
6 = Rest In Walk
7 = Red Rest
8 = Double Entry
9 = Veh Max Recall
A = Veh Soft Recall
B = Maximum 2
C = Conditional Service
D = Free Lag Phases
E = Bit 1 - Local Override
Bit 2 - Phase Bank 2
Bit 3 - Phase Bank 3
Bit 4 - Disable Detector OFF Monitor
Bit 7 - Detector Count Monitor
Bit 8 - Real Time Split Monitor
F = Output Bits 1 thru 4

Row		F
0		
1	RR Overlap A - Phases	
2	RR Overlap B - Phases	
3	RR Overlap C - Phases	
4	RR Overlap D - Phases	
5	Ped 2P	2
6	Ped 6P	
7	Ped 4P	
8	Ped 8P	8
9	Yellow Flash Phases	
A	Overlap A - Phases	8
B	Overlap B - Phases	
C	Overlap C - Phases	
D	Overlap D - Phases	
E	Restricted Phases	
F	Assign 5 Outputs	1

Configuration

E + F + ROW

<E Page>

Day of Week

1 = Sunday
2 = Monday
3 = Tuesday
4 = Wednesday
5 = Thursday
6 = Friday
7 = Saturday

Row		E
0	Exclusive Phases	
1	RR-1 Clear Phases	
2	RR-2 Clear Phases	
3	RR-2 Limited Service	
4	Prot / Perm Phases	
5	Overlap A - Green Omit	
6	Overlap B - Green Omit	
7	Overlap C - Green Omit	
8	Overlap D - Green Omit	
9	Overlap Yellow Flash	
A	EV-A Phases	
B	EV-B Phases	
C	EV-C Phases	
D	EV-D Phases	
E	Extra 1 Config. Bits	1_34
F	IC Select (Interconnect)	2

For access, set F + 9 + E = 1

Configuration

E + E + ROW

Extra 1 Flags
1 = TBC Type 1
2 = NEMA Ext. Coord
3 = Auto Daylight Savings
4 = EV Advance
5 = Remote Download
6 = Special Event
7 = Pretimed Operation
8 = Split Ring Operation

IC Select Flags
1 =
2 = Modem
3 = 7-Wire Slave
4 = Flash / Free
5 =
6 = Simplex Master
7 = 7-Wire Master
8 = Offset Interrupter

Assign 5 Outputs
1 = Right Turn Overlap
2 = TOD Outputs
3 = EV Beacon - Steady
4 = EV Beacon - Flashing
5 = Special Event Outputs
6 = Phase 3 & 7 Ped
7 = Advanced Warning Sign
8 =

Time and Date

8-0 Hour, Minute, Day-of-Week
8-1 Day-of-Month, Year, Month
8-F Seconds

Disable Parity	0

D+

Dial-Up Telephone Communications
(If set to a non-zero value, parity will be disabled)

Program Information

C + C + 0 = program
C + C + F = version

Remote Download

C + 0 + 4 = 1 -255
w/ E + E + E bit 5 on

INTERSECTION: Sea World Dr @ Friars Rd

223 Program

Row	1 Delay	3 Carry-over
0		
1		1.8
2		
3		
4		
5		
6		
7		
8		
9		
A		
B		
C		
D		
E	---	---
F	---	---

Detector Name	332 Input File	Detector Number
	1I1	14
	2I2U	1
	2I2L	5
	2I3U	21
	2I3L	25
	2I4	9
	3I5	16
	4I6U	3
	4I6L	7
	4I7U	23
	4I7L	27
	4I8	11
	1I9U	18
	3I9L	20
---	---	---
---	---	---

Row	2 Delay	4 Carry-over
0		
1		1.8
2		
3		
4		
5		
6		
7		
8		
9		
A		
B		
C		
D		
E	---	---
F	---	---

Detector Name	332 Input File	Detector Number
	5J1	13
	6J2U	2
	6J2L	6
	6J3U	22
	6J3L	26
	6J4	10
	7J5	15
	8J6U	4
	8J6L	8
	8J7U	24
	8J7L	28
	8J8	12
	5J9U	17
	7J9L	19
---	---	---
---	---	---

Detector Delay & Carryover <D Page>

D + X (across) + ROW

Row	Detector Numbers	E
A	1 2 3 4 5 6 7 8	12345678
B	9 10 11 12 -- -- -- --	1234____
C	13 14 15 16 17 18 19 20	12345678
D	-- -- -- -- 21 22 23 24	____5678
E	-- -- -- -- -- -- -- --	1234____
F	-- 25 26 27 28 -- -- --	_2345___

Active Detectors <D Page>

Row		0 Detector #
0		
1	System Det. # 1	
2	System Det. # 2	
3	System Det. # 3	
4	System Det. # 4	
5	System Det. # 5	
6	System Det. # 6	
7	System Det. # 7	
8	System Det. # 8	

System Detectors <D Page>

Max ON (min)	5	D+A+E
Max OFF (min)	60	D+A+F

Detector Failure Monitor

Phase Number		F+C+1
Time Before Yellow		F+C+3

Advance Warning Beacon - Sign 1

Phase Number		F+D+1
Time Before Yellow		F+D+3

Advance Warning Beacon - Sign 2

Long Failure	0.5	F+0+6
Short Failure	0.5	F+0+7

Power Cycle Correction (Default = 0.5)

INTER[illegible]CTION: Gesner St. & Morena Bl.

2[illegible] Program

Group Assignment:
Field Master Assignment:

N/S Street Nam[illegible] Morena
E/W Street Name: Gesner

Last Change: N/A
Timing Sheet By: BJU
Approved By:

Drawing Number: 30733-[illegible]
Sys. Ref. Number:
Timing implemented on: 4/25/02, 13:45, [illegible]

Row	Column # ---->	Morena 1	Morena 2	3	4	5	Morena 6	7	Gesner 8
	Phase # ---->	1	2	3	4	5	6	7	8
	N	↑	←				→		↓
0	Ped Walk		7						7
1	Ped FDW		9						19
2	Min Green	4	10				10		4
3	Type 3 Limit								
4	Add/Veh								
5	Veh Extn	2.0	4.4				4.2		2.0
6	Max Gap	2.0	4.4				4.2		2.0
7	Min Gap	2.0	0.2				0.2		2.0
8	Max Limit	30	60				60		40
9	Max Limit 2								
A	Bus Adv								
B	Call to Phs	6	6						
C	Reduce By		0.1				0.1		
D	Every		0.7				0.8		
E	Yellow	3.4 ~~3.0~~	4.9				5.0		3.4 ~~3.0~~
F	Red Clear	1.0	1.0				1.0		1.0

Phase Timing - Bank 1
F + Phase + Row

<F Page>

	E
RR-1 Delay	
RR-1 Clear	
EV-A Delay	0
EV-A Clear	0
EV-B Delay	0
EV-B Clear	0
EV-C Delay	0
EV-C Clear	0
EV-D Delay	0
EV-D Clear	0
RR-2 Delay	
RR-2 Clear	
View EV Delay	---
View EV Clear	---
View RR Delay	---
View RR Clear	---

Preempt Timing
F + E + Row

	F	Row
Permit	12___6_8	0
Red Lock		1
Yellow Lock		2
Min Recall		3
Ped Recall		4
Peds (View)	_2_____8	5
Rest In Walk		6
Red Rest		7
Dbl Entry		8
Max Recall		9
Soft Recall	_2___6__	A
Max 2		B
Cond Serv		C
Ped Lock	12345678	D
Yellow Start	_2___6__	E
1st Phases	_____8	F

Phase Functions
F + F + Row

<F Page>

DOC 2/25/03

Max Initial	0
Red Revert	5.0
All Red Start	0.0

Start / Revert Times

F + 0 + E
F + 0 + F
F + C + O

Drop Number	6	C + 0 + 0
Zone Number	6	C + 0 + 1
Area Number	5	C + 0 + 2
Area Address	99	C + 0 + 3
QuicNet Channel	DIGI 69	(QuicNet) Com52

Communication Addresses

Row		9 Green Clear	C Yellow Change	D Red Clear	0 Load-Switch #
A	Overlap A				
B	Overlap B				
C	Overlap C				
D	Overlap D				

Overlap Timing <F Page> <D Page>
F + COLOR + D + 0 + OVERLAP

Manual Plan	14	C + A + 1
Manual Offset	0	C + B + 1

Manual Selection

Manual Plan
0 = Automatic
1-9 = Plan 1-9
14 = Free
15 = Flash

Manual Offset 0 = Automatic
1 = Offset A
2 = Offset B
3 = Offset C

C + F + O

	F	Row
Free Lag	_2___6_8	0

Lag Phases <C Page>

Downtime Flash	255	(minutes)

Downtime Before Auto Manual Flash

Disable Ports	234

Disable Communications Ports

INTERSECTION: Gesner St. & Morena Bl.

Row	Time	Function	Day of Week	Column F Phases/Bits
0				
1				
2				
3				
4				
5				
6				
7				
8				
9				
A				
B				
C				
D				
E				
F				

TOD Function

7 + ROW

<D Page>

D + F + ROW

T.O.D. Functions
0 = Permitted Phases
1 = Red Lock
2 = Yellow Lock
3 = Veh Min Recall
4 = Ped Recall
5 =
6 = Rest In Walk
7 = Red Rest
8 = Double Entry
9 = Veh Max Recall
A = Veh Soft Recall
B = Maximum 2
C = Conditional Service
D = Free Lag Phases
E = Bit 1 - Local Override
Bit 2 - Phase Bank 2
Bit 3 - Phase Bank 3
Bit 4 - Disable Detector OFF Monitor
Bit 7 - Detector Count Monitor
Bit 8 - Real Time Split Monitor
F = Output Bits 1 thru 4

Row		F
0		
1	RR Overlap A - Phases	
2	RR Overlap B - Phases	
3	RR Overlap C - Phases	
4	RR Overlap D - Phases	
5	Ped 2P	_2_____
6	Ped 6P	
7	Ped 4P	
8	Ped 8P	_____8
9	Yellow Flash Phases	
A	Overlap A - Phases	
B	Overlap B - Phases	
C	Overlap C - Phases	
D	Overlap D - Phases	
E	Restricted Phases	
F	Assign 5 Outputs	

Configuration

<E Page>

E + F + ROW

Day of Week

1 = Sunday
2 = Monday
3 = Tuesday
4 = Wednesday
5 = Thursday
6 = Friday
7 = Saturday

Assign 5 Outputs
1 = Right Turn Overlap
2 = TOD Outputs
3 = EV Beacon - Steady
4 = EV Beacon - Flashing
5 = Special Event Outputs
6 = Phase 3 & 7 Ped
7 = Advanced Warning Sign
8 =

Row		E
0	Exclusive Phases	
1	RR-1 Clear Phases	
2	RR-2 Clear Phases	
3	RR-2 Limited Service	
4	Prot / Perm Phases	
5	Overlap A - Green Omit	
6	Overlap B - Green Omit	
7	Overlap C - Green Omit	
8	Overlap D - Green Omit	
9	Overlap Yellow Flash	
A	EV-A Phases	_2_____
B	EV-B Phases	
C	EV-C Phases	1_____6__
D	EV-D Phases	_____8
E	Extra 1 Config. Bits	1_345___
F	IC Select (Interconnect)	_2_____

Configuration

For access, set F + 9 + E = 1

E + E + ROW

Extra 1 Flags
1 = TBC Type 1
2 = NEMA Ext. Coord
3 = Auto Daylight Savings
4 = EV Advance
5 = Remote Download
6 = Special Event
7 = Pretimed Operation
8 = Split Ring Operation

IC Select Flags
1 =
2 = Modem
3 = 7-Wire Slave
4 = Flash / Free
5 =
6 = Simplex Master
7 = 7-Wire Master
8 = Offset Interrupter

Time and Date

8-0 Hour, Minute, Day-of-Week

8-1 Day-of-Month, Year, Month

8-F Seconds

Disable Parity	0	D+B+0

Dial-Up Telephone Communications

(If set to a non-zero value, parity will be disabled)

(This parameter is NOT downloaded)

Program Information

C + C + 0 = program

C + C + F = version

Remote Download

C + 0 + 4 = 1 -255

w/ E + E + E bit 5 on

Row	1 Delay	3 Carry-over	Detector Name	332 Input File	Detector Number
0				1I1	14
1		1.8		2I2U	1
2		1.8		2I2L	5
3				2I3U	21
4				2I3L	25
5				2I4	9
6				3I5	16
7				4I6U	3
8				4I6L	7
9				4I7U	23
A				4I7L	27
B				4I8	11
C				1I9U	18
D				3I9L	20
E		---	---	---	---
F	---	---	---	---	---

Row	2 Delay	4 Carry-over	Detector Name	332 Input File	Detector Number
0				5J1	13
1		1.8		6J2U	2
2		1.8		6J2L	6
3				6J3U	22
4				6J3L	26
5				6J4	10
6				7J5	15
7	~~10.0~~ 7.0			8J6U	4
8	3.0			8J6L	8
9				8J7U	24
A				8J7L	28
B				8J8	12
C				5J9U	17
D				7J9L	19
E	---	---	---	---	---
F	---	---	---	---	---

FLG 8-18-06

Detector Delay & Carryover <D Page>

D + X (across) + ROW

Row	Detector Numbers	E
A	1 2 3 4 5 6 7 8	12345678
B	9 10 11 12 -- -- -- --	1234
C	13 14 15 16 17 18 19 20	12345678
D	-- -- -- -- 21 22 23 24	5678
E	-- -- -- -- -- -- -- --	1234
F	-- 25 26 27 28 -- -- --	2345

Active Detectors <D Page>

Row		0 Detector #
0		
1	System Det. # 1	0
2	System Det. # 2	0
3	System Det. # 3	0
4	System Det. # 4	0
5	System Det. # 5	0
6	System Det. # 6	0
7	System Det. # 7	0
8	System Det. # 8	0

System Detectors <D Page>

Max ON (min)	5	D+A+E
Max OFF (min)	60	D+A+F

Detector Failure Monitor

Phase Number	0	F+C+1
Time Before Yellow	0.0	F+C+3

Advance Warning Beacon - Sign 1

Phase Number	0	F+D+1
Time Before Yellow	0.0	F+D+3

Advance Warning Beacon - Sign 2

Long Failure	0.5	F+0+6
Short Failure	0.5	F+0+7

Power Cycle Correction (Default = 0.5)

(These parameters are NOT downloaded.)

INTERSECTION: Gesner St. & Morena Bl.

Coordination Timing By:
Implemented On:

Row	Column # ----> / Plan Name ---->	Plan 1	2	3	4	5	6	7	8	9
0	Cycle Length									
1	Phase 1 - ForceOff									
2	Phase 2 - ForceOff									
3	Phase 3 - ForceOff									
4	Phase 4 - ForceOff									
5	Phase 5 - ForceOff									
6	Phase 6 - ForceOff									
7	Phase 7 - ForceOff									
8	Phase 8 - ForceOff									
9	Ring Offset									
A	Offset A									
B	Offset B									
C	Offset C									
D	Permissive									
E	Hold Release									
F	Ped Shift									

<C Page>

FOR OBSERVATION ONLY

Master Plan	C + A + 2
Current Plan	C + A + 3
Next Plan	C + A + 4
T.O.D. Plan	C + A + 5
Master Cycle	C + A + 0
Ring A Cycle	C + B + 0
Ring B Cycle	C + D + 0
Min Cycle	C + A + E
Max Cycle	C + B + E

Row	Tim e	Plan	Offset	Day of Week
0				
1				
2				
3				
4				
5				
6				
7				
8				
9				
A				
B				
C				
D				
E				
F				

TOD Coordination

<9 Key with C+0+9=1>

	E	Row		F
		0	Free Lag	_2_4_6__
Plan 1		1	Plan 1 - Lag	_2_4_6__
Plan 2		2	Plan 2 - Lag	_2_4_6__
Plan 3		3	Plan 3 - Lag	_2_4_6__
Plan 4		4	Plan 4 - Lag	
Plan 5		5	Plan 5 - Lag	
Plan 6		6	Plan 6 - Lag	
Plan 7		7	Plan 7 - Lag	
Plan 8		8	Plan 8 - Lag	
Plan 9		9	Plan 9 - Lag	
Coord Ped*		A	Coord Max *	
NEMA Hold		B	Coord Lag *	
		C		
		D		
		E		
		F		

Sync Phases
C + E + FUNCTION #

Lag Phases <C Page>
C + F + FUNCTION #

Transition Type	0

TBC Transition
C + D + D

Plan Select
1 thru 9 = Coordination Plan 1 thru 9
14 or E = Free
15 or F = Flash

Transition Type
0 = Shortway
Non-zero = Lengthen

ERSECTION: Morena Bl & Ingulf St

Group Assignment:
Field Master Assignment:

N/S Street Name: Morena Bl
E/W Street Name: Ingulf St

223 P. ram

Last Change:
Timing Sheet By: DOC
Approved By: ccc

Drawing Number: 25119-82-D
Sys. Ref. Number:
Timing Implemented on:

N

Row	Column # --->	1	2	3	4	5	6	7	8
	Phase # --->								
		Morena Bl					Morena Bl		Ingulf St
0	Ped Walk		7						7
1	Ped FDW		10						20
2	Min Green	4	10				10		4
3	Type 3 Limit								
4	Add/Veh								
5	Veh Extn	2.0	4.2				4.0		2.0
6	Max Gap	2.0	4.2				4.0		2.0
7	Min Gap	2.0	0.2				0.2		2.0
8	Max Limit	30	60				60		40
9	Max Limit 2								
A	Bus Adv								
B	Call to Phs	6	6						
C	Reduce By		0.1				0.1		
D	Every		0.7				0.8		
E	Yellow	3.4 ~~3.0~~	4.3				4.4		3.9 ~~3.6~~
F	Red Clear	1.0	1.0				1.0		1.0

Phase Timing - Bank 1
F + Phase + Row

<F Page>

POC 2/25/03

Row		E
	RR-1 Delay	
	RR-1 Clear	
	EV-A Delay	0
	EV-A Clear	0
	EV-B Delay	0
	EV-B Clear	0
	EV-C Delay	0
	EV-C Clear	0
	EV-D Delay	0
	EV-D Clear	0
	RR-2 Delay	
	RR-2 Clear	
	View EV Delay	---
	View EV Clear	---
	View RR Delay	---
	View RR Clear	---

Preempt Timing
F + E + Row

Row		F
0	Permit	12___6_8
1	Red Lock	
2	Yellow Lock	
3	Min Recall	
4	Ped Recall	
5	Peds (View)	_2_____8
6	Rest In Walk	
7	Red Rest	
8	Dbl Entry	
9	Max Recall	
A	Soft Recall	_2___6__
B	Max 2	
C	Cond Serv	
D	Ped Lock	12345678
E	Yellow Start	_2___6__
F	1st Phases	_____8

Phase Functions
F + F + Row

<F Page>

Max Initial	0
Red Revert	5.0
All Red Start	0.0

F + 0 + E
F + 0 + F
F + C + O

Start / Revert Times

Drop Number	10	C + 0 + 0
Zone Number	10	C + 0 + 1
Area Number	5	C + 0 + 2
Area Address	100	C + 0 + 3
QuicNet Channel	Com52	(QuicNet)

Communication Addresses
C + F + O

Free Lag	F	Row
	_2___6_8	0

Lag Phases <C Page>

Row		9 Green Clear	C Yellow Change	D Red Clear	0 Load-Switch #
A	Overlap A				
B	Overlap B				
C	Overlap C				
D	Overlap D				

Overlap Timing <F Page>
F + COLOR +

<D Page>
D + 0 + OVERLAP

Manual Plan	14
Manual Offset	

C + A + 1
C + B + 1

Manual Selection

Manual Plan
0 = Automatic
1-9 = Plan 1-9
14 = Free
15 = Flash

Manual Offset
0 = Automatic
1 = Offset A
2 = Offset B
3 = Offset C

Downtime Flash	~~60~~ 255	(minutes)

Downtime Before Auto Manual Flash
F + 0 + 8

Disable Ports	234

Disable Communications Ports
D + D + 9

TRAFFIC SIGNAL TIMING - PROGRA 200

PHASE TIMING

INTERVAL		1	2 (↓)	3	4 (←)	5	6 (↑)	7	8 (→)
WALK	0		7		7		7		7
FLASH D/W	1		11		11		9		11
MIN GREEN	2		~~4~~ 7		4		~~4~~ 7		4
TYPE 3 DET	3								
ADD/VEH	4								
VEH EXTEN *	5		2.8		2.0		2.8		2.0
MAX GAP *	6		2.8		2.0		2.8		2.0
MIN GAP *	7		.2		2.0		.2		2.0
MAX EXTEN	8		~~60~~		40		~~60~~		40
MAX 2	9		30				30		
	A								
CALLTO PHASE	B								
REDUCE BY	C		0.1				0.1		
REDUCE EVERY	D		1.2				1.2		
YELLOW	E		~~3.5~~ 4.1		3.0 9		~~3.5~~ 4.1		3.0 9
RED CLEAR	F		1.0		1.0		1.0		1.0

PREEMPT

	E	
RR1 DELAY		0
RR1 CLEAR		1
EVA DELAY		2
EVA CLEAR	3	3
EVB DELAY		4
EVB CLEAR	6	5
EVC DELAY		6
EVC CLEAR	3	7
EVD DELAY		8
EVD CLEAR		9
RR2 DELAY		A
RR2 CLEAR		B
EV CLR TMR		C
EV DLY TMR		D
RR CLR TMR		E
RR DLY TMR		F

MAX INITIAL (F-0-E) = 0 (KEYSTROKES: F + PHASE + LOCATION)

RED REVERT (F-0-F) = 5

ALL RED START (F-C-0) = _____

* MUST BE SAME FOR NON-DENSITY OPERATION

PHASE FUNCTION FLAGS

KEYSTROKES: F+F+FUNCTION#

FUNCTION		1	2	3	4	5	6	7	8
PERMIT	0		X		X		X		X
RED LOCK	1								
YELLOW LOCK	2								
VEH RECALL	3		X				X		
PED RECALL	4								
PEDS	5								
REST IN WALK	6								
RED REST	7								
DOUBLE ENTRY	8		X		X		X		X
MAX RECALL	9								
SOFT RECALL	A								
MAX 2	B								
COND SERVE	C								
RESERVED	D								
STARTUP	E		X				X		
FIRST PHASES	F				X				X

OVERLAP TIMING

KEYSTROKE: F+ COLOR CODE+OVERLAP

C00 — 14
C01 — 14
C02 — 5
C03 — 110
Com 52

	9 GREEN	C YELLO	D RED
OVERLAP A			
OVERLAP B			
OVERLAP C			
OVERLAP D			

PHASE SEQUENCES (CFO)

	1	2	3	4	5	6	7	8
LAG 0 (FREE)		X		X		X		X

TOD OUTPUT ACTIVATED BY 2ND RELAY TO TURN PREEMPT ON DURING AM PE

SIGNAL PREEMPTED BY Ø2 GREEN AT MORENA BL & TECOLOTE RD THROUGH EV RELAY

LOC: KNOXVILLE ST & MORENA BL

DATE: 5/20/93

DETECTOR TIMES (332 CABINET)

→ SET DELAY SET CARRY OBS COUNT OBS DELAY OBS CARRY

	1	2	3	4	5	6	7	8	9	A
0	111	5J1	111	5J1	111	5J1	111	5J1	111	5J1
1	212U	6J2U	212U 1.8	6J2U 1.8	212U	6J2U	212U	6J2U	212U	6J2U
2	212L	6J2L	212L	6J2L	212L	6J2L	212L	6J2L	212L	6J2L
3	213U	6J3U	213U	6J3U	213U	6J3U	213U	6J3U	213U	6J3U
4	213L	6J3L	213L	6J3L			213L	6J3L	213L	6J3L
5	214	6J4	214	6J4			214	6J4	214	6J4
6	315	7J5	315	7J5	315	7J5	315	7J5	315	7J5
7	416U	8J6U	416U	8J6U	416U	8J6U	416U	8J6U	416U	8J6U
8	416L 10.0	8J6L 10.0	416L	8J6L	416L	8J6L	416L	8J6L	416L	8J6L
9	417U	8J7U	417U	8J7U	417U	8J7U	417U	8J7U	417U	8J7U
A	417L	8J7L	417L	8J7L			417L	8J7L	417L	8J7L
B	418	8J8	418	8J8			418	8J8	418	8J8
C	119U	5J9U	119U	5J9U	119U	5J9U	119U	5J9U	119U	5J9U
D	319L	7J9L	319L	7J9L	319L	7J9L	319L	7J9L	319L	7J9L
E										
F										

KEYSTROKES: D + X + Y

TIME OF DAY FEATURES

EVENT

	TIME	FUNCT	DAY OF WEEK 1 S	2 M	3 T	4 W	5 T	6 F	7 S
0	0900	F		X	X	X	X	X	
1	1800	F		X	X	X	X	X	
2	0001	E	X	X	X	X	X	X	X
3									
4									
5									
6									
7									
8									
9									
A									
B									
C									
D									
E									
F									

KEYSTROKES: 7+EVENT#

FUNCTION BY PHASE

	1	2	3	4	5	6	7	8
			X					
	X							

KEYSTROKES: D-F-EVENT #

TIME OF DAY LOCAL FUNCTION CODES

0 - PERMIT	7 - RED REST	E - 1 - LOCAL OVERIDE	F - TOO OUTPUTS
1 - RED LOCK	8 - DBL ENTRY	2 - PHASE BANK 2 2P	1 - TOO OUT 1
2 - YELLOW OCK	9 - VEH MAX RCL	3 - PHASE BANK 3 6P	2 - TOO OUT 2
3 - VEH RECALL	A - SOFT RECALL	7 - DET COUNT 4P	3 - TOO OUT 3
4 - PED RECALL	B - MAX II EXT	8 - SPLIT MONITOR 8P	4 - TOO OUT 4
5 - RESERVED	C - COND SERVE		
6 - REST IN WALK	D - TOO LAG Ø		

CURRENT TIME AND DATE

8-0 HOUR, MINUTE, DAY OF WEEK

8-1 DAY OF MONTH, YEAR, MONTH

8+F SECONDS

CONFIGURATION DATA

NOTE "E" KEY ENABLED (F-9-E ≠ 0)

KEYSTROKES: E+E+INTERVAL

INTERVAL

		PHASE 1	2	3	4	5	6	7	8
0	EXCLU PH								
1	RR1 GRN CL								
2	RR2 GRN CL								
3	RR2 LTO								
4									
5	OLA GOMIT								
6	OLB GOMIT								
7	OLC GOMIT								
8	OLD GOMIT								
9	OV FL VEL								
A	EMVEH A		X						
B	EMVEH B		X				X		
C	EMVEH C						X		
D	EMVEH D								
E	EXTRA	X		X		X			
F	IC SELECT		X						

EXTRA (E+E+E)
- 1-TBC TYPE
- 2-NEMA COOD
- 3-DAYLIGHT SAV
- 4-EV ADVANCE
- 6-SPECIAL EVENT
- 7-PRETIMED
- 8-SPLIT RING

ICSEL: (E+E+F)
- 1- SIMPLEX IN
- 2-2-WAY MODEM
- 3-7 WIRE IN
- 4-FLH/FREE
- 5-SIMPLEX OUT
- 7-7 WIRE OUT

ASSIGNS (E+F+F)
- 1-RT OVERLAP
- 2-TOO OUTPUTS
- 3-STEADY EV BEAC
- 4-FLASH EV BEAC

KEYSTROKES: E+F+INTERVAL

INTERVAL

		PHASE 1	2	3	4	5	6	7	8
0									
1	RR OLAP A								
2	RR OLAP B								
3	RR OLAP C								
4	RR OLAP D								
5	PED2P		X						
6	PED6P						X		
7	PED4P				X				
8	PED8P								X
9	FLH YELO								
A	OVERLAP A								
B	OVERLAP B								
C	OVERLAP C								
D	OVERLAP D								
E	RESTRICT								
F	ASSIGNS								

ERSECTION: INTERSECTION: Morena Blvd & Milton St

223 P_ram

Group Assignment:
Field Master Assignment:

N/S Street Name Morena Blvd
E/W Street Name Milton St

Last Change:
Timing Sheet By: DOC
Approved By: uc

Drawing Number: 25119-83-D
Sys. Ref. Number:
Timing implemented on:

N

Row	Column # —>	1	2	3	4	5	6	7	8
	Phase # —>	1	2	3	4	5	6	7	8
		Morena Blvd					Morena Blvd		Milton St
0	Ped Walk		7						7
1	Ped FDW		11						18
2	Min Green	4	10				10		4
3	Type 3 Limit								
4	Add/Veh	1							
5	Veh Extn	2.0	4.0				4.0		2.0
6	Max Gap	2.0	4.0				4.0		2.0
7	Min Gap	2.0	0.2				0.2		2.0 ~~0.2~~
8	Max Limit	30	60				60		40
9	Max Limit 2								
A	Bus Adv								
B	Call to Phs	6	6						
C	Reduce By		0.1				0.1		
D	Every		0.8				0.8		
E	Yellow	3.4 ~~3.0~~	4.3				4.4		4.1
F	Red Clear	1.0	1.0				1.0		1.0

DOC 2/25/03

Phase Timing - Bank 1
F + Phase + Row

<F Page>

	E
RR-1 Delay	
RR-1 Clear	
EV-A Delay	0
EV-A Clear	0
EV-B Delay	0
EV-B Clear	0
EV-C Delay	0
EV-C Clear	0
EV-D Delay	0
EV-D Clear	0
RR-2 Delay	
RR-2 Clear	
View EV Delay	---
View EV Clear	---
View RR Delay	---
View RR Clear	---

Preempt Timing
F + E + Row

Row		F
0	Permit	12___6_8
1	Red Lock	
2	Yellow Lock	
3	Min Recall	
4	Ped Recall	
5	Peds (View)	_2_____8
6	Rest In Walk	
7	Red Rest	
8	Dbl Entry	
9	Max Recall	
A	Soft Recall	_2___6__
B	Max 2	
C	Cond Serv	
D	Ped Lock	12345678
E	Yellow Start	_2___6__
F	1st Phases	_____8

Phase Functions <F Page>
F + F + Row

Max Initial	0
Red Revert	5.0
All Red Start	0.0

F + 0 + E
F + 0 + F
F + C + O

Start / Revert Times

Drop Number	11	C + 0 + 0
Zone Number	11	C + 0 + 1
Area Number	5	C + 0 + 2
Area Address	101	C + 0 + 3
QuicNet Channel	Com52	(QuicNet)

Communication Addresses

Row		9 Green Clear	C Yellow Change	D Red Clear	0 Load-Switch #
A	Overlap A				
B	Overlap B				
C	Overlap C				
D	Overlap D				

Overlap Timing <F Page> <D Page>
F + COLOR + D + 0 + OVERLAP

Manual Plan	14	C + A + 1
Manual Offset		C + B + 1

Manual Selection

Manual Plan
0 = Automatic
1-9 = Plan 1-9
14 = Free
15 = Flash

Manual Offset
0 = Automatic
1 = Offset A
2 = Offset B
3 = Offset C

C + F + O
Free Lag

F	Row
_2___6_8	0

Lag Phases <C Page>

Downtime Flash	~~60~~ 255 (minutes)

Downtime Before Auto Manual Flash
F + 0 + 8

Disable Ports	234

Disable Communications Ports
D + D + 9

INTERSECTION: INTERSECTION: Morena Blvd & Milton St

223 Program

Row	Time	Function	Day of Week	Column F Phases/Bits
0				
1				
2				
3				
4				
5				
6				
7				
8				
9				
A				
B				
C				
D				
E				
F				

TOD Function

7 + ROW

<D Page>

D + F + ROW

T.O.D. Functions
0 = Permitted Phases
1 = Red Lock
2 = Yellow Lock
3 = Veh Min Recall
4 = Ped Recall
5 =
6 = Rest In Walk
7 = Red Rest
8 = Double Entry
9 = Veh Max Recall
A = Veh Soft Recall
B = Maximum 2
C = Conditional Service
D = Free Lag Phases
E = Bit 1 - Local Override
Bit 2 - Phase Bank 2
Bit 3 - Phase Bank 3
Bit 4 - Disable Detector OFF Monitor
Bit 7 - Detector Count Monitor
Bit 8 - Real Time Split Monitor
F = Output Bits 1 thru 4

Row		F
0		
1	RR Overlap A - Phases	
2	RR Overlap B - Phases	
3	RR Overlap C - Phases	
4	RR Overlap D - Phases	
5	Ped 2P	_2_____
6	Ped 6P	
7	Ped 4P	
8	Ped 8P	_____8
9	Yellow Flash Phases	
A	Overlap A - Phases	
B	Overlap B - Phases	
C	Overlap C - Phases	
D	Overlap D - Phases	
E	Restricted Phases	
F	Assign 5 Outputs	

Configuration

<E Page>

E + F + ROW

Day of Week

1 = Sunday
2 = Monday
3 = Tuesday
4 = Wednesday
5 = Thursday
6 = Friday
7 = Saturday

Assign 5 Outputs
1 = Right Turn Overlap
2 = TOD Outputs
3 = EV Beacon - Steady
4 = EV Beacon - Flashing
5 = Special Event Outputs
6 = Phase 3 & 7 Ped
7 = Advanced Warning Sign
8 =

Row		E
0	Exclusive Phases	
1	RR-1 Clear Phases	
2	RR-2 Clear Phases	
3	RR-2 Limited Service	
4	Prot / Perm Phases	
5	Overlap A - Green Omit	
6	Overlap B - Green Omit	
7	Overlap C - Green Omit	
8	Overlap D - Green Omit	
9	Overlap Yellow Flash	
A	EV-A Phases	_2_____
B	EV-B Phases	
C	EV-C Phases	1____6__
D	EV-D Phases	_____8
E	Extra 1 Config. Bits	1_345
F	IC Select (Interconnect)	_2_____

Configuration

For access, set F + 9 + E = 1

E + E + ROW

Extra 1 Flags
1 = TBC Type 1
2 = NEMA Ext. Coord
3 = Auto Daylight Savings
4 = EV Advance
5 = Remote Download
6 = Special Event
7 = Pretimed Operation
8 = Split Ring Operation

IC Select Flags
1 =
2 = Modem
3 = 7-Wire Slave
4 = Flash / Free
5 =
6 = Simplex Master
7 = 7-Wire Master
8 = Offset Interrupter

Time and Date

8-0 Hour, Minute, Day-of-Week

8-1 Day-of-Month, Year, Month

8-F Seconds

Disable Parity	0	D+B+0

Dial-Up Telephone Communications

(If set to a non-zero value, parity will be disabled)

(This parameter is NOT downloaded)

Program Information

C + C + 0 = program

C + C + F = version

Remote Download

C + 0 + 4 = 1 -255

w/ E + E + E bit 5 on

Row	1 Delay	3 Carry-over
0		
1		1.8
2		
3		
4		
5		
6		
7		
8	10.0	
9		
A		
B		
C		
D		
E		---
F	---	---

Detector Name	332 Input File	Detector Number
	1I1	14
	2I2U	1
	2I2L	5
	2I3U	21
	2I3L	25
	2I4	9
	3I5	16
	4I6U	3
	4I6L	7
	4I7U	23
	4I7L	27
	4I8	11
	1I9U	18
	3I9L	20
---	---	---
---	---	---

Row	2 Delay	4 Carry-over
0		
1		1.8
2		
3		
4		
5		
6		
7		
8		
9		
A		
B		
C		
D		
E	---	---
F	---	---

Detector Name	332 Input File	Detector Number
	5J1	13
	6J2U	2
	6J2L	6
	6J3U	22
	6J3L	26
	6J4	10
	7J5	15
	8J6U	4
	8J6L	8
	8J7U	24
	8J7L	28
	8J8	12
	5J9U	17
	7J9L	19
---	---	---
---	---	---

Detector Delay & Carryover <D Page>

D + X (across) + ROW

Row	Detector Numbers	E
A	1 2 3 4 5 6 7 8	12345678
B	9 10 11 12 -- -- -- --	1234
C	13 14 15 16 17 18 19 20	12345678
D	-- -- -- -- 21 22 23 24	5678
E	-- -- -- -- -- -- -- --	1234
F	-- 25 26 27 28 -- -- --	2345

Active Detectors <D Page>

Row		0 Detector #
0		
1	System Det. # 1	0
2	System Det. # 2	0
3	System Det. # 3	0
4	System Det. # 4	0
5	System Det. # 5	0
6	System Det. # 6	0
7	System Det. # 7	0
8	System Det. # 8	0

System Detectors <D Page>

Max ON (min)	5	D+A+E
Max OFF (min)	60	D+A+F

Detector Failure Monitor

Phase Number	0	F+C+1
Time Before Yellow	0.0	F+C+3

Advance Warning Beacon - Sign 1

Phase Number	0	F+D+1
Time Before Yellow	0.0	F+D+3

Advance Warning Beacon - Sign 2

Long Failure	0.5	F+0+6
Short Failure	0.5	F+0+7

Power Cycle Correction (Default = 0.5)

(These parameters are NOT downloaded.)

Morena Blvd Station Area Planning Study

Appendix D:

Land Use Alternatives Support Materials

D.0 Land Use Alternatives Support Materials

Appendix C provides supplemental text explanation of the land use alternatives developed for Workshop 3 and some of the factors/metrics used to craft these alternatives.

D.1 Land Use Alternatives Overview

The community was presented with three land use alternatives in Workshop 3 of the community outreach process. In order to provide the community with a range of options, the planning team developed three scenarios which represent varying land use intensities that are all consistent with the vision described in the previous section. These alternatives range from least intensive ("Alternative 1") to most intensive ("Alternative 3"), with one scenario in between ("Alternative 2").

The vision for the land use scenarios of the MBAP was based on input provided by the community, the results of market demand/trend analyses, and the city's goals of supporting transit through complementary land use patterns. The resulting land use vision converts many existing retail/commercial parcels into a higher amount of multi-family residential parcels. Key parcels near the existing and proposed trolley stations are envisioned for a mix of uses to include residential, retail, commercial, and office. The goal of this shift is to accommodate future growth in areas that are well served by transit, creating hubs of activity and density that incorporate sustainable principles while also adding diversity and vibrancy to the existing neighborhood. Whenever possible, a balance of jobs and housing should be obtained in order to keep trips more local. A balance of destinations and origins in areas around transit facilities allows for primary and reverse commute balance of users on the transit line. The incorporation of a wide variety of uses that support a community's needs generally keeps trips shorter, allowing for more of them to be made by bike or walking. All of these considerations are critical to creating a complete community.

In order to capitalize on the anticipated investment in the Mid-Coast Trolley corridor and its associated stations, the plan set a goal of achieving a range of between 30 and 70 dwelling units per acre. This range is widely accepted as the ideal range for transit oriented development. The goal is to strategically place the higher density development closest to the stations where walk times are shortest, and gradually decrease density as the distance increases. This graduated approach also has the benefit of lessening physical incompatibilities with existing lower density single family development.

The initial phases of the project established that a density of 70 dwelling units per acre could generally be achieved through a development pattern of four stories of multi-family construction built on a podium of two floors structured parking, resulting in an overall height of six stories. However, this height in some areas is not likely to be supported by the public based on concerns over density and the potential for blocking views from many homes located up slope of the study area. The south end of the project study area does not have the neighborhood sensitivity of view blockage as the north end does. This is a result of the depth of non-residential development between I-5 and the slopes where housing exists, and it is also related to the lower elevation gains that occur when moving up on landforms to the east. Not as many views in the south end would be blocked and most of the views are of the industrial areas of Morena Boulevard and the freeway aerial structures of I-5 and I-8.

As a point of comparison, below are key metrics comparing existing land use quantities (based on City-provided 2013 GIS data) with the community plan land uses (also referred to as the "adopted" land uses) and the MBAP land uses as developed in the preferred scenario:

Existing Land Uses:
- Residential: approximately 1,000 dwelling units
- Non-Residential (commercial, retail, office, industrial, etc.): approximately 3.4 million square feet

Community Plan/"Adopted" Land Uses:
- Residential: approximately 3,600 dwelling units
- Increase of approximately 2,600 dwelling units from existing
- Non-Residential (commercial, retail, office, industrial, etc.): approximately 3.2 million square feet
- Decrease of approximately 200,000 square feet from existing

D.2 Proposed Development Level

In the land use alternatives developed by the planning team, proposed development is largely limited to areas adjacent to the trolley stations and areas identified as mixed-use. The goal is to strategically place the higher density development closest to the stations where walk times are shortest, and gradually decrease density as the distance increases. This graduated approach also has the benefit of lessening physical incompatibilities with existing lower density single family development.

Proposed Densities

Early in the project, the planning team established that a density of 70 dwelling units per acre could generally be achieved through a development pattern of four stories of multi-family construction built on a podium of two floors structured parking.

Proposed Building Heights

The proposed maximum height is 50' – 60' (approximately five to six stories) throughout the study area. The focus of any increased height would be for new development adjacent to transit stations or transit oriented development.

Proposed Floor Area Ratios

Proposed floor area ratio recommendations vary throughout the study area, with a low of approximately 1.20 and a high of approximately 2.45. These ratios include both residential and non-residential uses. Since the MBAP envisions the majority of this development to be additional multi-family residential, the recommended non-residential component of mixed use projects would be a maximum of 0.25.

D.3 Alternative 1 (Conservative Land Use Alternative)

The conservative land use scenario envisions the least amount of land use changes paired with the lowest intensity of development on the changed parcels. The largest areas of change in the Conservative scenario include:

- The Bayview Plaza site is proposed to include mixed-use development, including ground floor commercial/retail and upper floors residential over structured parking. The proposed maximum height is 50' (approximately five stories). Significant development on this site is warranted because of the close proximity to the proposed Clairemont station. Not only would residents/patrons of the development benefit by having easy access to transit, but also the station would benefit from the activity and security provided by nearby shops and residents.
- No changes are proposed at the business hub near Ashton/Napier in order to encourage development similar to what exists. One potential change is the replacement of the fast food restaurant with a small public park.
- RV parks east of Morena (at Knoxville and Frankfort) are envisioned to be converted to multi-family residential. Proposed maximum height is 40' – 50', although the edges closer to the surrounding residential could transition to 30'.
- The most intensive expansion of residential occurs south of Tecolote Road, where little to no residential uses currently exists. Mixed use and/or exclusive use residential parcels are proposed along Vega Street on the Toys R Us, Petco, and Coles sites (west of West Morena), and east of Morena Boulevard between Cushman Avenue and Linda Vista Road. The proposed maximum height is 50' – 60' (approximately five to six stories). This corridor is a prime location between the proposed Tecolote trolley station and the existing Morena station. New residences and shops in this area would be within a 10 to 15 minute walk of at least one of these stations.
- The conservative scenario proposes the retention of and reinvestment in existing retail between Morena and West Morena (between the south split and Tecolote Road) and along the east side of Morena just south of the south split. This is envisioned as the core of the "Design District" and will create continuity in the character of the neighborhood as residential uses are introduced.
- The conservative scenario also envisions the retention of existing commercial/restaurant uses along the east side of Morena Boulevard (between the Linda Vista Road and Tecolote Road).

D.4 Alternative 3 (Aggressive Land Use Alternative)

The aggressive land use scenario envisions an extensive amount of land use changes paired with high intensity development on the changed parcels. The largest areas of change in the aggressive scenario include:

- The Bayview Plaza site is proposed to include mixed-use development, including ground floor commercial/retail and upper floors residential over structured parking. The proposed maximum height is 60' (approximately six stories). Significant development on this site is warranted because of the close proximity to the proposed Clairemont station. Not only would residents/patrons of the development benefit by having easy access to transit, but the station would benefit from the activity and security provided by nearby shops and residents.

- The commercial properties near the proposed Clairemont station (along the northern portion of Morena Boulevard and near the intersection of Clairemont Drive and Denver Street) would be encouraged to increase density beyond existing levels. The goal would be to achieve a maximum of 30' on most parcels. This would not require a zoning/land use change, but represents an increase in development beyond what exists currently. More intense development in these areas near the Clairemont station would further improve the transit-land use relationship and further reduce vehicular trips in the area.
- The City Chevrolet site (at Milton Street and Morena Boulevard) is envisioned as converting to multi-family residential, with a maximum height of 60' for portions of the project, although the edges along Morena and near the surrounding neighborhood could transition to 20' – 30'. This change of use would occur only if the dealership decided to relocate.
- No changes are proposed at the business hub near Ashton Street/Napier Street in order to encourage development similar to existing uses. Where the conservative and preferred scenarios proposed a park next to the fire station, the aggressive scenario proposes two public plazas, one on the block with the fire station and one at the corner of Napier Street and Morena Boulevard (the current site of the BMW auto repair).
- RV parks east of Morena (at Knoxville Street and Frankfort Street) are envisioned to be converted to multi-family residential. The proposed maximum height is 60', although the edges closer to the surrounding residential could transition to 30'.
- Additional properties along Morena Boulevard between Tecolote Road and the north split with West Morena Boulevard are converted to multi-family residential with a maximum height of 60'. These properties capitalize on the close proximity to the proposed Tecolote trolley station, which would allow many new residents to walk to the station.
- The area around the proposed Tecolote station increases residential uses between Morena and West Morena as in the conservative scenario, and further expands the mixed-use residential/retail uses west of West Morena. In this scenario, the residential/retail includes the current sites of Toys R Us, Petco, Jerome's, and A-1 Storage. The maximum height for development in this area is 60'. This area is a key location for additional density as it borders the proposed station site and represents some of the largest individual parcels in the corridor, allowing for larger individual developments.
- The aggressive scenario also proposes the conversion of all of the light industrial properties to the southwest of Morena/West Morena. Maximum heights in this area would vary from 30' – 60' to capitalize on the key location between the proposed Tecolote station and the existing Morena station.
- The area near the existing Morena station increases both residential and mixed-use land uses. Under this scenario, two new high-density residential nodes are created: one southeast of Cushman Avenue and Morena Boulevard and the other southwest of Sherman Street and Morena Boulevard. In addition to these nodes, a mixed-use residential/office node is created north of Linda Vista Road and Napa Road. These locations are ideal for higher density development because of their close proximity to the Morena station, as well as USD. The siting of additional office uses in this location is directly tied to the anticipated need for office space near the university. The maximum height for all these nodes is 60'.

- The aggressive scenario also proposes the retention of and reinvestment in existing retail between Morena and West Morena (between the south split and Tecolote Road), on either side of Buenos Avenue, and along the east side of Morena just south of the south split. This is envisioned as the core of the "Design District" and will create continuity in the character of the neighborhood as residential uses are introduced.
- The aggressive scenario also envisions the retention of existing commercial/restaurant uses along the east side of Morena Boulevard (between Linda Vista Road and Tecolote Road). Numerous restaurants already are located along this segment of roadway, and retaining the existing land use and zoning will help to attract more of these uses in this area.

D.5 Alternative 2 (Moderately Aggressive Scenario/Proposed Land Use Alternative)

In general, workshop attendees supported the goal of shifting some non-residential land uses to residential land uses, as long as a core of businesses were retained and enhanced to support the budding "design district" identity of the corridor. Attendees recognized the importance of increasing the level of development near the existing and proposed trolley stations as a means to direct growth away from established single-family neighborhoods and support long-term sustainability goals. There were varying opinions on the appropriate level of density near the stations, however. Some workshop attendees agreed that 60' in height was appropriate in certain locations, especially if it is "stepped back" as it approaches lower density development. Other attendees were adamant that the existing 30' height limit (in the Clairemont planning area) be enforced. Of particular concern to this group were blockage of views and the introduction of too much development in an already established neighborhood.

The following are key points and comments received from community members regarding the land use alternatives:

- Several people requested to make sure building heights are restricted to a maximum of 30 feet to prevent view blockages.
- People overall agreed that higher density seems appropriate for this corridor, especially near Linda Vista Road due to the close proximity to USD.
- The idea of implementing a parking district along Morena Boulevard was supported.

Based on input provided by the community and city staff, land use alternatives were merged to produce a scenario that decreases non-residential uses while providing a significant increase in multi-family residential/mixed-uses (see Figure D-1).

The land use quantities as proposed in the Proposed Land Use alternative are:

- Residential: approximately 5,800 dwelling units (Increase of approximately 4,800 from existing)*
- Non-residential commercial, retail, office, and industrial uses: 2.7 million square feet (Decrease of approximately 700,000 square feet from existing)*

*Metrics represent the combined total for parcels adjusted by the MBAP Proposed Land Use and the unchanged parcels remaining in the study area based on their Adopted Community Plan land use.

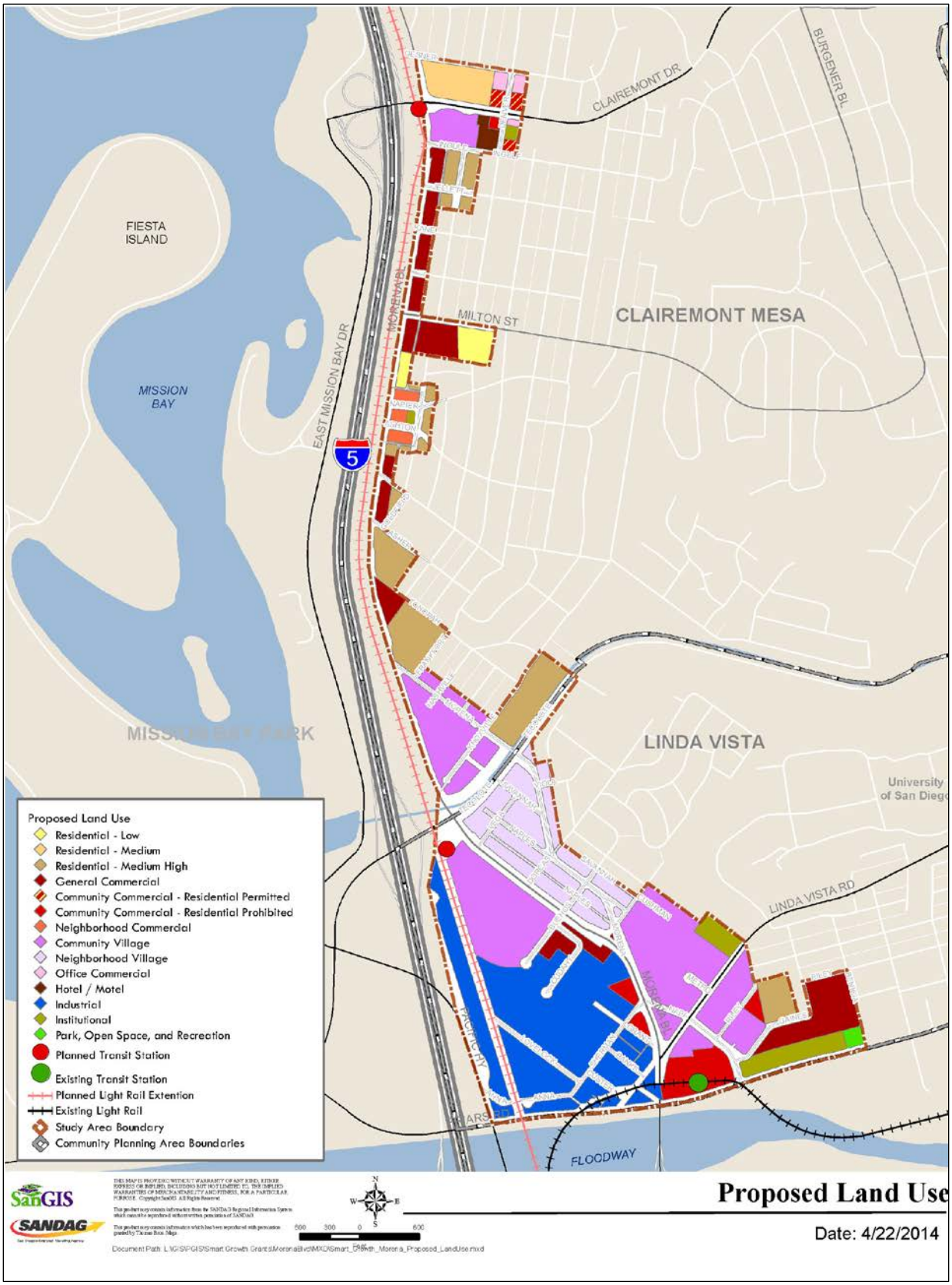

Figure D-1: Proposed Land Use

Morena Blvd Station Area Planning Study

Appendix E:
Mobility Alternatives Support Materials

Contents:

- Mobility Alternatives Development Materials
- Travel Demand Model Output Sheets
- Intersection Turning Movements
- Level of Service Reports - Adopted Community Plan
- Level of Service Reports - Preferred Alternative Mid-term
- Level of Service Reports - Preferred Alternative Long-term
- Trip Generation Supporting Materials
- Intersection Volume Comparison

Morena Blvd Station Area Planning Study

Appendix E:

Mobility Alternatives Development Support Materials

E.1 Process for Developing Alternatives

All concepts developed by this project need to take into account the goal of supporting all travel modes, not only because California Complete Streets legislation requires it, but to address safety and connectivity goals for the local community, as well as the first and last mile pedestrian and bike connections to the existing and proposed trolley stations. The intent of Complete Streets legislation is to take all roadway users into account when planning for changes along a roadway. Although the legislation does not require that all uses be equally balanced or that they have a place within the geometric cross section of the right-of-way, they do need to be accommodated in a safe and direct manner, within the study area itself. All mobility alternatives considered take into account the Complete Streets requirements and they look at providing additional linkages to the existing and proposed transit stations in the area.

Land use scenarios also are an important foundation to transportation planning. The land uses proposed by the Morena Boulevard Area Plan (MBAP) not only have an impact on the urban form of the study area, but also the efficiency and loading demand on the circulation system. Any change in land uses, or change in intensity of land use, can have an impact, positive or negative, on mobility within the study area.

The primary approach for developing mobility alternatives was to first decide on varying levels of land use that look at different land use mixes, densities and vehicular trip generation. Then, the mobility alternatives were paired up with the appropriate land use alternatives as required to support varying levels of trip generation and traffic volumes.

E.2 Overall Project Land Use Vision

The vision for the land use scenarios of the MBAP was based on input provided by the community, the results of market demand/trend analyses, and the city's goals of supporting transit through complementary land use patterns. The resulting land use vision converts many existing retail/commercial parcels into a higher amount of multi-family residential parcels. Key parcels near the existing and proposed trolley stations are envisioned for a mix of uses to include residential, retail, commercial, and office. The goal of this shift is to accommodate future growth in areas that are well served by transit, creating hubs of activity and density that incorporate sustainable principles while also adding diversity and vibrancy to the existing neighborhood. Whenever possible, a balance of jobs and housing should be obtained in order to keep trips more local. A balance of destinations and origins in areas around transit facilities allows for primary and reverse commute balance of users on the transit line. The incorporation of a wide variety of uses that support a community's needs generally keeps trips shorter, allowing for more of them to be made by bike or walking. All of these considerations are critical to creating a complete community.

In order to capitalize on the anticipated investment in the Mid-Coast Trolley corridor and its associated stations, the plan set a goal of achieving a range of between 30 and 70 dwelling units per acre. This range is widely accepted as the ideal range for transit oriented development. The goal is to strategically place the higher density development closest to the stations where walktimes are shortest, and gradually decrease density as the distance increases. This graduated approach also has the benefit of lessening physical incompatibilities with existing lower density single family development.

The initial phases of the project established that a density of 70 dwelling units per acre could generally be achieved through a development pattern of four stories of multi-family construction built on a podium of two floors structured parking, resulting in an overall height of six stories. However, this height in some areas is not likely to be supported by the public based on concerns over density and the potential for blocking views from many homes located up slope of the study area. The south end of the project study area does not have the neighborhood sensitivity of view blockage as the north end does. This is a result of the depth of non-residential development between I-5 and the slopes where housing exists, and it is also related to the lower elevation gains that occur when moving up on landforms to the east. Not as many views in the south end would be blocked and most of the views are of the industrial areas of Morena Boulevard and the freeway aerial structures of I-5 and I-8.

E.3 Workshop Alternative Concept Plans

The following descriptions and accompanying maps are representative of materials shown to the community through a series of meetings, presentations and workshops. This section should not to be confused with the recommended plans discussed later in the chapter. They are included here to represent the broad range of options that were reviewed and to document why certain options did not move forward into the recommendations phase of this study.

Common Circulation Elements Found in All 3 Alternative Concepts

The following design elements are common among the three conceptual plans developed for the workshops. They are each applied to their unique street conditions and are designed to improve the pedestrian, cyclist, and vehicular street environment. Common elements include:

- Use of lane diets (lane widths) to increase width for other uses and to calm traffic
- Use of road diets (dropping a lane) to increase width for other uses
- Provision of bicycle facilities
- Curb extensions that improve the visibility of walkers, and shortens the crossing distance
- Elements that encourage traffic calming
- New opportunities for landscaping
- Streetscape with tree-planted medians and parkways
- Increased visual quality
- Options for storm water management

E.3.1 Alternative 1: Lane Reductions with “T” Intersections (Conservative Circulation Alternative)

The primary design concept for this alternative is how the safety and comfort of pedestrians, cyclists, and drivers can be improved by reconfiguring several existing intersections into standard intersections. Please refer to the overview map on Figure 1, cross sections shown on Figure 2 and 3, and detail sheets shown on Figures 4 through 7. This approach is considered to be conservative since it preserves future capacity for additional traffic while taking back a portion of the excess rights-of-way that are not needed based on volume (present, planned and proposed).

The following design elements are unique to the northern portion of the study area north of the new LRT Tecolote Station (Figures 4 and 5):

- Morena Boulevard is proposed to have one traffic lane southbound and two traffic lanes northbound.
- Parallel parking is provided on the eastern side of Morena Boulevard between Jellet Street and Knoxville Street.
- Buffered Class 2 bike lanes are included on both sides of Morena Boulevard between Jellet Street and Knoxville Street.
- A new standard intersection where Knoxville Street meets West Morena Boulevard is proposed
- A proposed trail along Tecolote Creek on the northern side of Tecolote Road between Morena Boulevard and West Morena Boulevard provides pedestrian access.
- A new walkway on the southern side of Tecolote Road between Savannah Street and West Morena Boulevard that will provide pedestrian and bike access from various neighborhood streets in the area.

Southern portion from the new Tecolote LRT Station to the southern boundary of study area (Figures 6 and 7):

- West Morena Boulevard is designed to have two traffic lanes both northbound and southbound.
- Parallel parking is provided on both sides of Morena Boulevard between Vega Street and the southern Morena split.
- Buffered Class 2 bike lanes are provided on both sides of Morena Boulevard between Vega Street and the southern Morena split.
- Class 2 bike lanes continue on both sides of Morena Boulevard past the southern Morena split towards the southern boundary of the study area.
- New parking and green space proposed on the eastern side of Morena Boulevard between the southern Morena split and the intersection where Napa Street, Sherman Street and Morena Boulevard meet.

Design treatments to the eastern extension of Morena Boulevard north of the current Morena split (Figure 7):

- Class 2 bike lanes on both sides and a pedestrian mid-block crossing north of Dorcas Street.
- The southern Morena split and the intersection where Napa Street, Sherman Street and Morena Boulevard meet are redesigned as standard intersections. Although the existing freeway-style street configuration is efficient for motorists, it negatively affects the pedestrian and cycling experience and introduces safety concerns. By redesigning these as standard intersections, vehicular speeds are reduced, which in turn improves the safety and comfort of all roadway users.

E.3.2 Alternative 2: Lane Reductions with “Triangle –about” (Moderate Circulation Alternative)

The design concept for this alternate focuses on the reconfiguration of circulation patterns around the triangular parcel of land bordered by Napa Street, Morena Boulevard, and Linda Vista Road. Please refer to the overview map on Figure 8, cross sections shown on Figure 9 and 10, and detail sheets shown on Figure 11 through 14. The “Triangle-About” is inspired by the free-flowing, continuous circulation and organization found in standard round-abouts.

The following design elements are unique to the northern portion of the study area north of the new LRT Tecolote Station (Figures 11 and 12):

- Morena Boulevard is designed to have one traffic lane southbound and one lane northbound.
- Parallel parking is provided on the eastern side of Morena Boulevard between Jellet Street and Knoxville Street.
- A buffered Class 2 bike lane is included on the eastern side of Morena Boulevard between Jellet Street and Knoxville Street.
- A buffered multi-use trail is proposed on the west side of Morena Boulevard.
- A new standard intersection where Knoxville Street meets West Morena Boulevard.
- A trail is proposed along Tecolote Creek on the northern side of Tecolote Road between Morena Boulevard and West Morena Boulevard to provide pedestrian access.
- A new walkway on the southern side of Tecolote Road between Savannah Street and West Morena Boulevard provides pedestrian access.

Southern portion from the new Tecolote LRT Station down to the current Morena Split (Figures 13 and 14):

- West Morena Boulevard is designed to have one traffic lane southbound and one traffic lane northbound between Tecolote Road and the southern Morena split.
- Morena Boulevard is designed to have one traffic lane southbound and one traffic lane northbound between Tecolote Road and the southern Morena split.
- Morena Boulevard is designed to have two traffic lanes southbound between the southern Morena split and the southern boundary of the study area.
- Angled parking is provided on both sides of West Morena Boulevard between Vega Street and the southern Morena split.
- Tree pop-outs are included at every 4-5 angled parking spaces.
- A multi-use trail is proposed on the west side of Morena Boulevard.
- The southern Morena split is redesigned as a traditional intersection.
- A Cass II bike lane is proposed on the west side of Linda Vista Road and on both sides of Linda Vista Road north of Napa Street.
- New parking and green space is proposed on the eastern side of Morena Boulevard between the southern Morena Split and the Triangle-about for the existing businesses.
- Improvements on Morena between Tecolote Road and the southern Morena split include Class 2 bike lanes on both sides and a pedestrian mid-block crossing north of Dorcas Street.

Summary of the circulation being proposed by the Triangle-About (Figure 14):
The Triangle-About aims to improve circulation, safety, and comfort by reconfiguring the roadway and public right-of-way around the triangular parcel of land bordered by Napa Street, Morena Boulevard, and Linda Vista Road. Free-left turns and pedestrian-actuated crosswalks work together to create an efficient and safe mode of navigation. Some of the features include:

- Morena Boulevard south of Napa Street becomes one-way heading southbound.
- Provides more efficiently flowing traffic for motorists traveling southbound on Morena Boulevard and for those who need to connect to Linda Vista Road.
- Motorists traveling northbound on Morena Boulevard south of Linda Vista Road are directed onto Linda Vista Road and must navigate around the triangle-about to continue northbound on Morena Boulevard.
- Motorists traveling southbound on Linda Vista Road towards Morena Boulevard must turn right onto the triangle-about on Napa Street and can then continue northbound or southbound.
- The multi-use trail on the west side of Morena Boulevard comes to an end at the southern corner of the triangle-about. Pedestrians and cyclists who need to head northbound on Linda Vista Road can use the pedestrian/bicycle-actuated crosswalk to safely cross.
- Pedestrian-actuated crosswalks are located at each corner of the triangle-about.
- Entrances to the business inside of the triangle-about are maintained on each side.

E.3.3 Alternative 3: Lane Reductions w Roundabouts (Aggressive Circulation Alternative)

The design concept for this alternate focuses on the reconfiguration of the circulation of the southern Morena split and the triangular parcel of land bordered by Napa Street, Morena Boulevard, and Linda Vista Road. Please refer to the overview map on Figure 15, cross sections shown on Figures 16 and 17, and detail sheets shown on Figures 18 through 21. The efficient, free-flowing design of round-abouts will improve the circulation at these two locations, as well as provide new opportunities for green space and gateway/art installations.

The following design elements are unique to the northern portion of the study area north of the new LRT Tecolote Station (Figures 18 and 19):

- Morena Boulevard is designed to have two traffic lanes both southbound and northbound.
- Parallel parking is provided on the eastern side of Morena Boulevard between Jellet Street and Knoxville Street.
- Class 2 bike lanes are proposed on both sides of Morena Boulevard between Jellet Street and the Tecolote Station.

Southern portion from the new Tecolote LRT Station to the southern boundary of the study area (Figures 20 and 21):

- West Morena Boulevard is designed to have one traffic lane southbound and one traffic lane northbound between Tecolote Road and the southern Morena split.
- Morena Boulevard is designed to have one traffic lane southbound and one traffic lane northbound between Tecolote Road and the southern Morena split.
- Morena Boulevard is designed to have two traffic lanes southbound between the southern Morena split and the southern boundary of the study area.
- One of these lanes functions as a bypass lane through the round-abouts.
- Angled parking is provided on both sides of West Morena Boulevard between Vega Street and the southern Morena split.
- Tree pop-outs are included at every 4-5 angled parking spaces.
- A multi-use trail is proposed on the west side of Morena Boulevard
- A pedestrian-actuated crosswalk is proposed at the Morena Boulevard-Dorcas Street-Naples Street intersection.
- Additional parking and green space is proposed on the eastern side of Morena Boulevard between the two round-abouts for the existing businesses.

Summary of the circulation being proposed by the Round-About (Figure 21):

- Motorists travelling southbound on West Morena Boulevard and Morena Boulevard can take the bypass lane to continue southbound freely.
- Motorists needing to turn back or head towards Linda Vista Road can navigate through the round-about freely.
- This vehicular circulation also applies to motorists traveling northbound on Morena Boulevard and Naples Street.
- The multi-use trail on the west side of Morena Boulevard comes to an end at the Morena Boulevard-Linda Vista Road intersection. Pedestrians and cyclists who need to head northbound on Linda Vista Road use the pedestrian/bicycle actuated crosswalk to safely continue across.
- Pedestrian-actuated crosswalks are located around the round-abouts.

E.4 I-5 Bridge Crossing Options

The MBAP also addresses the existing issues that make the Tecolote and Clairemont I-5 freeway overpasses a challenge for pedestrians and cyclists to navigate. Three solutions are proposed for each bridge and include specific combinations of the following design elements:

E.4.1 Tecolote I-5 Crossings (Figure 22 Overview Map)

Option 1 (Figure 23)

- A five-foot Class 2 bike lane with a one and a half-foot striped buffer on the outside
- The existing walkway remains the same, but pedestrians benefit from greater separation from vehicular traffic as a result of the bike lane
- Two travel lanes westbound and eastbound

Option 2 (Figure 24)

- A five-foot Class 2 bike lane with a three-foot striped buffer on the outside
- The existing walkway remains the same, but pedestrians benefit from the new separation from vehicular traffic
- One travel lane westbound and two travel lanes eastbound

Option 3 (Figure 25)

- A five-foot Class 2 bike lane with a two-foot striped buffer on the outside
- Walkways are widened to eight feet
- One travel lane westbound and two travel lanes eastbound

E.4.2 Clairemont I-5 Crossings (Figure 26 Overview Map)

Option 1 (Figure 27)

- A five-foot Class 2 bike lane with a three-foot striped buffer on the outside
- The existing walkway remains the same, but pedestrians benefit from the new separation from vehicular traffic
- Two travel lanes northbound and southbound

Option 2 (Figure 28)

- A five-foot Class 2 bike lane with a three-foot striped buffer on both sides
- The bike lane heading westbound is placed to the left of right turn-only lanes
- Walkways are widened to eight feet
- Two travel lanes northbound and southbound

Option 3 (Figure 29)

- A painted and buffered multiuse path (Class 1) designed in the center median
- Walkways are widened to eight feet
- Two-travel lanes northbound and southbound

E.5 Community Input on the Alternative Concepts

Community Workshop 3 was held on November 12, 2013 at the San Diego Humane Society. The workshop summarized the findings and recommendations of the previous two workshops, and provided new information. The three land use and mobility concepts were formally presented, followed by table-top discussions.

In general, workshop attendees supported the goal of shifting some non-residential land uses to residential land uses, as long as a core of businesses were retained and enhanced to support the budding "design district" identity of the corridor. Attendees recognized the importance of increasing the level of development near the existing and proposed trolley stations as a means to direct growth away from established single-family neighborhoods and support long-term sustainability goals. There were varying opinions on the appropriate level of density near the stations, however. Some workshop attendees agreed that 60' in height was appropriate in certain locations, especially if it is "stepped back" as it approaches lower density development. Other attendees were adamant that the existing 30' height limit (in the Clairemont planning area) be enforced. Of particular concern to this group were blockage of views and the introduction of too much development in an already established neighborhood.

The following are key points and comments received from community members regarding the Land Use Alternatives:

- Several people requested to make sure building heights are restricted to a maximum of 30 feet to prevent view blockages.
- People overall agreed that higher density seems appropriate for this corridor, especially near Linda Vista Road due to the close proximity to USD.
- The idea of implementing a parking district along Morena Boulevard was supported.

The following are key points and comments received from community members regarding the Mobility Alternatives:

Alternative 1 (Figure 1)

- There is large community support for opening up Knoxville Street to Morena Boulevard.
- Support for making Morena-Napa Street-Sherman intersection into a standard intersection.
- People were concerned about the safety of cyclists on both bridges at each right turn lane.
- There was also concern about traffic backing up on the bridges due to the lane reductions.

Alternative 2 (Figure 8)

- People were concerned whether Ingulf Street would be able to handle the new traffic that would result from the station.
- Large support for the multi-use trail on the west side of Morena Boulevard.
- Large community support for opening up Knoxville Street to Morena Boulevard.
- There was some concern whether the "triangle-about" would be able to handle high traffic volumes and how easy would it be to navigate.
- Several people suggested using new green spaces for monumentation/gateways.

Alternative 3 (Figure 15)

- Large community support for opening up Knoxville Street to Morena Boulevard.
- The multi-use trail in the center median on Clairemont Drive had mixed reviews.
- The round-abouts also had mixed reviews. Some people thought it was a great idea, others thought it would be too confusing
- Large support for the Class 2 bike facilities

E.5.1 Documentation of Decisions

Land Use Scenarios

Discussions on the recommended land use scenarios are discussed in other portions of this document. In general, however, it was felt that a moderately aggressive land use scenario would be the best to consider for refinement. The initial modeling done for traffic generation was based upon the moderately aggressive land use scenario in terms of location of land use changes and intensification. The initial intensity of new development looked at in this model matched that of the aggressive land use scenario. However, after initial model runs and further review by city staff, the intensity was dropped back to levels closer to the moderately aggressive scenario. Review the other sections of the document, including Section 1.3.1, to obtain a better sense of the final recommended land use plan.

Additional Variations of the Workshop Alternatives

In an effort to work through some potential benefits to on-street parking and to reconfigurations around the transit stations, some additional concept refinement was conducted prior to the recommended plans (Figure 34). These efforts focused on providing on-street parking for the transit stations and angled parking in the business districts. There was also a variation in the roadway geometry directly next to the Clairemont station platforms, as well as variations at the Tecolote station.

The refined alternatives located at the Clairemont station looked at dropping a lane of travel southbound, and providing a greater width at the station platform, which is currently proposed to have a protection wall since the platform extends to the curb edge, which has a travel lane currently in this location (see Figures 30 through 33). The dropping of the travel lane allows for a walkway, fence and tree buffer to be placed in this area making the station platform and adjacent pedestrian circulation work better. The other variations considered did not work as well as Figure 33.

Mobility Alternative Options Analyzed at the North End of the Study Area

The alternative that was refined into the recommended plan discussed below was that of the Conservative Alternative (See Section 1 on Figure 3). This version captures some capacity of the excess roadway and makes it available for other uses. Southbound travel lanes are reduced to one travel lane while northbound travel remains at two. The final recommended alternative is also based on a variation of Figure 35, except that it also includes a full width multi use path. The circulation alternative for North Morena Boulevard shown in the moderate alternative was determined to not be feasible due to a requirement that emergency vehicles need a minimum passing requirement of 20' between raised medians and parked vehicles or curbs (See Section 1 on Figure 10 and Figure 36). The aggressive alternative (actually conservative approach for mobility in order to support an aggressive land use alternative) was determined to not obtain enough benefits for other uses and did not address some of the community requested features (See Section 1 on Figure 17). This alternative is close to the current condition, with the addition of bike lanes created out of lane width reductions (Figure 37).

Mobility Alternative Options Analyzed at the South End of the Study Area

Located a few blocks just south of the Clairemont station, a potential exists for providing on-street parking to service the station (see Figures 34). The same applies to the Tecolote station (see Figure 38). MTS as the transit authority does have pre-emptive rights to the public right-of-way for transportation purposes. If they wanted to use some of

the excess public right-of-way for parking, they do have the jurisdictional authority to do so. However, after careful site planning and roadway geometry layout, it was determined that the variation in lane markings, cross intersection lane line ups and the limited amount of parking generated was not worth the expense or right-of-way to recommend inclusion in the final plans. Also, SANDAG / MTS indicated that the on-street parking would not entice them to lower their off-street parking requirements. One of the goals of this alternative is to accommodate some of the transit station parking on the street, and to allow less of the nearby development capacity for transit oriented development to be taken up by Mid-Coast surface parking lots. Without the commitment to reserve these off-site areas for future development (or at least some of these areas), the goal was not attained and therefore this alternative was dropped form further consideration. It has been included here in case the benefits (parking capacity, traffic calming through a chicane arrangement of lanes, protection for the adjacent Class 1 multi-use path) were considered to be important enough to continue to pursue or if SANDAG / MTS decided to lower their off-street parking needs. The actual recommended plan took a variation of this concept by adding drop-off zones, kiss and rides, 15 minute waiting zones and taxi-zones along the east and west sides nearest the Clairemont and Tecolote stations.

A third area of concept refinement occurred south of the Tecolote station, south of Vega Street (see Figure 38 through 40). The original intent of some of the concepts was to allow for angled parking along the east side of West Morena near the design district (Figure 38 and 39). This would substantially increase the amount of available parking that would in turn allow reinvestment in the existing development without having to be brought up to current parking code requirements. The businesses would pay into a parking management district fund run by local stakeholders. If they cannot meet parking standards on their small lots and or make a structured parking solution work due to small lot dimensions, they would pay an in-lieu parking fee equivalent to the cost of a structured parking space for each parking space they would normally be required to provide. This approach also allows for parking strategies where some customers and employees would be able to park once and walk to several destinations. These spaces could also be metered and money collected would be partially available to the parking district to reinvest in circulation improvements in the Morena Design District area. However, the City of San Diego expressed concern over the ability to fit a bike lane and angle parking through this area. Solutions included the use of sharrows in the outer lane of the two lane road heading northbound on West Morena. Another solution included a “green back” painted sharrow lane (Figure 39), similar to what was done in a business district in Long Beach. However, the city’s stance on these solutions is that they did not want to pursue a sharrow or sharrow lane solution, so this alternative was dropped and parallel parking is now proposed as part of the recommended plan (Figure 40).

None of the three alternative street configurations represented in the workshops were carried through without major change into the recommended phase. Traffic modeling and detailed analysis determined that none of the three would work efficiently and provide enough benefits compared to the costs. The conservative scenario was too conservative and continued to have level of service failures at the triangle. The right angle “T” did work well at the current Morena south end split. The Knoxville connection at West Morena worked adequately and was moved forward into the recommended plan.

The “triangle-about” (Figure 14) and the “round-about” (Figure 21) versions of roadway adjustments did not completely resolve the congestion problems associated with traffic flow in the area. The recommended plan uses the idea of the “triangle-about” as the mid-term solution (although it is two way), but replaces several streets in the south study area with a distributed grid network that allows for the bypassing of through traffic that is freeway bound at Tecolote Road and I-5, to take a more direct path to this location instead of going through the congested Napa / Linda Vista / Morena triangle congestion point.

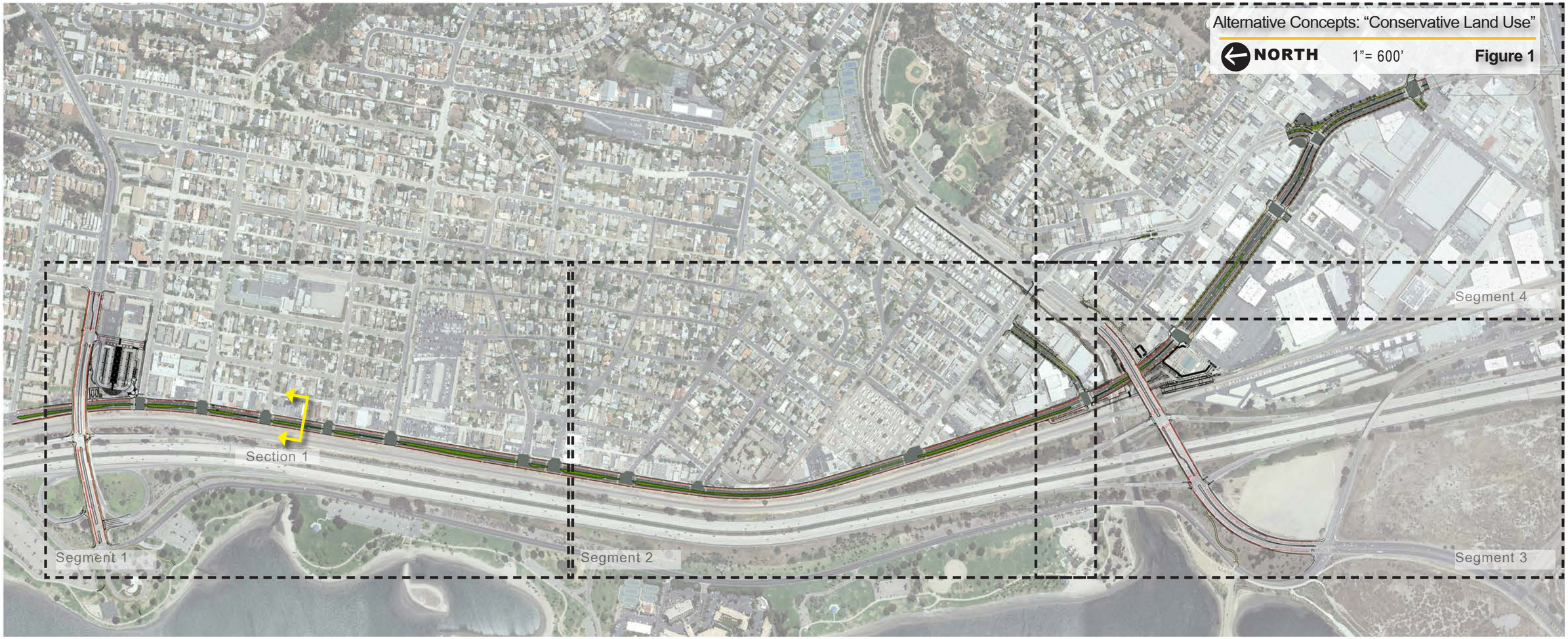

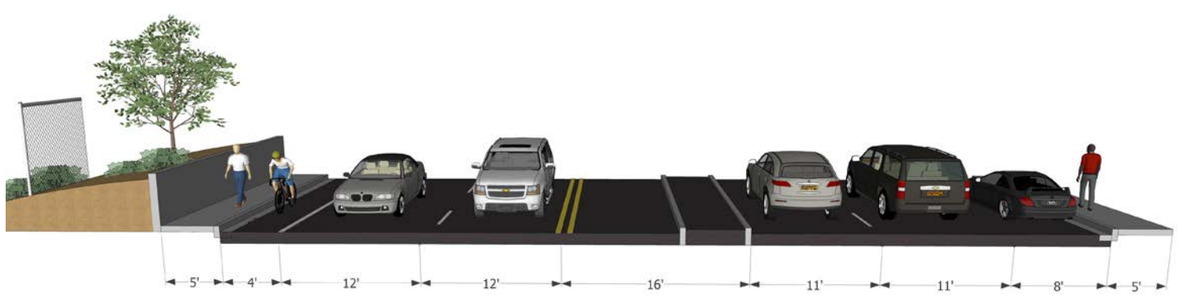

Figure 2 **Existing Section 1:** North Morena Boulevard

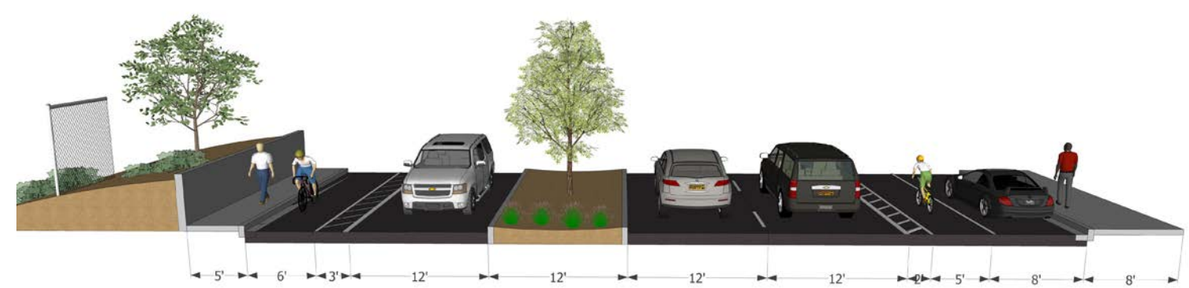

Figure 3 **Proposed Section 1:** North Morena Boulevard

Morena Blvd Station Area Planning Study

"Conservative Land Use": Segment 1
NORTH
1"= 200'
Figure 4
Morena Blvd Station Area Planning Study
Vehicular Improvements
1 Road diet (drop a lane)
2 Lane diet (narrow a lane)
3 New roadway
4 Close road or reclaim space
5 Drop-off zone / 15 minute zone
6 New driveway / curbcut
7 On-street parking
8 New traffic signal
Pedestrian Improvements
1 Enhanced crosswalk
2 Curb extension
3 Median refuge
4 Count-down pedestrian signals
5 Rectangular Rapid Flashing Beacon
6 HAWK crossing
7 Widened walkway
8 Enhanced double tree lined path
Bike Improvements
1 Class 1 multi-use path
2 Class 2 standard bike lane
3 Class 2 buffered bike lane
4 Class 3 route
5 Sharrows
6 Painted green cross over lane
7 Bike crosswalk
8 Jug handle (left turn for bikes)
Design Improvements
1 Raised median with no planting
2 Raised median with planting
3 Bio-swales
4 Street furnishings
5 Trees with tree grates
6 Trees in median
7 Trees in parkway strip
8 Entry monumentation / wayfinding

"Conservative Land Use": Segment 2
NORTH
1"= 200'
Figure 5
Morena Blvd Station Area Planning Study
Undercrossing
Vehicular Improvements
1 Road diet (drop a lane)
2 Lane diet (narrow a lane)
3 New roadway
4 Close road or reclaim space
5 Drop-off zone / 15 minute zone
6 New driveway / curbcut
7 On-street parking
8 New traffic signal
Pedestrian Improvements
1 Enhanced crosswalk
2 Curb extension
3 Median refuge
4 Count-down pedestrian signals
5 Rectangular Rapid Flashing Beacon
6 HAWK crossing
7 Widened walkway
8 Enhanced double tree lined path
Bike Improvements
1 Class 1 multi-use path
2 Class 2 standard bike lane
3 Class 2 buffered bike lane
4 Class 3 route
5 Sharrows
6 Painted green cross over lane
7 Bike crosswalk
8 Jug handle (left turn for bikes)
Design Improvements
1 Raised median with no planting
2 Raised median with planting
3 Bio-swales
4 Street furnishings
5 Trees with tree grates
6 Trees in median
7 Trees in parkway strip
8 Entry monumentation / wayfinding

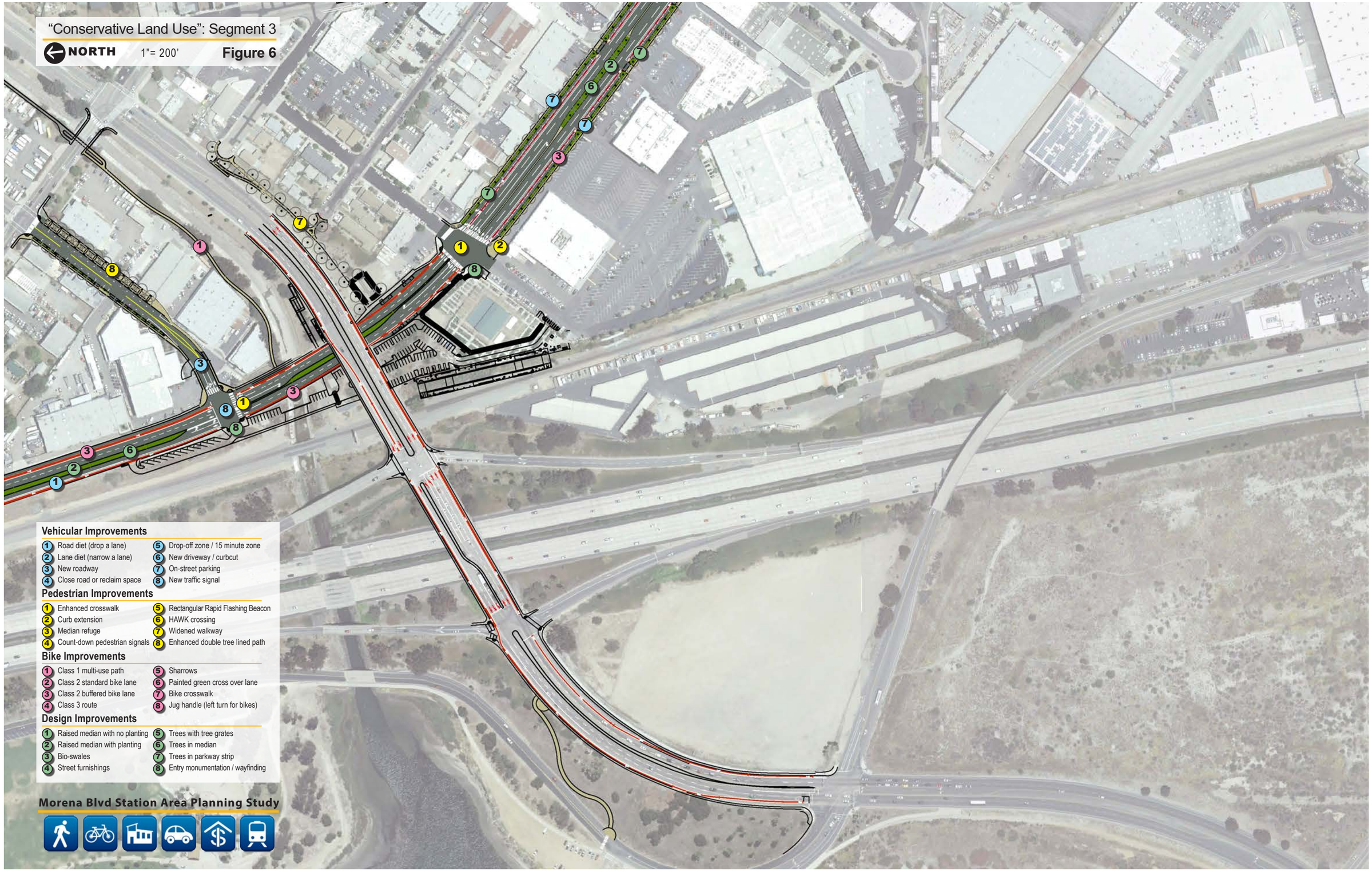
"Conservative Land Use": Segment 3
NORTH
1"= 200'
Figure 6
Vehicular Improvements
1 Road diet (drop a lane)
2 Lane diet (narrow a lane)
3 New roadway
4 Close road or reclaim space
5 Drop-off zone / 15 minute zone
6 New driveway / curbcut
7 On-street parking
8 New traffic signal
Pedestrian Improvements
1 Enhanced crosswalk
2 Curb extension
3 Median refuge
4 Count-down pedestrian signals
5 Rectangular Rapid Flashing Beacon
6 HAWK crossing
7 Widened walkway
8 Enhanced double tree lined path
Bike Improvements
1 Class 1 multi-use path
2 Class 2 standard bike lane
3 Class 2 buffered bike lane
4 Class 3 route
5 Sharrows
6 Painted green cross over lane
7 Bike crosswalk
8 Jug handle (left turn for bikes)
Design Improvements
1 Raised median with no planting
2 Raised median with planting
3 Bio-swales
4 Street furnishings
5 Trees with tree grates
6 Trees in median
7 Trees in parkway strip
8 Entry monumentation / wayfinding
Morena Blvd Station Area Planning Study

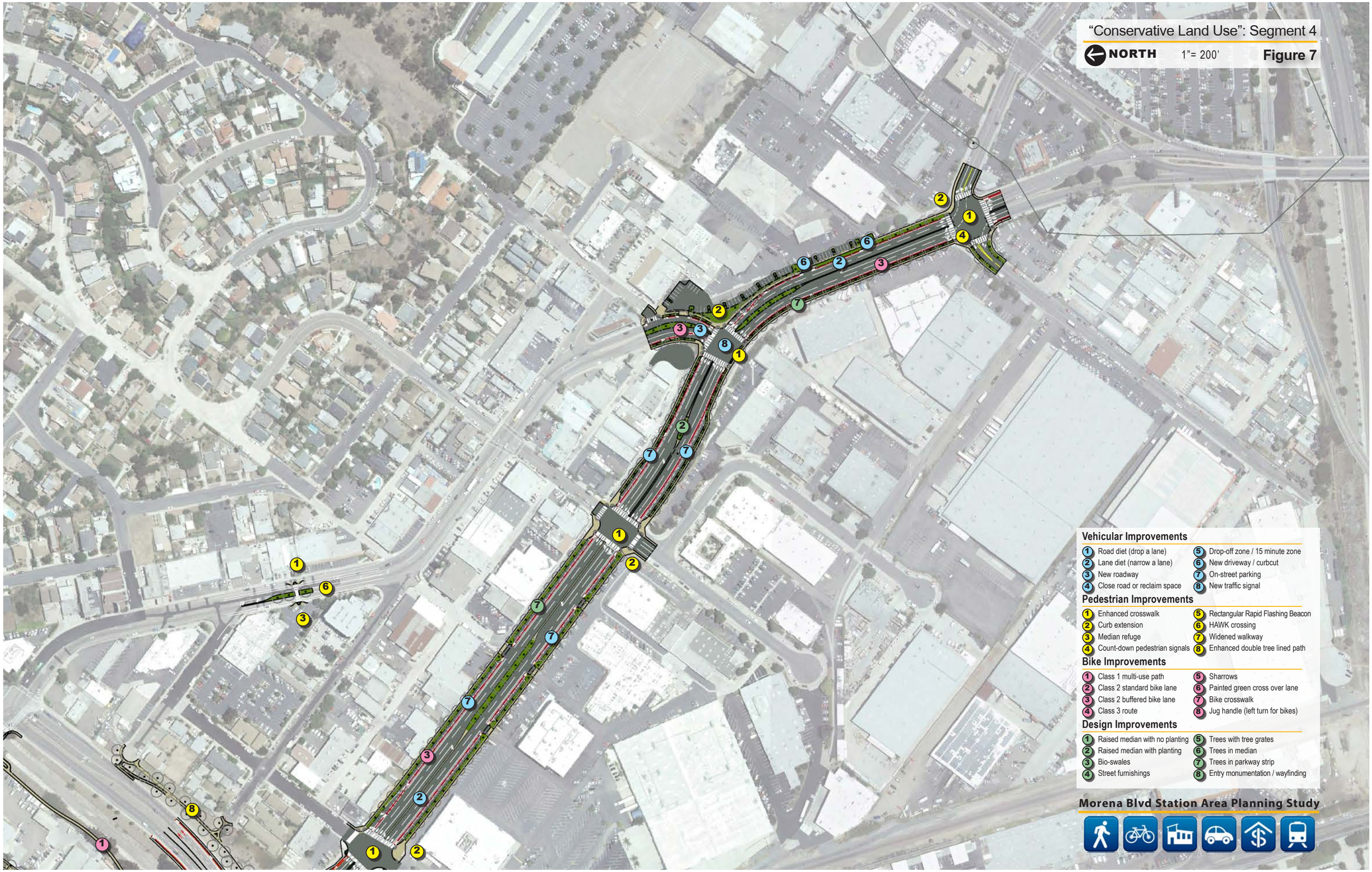
"Conservative Land Use": Segment 4
NORTH
1"= 200'
Figure 7
Vehicular Improvements
1 Road diet (drop a lane)
2 Lane diet (narrow a lane)
3 New roadway
4 Close road or reclaim space
5 Drop-off zone / 15 minute zone
6 New driveway / curbcut
7 On-street parking
8 New traffic signal
Pedestrian Improvements
1 Enhanced crosswalk
2 Curb extension
3 Median refuge
4 Count-down pedestrian signals
5 Rectangular Rapid Flashing Beacon
6 HAWK crossing
7 Widened walkway
8 Enhanced double tree lined path
Bike Improvements
1 Class 1 multi-use path
2 Class 2 standard bike lane
3 Class 2 buffered bike lane
4 Class 3 route
5 Sharrows
6 Painted green cross over lane
7 Bike crosswalk
8 Jug handle (left turn for bikes)
Design Improvements
1 Raised median with no planting
2 Raised median with planting
3 Bio-swales
4 Street furnishings
5 Trees with tree grates
6 Trees in median
7 Trees in parkway strip
8 Entry monumentation / wayfinding
Morena Blvd Station Area Planning Study

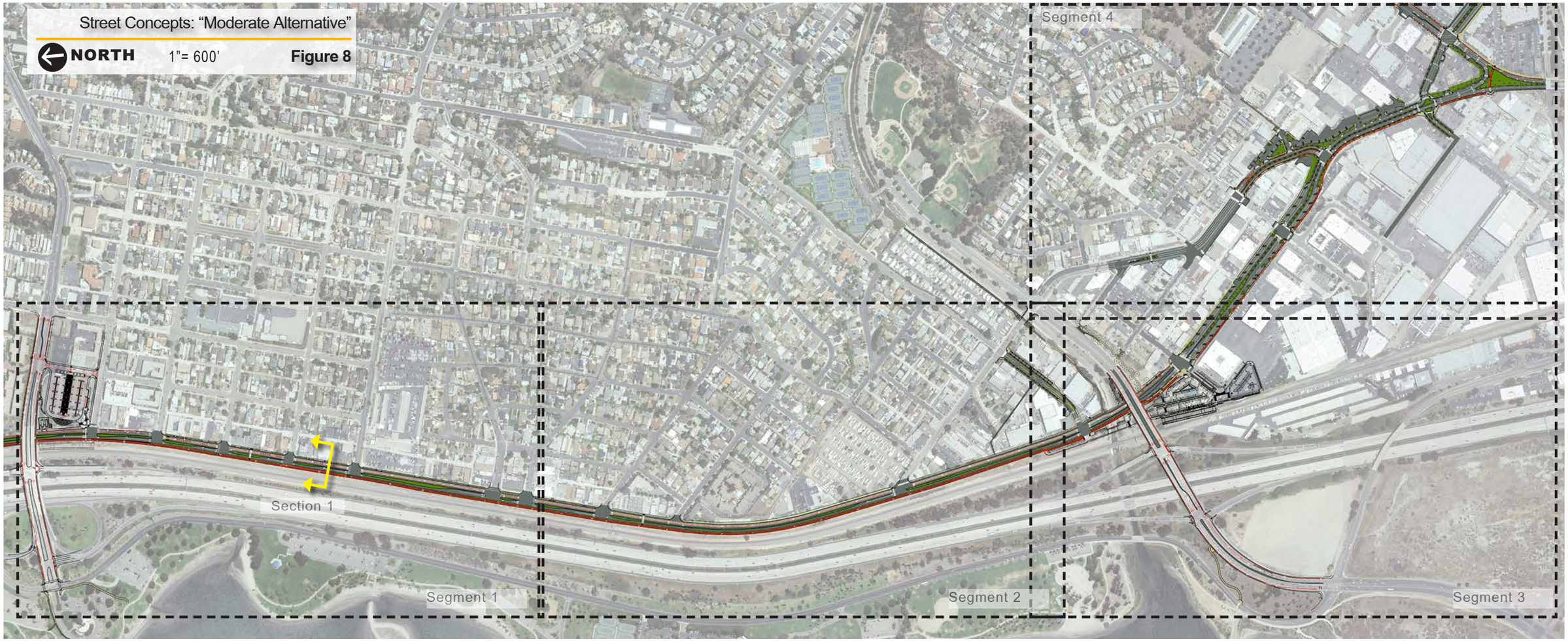

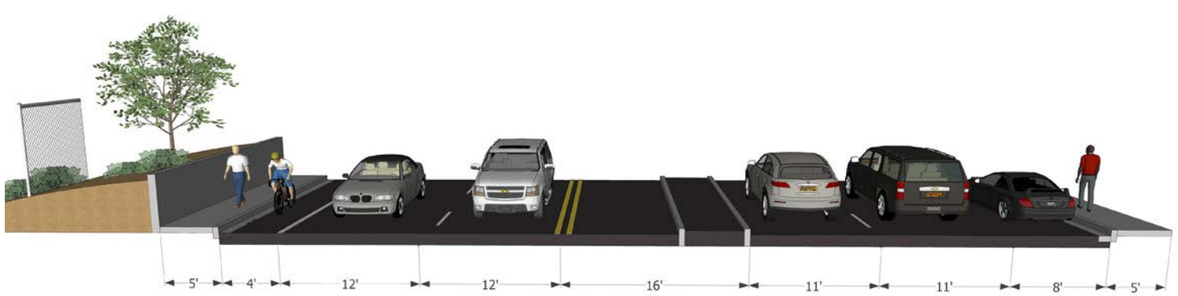

Figure 9 **Existing Section 1:** North Morena Boulevard

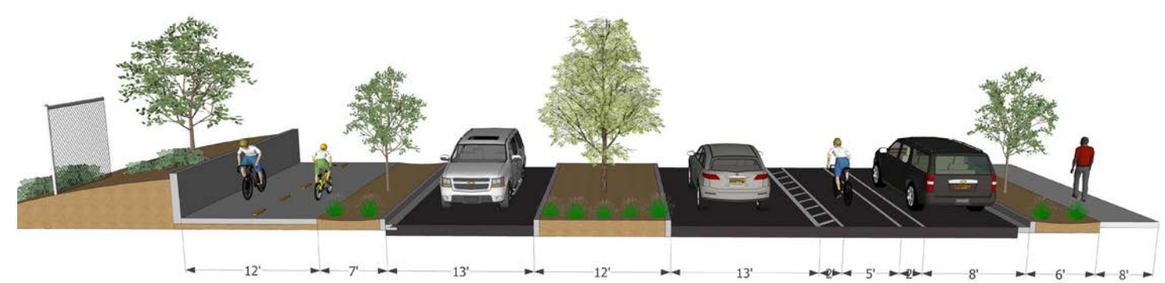

Figure 10 **Proposed Section 1:** North Morena Boulevard

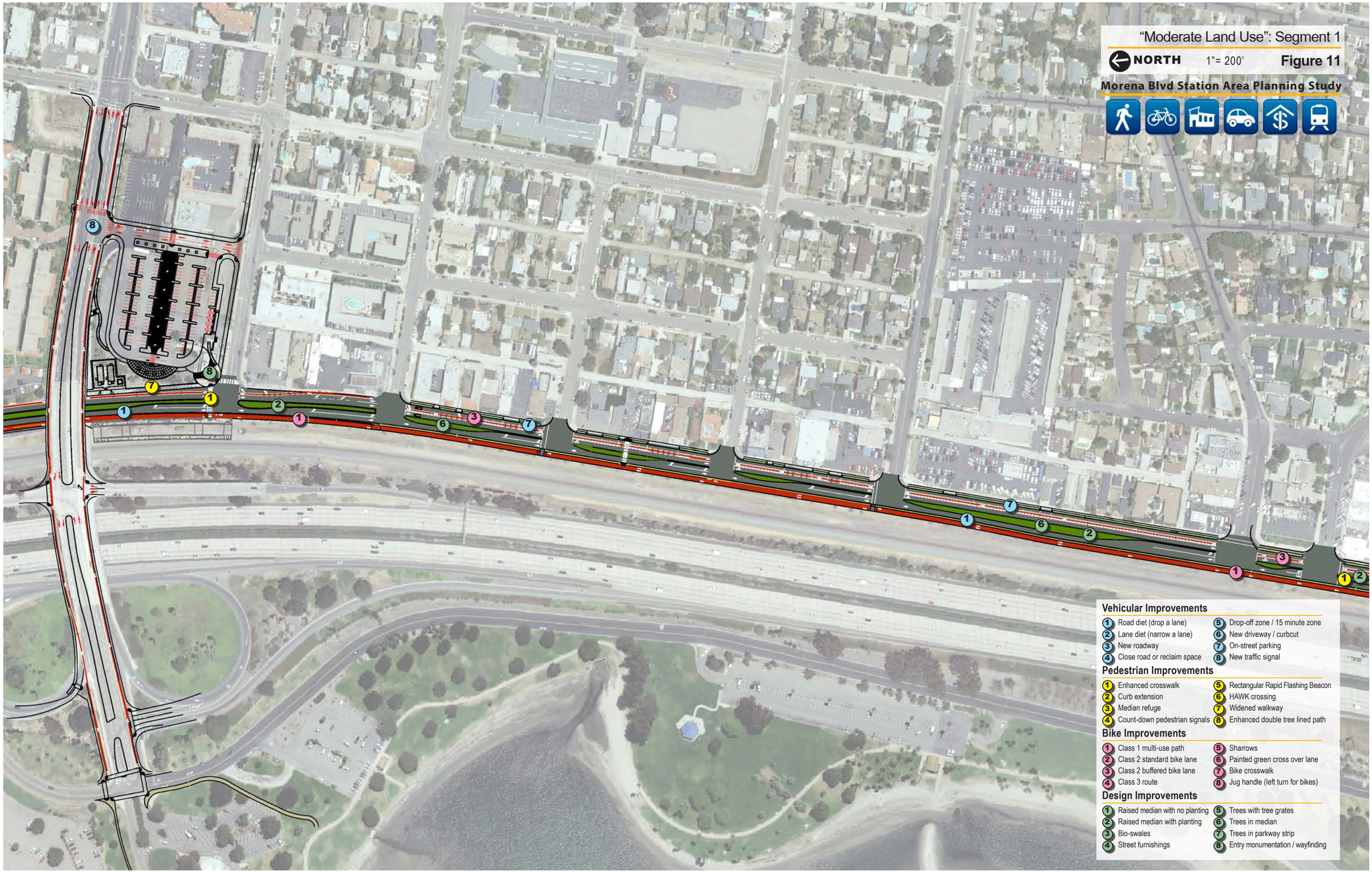
"Moderate Land Use": Segment 1
NORTH
1"= 200'
Figure 11
Morena Blvd Station Area Planning Study
Vehicular Improvements
1 Road diet (drop a lane)
2 Lane diet (narrow a lane)
3 New roadway
4 Close road or reclaim space
5 Drop-off zone / 15 minute zone
6 New driveway / curbcut
7 On-street parking
8 New traffic signal
Pedestrian Improvements
1 Enhanced crosswalk
2 Curb extension
3 Median refuge
4 Count-down pedestrian signals
5 Rectangular Rapid Flashing Beacon
6 HAWK crossing
7 Widened walkway
8 Enhanced double tree lined path
Bike Improvements
1 Class 1 multi-use path
2 Class 2 standard bike lane
3 Class 2 buffered bike lane
4 Class 3 route
5 Sharrows
6 Painted green cross over lane
7 Bike crosswalk
8 Jug handle (left turn for bikes)
Design Improvements
1 Raised median with no planting
2 Raised median with planting
3 Bio-swales
4 Street furnishings
5 Trees with tree grates
6 Trees in median
7 Trees in parkway strip
8 Entry monumentation / wayfinding

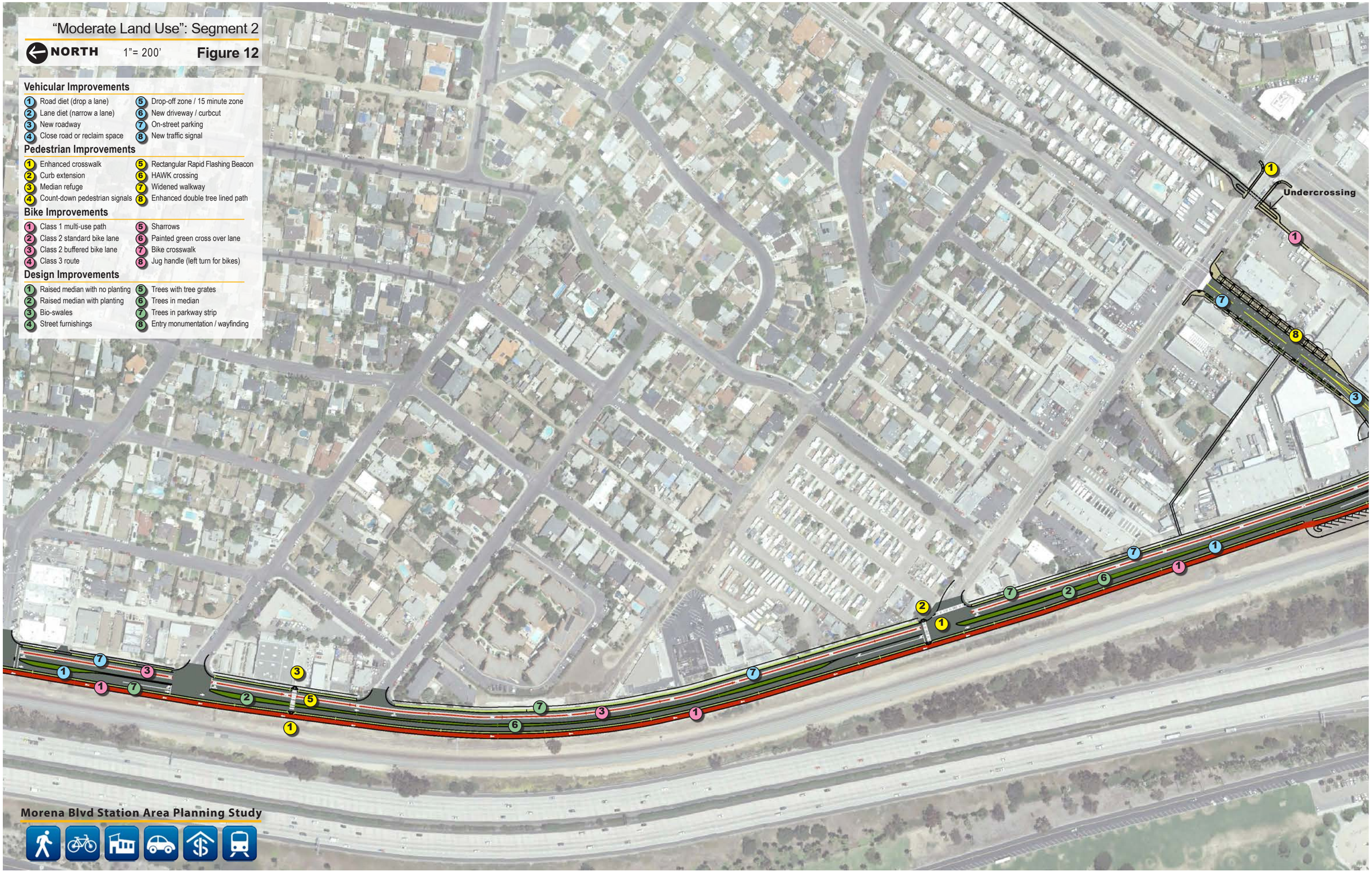
"Moderate Land Use": Segment 2
NORTH
1"= 200'
Figure 12
Vehicular Improvements
1 Road diet (drop a lane)
2 Lane diet (narrow a lane)
3 New roadway
4 Close road or reclaim space
5 Drop-off zone / 15 minute zone
6 New driveway / curbcut
7 On-street parking
8 New traffic signal
Pedestrian Improvements
1 Enhanced crosswalk
2 Curb extension
3 Median refuge
4 Count-down pedestrian signals
5 Rectangular Rapid Flashing Beacon
6 HAWK crossing
7 Widened walkway
8 Enhanced double tree lined path
Bike Improvements
1 Class 1 multi-use path
2 Class 2 standard bike lane
3 Class 2 buffered bike lane
4 Class 3 route
5 Sharrows
6 Painted green cross over lane
7 Bike crosswalk
8 Jug handle (left turn for bikes)
Design Improvements
1 Raised median with no planting
2 Raised median with planting
3 Bio-swales
4 Street furnishings
5 Trees with tree grates
6 Trees in median
7 Trees in parkway strip
8 Entry monumentation / wayfinding
Undercrossing
Morena Blvd Station Area Planning Study

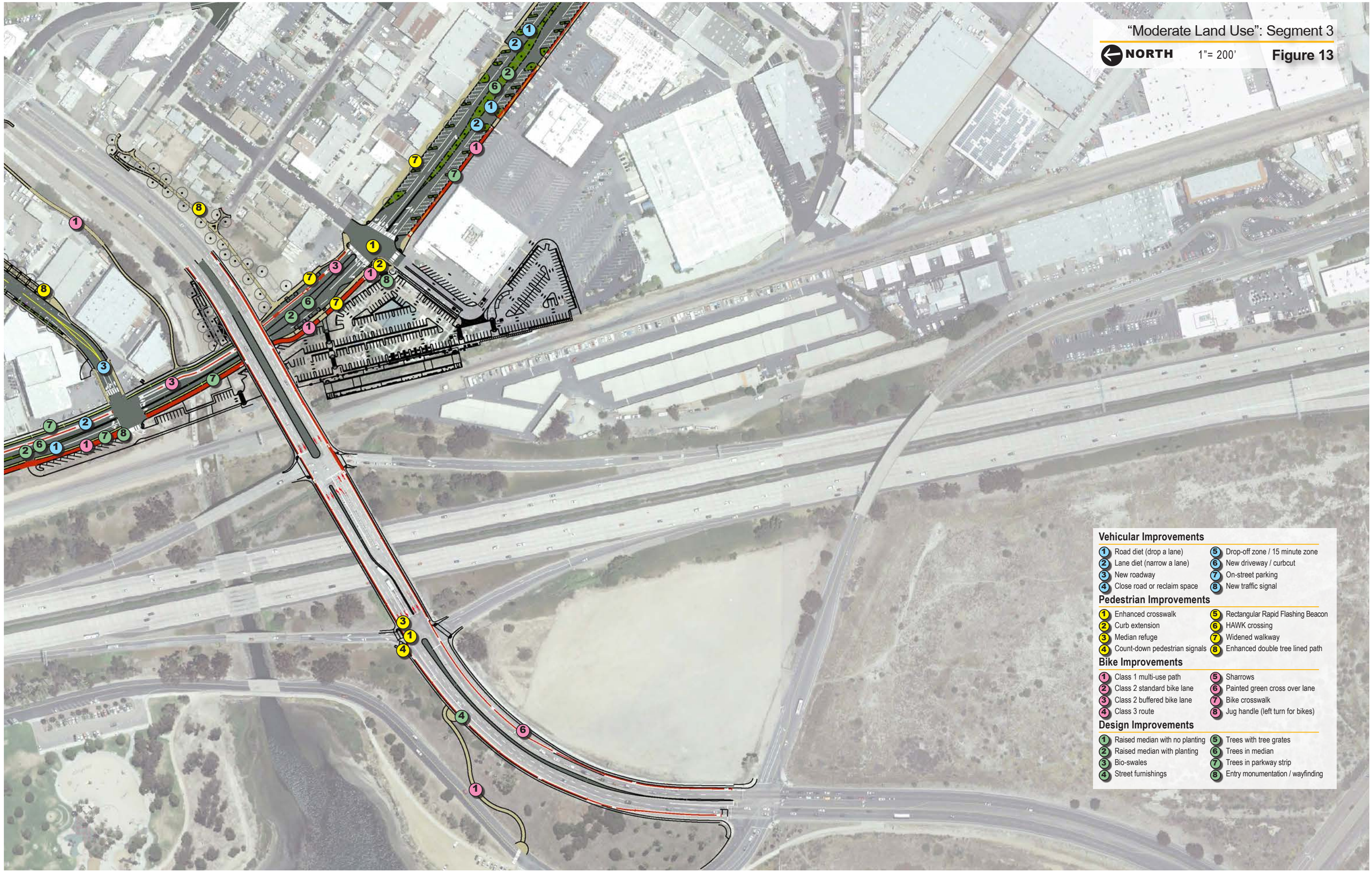
"Moderate Land Use": Segment 3
NORTH
1"= 200'
Figure 13
Vehicular Improvements
1 Road diet (drop a lane)
2 Lane diet (narrow a lane)
3 New roadway
4 Close road or reclaim space
5 Drop-off zone / 15 minute zone
6 New driveway / curbcut
7 On-street parking
8 New traffic signal
Pedestrian Improvements
1 Enhanced crosswalk
2 Curb extension
3 Median refuge
4 Count-down pedestrian signals
5 Rectangular Rapid Flashing Beacon
6 HAWK crossing
7 Widened walkway
8 Enhanced double tree lined path
Bike Improvements
1 Class 1 multi-use path
2 Class 2 standard bike lane
3 Class 2 buffered bike lane
4 Class 3 route
5 Sharrows
6 Painted green cross over lane
7 Bike crosswalk
8 Jug handle (left turn for bikes)
Design Improvements
1 Raised median with no planting
2 Raised median with planting
3 Bio-swales
4 Street furnishings
5 Trees with tree grates
6 Trees in median
7 Trees in parkway strip
8 Entry monumentation / wayfinding

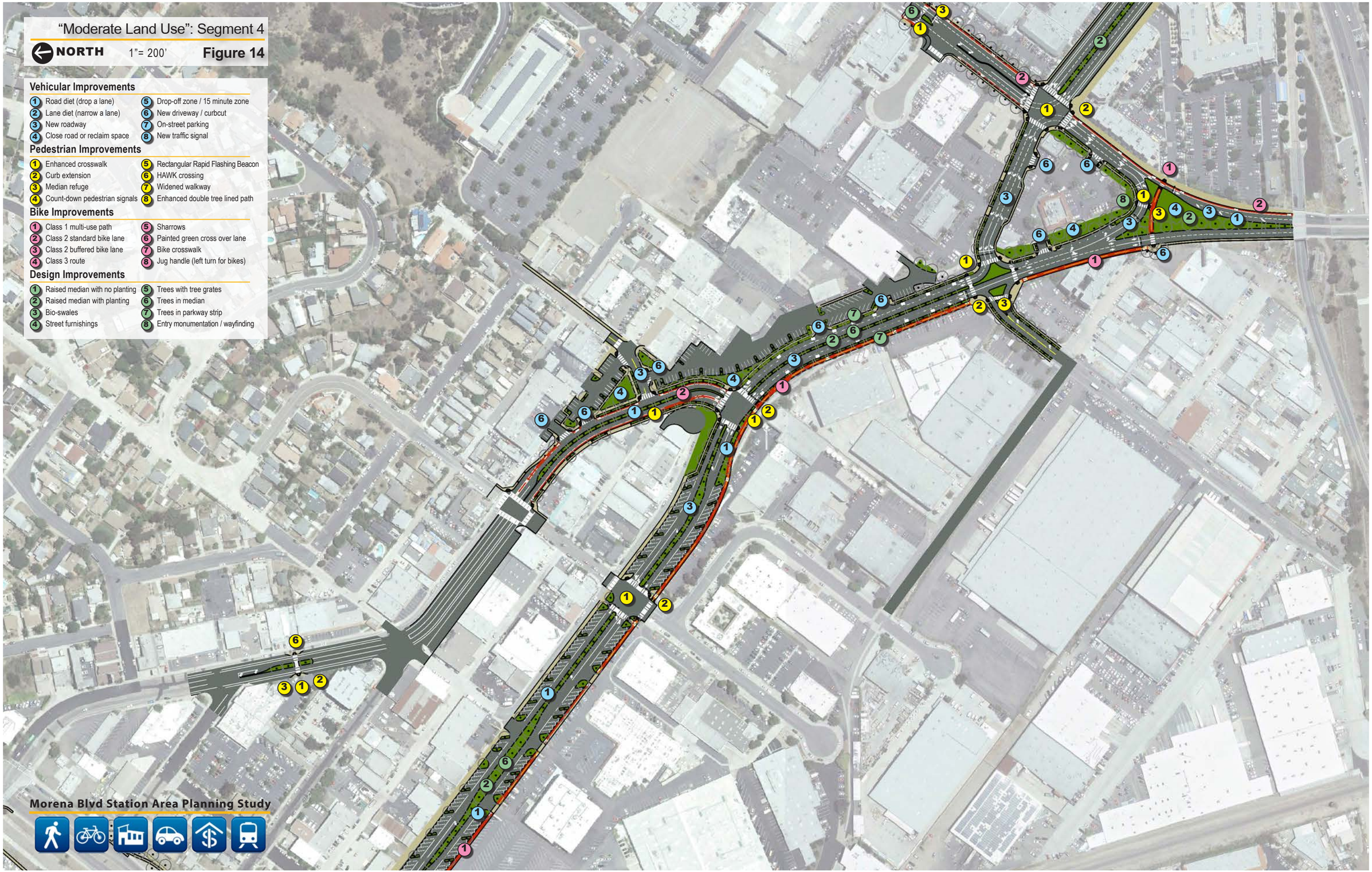
"Moderate Land Use": Segment 4
NORTH
1"= 200'
Figure 14
Vehicular Improvements
1 Road diet (drop a lane)
2 Lane diet (narrow a lane)
3 New roadway
4 Close road or reclaim space
5 Drop-off zone / 15 minute zone
6 New driveway / curbcut
7 On-street parking
8 New traffic signal
Pedestrian Improvements
1 Enhanced crosswalk
2 Curb extension
3 Median refuge
4 Count-down pedestrian signals
5 Rectangular Rapid Flashing Beacon
6 HAWK crossing
7 Widened walkway
8 Enhanced double tree lined path
Bike Improvements
1 Class 1 multi-use path
2 Class 2 standard bike lane
3 Class 2 buffered bike lane
4 Class 3 route
5 Sharrows
6 Painted green cross over lane
7 Bike crosswalk
8 Jug handle (left turn for bikes)
Design Improvements
1 Raised median with no planting
2 Raised median with planting
3 Bio-swales
4 Street furnishings
5 Trees with tree grates
6 Trees in median
7 Trees in parkway strip
8 Entry monumentation / wayfinding
Morena Blvd Station Area Planning Study

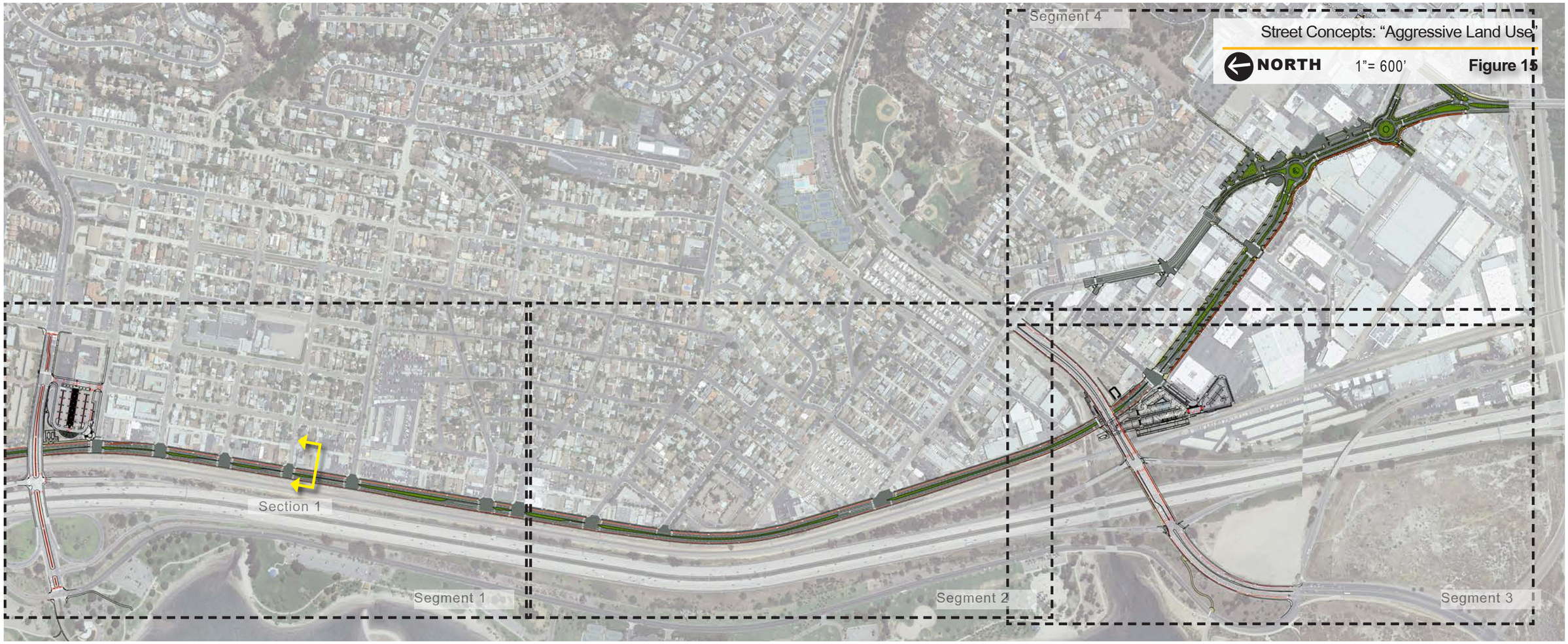

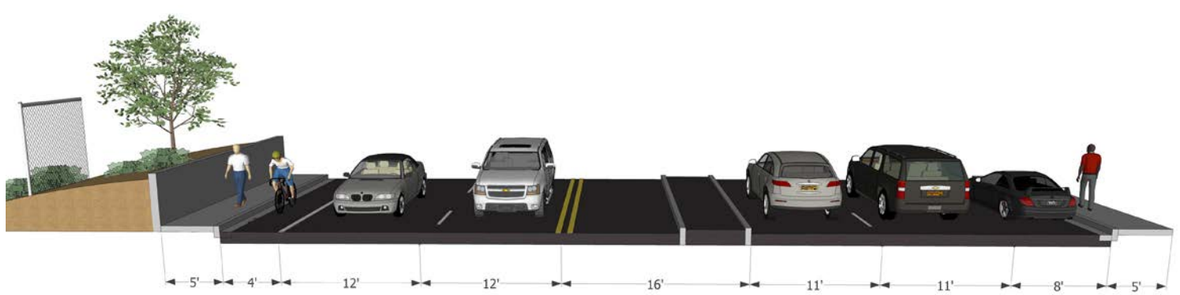

Figure 16 **Existing Section 1:** North Morena Boulevard

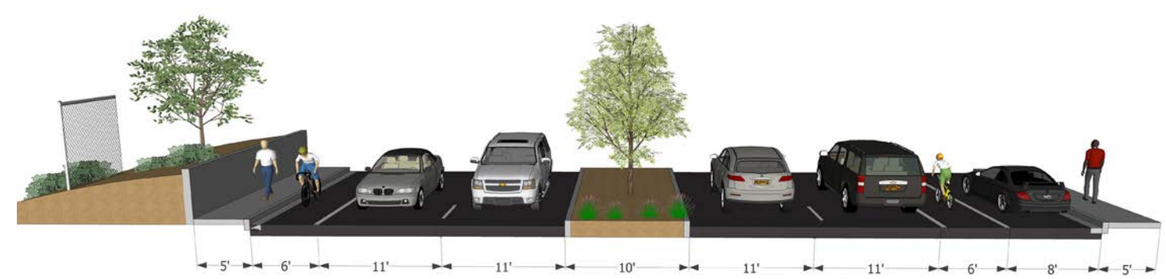

Figure 17 **Proposed Section 1:** North Morena Boulevard

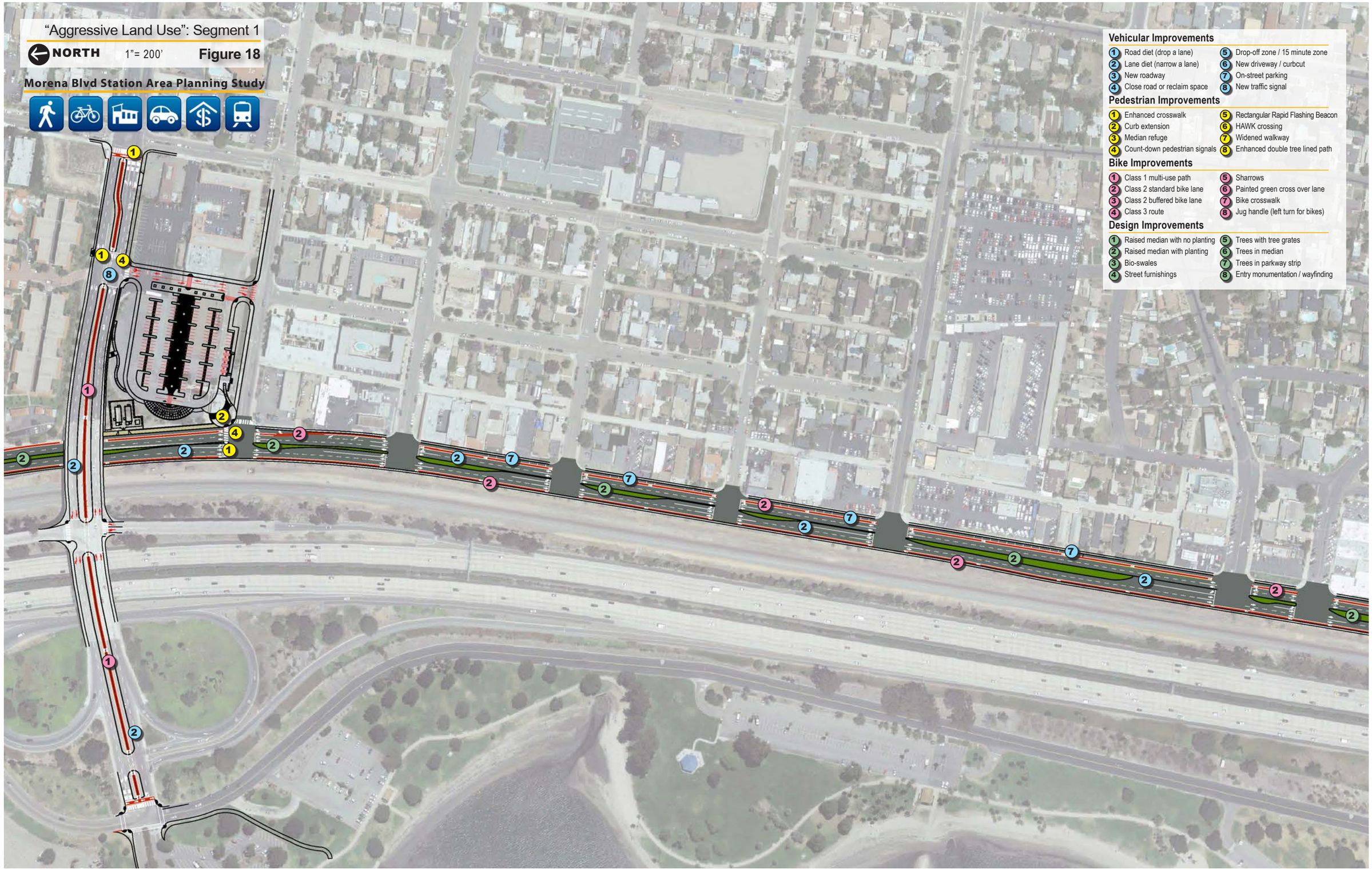
"Aggressive Land Use": Segment 1
NORTH
1"= 200'
Figure 18
Morena Blvd Station Area Planning Study
Vehicular Improvements
1 Road diet (drop a lane)
2 Lane diet (narrow a lane)
3 New roadway
4 Close road or reclaim space
5 Drop-off zone / 15 minute zone
6 New driveway / curbcut
7 On-street parking
8 New traffic signal
Pedestrian Improvements
1 Enhanced crosswalk
2 Curb extension
3 Median refuge
4 Count-down pedestrian signals
5 Rectangular Rapid Flashing Beacon
6 HAWK crossing
7 Widened walkway
8 Enhanced double tree lined path
Bike Improvements
1 Class 1 multi-use path
2 Class 2 standard bike lane
3 Class 2 buffered bike lane
4 Class 3 route
5 Sharrows
6 Painted green cross over lane
7 Bike crosswalk
8 Jug handle (left turn for bikes)
Design Improvements
1 Raised median with no planting
2 Raised median with planting
3 Bio-swales
4 Street furnishings
5 Trees with tree grates
6 Trees in median
7 Trees in parkway strip
8 Entry monumentation / wayfinding

"Aggressive Land Use": Segment 2

Figure 19

Morena Blvd Station Area Planning Study

Vehicular Improvements
1 Road diet (drop a lane)
2 Lane diet (narrow a lane)
3 New roadway
4 Close road or reclaim space
5 Drop-off zone / 15 minute zone
6 New driveway / curbcut
7 On-street parking
8 New traffic signal
Pedestrian Improvements
1 Enhanced crosswalk
2 Curb extension
3 Median refuge
4 Count-down pedestrian signals
5 Rectangular Rapid Flashing Beacon
6 HAWK crossing
7 Widened walkway
8 Enhanced double tree lined path
Bike Improvements
1 Class 1 multi-use path
2 Class 2 standard bike lane
3 Class 2 buffered bike lane
4 Class 3 route
5 Sharrows
6 Painted green cross over lane
7 Bike crosswalk
8 Jug handle (left turn for bikes)
Design Improvements
1 Raised median with no planting
2 Raised median with planting
3 Bio-swales
4 Street furnishings
5 Trees with tree grates
6 Trees in median
7 Trees in parkway strip
8 Entry monumentation / wayfinding
"Aggressive Land Use": Segment 3
NORTH
1"= 200'
Figure 20
Morena Blvd Station Area Planning Study

"Aggressive Land Use": Segment 4
NORTH
1"= 200'
Figure 21
Morena Blvd Station Area Planning Study
Vehicular Improvements
1 Road diet (drop a lane)
2 Lane diet (narrow a lane)
3 New roadway
4 Close road or reclaim space
5 Drop-off zone / 15 minute zone
6 New driveway / curbcut
7 On-street parking
8 New traffic signal
Pedestrian Improvements
1 Enhanced crosswalk
2 Curb extension
3 Median refuge
4 Count-down pedestrian signals
5 Rectangular Rapid Flashing Beacon
6 HAWK crossing
7 Widened walkway
8 Enhanced double tree lined path
Bike Improvements
1 Class 1 multi-use path
2 Class 2 standard bike lane
3 Class 2 buffered bike lane
4 Class 3 route
5 Sharrows
6 Painted green cross over lane
7 Bike crosswalk
8 Jug handle (left turn for bikes)
Design Improvements
1 Raised median with no planting
2 Raised median with planting
3 Bio-swales
4 Street furnishings
5 Trees with tree grates
6 Trees in median
7 Trees in parkway strip
8 Entry monumentation / wayfinding

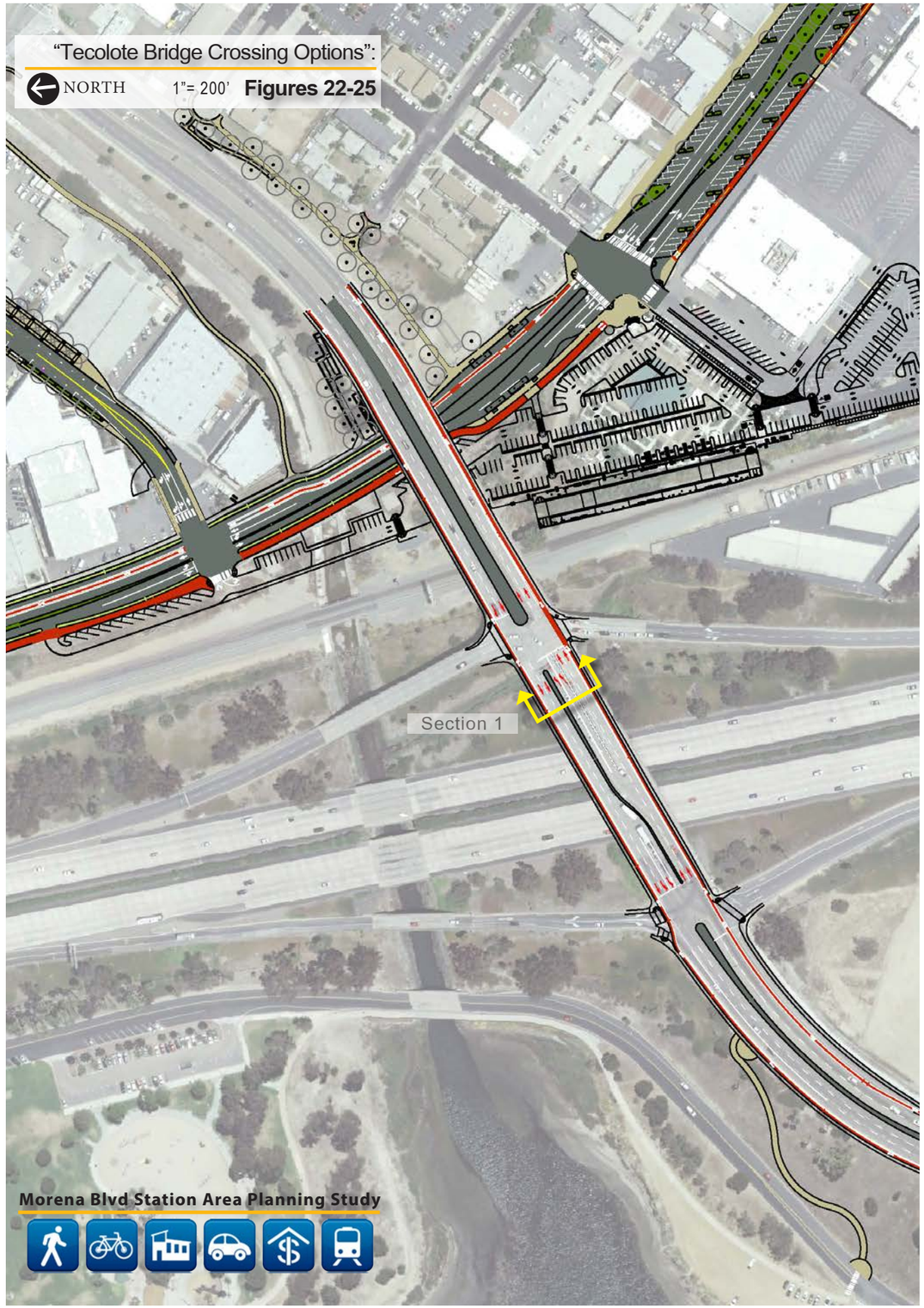

Figure 22: Plan View of Tecolote Bridge Crossing Improvements

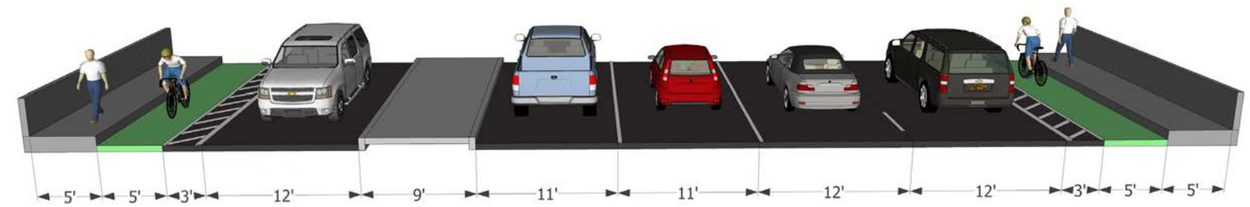

Figure 23: Single Thru Lane, Buffered Bike Lane with Bike / Ped Phase & no Turn on Red **Proposed Section 1:** Tecolote Bridge

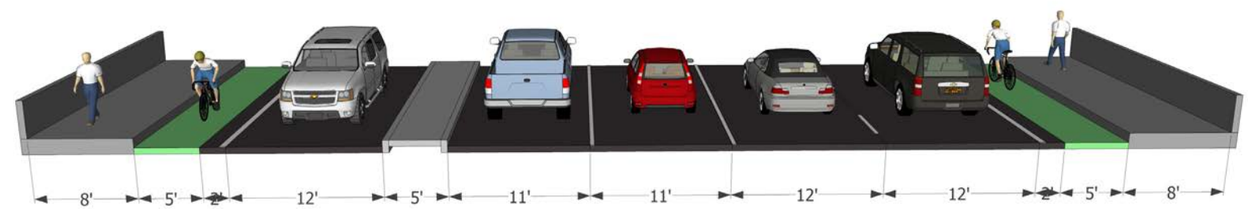

Figure 24: Single Thru Lane, Bike Lane, Painted Lane Crossovers, & Widened Walkway **Proposed Section 1:** Tecolote Bridge

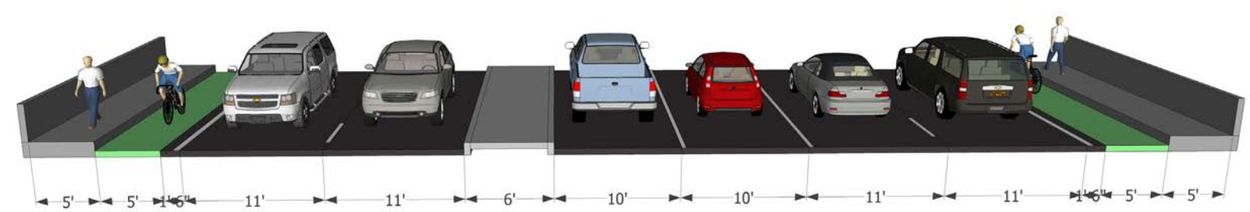

Figure 25: Standard Bike Lanes with Minor Median Modifications **Proposed Section 1:** Tecolote Bridge

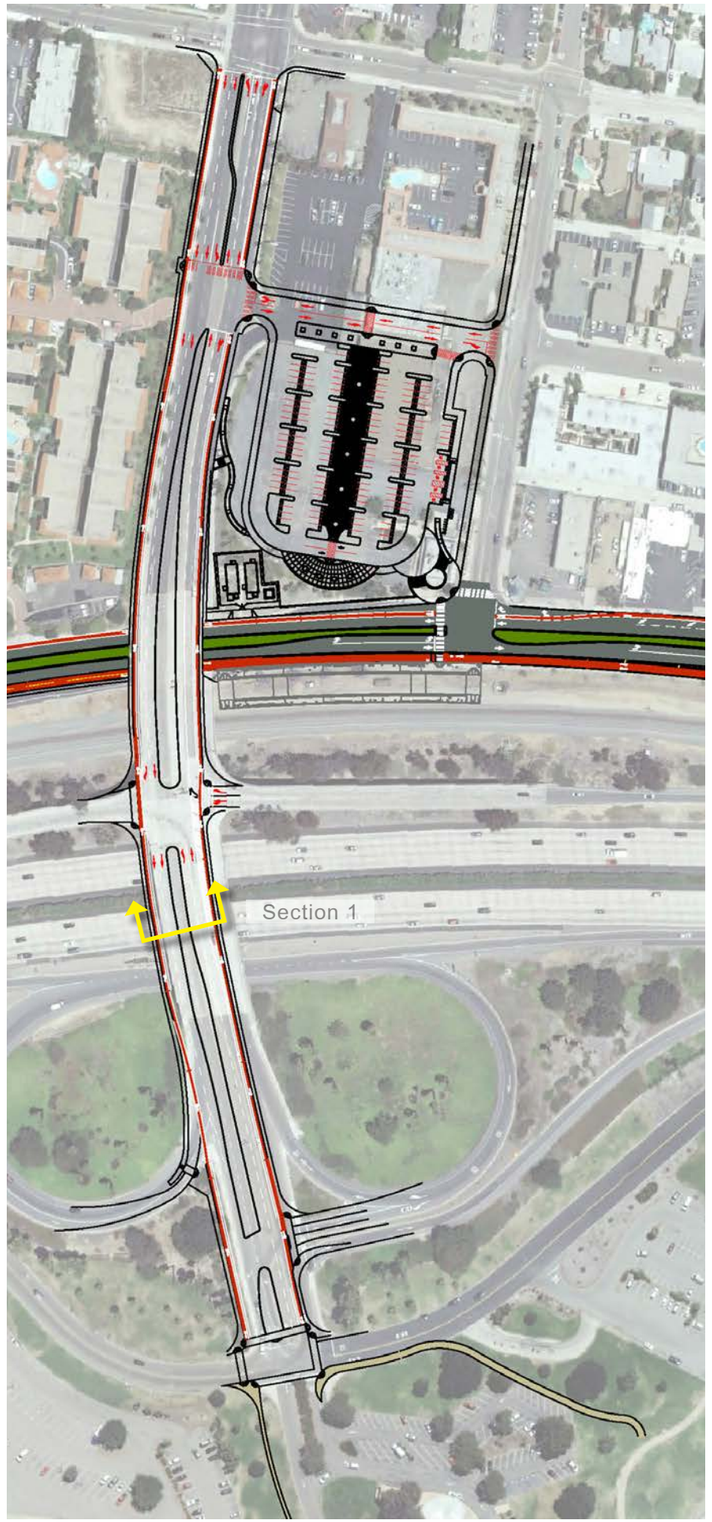

Figure 26: Plan View of Clairemont Bridge Crossing Improvements

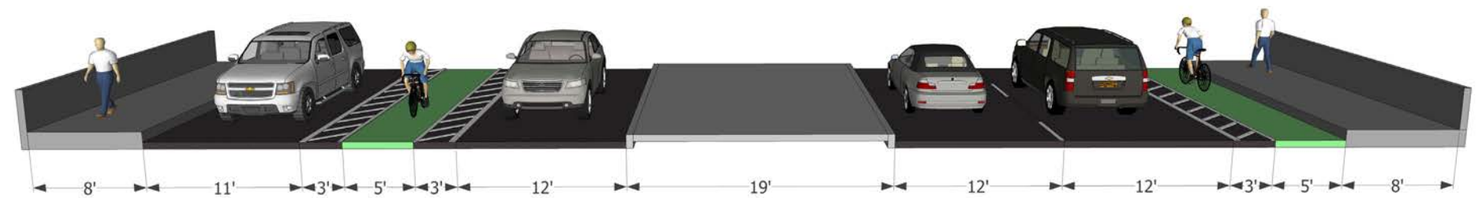

Figure 27: Buffered Bike Lanes with Right Turn Only Lane & Green Lane Crossovers

Proposed Section 1: Clairemont Bridge

Figure 28: Buffered Bike Lanes Against Curb with Special Bike & Ped. Phase & Right Turn on Red Restrictions

Proposed Section 1: Clairemont Bridge

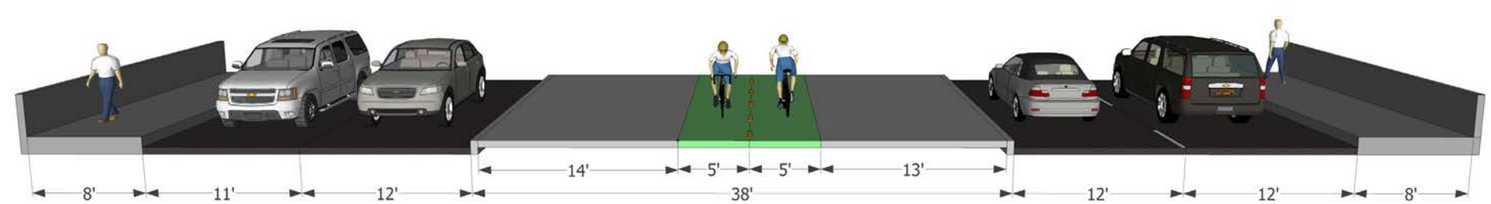

Figure 29: Median Based Bike Lane with Special Left Turn Signal Controls & Bike Signal Only Phase

Proposed Section 1: Clairemont Bridge

"Post Workshop Options" South of Clairemont

NORTH 1"= 200' **Figures 30-37**

Morena Blvd Station Area Planning Study

Figure 30: Modified Station Plan with Expanded Walkway

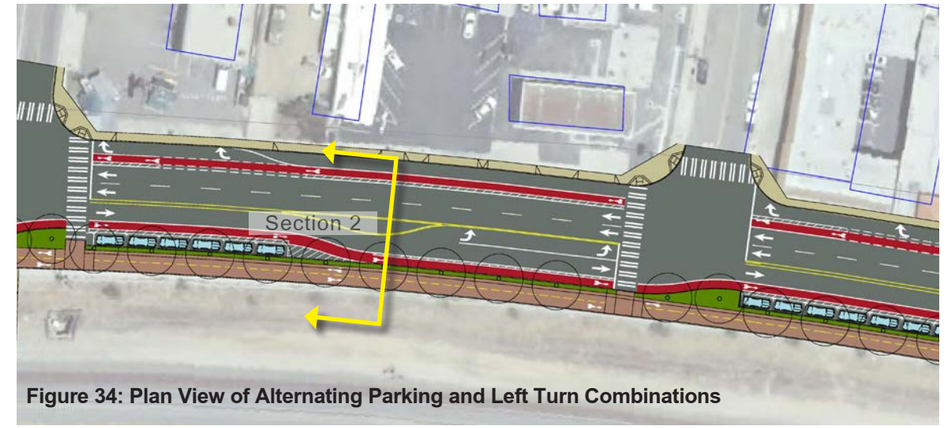

Figure 34: Plan View of Alternating Parking and Left Turn Combinations

Figure 31: Currently Planned MidCoast Station **Section 1:** Clairemont Trolley Station

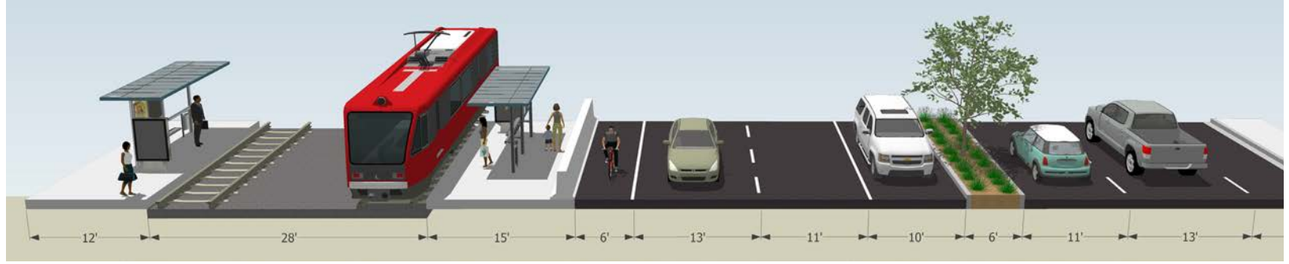

Figure 32: Buffer Provided by Parkway & Bike Lane **Section 1:** Clairemont Trolley Station

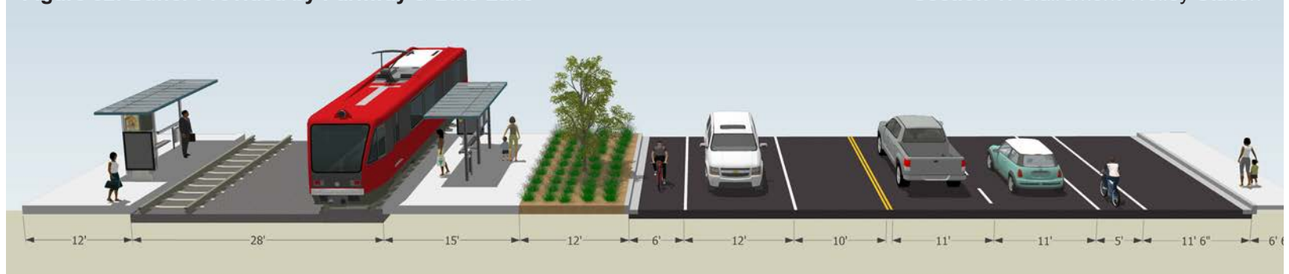

Figure 33: Add Fence, Walkway with Trees in Tree Grates & Buffered Bike Lane **Section 1:** Clairemont Trolley Station

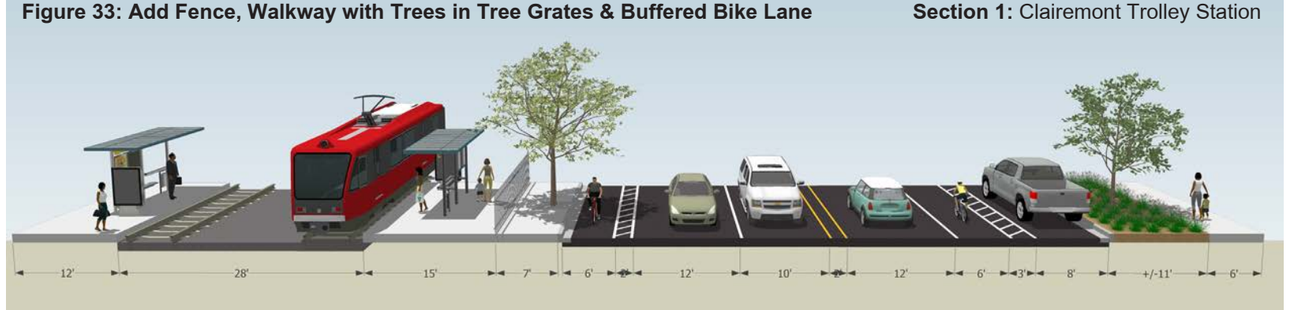

Figure 35: Drop Southbound & Add Cycle Track **Section 2: South of** Clairemont Trolley Station

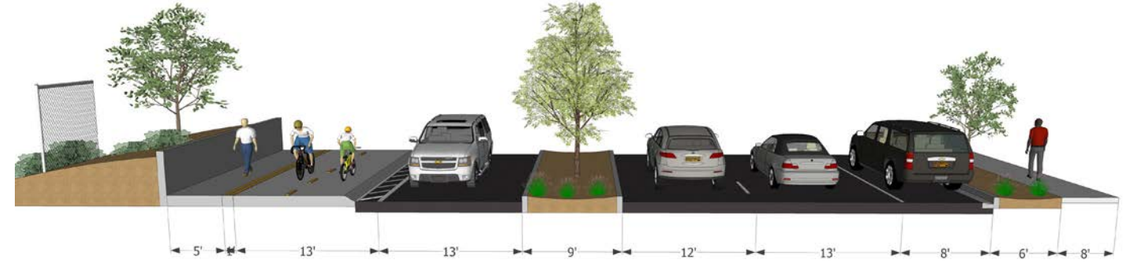

Figure 36: Drop Southbound & Add Buffered Bike Lanes **Section 2: South of** Clairemont Trolley Station

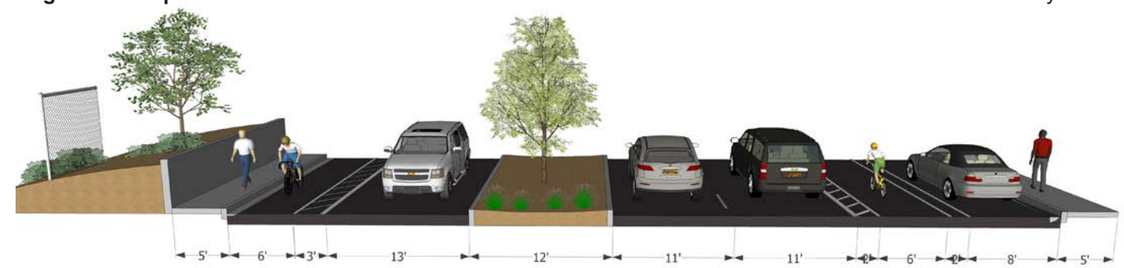

Figure 37: Remove East Side Parking & Add Bike Lanes **Section 2: South of** Clairemont Trolley Station

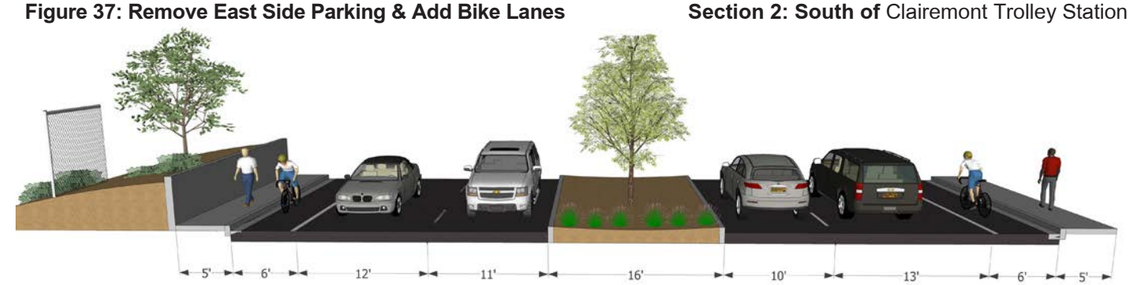

Figure 38: Plan View of Improvements South of Tecolote

Figure 39: One Lane Southbound with Green Backed Sharrow Lane Northbound **Section 1:** Clairemont Trolley Station

Figure 40: Two Lanes Each Direction with Parallel Parking **Section 1:** Clairemont Trolley Station

Morena Blvd Station Area Planning Study

Appendix E:

Travel Demand Model Output Sheets

Morena 2008 Street Network

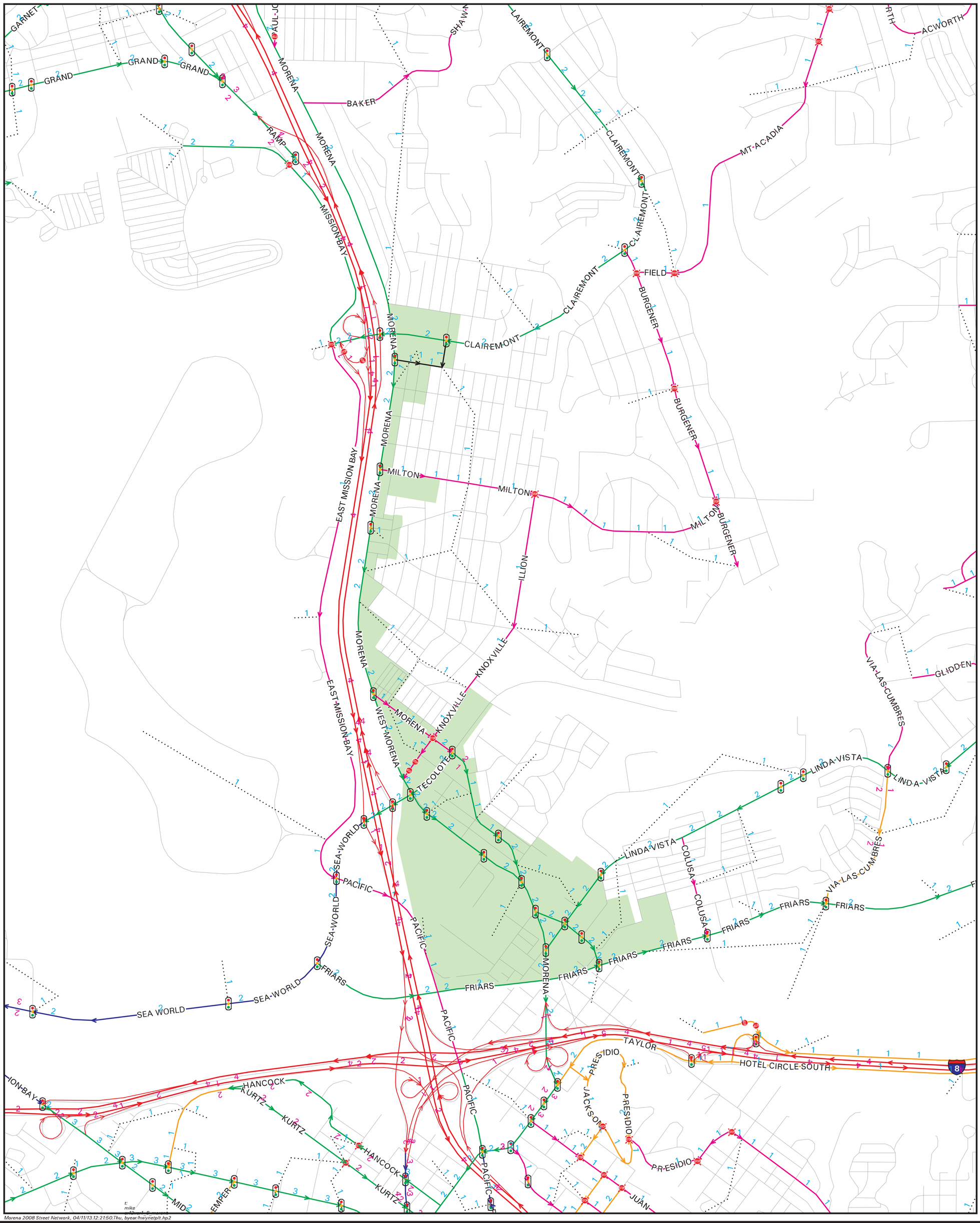

MORENA Street Network

SANDAG SR12
2008 Network

Legend

- Freeway
- Prime
- Major
- Collector
- Local Collector
- Rural Collector
- Rural Light Collector
- Local
- Ramp

- Signal
- All-Way Stop
- Stop

Feet
0 800 1,600
0 96 288 480
Meters

N

April 11, 2013

The information contained on this map pertains to this project. Interpretation of the information should be made by someone appropriately qualified. The use of the City traffic model should not be interpreted as an approval of the project. This map may also contain information from SANDAG and/or SanGIS.

DWP

Morena 2008 Street Network, 04/11/13.12:21:50.Thu, byear/hwynetplt.hp2

MORENA STATION - Base Year (2008) Unadjusted ADT

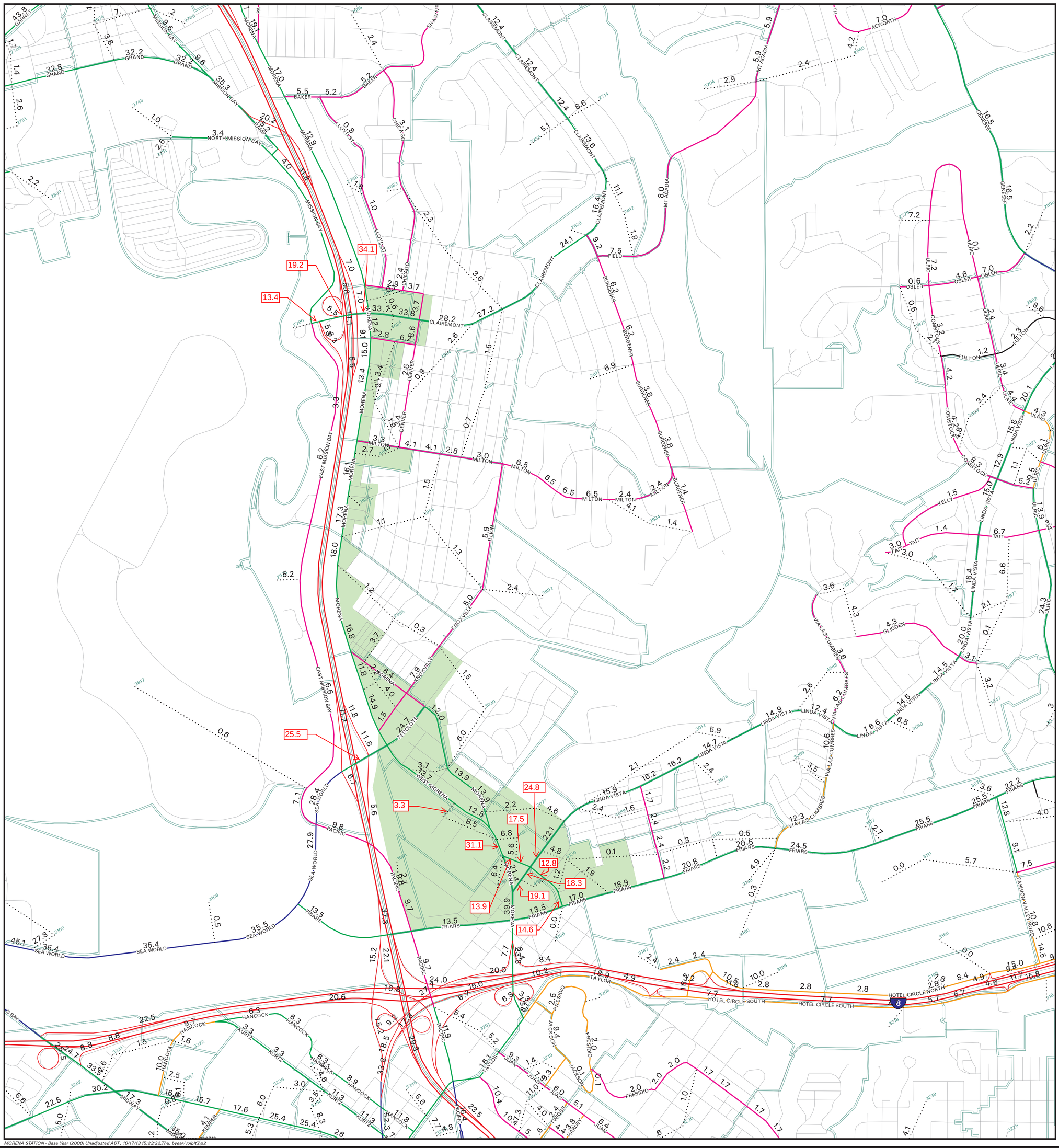

Morena Station

SANDAG Series 12

Base Year Unadjusted ADT

Legend

- Freeway
- Prime
- Major
- Collector
- Local Collector
- Rural Collector
- Rural Light Collector
- Local
- Ramp

 # Unadjusted Volumes (1000s)

Feet
0 800 1,600
0 96 288 480
Meters

N

October 17, 2013

The information contained on this map pertains to this project. Interpretation of the information should be made by someone appropriately qualified. The use of the City traffic models should not be interpreted as an approval of the project. This map may also contain information from SANDAG and/or SanGIS.

Morena Station - Adopted CP Street Network

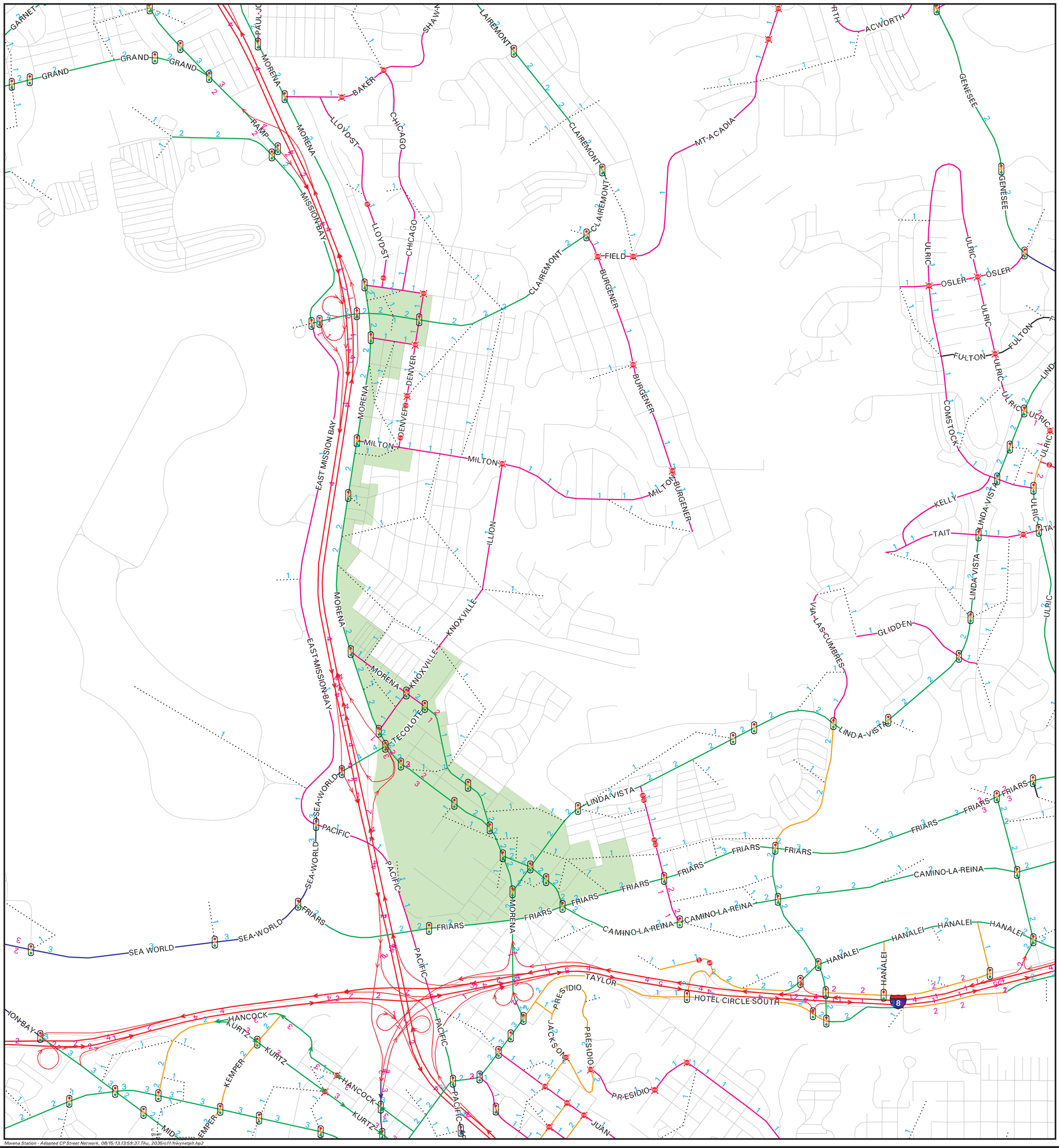

Morean Station

SANDAG Series 12

Regional: 2035RC
Study Area: Adopted CP

Legend

- Freeway
- Prime
- Major
- Collector
- Local Collector
- Rural Collector
- Rural Light Collector
- Local
- Ramp

- Signal
- All-Way Stop
- Stop

Feet
0 800 1,600
0 96 288 480
Meters

N

August 15, 2013

The information contained on this map pertains to this project. Interpretation of the information should be made by someone appropriately qualified. The use of the City traffic model should not be interpreted as an approval of the project. This map may also contain information from SANDAG and/or SanGIS.

Morena Station - Adopted CP Street Network, 08/15/13,13:59:37,Thu, 2035rc11/hwynetplt.hp2

DWP

MORENA STATION - ADOPTED CP ADT PLOT

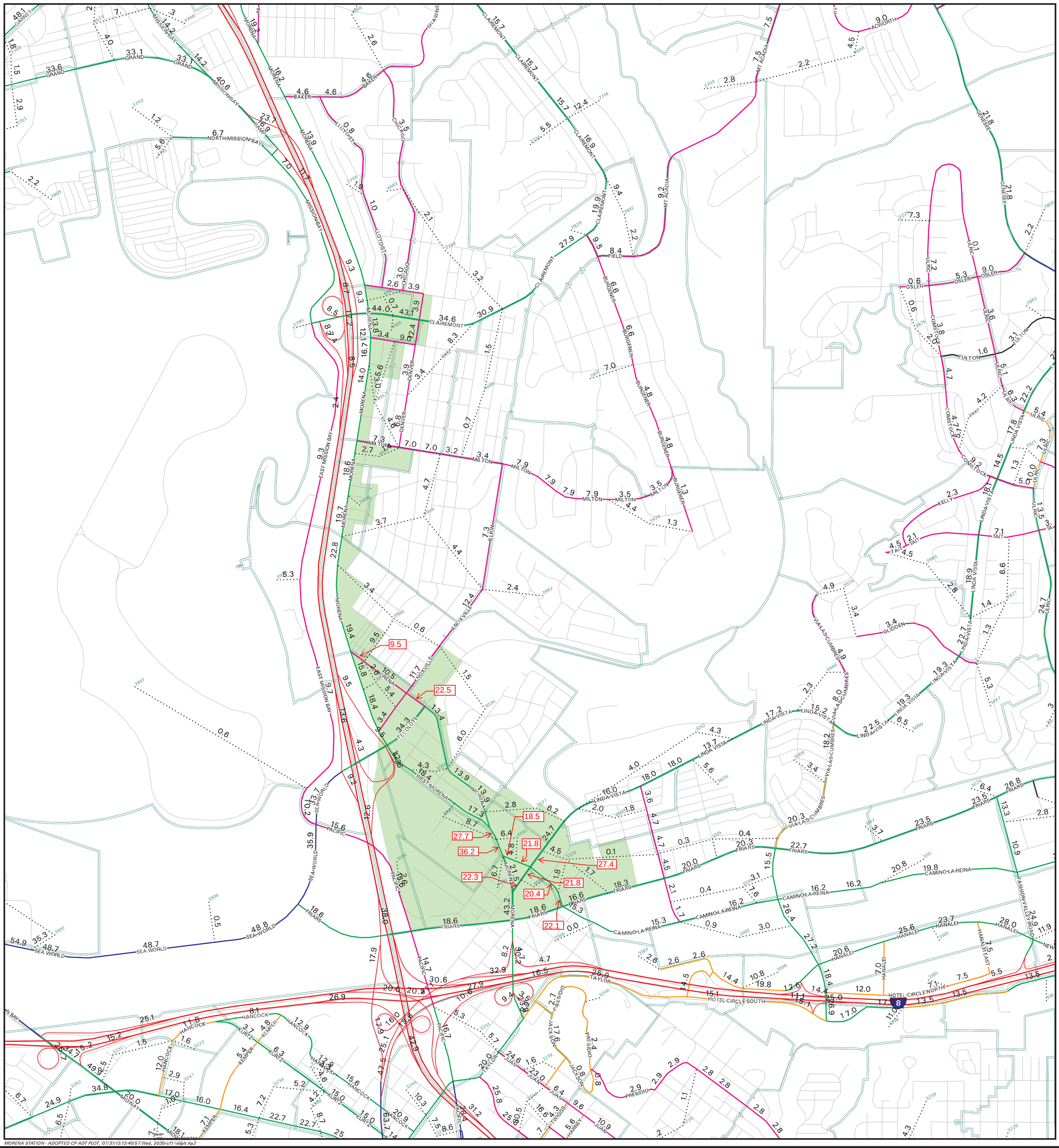

Morena Station

SANDAG Series 12

Regional: 2035RC
Study Area: Adopted CP

Legend

- Freeway
- Prime
- Major
- Collector
- Local Collector
- Rural Collector
- Rural Light Collector
- Local
- Ramp

 # Unadjusted Volumes (1000s)

Feet
0 800 1,600
0 96 288 480
Meters

N

July 31, 2013

The information contained on this map pertains to this project. Interpretation of the information should be made by someone appropriately qualified. The use of the City traffic models should not be interpreted as an approval of the project. This map may also contain information from SANDAG and/or SanGIS.

Morena Station - 2035 Street Network (w/Scenario 1)

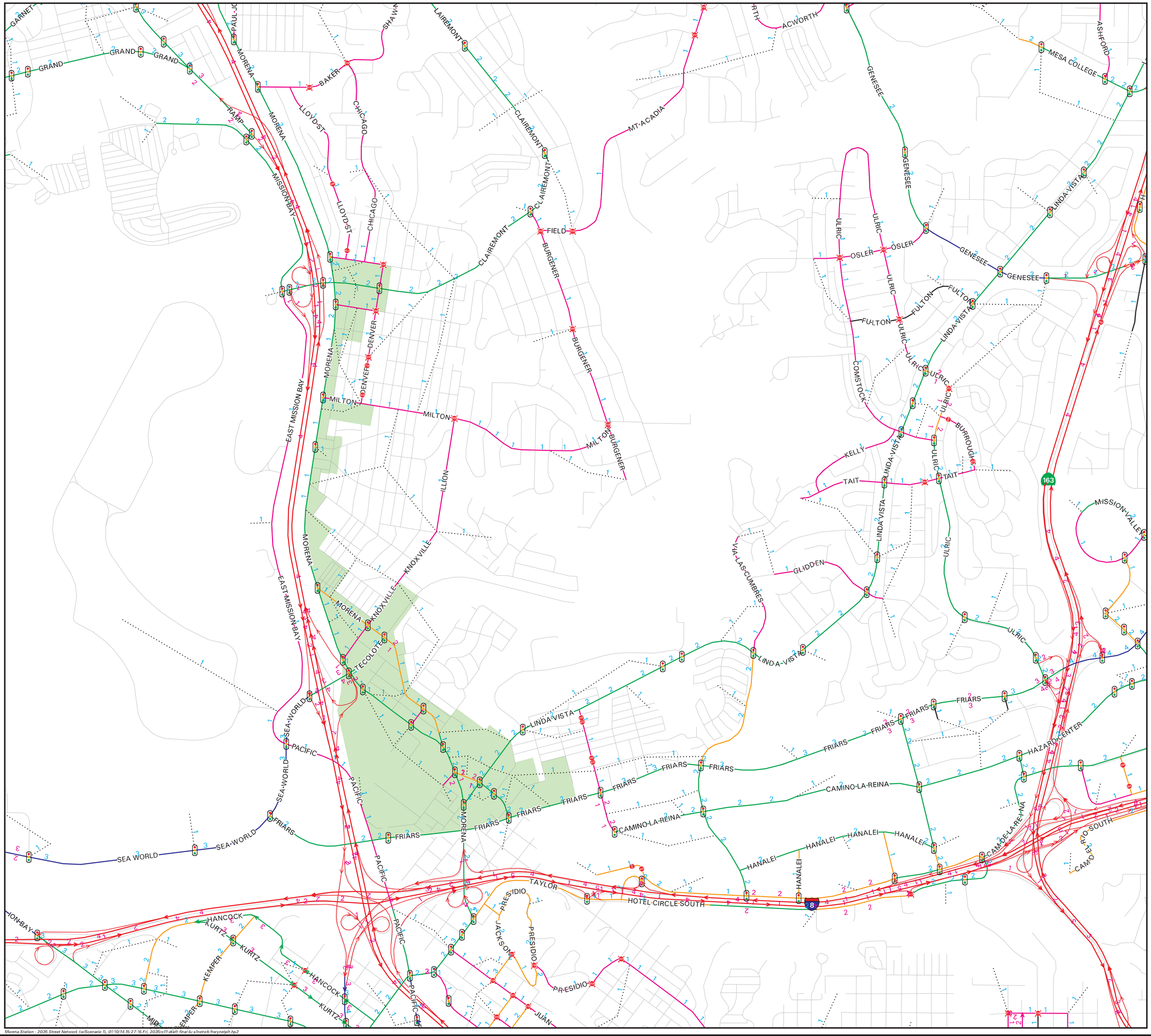

Morean Station

SANDAG Series 12

Regional: 2035RC
Study Area: Scenario 1

Legend

- Freeway
- Prime
- Major
- Collector
- Local Collector
- Rural Collector
- Rural Light Collector
- Local
- Ramp

- Signal
- All-Way Stop
- Stop

Feet
0 800 1,600
0 96 288 480
Meters

N

January 10, 2014

The information contained on this map pertains to this project. Interpretation of the information should be made by someone appropriately qualified. The use of the City traffic model should not be interpreted as an approval of the project. This map may also contain information from SANDAG and/or SanGIS.

DWP

Morena Station - 2035 Street Network (w/Scenario 1), 01/10/14 15:27:16 Fri, 2035rc11-draft-final-lu-s1netwk:hwynetplt.hp2

MORENA STATION - 2035 ADT (w/Draft Final LU & Scenario 1 Network)

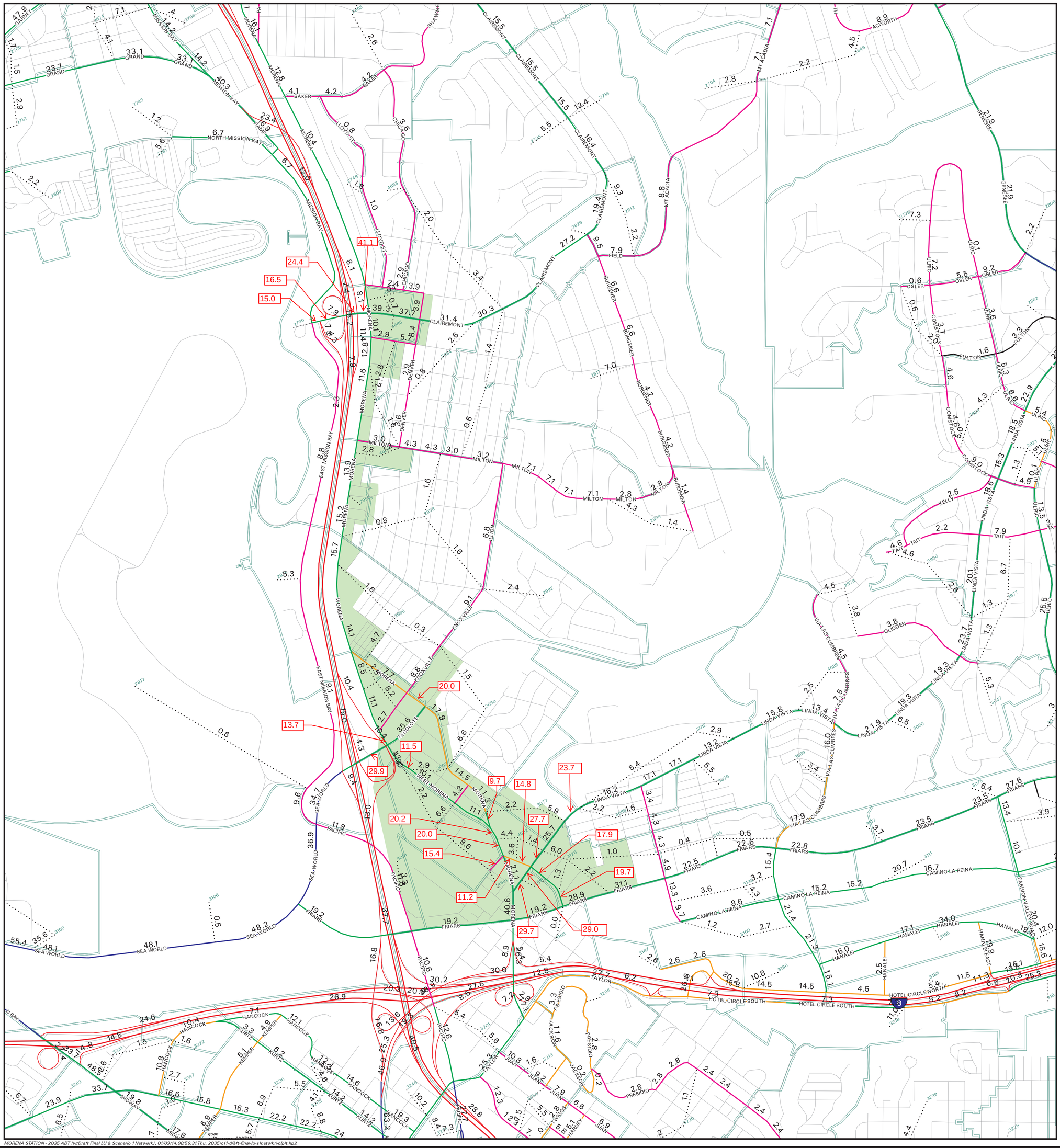

Morena Station

SANDAG Series 12

Regional: 2035RC
Study Area: Draft Final LU
w/Scenario 1 Street Network

Legend

- Freeway
- Prime
- Major
- Collector
- Local Collector
- Rural Collector
- Rural Light Collector
- Local
- Ramp

Unadjusted Volumes (1000s)

Feet
0 800 1,600
0 96 288 480
Meters

N

January 9, 2014

The information contained on this map pertains to this project. Interpretation of the information should be made by someone appropriately qualified. The use of the City traffic model should not be interpreted as an approval of the project. This map may also contain information from SANDAG and/or SanGIS.

Morena Station - 2035 Street Network (w/Scenario 2)

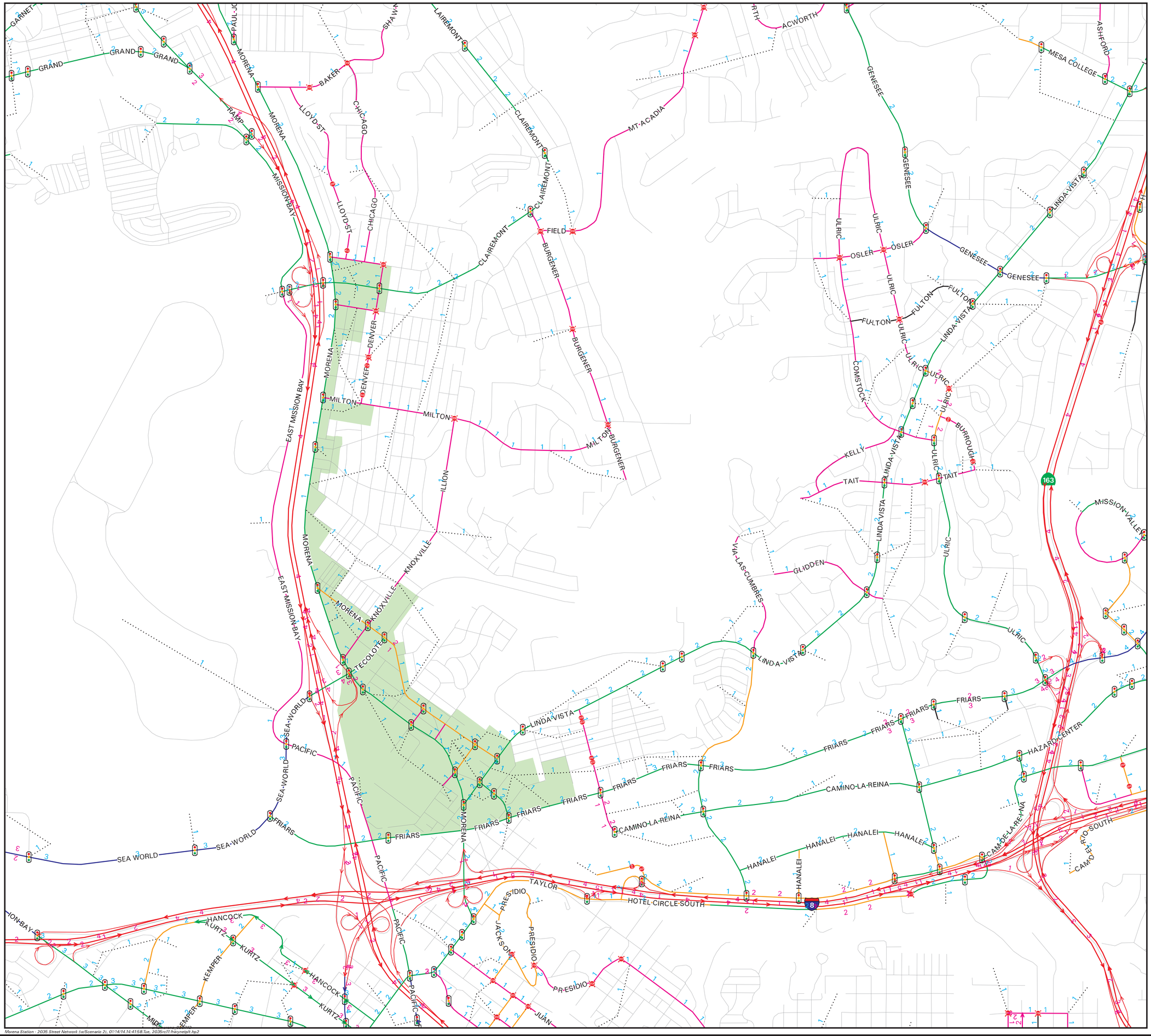

Morean Station

SANDAG Series 12

Regional: 2035RC
Study Area: Scenario 2

Legend

- Freeway
- Prime
- Major
- Collector
- Local Collector
- Rural Collector
- Rural Light Collector
- Local
- Ramp

- Signal
- All-Way Stop
- Stop

Feet
0 800 1,600
0 96 288 480
Meters

N

January 14, 2014

The information contained on this map pertains to this project. Interpretation of the information should be made by someone appropriately qualified. The use of the City traffic model should not be interpreted as an approval of the project. This map may also contain information from SANDAG and/or SanGIS.

DWP

Morena Station - 2035 Street Network (w/Scenario 2), 01/14/14 14:41:58 Tue, 2035rc11/hwynetplt.hp2

MORENA STATION - 2035 ADT (w/Draft Final LU & Scenario 2 Network)

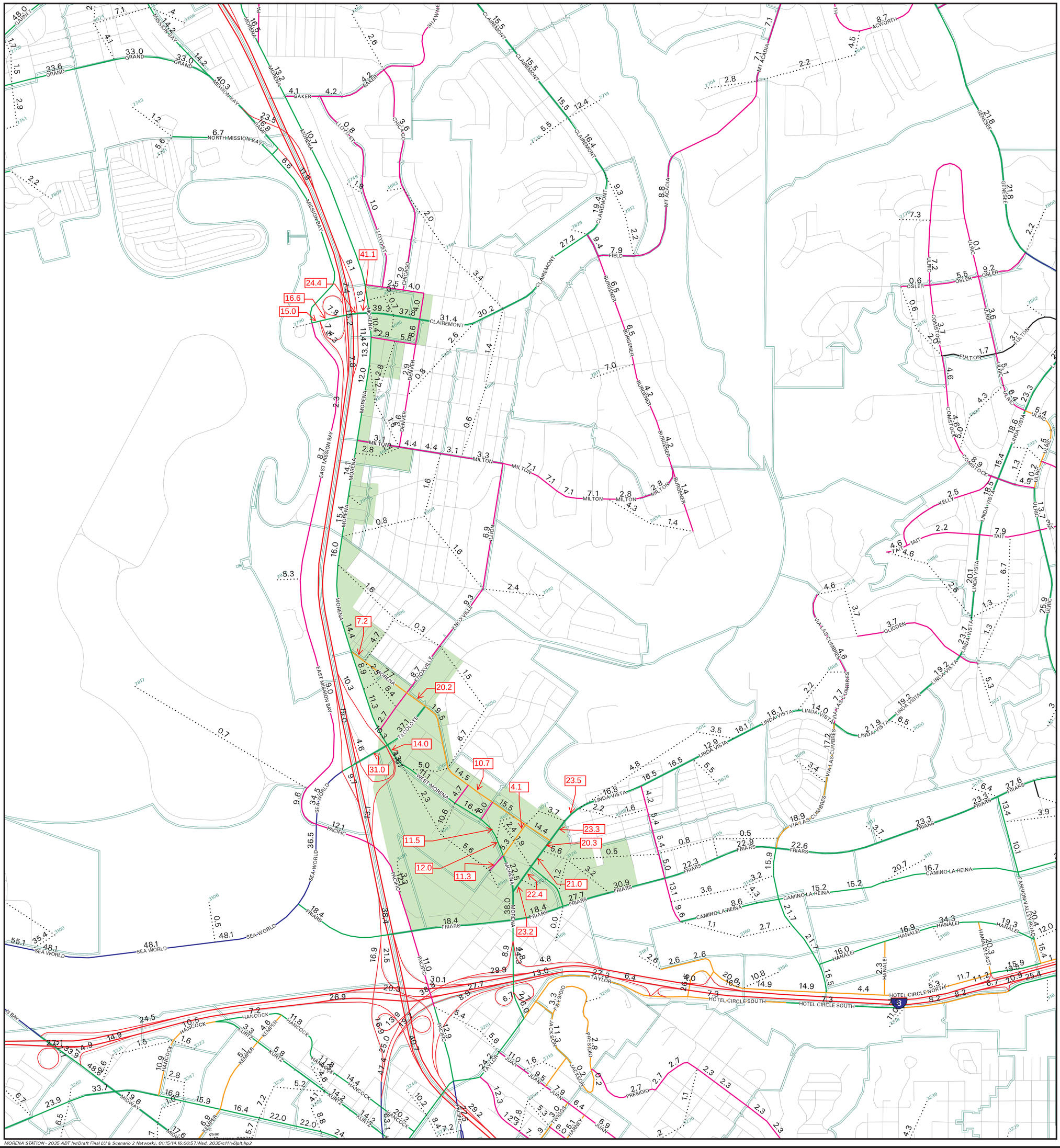

Morena Station

SANDAG Series 12

Regional: 2035RC
Study Area: Draft Final LU
w/Scenario 2 Street Network

Legend

- Freeway
- Prime
- Major
- Collector
- Local Collector
- Rural Collector
- Rural Light Collector
- Local
- Ramp

Unadjusted Volumes (1000s)

Feet
0 800 1,600
0 96 288 480
Meters

N

THE CITY OF SAN DIEGO • STATE OF CALIFORNIA • SEMPER VIGILANS

January 15, 2014

The information contained on this map pertains to this project. Interpretation of the information should be made by someone appropriately qualified. The use of the City traffic model should not be interpreted as an approval of the project. This map may also contain information from SANDAG and/or SanGIS.

MORENA STATION - 2035 ADT (w/Draft Final LU & Scenario 2 Network), 01/15/14 16:00:57 Wed, 2035rc11/volplt.hp2

QH

Morena Blvd Station Area Planning Study

Appendix E:

Intersection Turning Movements

Existing Conditions – AM Peak Hour

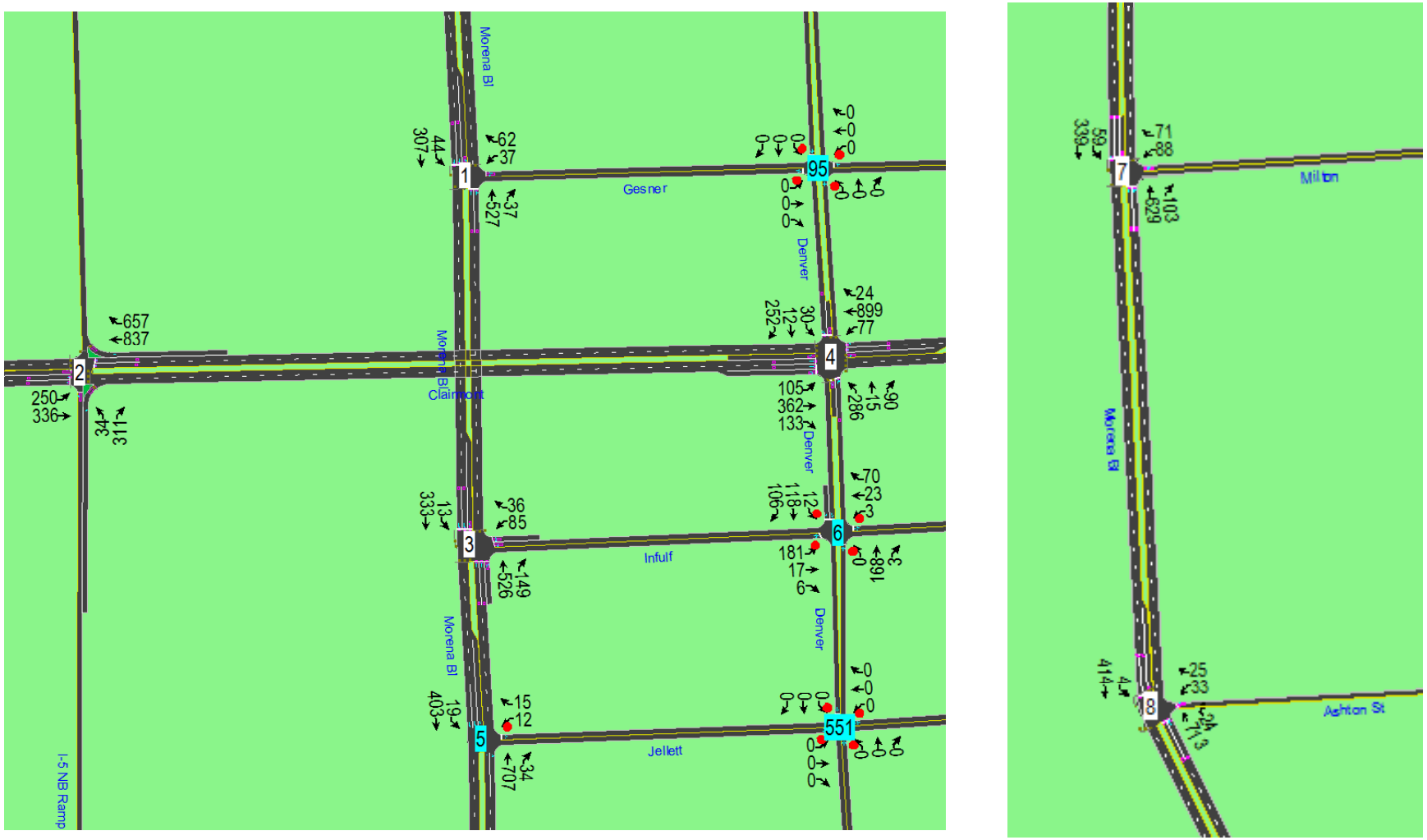

Intersections 1-8

Intersection Turning Movements

Existing Conditions – AM Peak Hour

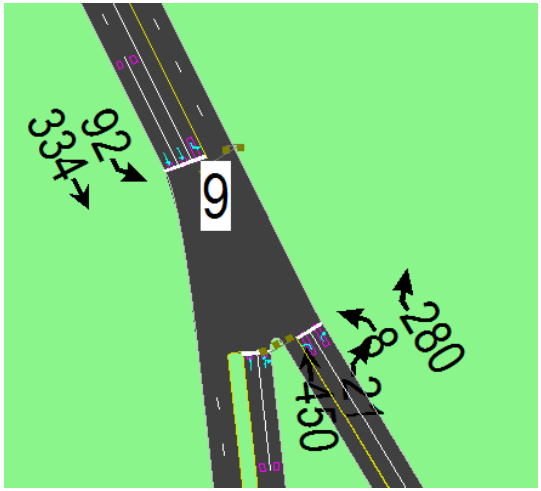

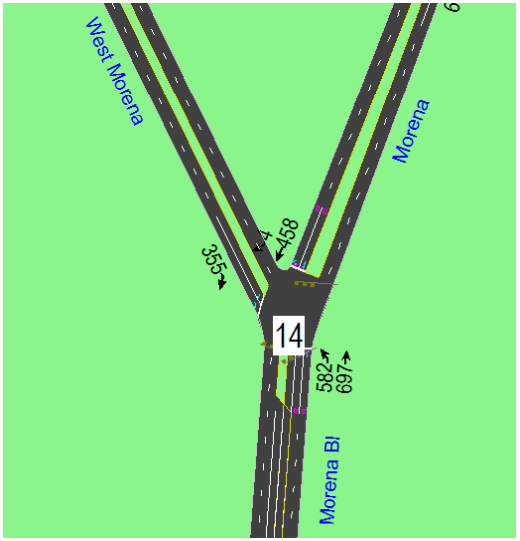

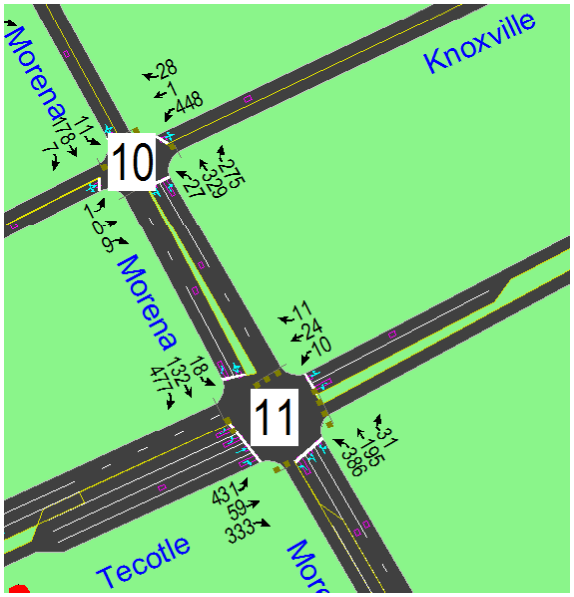

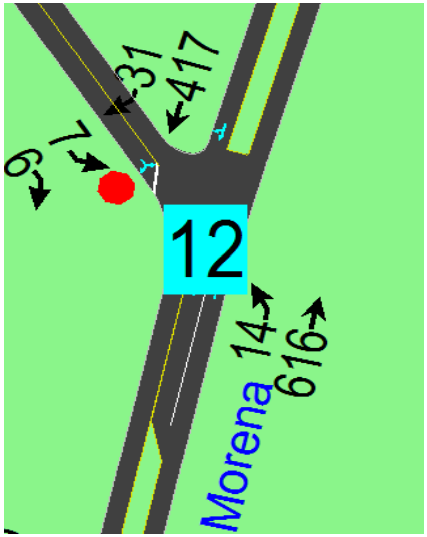

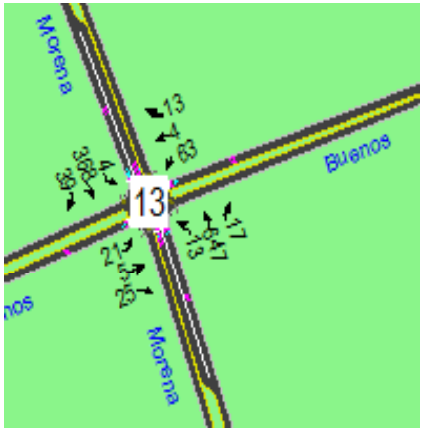

Intersections 9-14

Intersection Turning Movements

Existing Conditions – AM Peak Hour

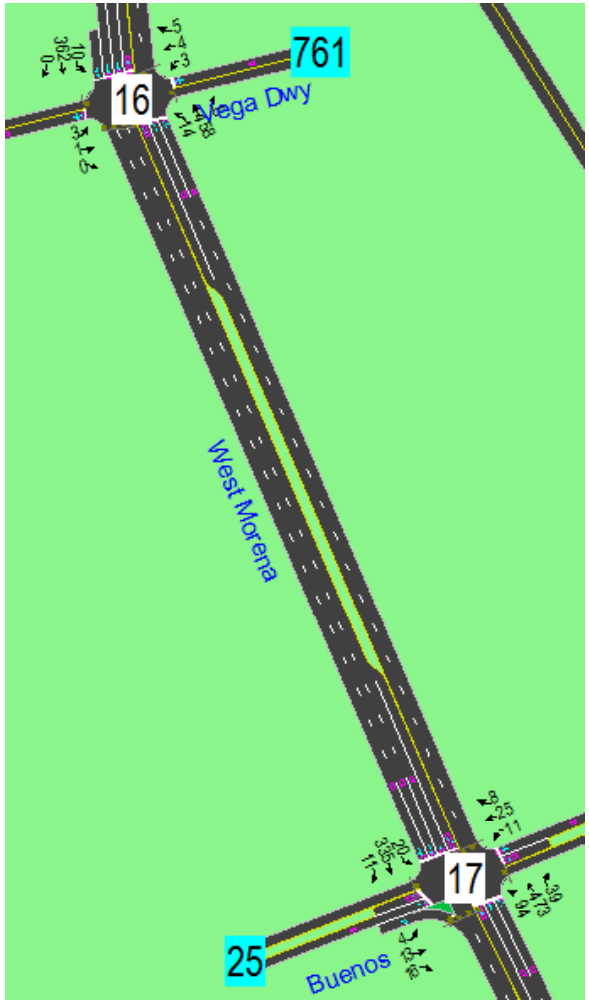

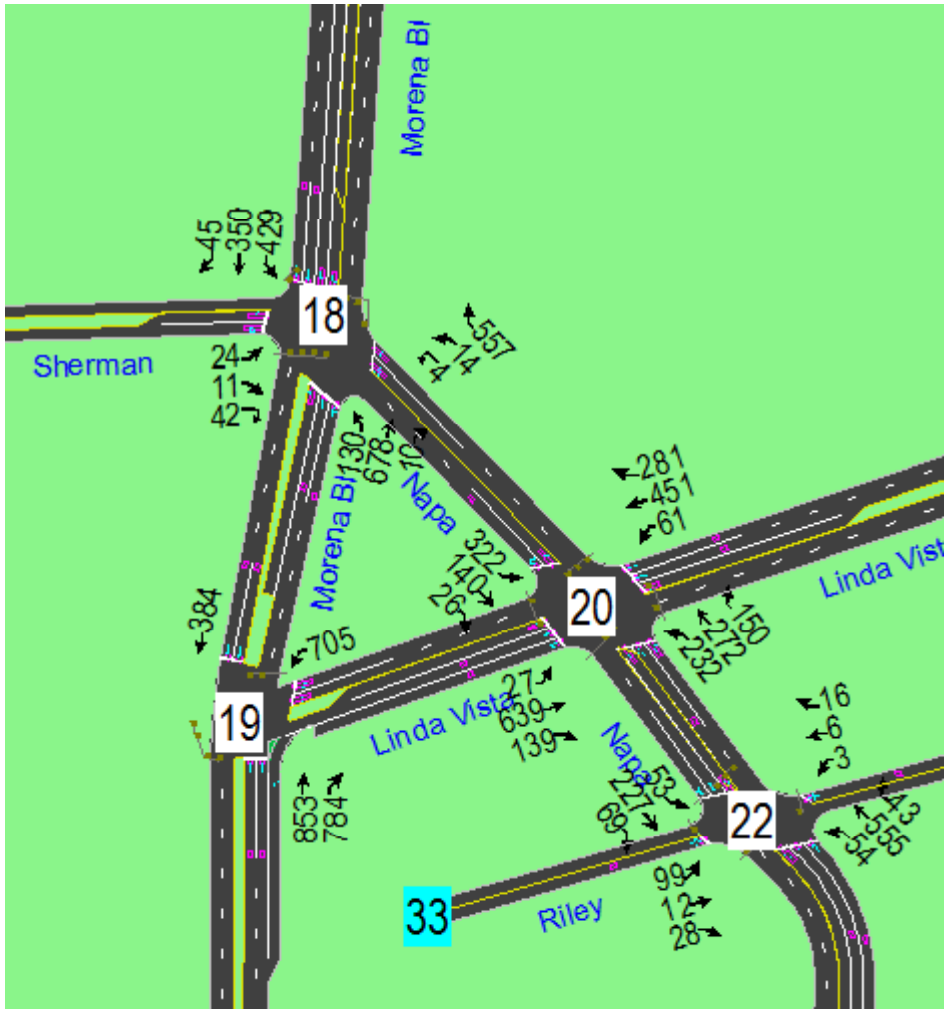

Intersections 16-20 & 22

Intersection Turning Movements

Existing Conditions – AM Peak Hour

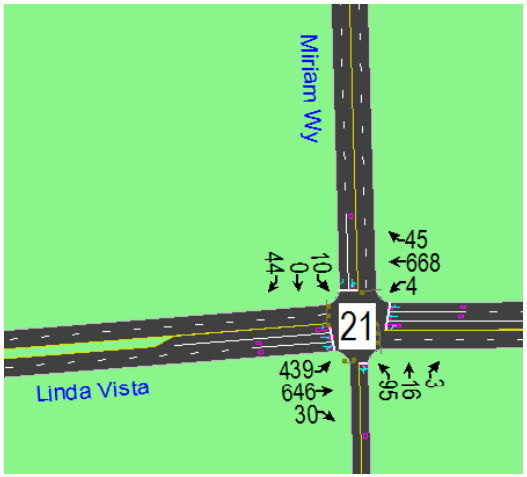

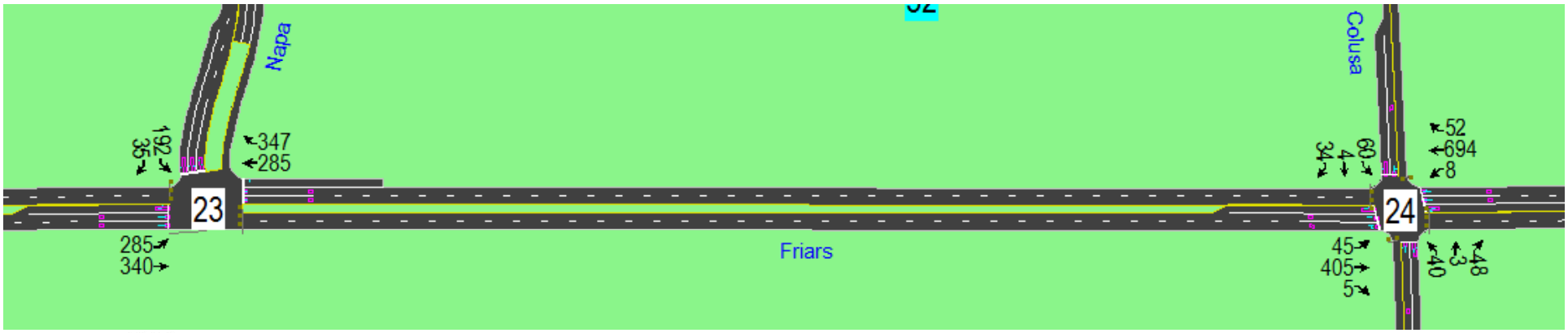

Intersections 21, 23-24

Intersection Turning Movements

Morena Blvd Station Area Plan

Existing Conditions – PM Peak Hour

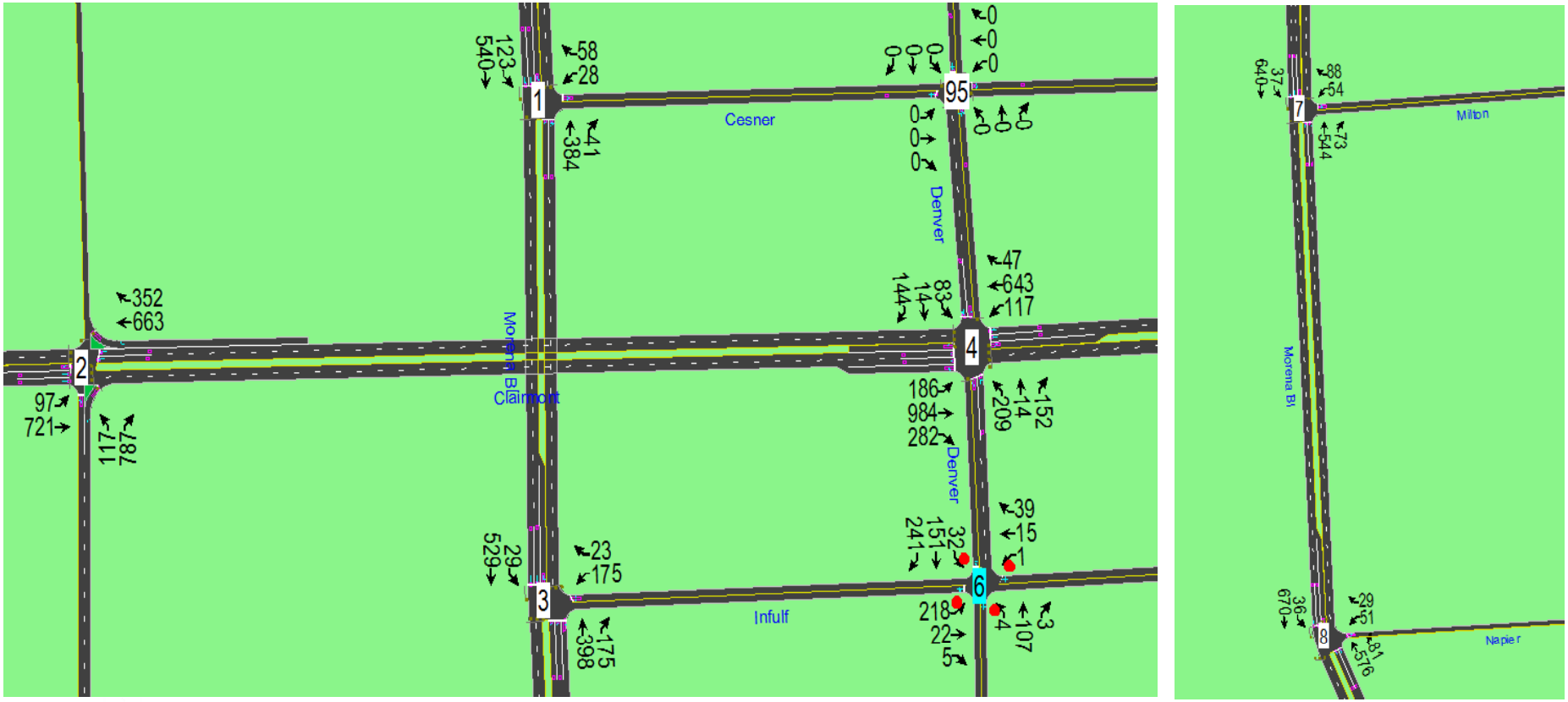

Intersections 1-8

Intersection Turning Movements

Existing Conditions – PM Peak Hour

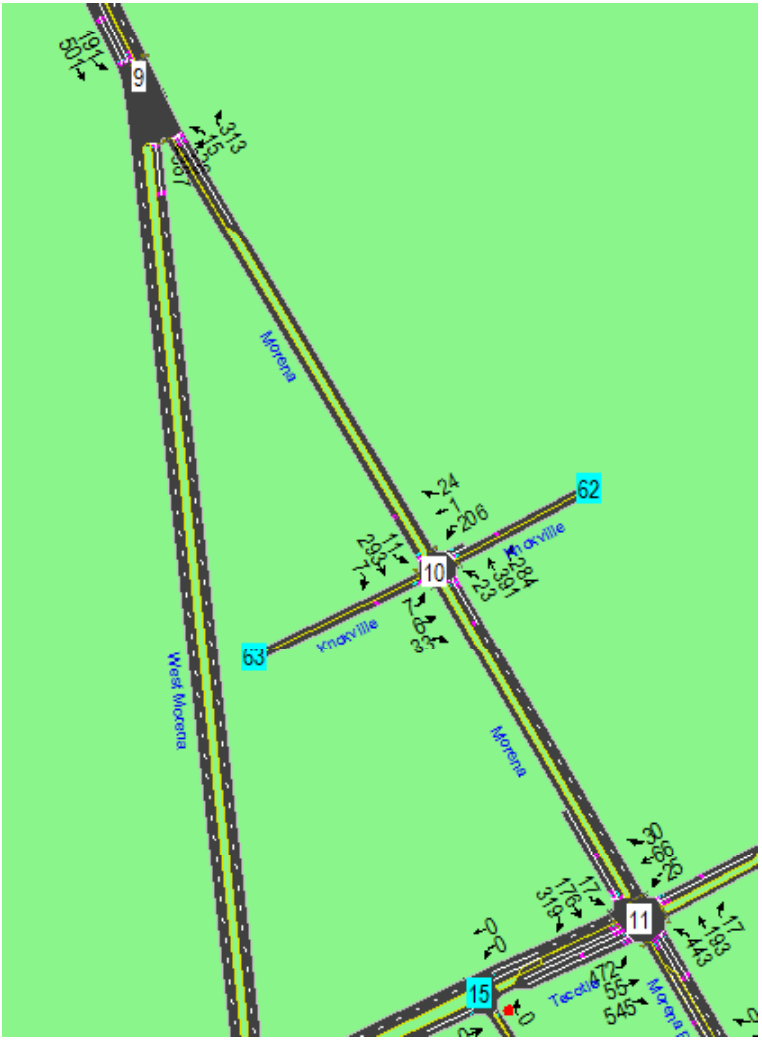

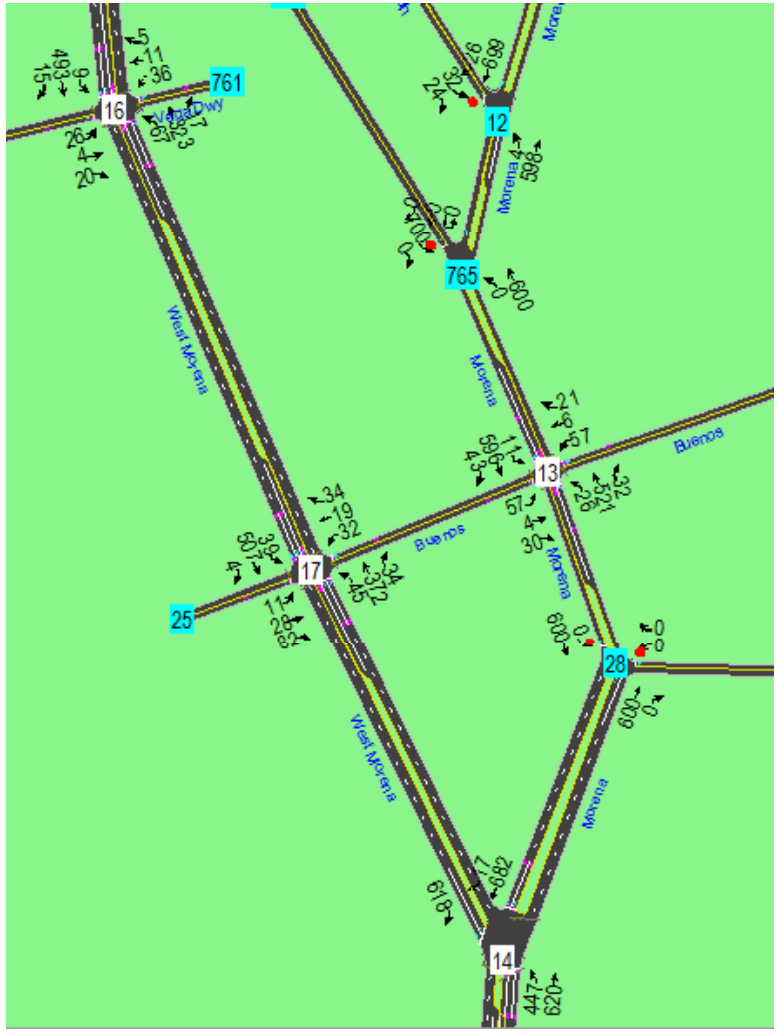

Intersections 9-17

Intersection Turning Movements

Morena Blvd Station Area Plan

Existing Conditions – PM Peak Hour

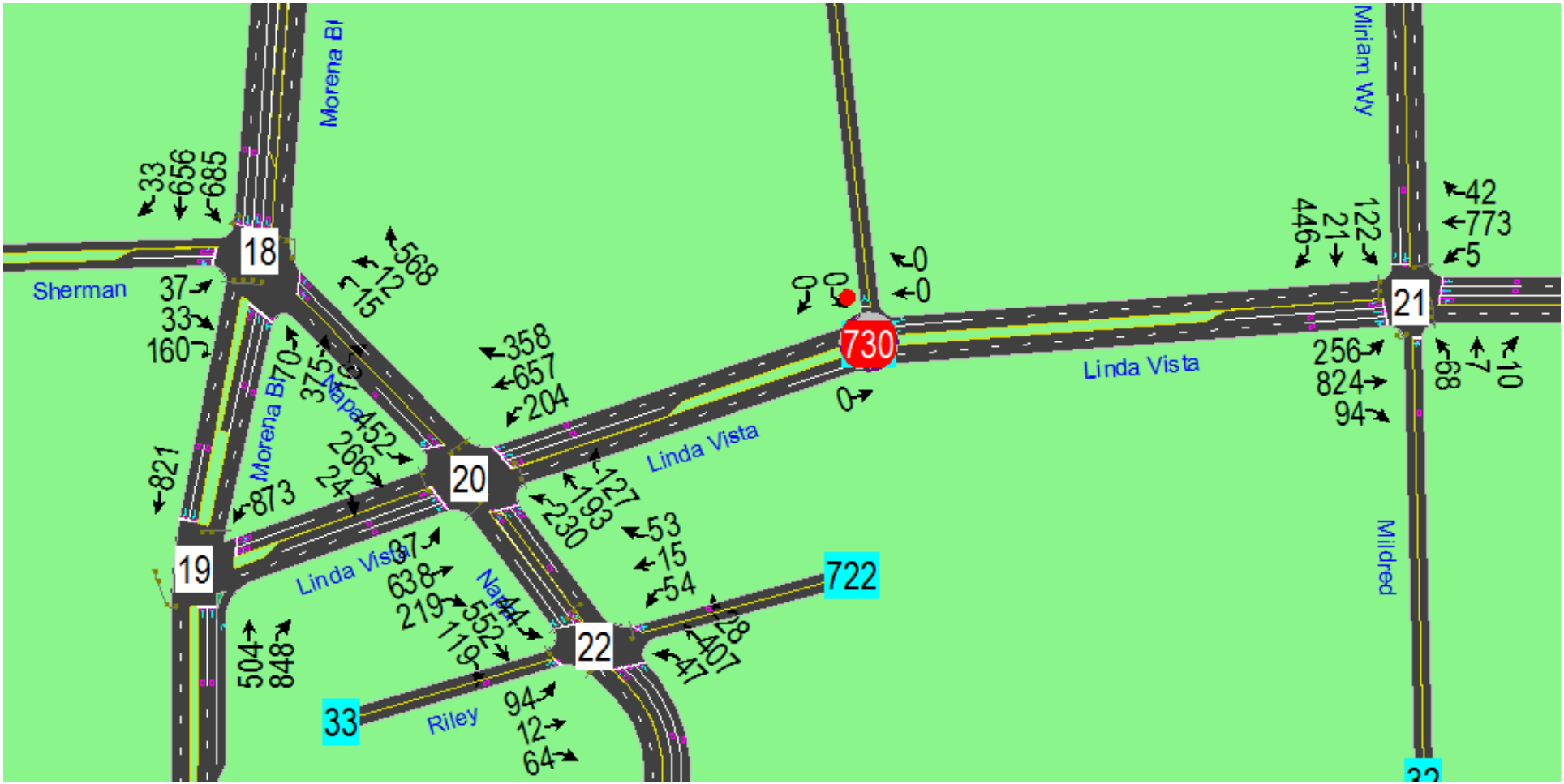

Intersections 18-22

Intersection Turning Movements

Morena Blvd Station Area Plan

Existing Conditions – PM Peak Hour

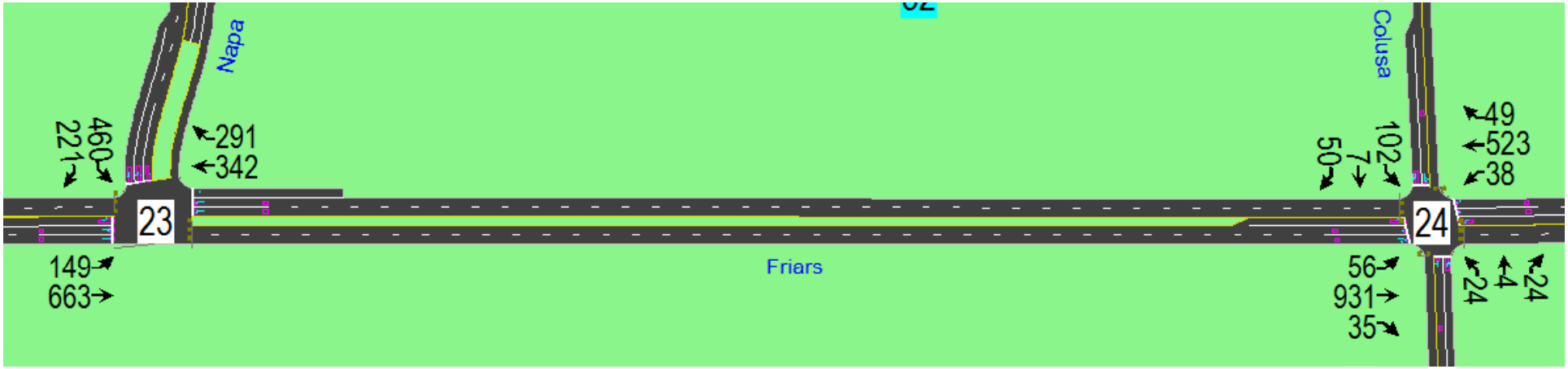

Intersections 21, 23-24

Intersection Turning Movements

Adopted Community Plan (Year 2035) – AM Peak Hour

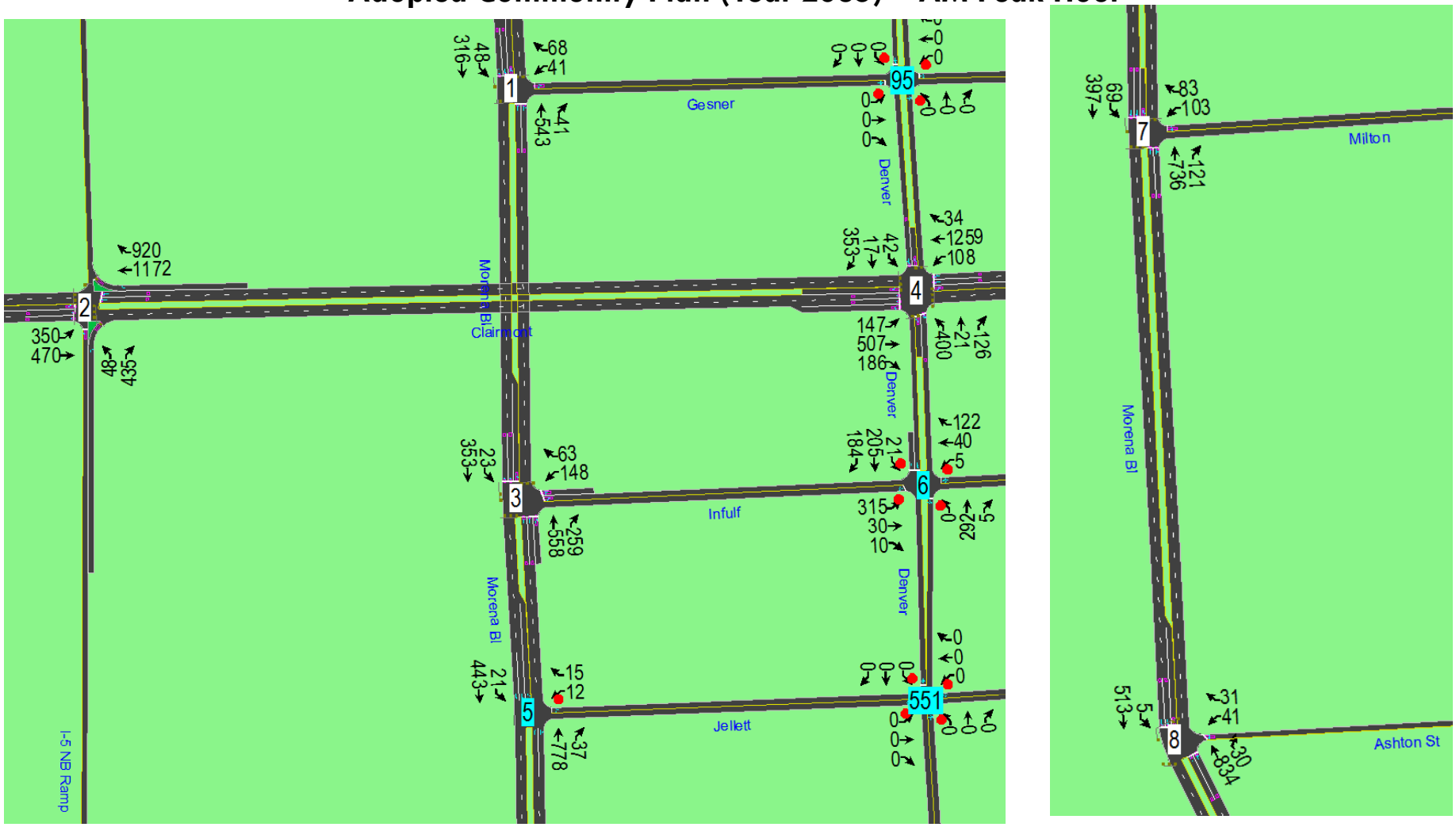

Intersections 1-8

Intersection Turning Movements

Adopted Community Plan (Year 2035) – AM Peak Hour

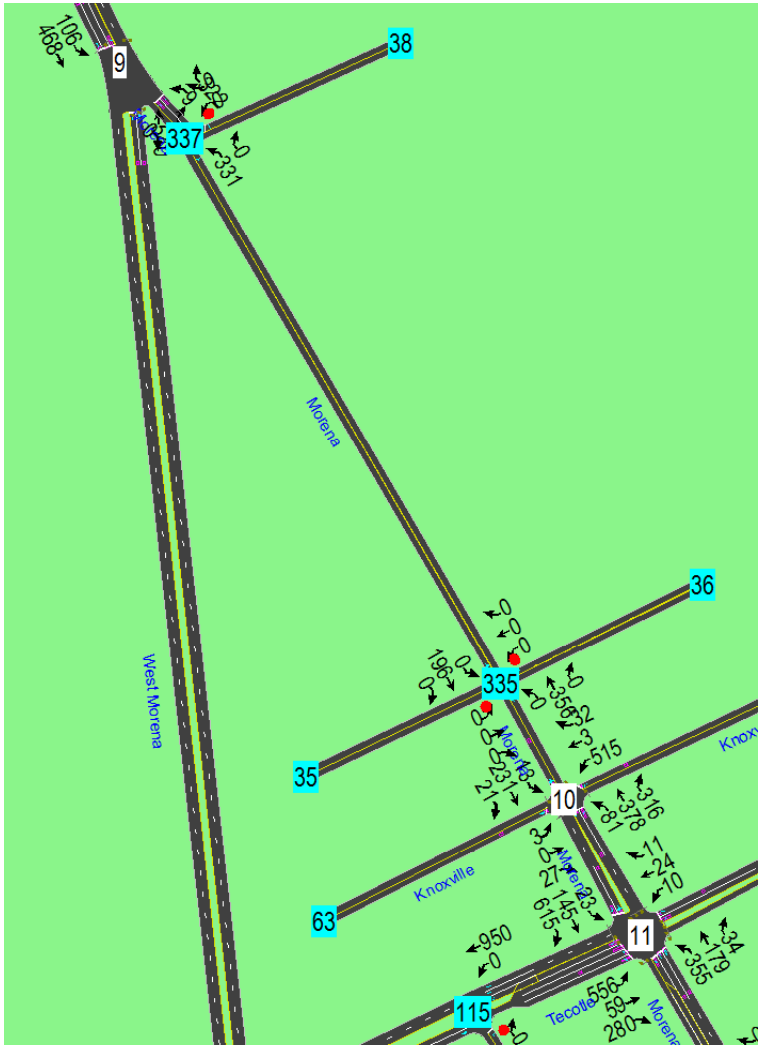

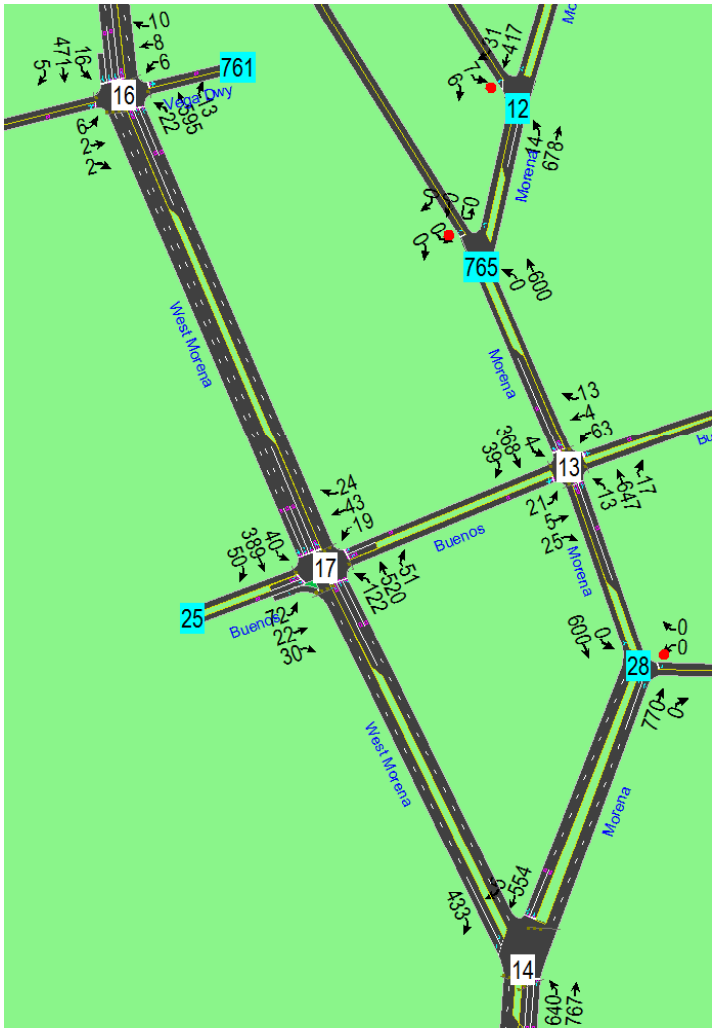

Intersections 9-17

Intersection Turning Movements

Morena Blvd Station Area Plan

Adopted Community Plan (Year 2035) – AM Peak Hour

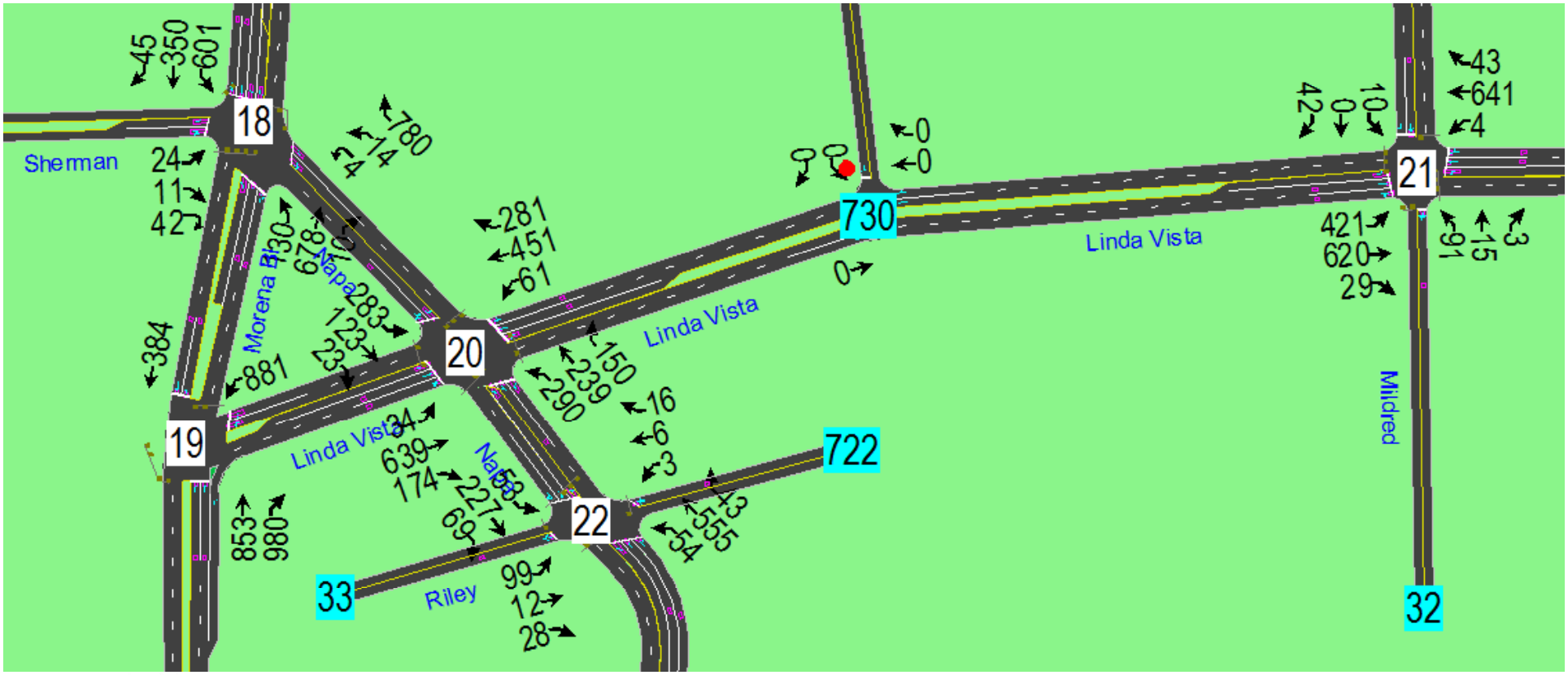

Intersections 18-22

Intersection Turning Movements

Adopted Community Plan (Year 2035) – AM Peak Hour

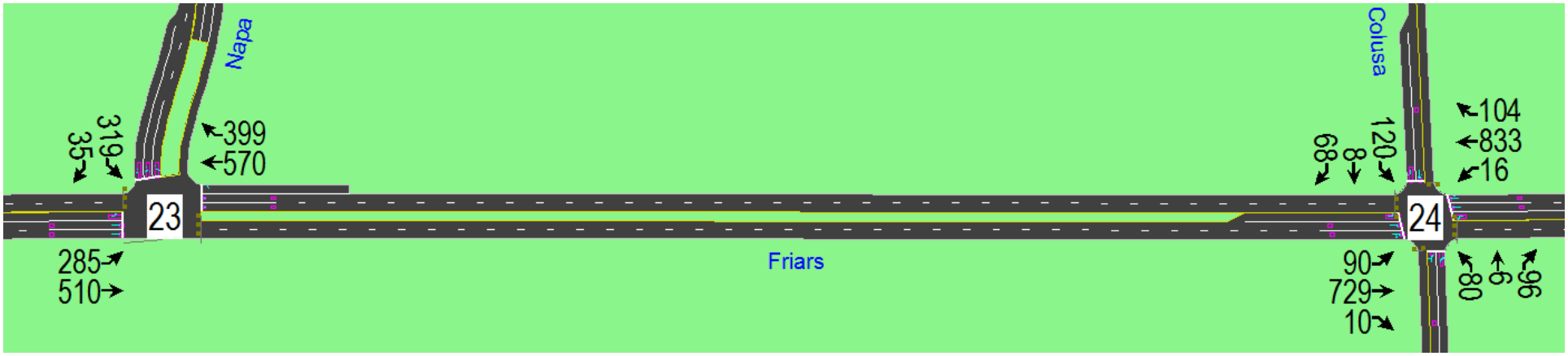

Intersections 23-24

Intersection Turning Movements

Adopted Community Plan (Year 2035) – PM Peak Hour

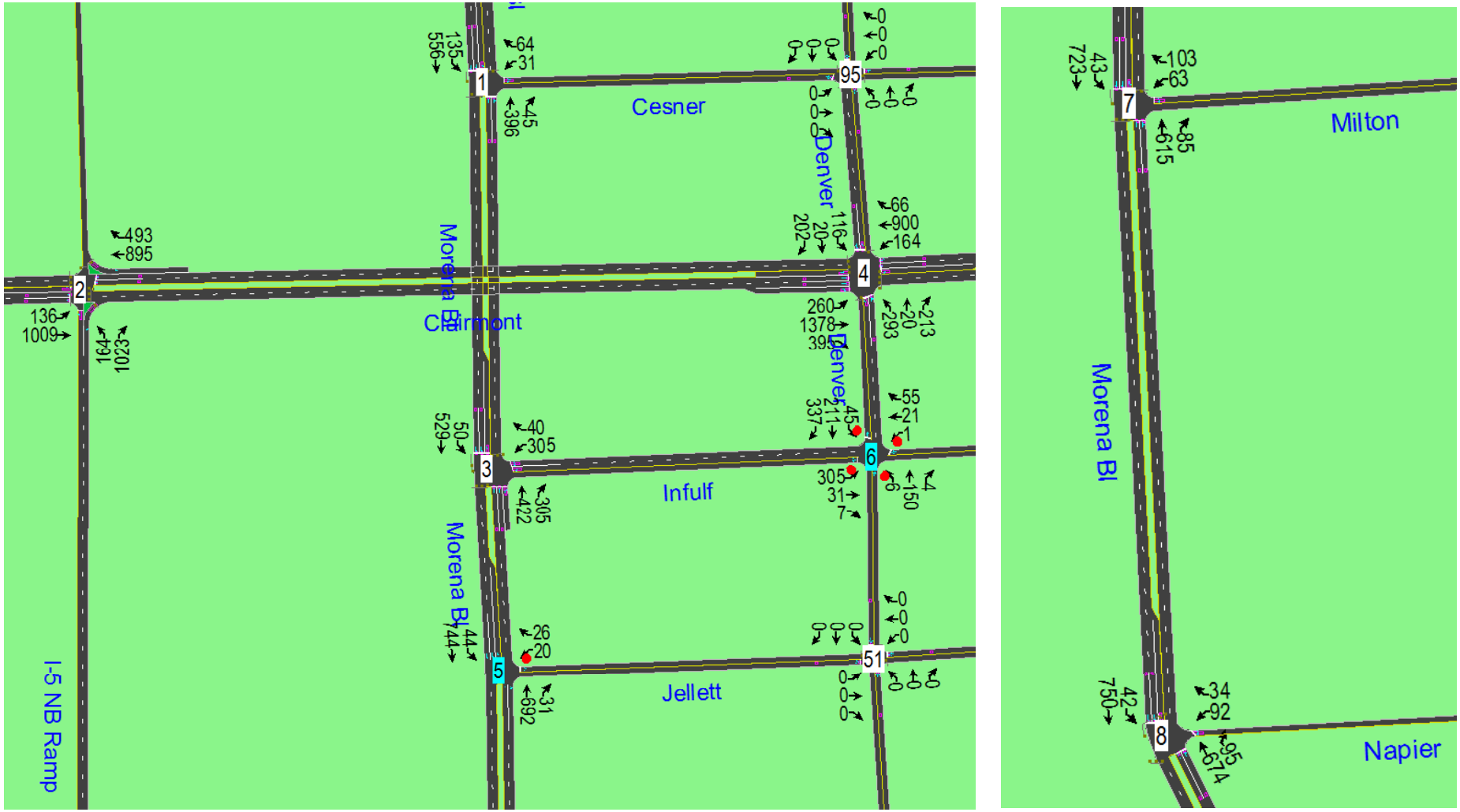

Intersections 1-8

Intersection Turning Movements

Adopted Community Plan (Year 2035) – PM Peak Hour

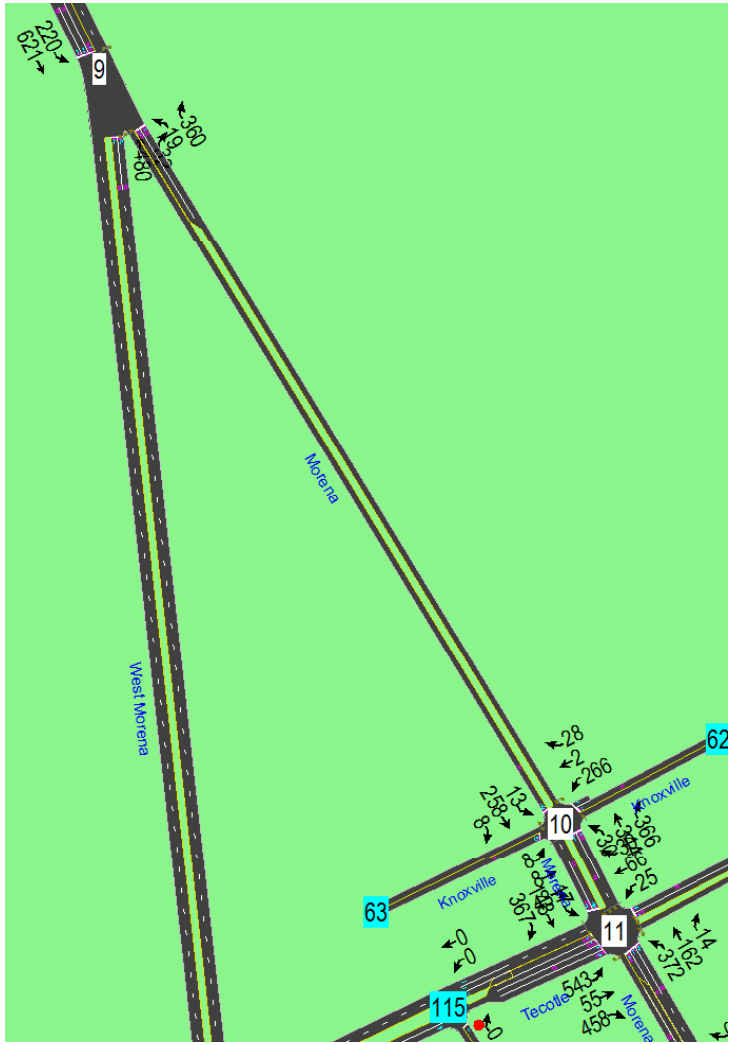

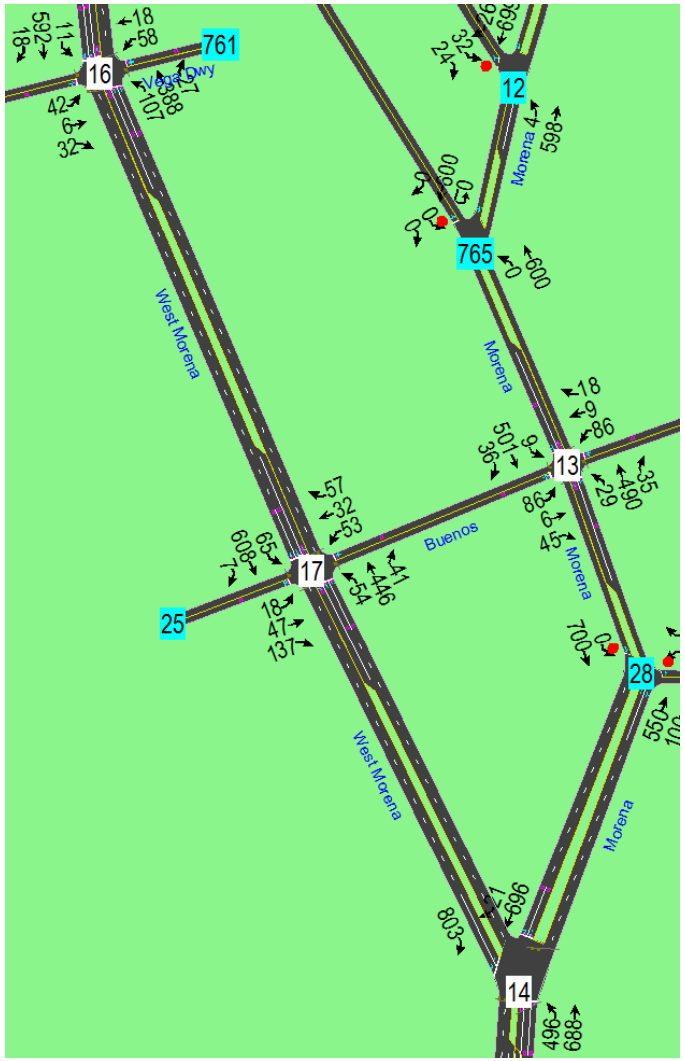

Intersections 9-17

Intersection Turning Movements

Adopted Community Plan (Year 2035) – PM Peak Hour

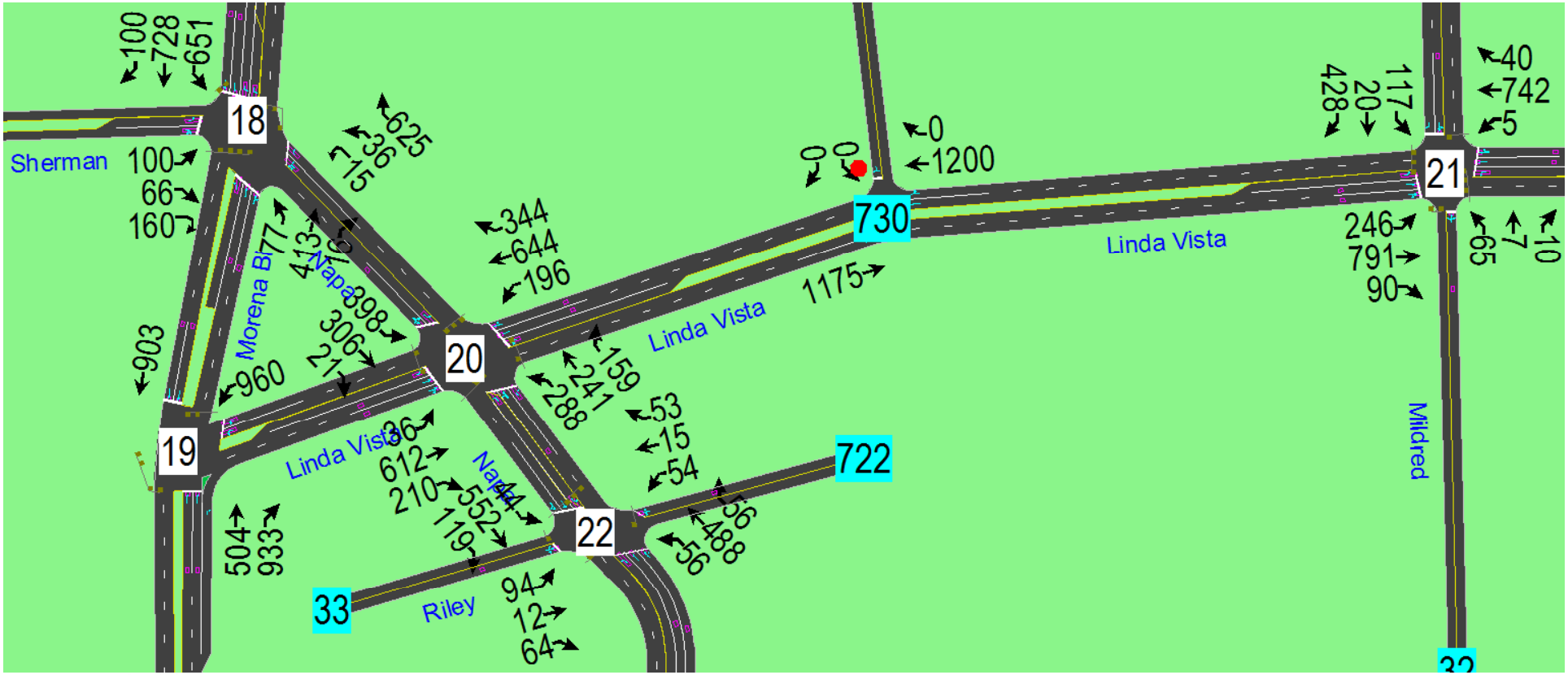

Intersections 18-22

Intersection Turning Movements

Morena Blvd Station Area Plan

Adopted Community Plan (Year 2035) – PM Peak Hour

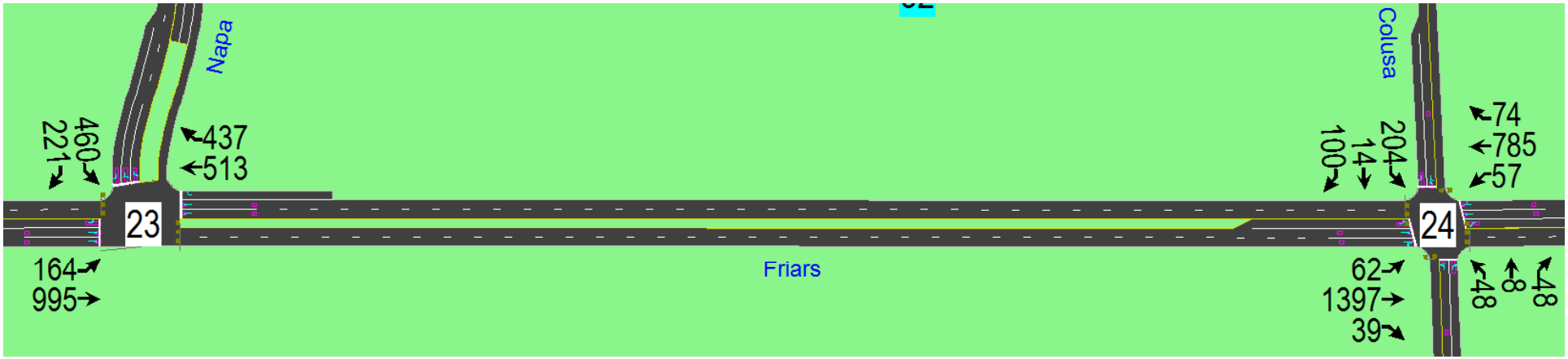

Intersections 23-24

Intersection Turning Movements

Preferred Alternative with Mid-term Mobility Network (Year 2035) – AM Peak Hour

Intersections 1-8

Intersection Turning Movements

Preferred Alternative with Mid-term Mobility Network (Year 2035) – AM Peak Hour

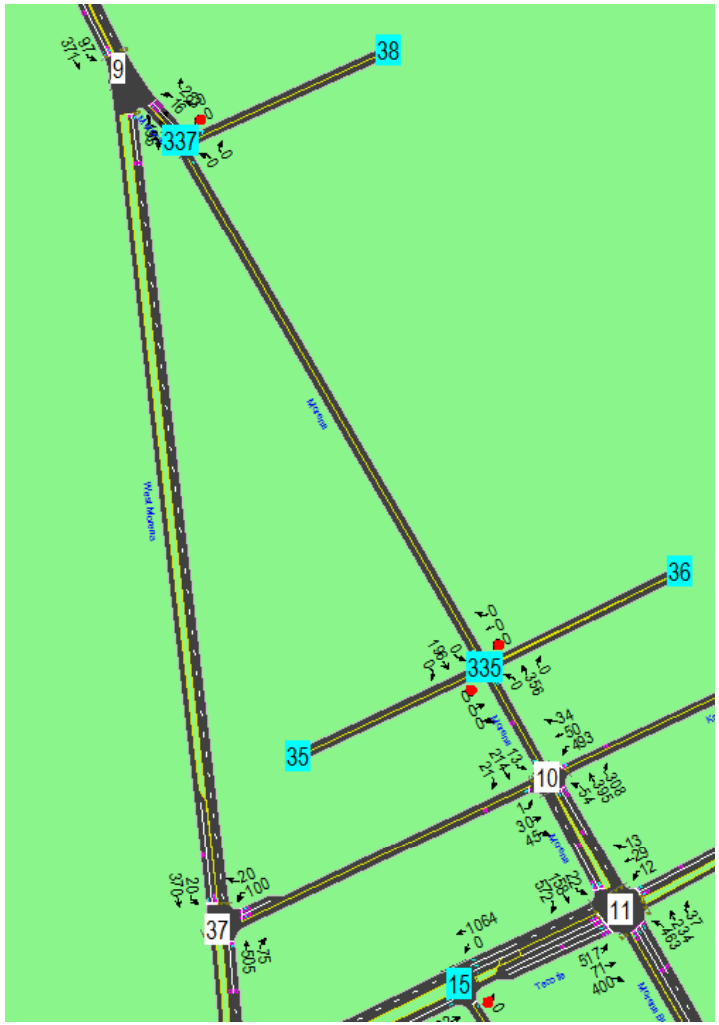

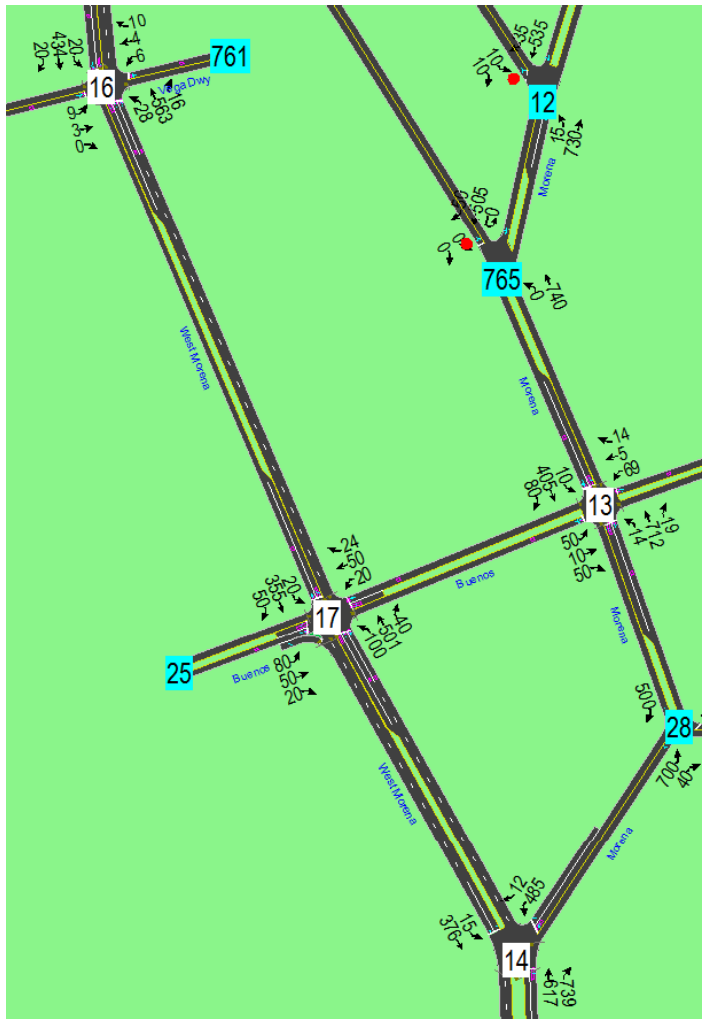

Intersections 9-17

Intersection Turning Movements

Morena Blvd Station Area Plan

Preferred Alternative with Mid-term Mobility Network (Year 2035) – AM Peak Hour

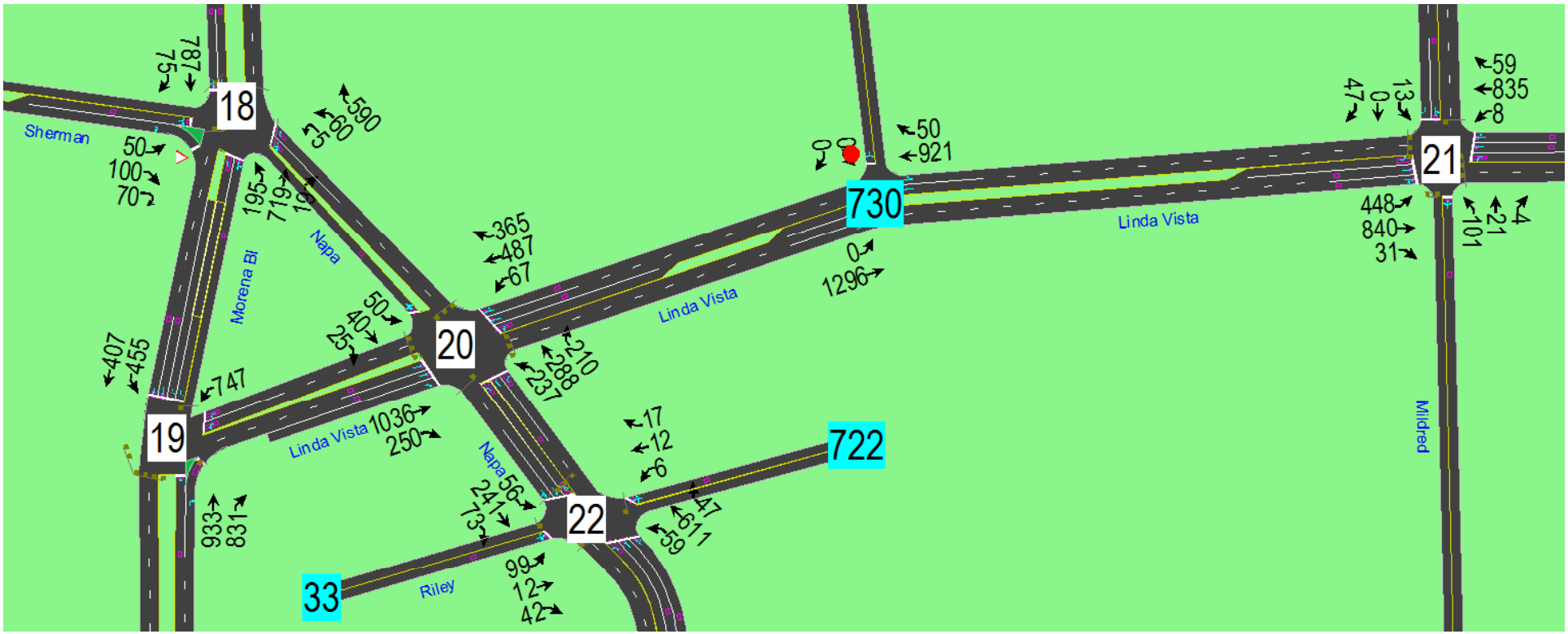

Intersections 18-22

Intersection Turning Movements

Morena Blvd Station Area Plan

Preferred Alternative with Mid-term Mobility Network (Year 2035) – AM Peak Hour

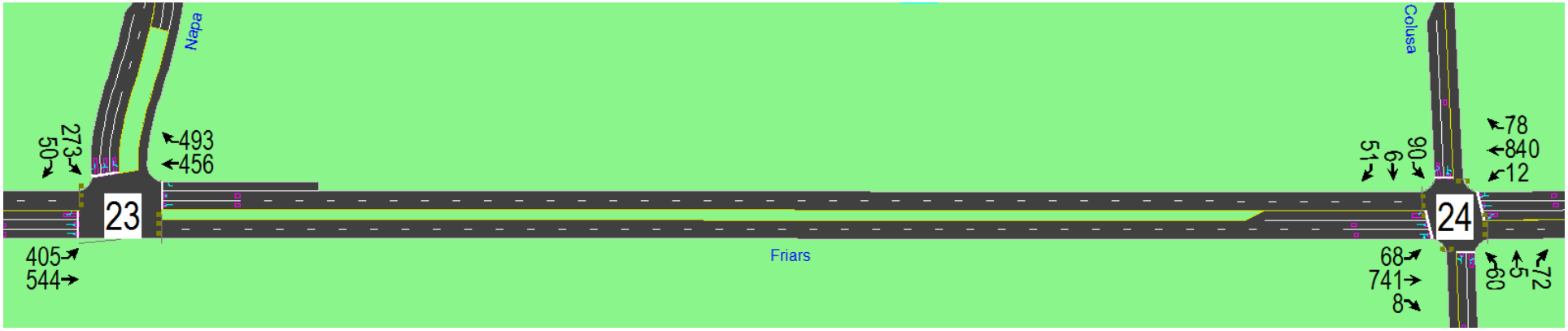

Intersections 23-24

Intersection Turning Movements

Preferred Alternative with Mid-term Mobility Network (Year 2035) – PM Peak Hour

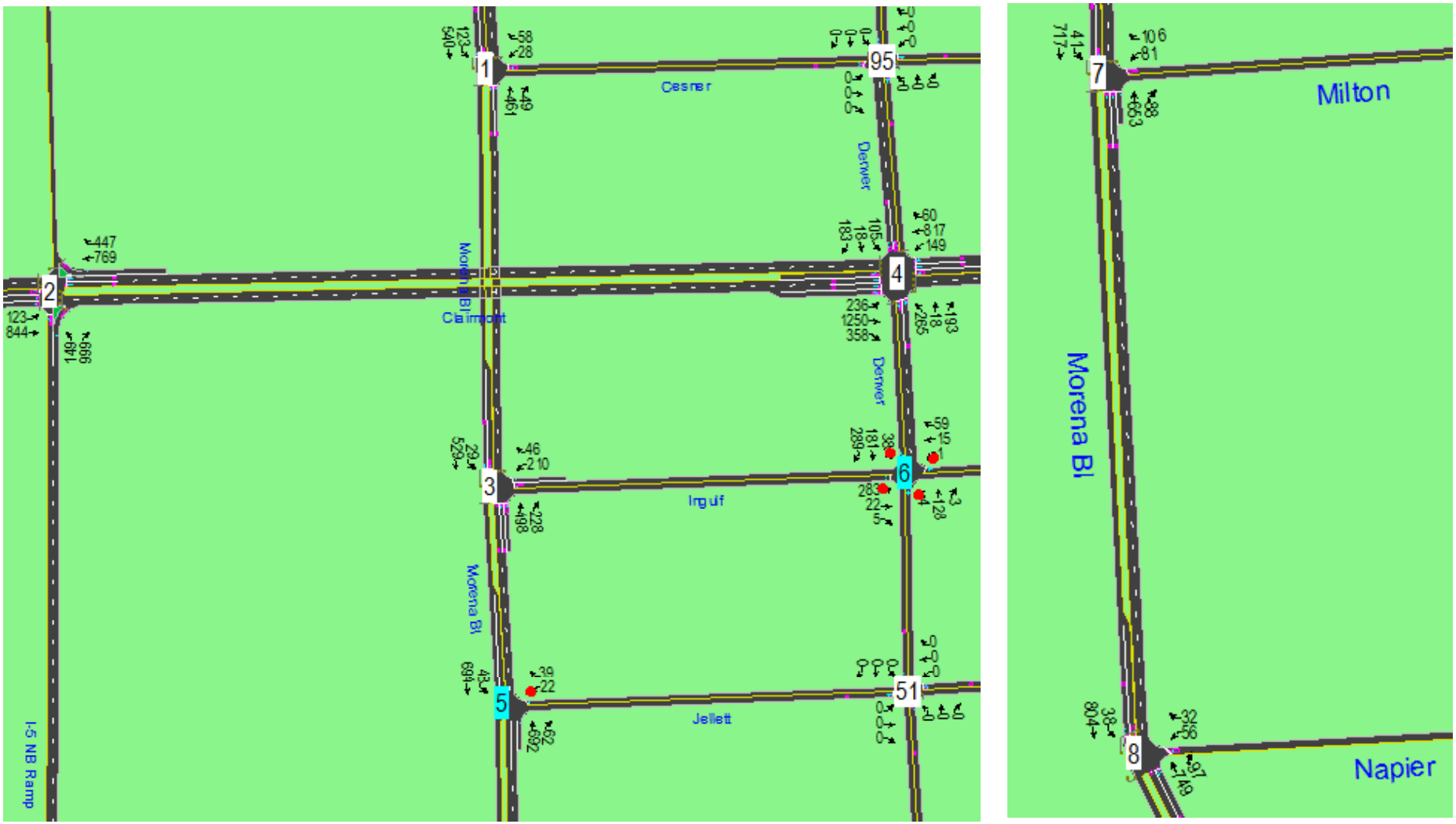

Intersections 1-8

Intersection Turning Movements

Preferred Alternative with Mid-term Mobility Network (Year 2035) – PM Peak Hour

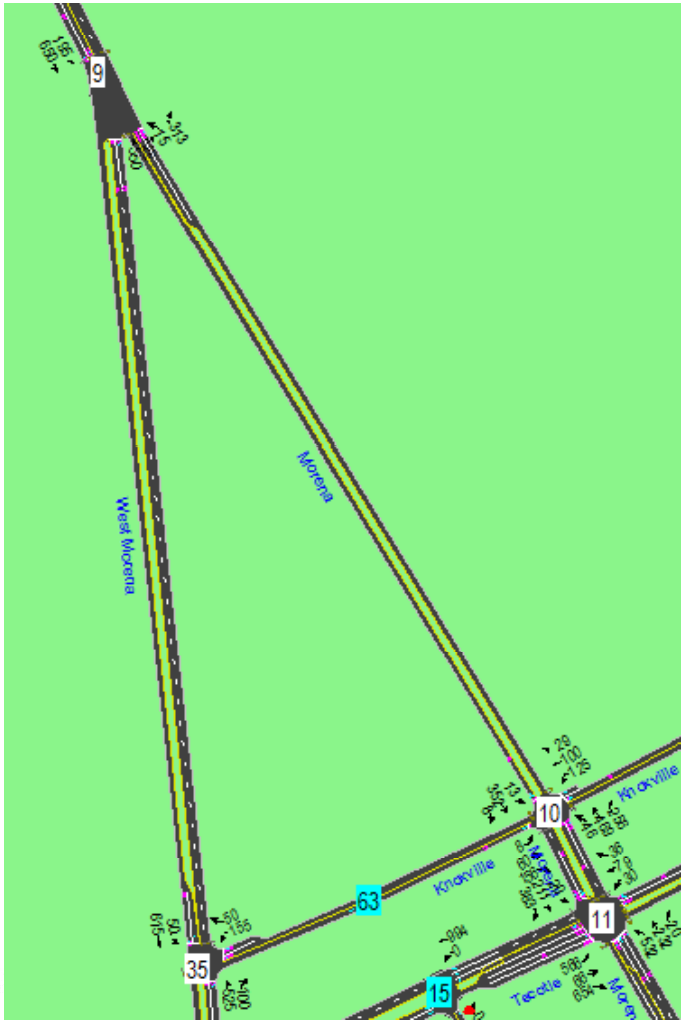

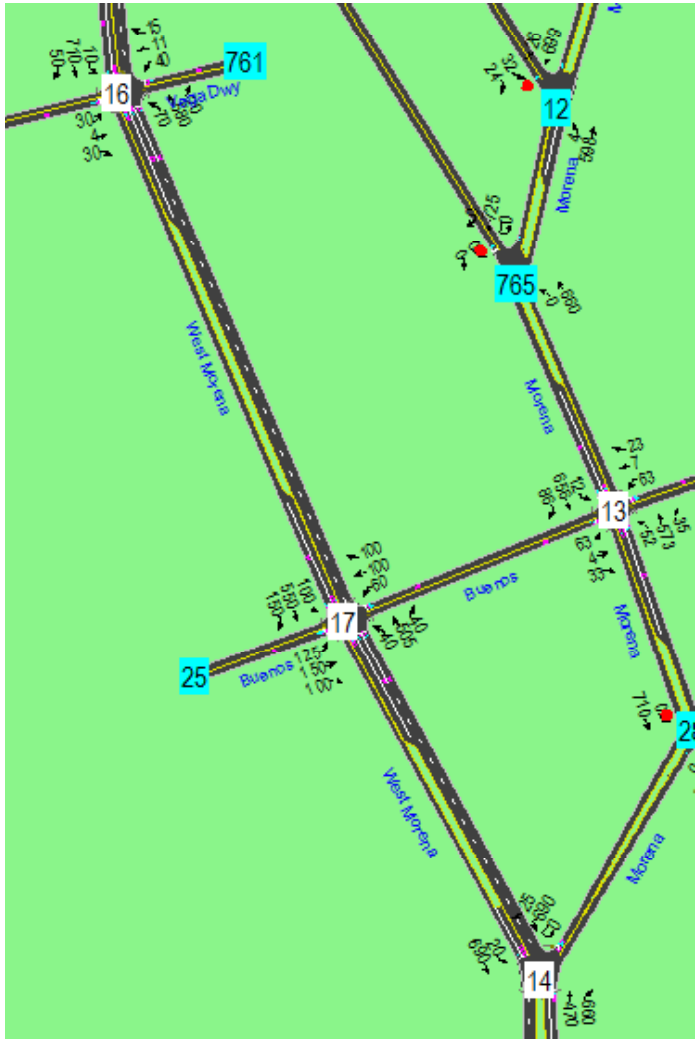

Intersections 9-17

Intersection Turning Movements

Morena Blvd Station Area Plan

Preferred Alternative with Mid-term Mobility Network (Year 2035) – PM Peak Hour

Intersections 18-22

Intersection Turning Movements

Preferred Alternative with Mid-term Mobility Network (Year 2035) – PM Peak Hour

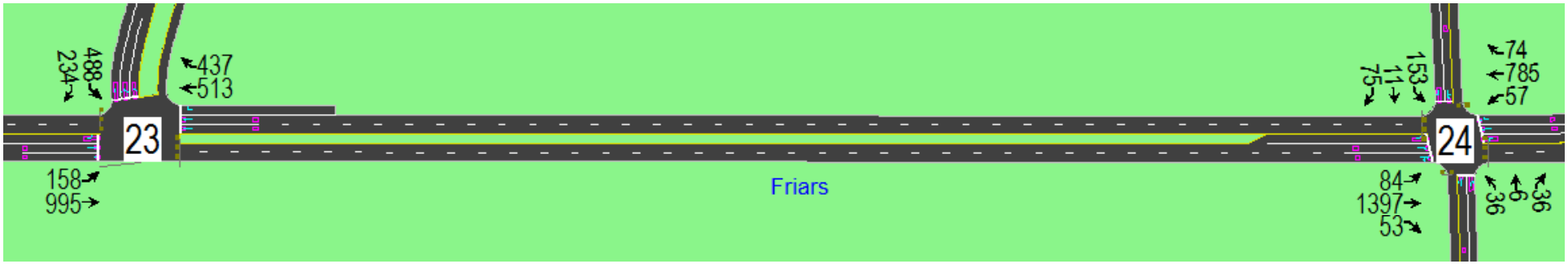

Intersections 23-24

Intersection Turning Movements

Morena Blvd Station Area Plan

Preferred Alternative with Long-term Mobility Network (Year 2035) – AM Peak Hour

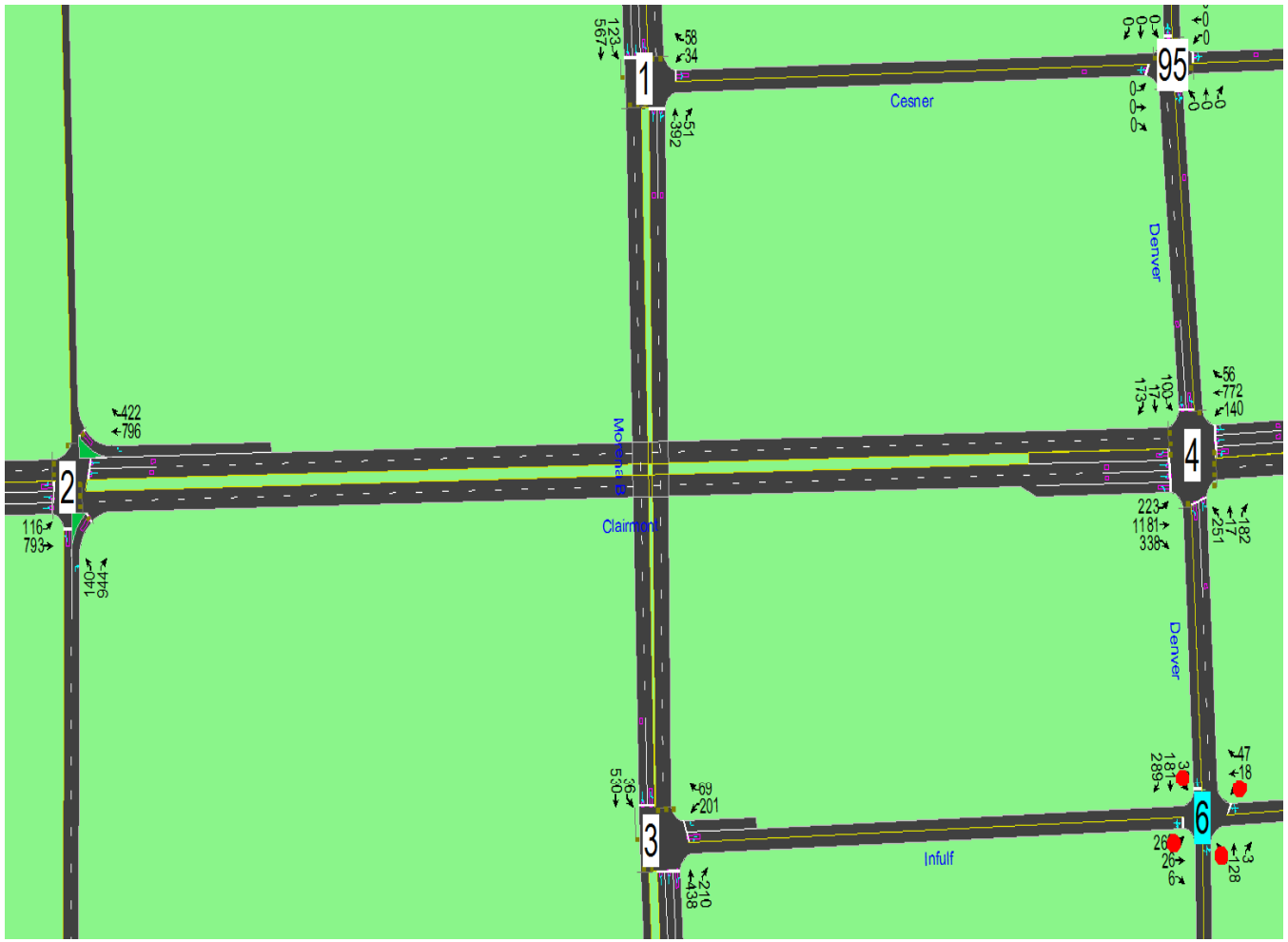

Intersections 1-8

Intersection Turning Movements

Preferred Alternative with Long-term Mobility Network (Year 2035) – AM Peak Hour

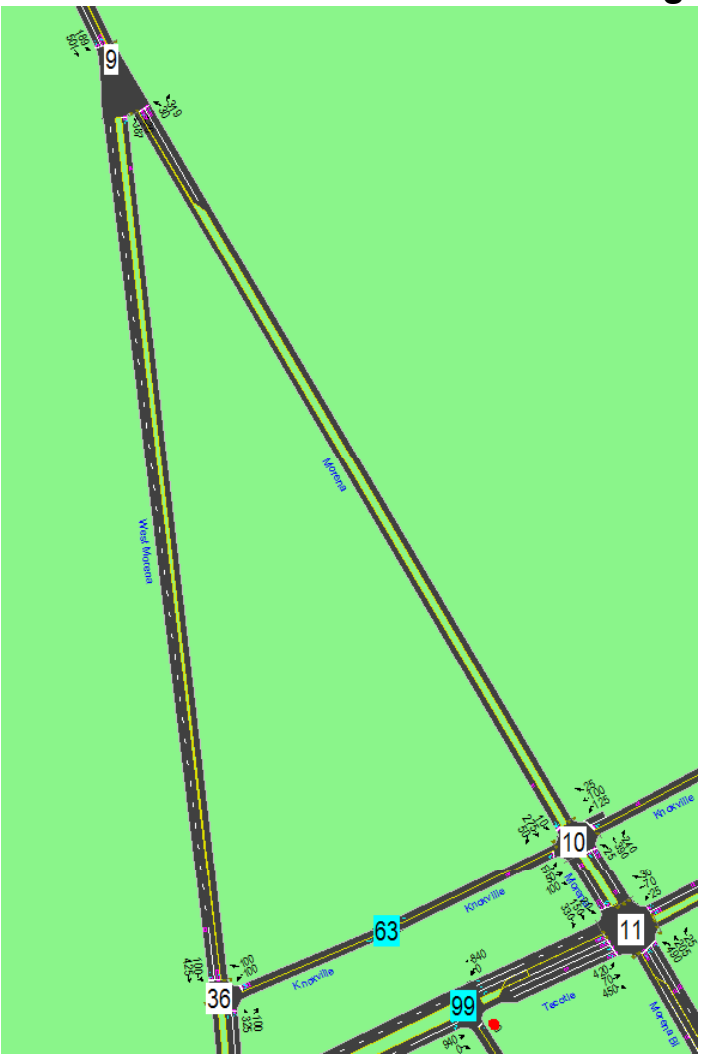

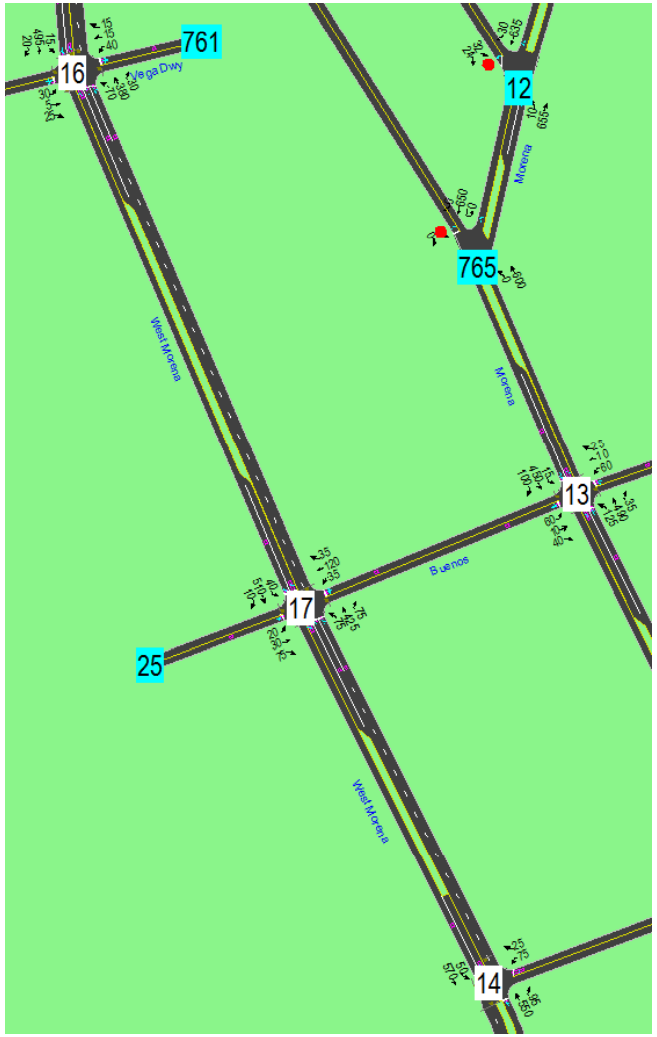

Intersections 9-14 & 16-17

Intersection Turning Movements

Preferred Alternative with Long-term Mobility Network (Year 2035) – AM Peak Hour

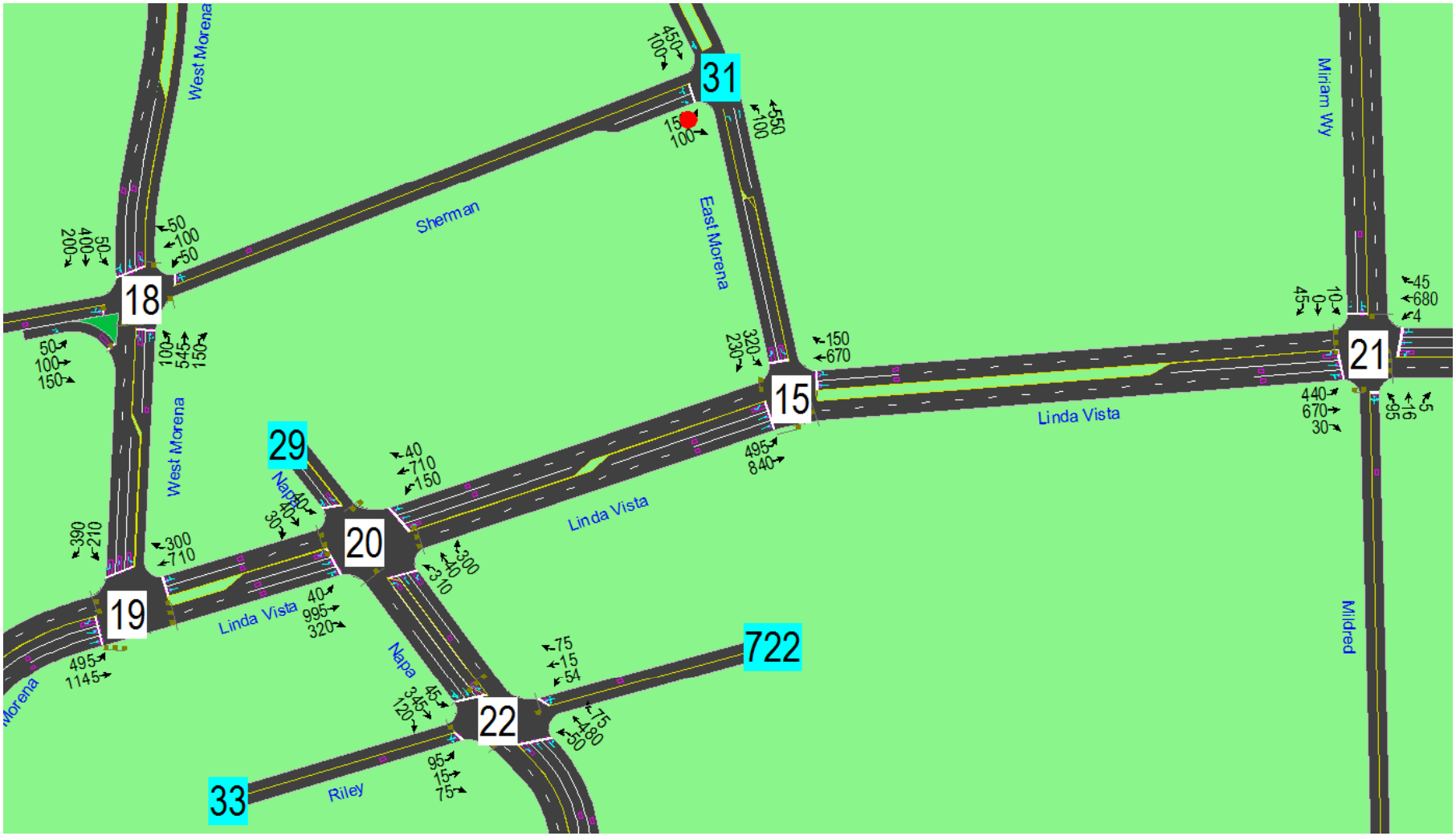

Intersections 15 & 18-22

Intersection Turning Movements

Morena Blvd Station Area Plan

Preferred Alternative with Long-term Mobility Network (Year 2035) – AM Peak Hour

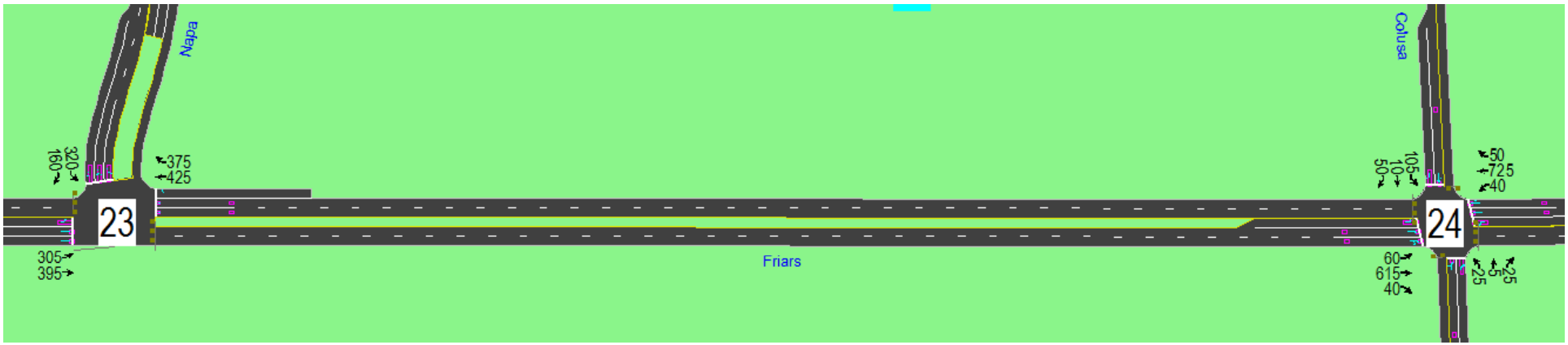

Intersections 23-24

Intersection Turning Movements

Preferred Alternative with Long-term Mobility Network (Year 2035) – PM Peak Hour

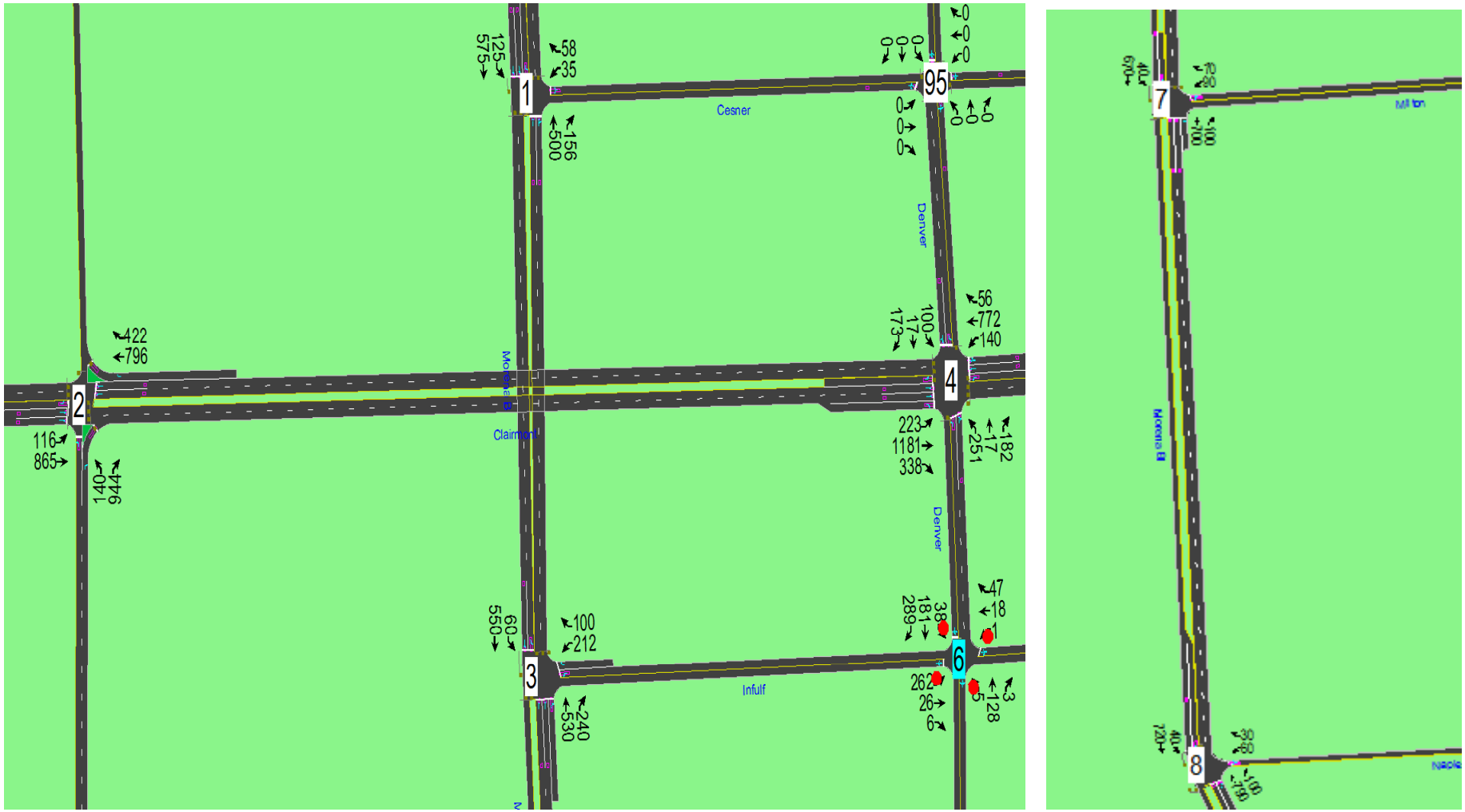

Intersections 1-8

Intersection Turning Movements

Preferred Alternative with Long-term Mobility Network (Year 2035) – PM Peak Hour

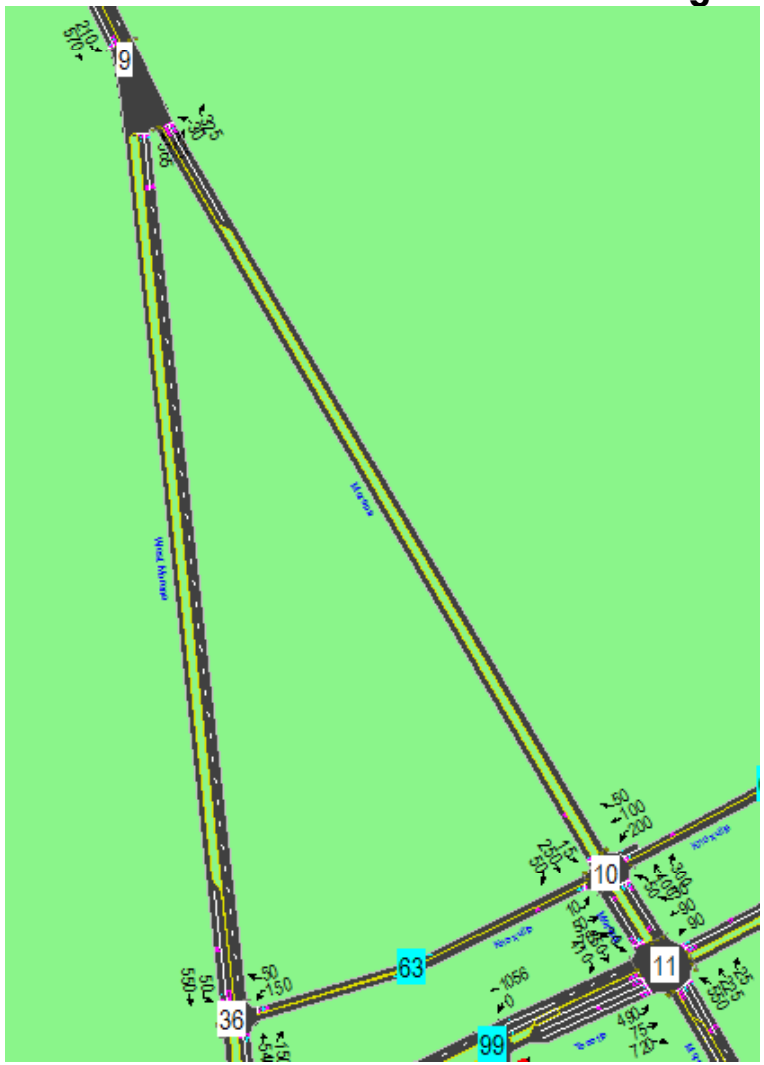

Intersections 9-14 & 16-17

Intersection Turning Movements

Morena Blvd Station Area Plan

Preferred Alternative with Long-term Mobility Network (Year 2035) – PM Peak Hour

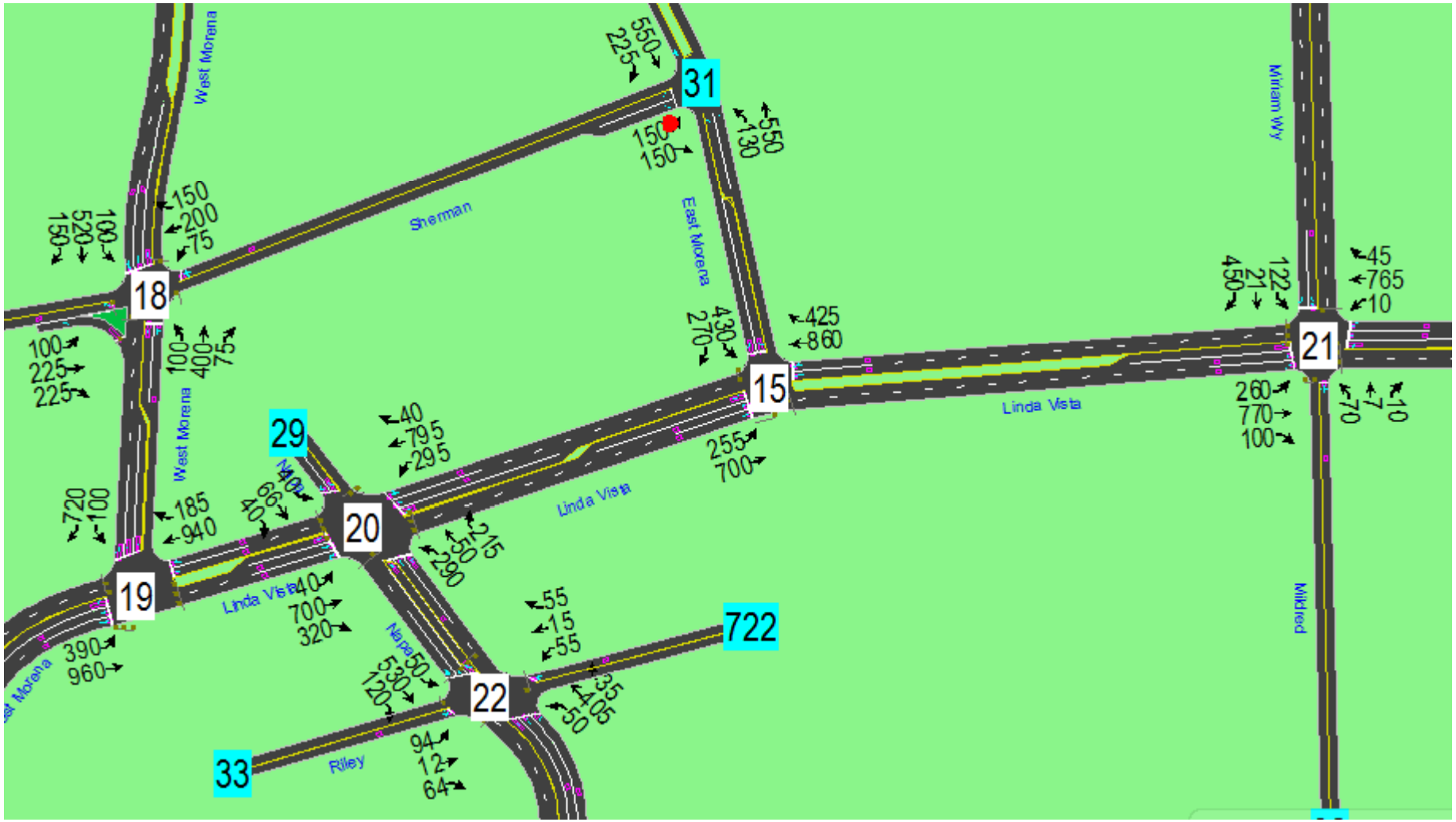

Intersections 15 & 18-22

Intersection Turning Movements

Preferred Alternative with Long-term Mobility Network (Year 2035) – PM Peak Hour

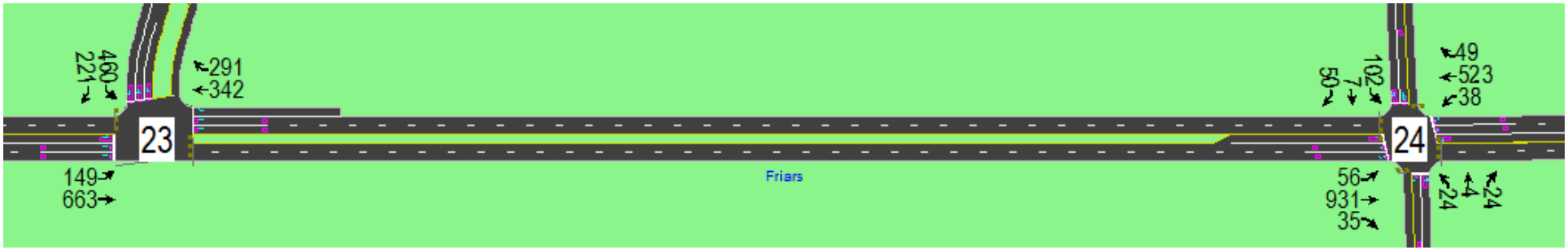

Intersections 23-24

Intersection Turning Movements

Morena Blvd Station Area Planning Study

Appendix E:

LOS Reports - Adopted Community Plan

Movement	WBL	WBR	NBT	NBR	SBL	SBT
Lane Configurations						
Volume (vph)	37	62	527	37	44	307
Ideal Flow (vphpl)	1900	1900	1900	1900	1900	1900
Total Lost time (s)	4.4		6.0		4.4	5.9
Lane Util. Factor	1.00		0.95		1.00	0.95
Frpb, ped/bikes	0.99		1.00		1.00	1.00
Flpb, ped/bikes	1.00		1.00		1.00	1.00
Frt	0.92		0.99		1.00	1.00
Flt Protected	0.98		1.00		0.95	1.00
Satd. Flow (prot)	1655		3496		1770	3539
Flt Permitted	0.98		1.00		0.95	1.00
Satd. Flow (perm)	1655		3496		1770	3539
Peak-hour factor, PHF	0.92	0.92	0.92	0.92	0.92	0.92
Growth Factor (vph)	110%	110%	103%	110%	110%	103%
Adj. Flow (vph)	44	74	590	44	53	344
RTOR Reduction (vph)	68	0	2	0	0	0
Lane Group Flow (vph)	50	0	632	0	53	344
Confl. Peds. (#/hr)				3		
Confl. Bikes (#/hr)		2	6			4
Turn Type	Prot		NA		Prot	NA
Protected Phases	8		2		1	6
Permitted Phases						
Actuated Green, G (s)	5.9		49.8		4.6	58.9
Effective Green, g (s)	5.9		49.8		4.6	58.9
Actuated g/C Ratio	0.08		0.66		0.06	0.78
Clearance Time (s)	4.4		6.0		4.4	5.9
Vehicle Extension (s)	2.0		4.4		2.0	4.2
Lane Grp Cap (vph)	130		2318		108	2775
v/s Ratio Prot	c0.03		c0.18		c0.03	0.10
v/s Ratio Perm						
v/c Ratio	0.38		0.27		0.49	0.12
Uniform Delay, d1	32.9		5.2		34.1	1.9
Progression Factor	1.00		1.00		1.00	1.00
Incremental Delay, d2	0.7		0.3		1.3	0.1
Delay (s)	33.6		5.5		35.4	2.0
Level of Service	C		A		D	A
Approach Delay (s)	33.6		5.5			6.5
Approach LOS	C		A			A

Intersection Summary			
HCM 2000 Control Delay	8.7	HCM 2000 Level of Service	A
HCM 2000 Volume to Capacity ratio	0.30		
Actuated Cycle Length (s)	75.1	Sum of lost time (s)	14.8
Intersection Capacity Utilization	38.4%	ICU Level of Service	A
Analysis Period (min)	15		

c Critical Lane Group

Movement	EBL	EBT	EBR	WBL	WBT	WBR	NBL	NBT	NBR	SBL	SBT	SBR
Lane Configurations												
Volume (vph)	250	336	0	0	837	657	34	0	311	0	0	0
Ideal Flow (vphpl)	1900	1900	1900	1900	1900	1900	1900	1900	1900	1900	1900	1900
Total Lost time (s)	5.0	5.0			5.0	5.0	5.5		5.5			
Lane Util. Factor	1.00	0.95			0.95	1.00	1.00		1.00			
Frpb, ped/bikes	1.00	1.00			1.00	1.00	1.00		0.99			
Flpb, ped/bikes	1.00	1.00			1.00	1.00	1.00		1.00			
Frt	1.00	1.00			1.00	0.85	1.00		0.85			
Flt Protected	0.95	1.00			1.00	1.00	0.95		1.00			
Satd. Flow (prot)	1770	3539			3539	1583	1770		1564			
Flt Permitted	0.95	1.00			1.00	1.00	0.95		1.00			
Satd. Flow (perm)	1770	3539			3539	1583	1770		1564			
Peak-hour factor, PHF	0.97	0.97	0.97	0.97	0.97	0.97	0.97	0.97	0.97	0.97	0.97	0.97
Growth Factor (vph)	140%	140%	140%	140%	140%	140%	140%	140%	140%	140%	140%	140%
Adj. Flow (vph)	361	485	0	0	1208	948	49	0	449	0	0	0
RTOR Reduction (vph)	0	0	0	0	0	433	0	0	0	0	0	0
Lane Group Flow (vph)	361	485	0	0	1208	515	49	0	449	0	0	0
Confl. Peds. (#/hr)						6			1			
Confl. Bikes (#/hr)		4			1							
Turn Type	Prot	NA			NA	Prot	Prot		custom			
Protected Phases	7	4			8	8	2		2			
Permitted Phases									4			
Actuated Green, G (s)	18.3	48.5			25.2	25.2	6.9		55.4			
Effective Green, g (s)	18.3	48.5			25.2	25.2	6.9		55.4			
Actuated g/C Ratio	0.28	0.74			0.38	0.38	0.10		0.84			
Clearance Time (s)	5.0	5.0			5.0	5.0	5.5		5.5			
Vehicle Extension (s)	2.0	2.0			2.0	2.0	2.0		2.0			
Lane Grp Cap (vph)	491	2604			1353	605	185		1445			
v/s Ratio Prot	c0.20	0.14			c0.34	0.33	0.03		c0.03			
v/s Ratio Perm									0.25			
v/c Ratio	0.74	0.19			0.89	0.85	0.26		0.31			
Uniform Delay, d1	21.6	2.7			19.1	18.6	27.2		1.1			
Progression Factor	1.00	1.00			1.00	1.00	1.00		1.00			
Incremental Delay, d2	4.9	0.0			7.7	10.7	0.3		0.0			
Delay (s)	26.5	2.7			26.8	29.4	27.4		1.2			
Level of Service	C	A			C	C	C		A			
Approach Delay (s)		12.8			27.9			3.8			0.0	
Approach LOS		B			C			A			A	

Intersection Summary			
HCM 2000 Control Delay	20.8	HCM 2000 Level of Service	C
HCM 2000 Volume to Capacity ratio	0.77		
Actuated Cycle Length (s)	65.9	Sum of lost time (s)	15.5
Intersection Capacity Utilization	85.3%	ICU Level of Service	E
Analysis Period (min)	15		

c Critical Lane Group

Movement	WBL	WBR	NBT	NBR	SBL	SBT
Lane Configurations						
Volume (vph)	85	36	526	149	13	333
Ideal Flow (vphpl)	1900	1900	1900	1900	1900	1900
Total Lost time (s)	4.9		5.3	5.3	4.4	5.0
Lane Util. Factor	0.97		0.95	1.00	1.00	0.95
Frpb, ped/bikes	0.99		1.00	0.98	1.00	1.00
Flpb, ped/bikes	1.00		1.00	1.00	1.00	1.00
Frt	0.96		1.00	0.85	1.00	1.00
Flt Protected	0.97		1.00	1.00	0.95	1.00
Satd. Flow (prot)	2980		3185	1393	1593	3185
Flt Permitted	0.97		1.00	1.00	0.95	1.00
Satd. Flow (perm)	2980		3185	1393	1593	3185
Peak-hour factor, PHF	0.90	0.90	0.90	0.90	0.90	0.90
Growth Factor (vph)	174%	174%	106%	174%	174%	106%
Adj. Flow (vph)	164	70	620	288	25	392
RTOR Reduction (vph)	62	0	0	71	0	0
Lane Group Flow (vph)	172	0	620	217	25	392
Confl. Peds. (#/hr)				1		
Confl. Bikes (#/hr)		1	5	1		4
Turn Type	Prot		NA	Perm	Prot	NA
Protected Phases	8		2		1	6
Permitted Phases				2		
Actuated Green, G (s)	8.5		50.4	50.4	2.7	57.8
Effective Green, g (s)	8.5		50.4	50.4	2.7	57.8
Actuated g/C Ratio	0.11		0.66	0.66	0.04	0.76
Clearance Time (s)	4.9		5.3	5.3	4.4	5.0
Vehicle Extension (s)	2.0		4.2	4.2	2.0	4.0
Lane Grp Cap (vph)	332		2106	921	56	2415
v/s Ratio Prot	c0.06		c0.19		c0.02	0.12
v/s Ratio Perm				0.16		
v/c Ratio	0.52		0.29	0.24	0.45	0.16
Uniform Delay, d1	31.9		5.4	5.2	36.0	2.5
Progression Factor	1.00		1.00	1.00	1.00	1.00
Incremental Delay, d2	0.6		0.4	0.6	2.1	0.1
Delay (s)	32.5		5.8	5.8	38.1	2.7
Level of Service	C		A	A	D	A
Approach Delay (s)	32.5		5.8			4.8
Approach LOS	C		A			A

Intersection Summary			
HCM 2000 Control Delay	9.5	HCM 2000 Level of Service	A
HCM 2000 Volume to Capacity ratio	0.33		
Actuated Cycle Length (s)	76.2	Sum of lost time (s)	14.6
Intersection Capacity Utilization	36.0%	ICU Level of Service	A
Analysis Period (min)	15		

c Critical Lane Group

Movement	EBL	EBT	EBR	WBL	WBT	WBR	NBL	NBT	NBR	SBL	SBT	SBR
Lane Configurations												
Volume (vph)	105	362	133	77	899	24	286	15	90	30	12	252
Ideal Flow (vphpl)	1900	1900	1900	1900	1900	1900	1900	1900	1900	1900	1900	1900
Total Lost time (s)	4.4	5.1	5.1	4.4	4.4		4.4	4.9		4.4	4.9	
Lane Util. Factor	1.00	0.95	1.00	1.00	0.95		1.00	1.00		1.00	1.00	
Frpb, ped/bikes	1.00	1.00	0.97	1.00	1.00		1.00	0.98		1.00	0.99	
Flpb, ped/bikes	1.00	1.00	1.00	1.00	1.00		1.00	1.00		1.00	1.00	
Frt	1.00	1.00	0.85	1.00	1.00		1.00	0.87		1.00	0.86	
Flt Protected	0.95	1.00	1.00	0.95	1.00		0.95	1.00		0.95	1.00	
Satd. Flow (prot)	1593	3185	1377	1593	3170		1593	1437		1593	1415	
Flt Permitted	0.95	1.00	1.00	0.95	1.00		0.95	1.00		0.95	1.00	
Satd. Flow (perm)	1593	3185	1377	1593	3170		1593	1437		1593	1415	
Peak-hour factor, PHF	0.98	0.98	0.98	0.98	0.98	0.98	0.98	0.98	0.98	0.98	0.98	0.98
Growth Factor (vph)	140%	140%	140%	140%	140%	140%	140%	140%	140%	140%	140%	140%
Adj. Flow (vph)	150	517	190	110	1284	34	409	21	129	43	17	360
RTOR Reduction (vph)	0	0	126	0	1	0	0	91	0	0	259	0
Lane Group Flow (vph)	150	517	64	110	1317	0	409	59	0	43	118	0
Confl. Peds. (#/hr)			4			5			9			3
Confl. Bikes (#/hr)			3		2	1					2	1
Turn Type	Prot	NA	Perm	Prot	NA		Prot	NA		Prot	NA	
Protected Phases	7	4		3	8		5	2		1	6	
Permitted Phases			4									
Actuated Green, G (s)	11.8	29.7	29.7	8.7	27.3		16.0	25.9		4.5	14.4	
Effective Green, g (s)	11.8	29.7	29.7	8.7	27.3		16.0	25.9		4.5	14.4	
Actuated g/C Ratio	0.13	0.34	0.34	0.10	0.31		0.18	0.30		0.05	0.16	
Clearance Time (s)	4.4	5.1	5.1	4.4	4.4		4.4	4.9		4.4	4.9	
Vehicle Extension (s)	2.0	4.3	4.3	2.0	3.9		2.0	2.0		2.0	2.0	
Lane Grp Cap (vph)	214	1079	466	158	987		290	424		81	232	
v/s Ratio Prot	c0.09	c0.16		0.07	c0.42		c0.26	0.04		0.03	c0.08	
v/s Ratio Perm			0.05									
v/c Ratio	0.70	0.48	0.14	0.70	1.33		1.41	0.14		0.53	0.51	
Uniform Delay, d1	36.2	22.8	20.1	38.2	30.1		35.8	22.7		40.5	33.4	
Progression Factor	1.00	1.00	1.00	1.00	1.00		1.00	1.00		1.00	1.00	
Incremental Delay, d2	8.2	1.5	0.6	10.2	157.2		204.0	0.1		3.3	0.6	
Delay (s)	44.4	24.4	20.7	48.4	187.4		239.8	22.7		43.8	34.0	
Level of Service	D	C	C	D	F		F	C		D	C	
Approach Delay (s)		27.1			176.7			181.5			35.0	
Approach LOS		C			F			F			D	

Intersection Summary			
HCM 2000 Control Delay	120.0	HCM 2000 Level of Service	F
HCM 2000 Volume to Capacity ratio	1.07		
Actuated Cycle Length (s)	87.6	Sum of lost time (s)	18.8
Intersection Capacity Utilization	114.5%	ICU Level of Service	H
Analysis Period (min)	15		

c Critical Lane Group

Movement	WBL	WBR	NBT	NBR	SBL	SBT
Lane Configurations						
Volume (vph)	88	71	629	103	59	339
Ideal Flow (vphpl)	1900	1900	1900	1900	1900	1900
Total Lost time (s)	5.1		5.4		4.4	5.3
Lane Util. Factor	1.00		0.95		1.00	0.95
Frpb, ped/bikes	1.00		1.00		1.00	1.00
Flpb, ped/bikes	1.00		1.00		1.00	1.00
Frt	0.94		0.98		1.00	1.00
Flt Protected	0.97		1.00		0.95	1.00
Satd. Flow (prot)	1703		3449		1770	3539
Flt Permitted	0.97		1.00		0.95	1.00
Satd. Flow (perm)	1703		3449		1770	3539
Peak-hour factor, PHF	0.95	0.95	0.95	0.95	0.95	0.95
Growth Factor (vph)	117%	117%	117%	117%	117%	117%
Adj. Flow (vph)	108	87	775	127	73	418
RTOR Reduction (vph)	38	0	9	0	0	0
Lane Group Flow (vph)	157	0	893	0	73	418
Confl. Peds. (#/hr)				7	7	
Confl. Bikes (#/hr)			8			2
Parking (#/hr)				0		
Turn Type	Prot		NA		Prot	NA
Protected Phases	8		2		1	6
Permitted Phases						
Actuated Green, G (s)	9.6		28.8		4.5	37.8
Effective Green, g (s)	9.6		28.8		4.5	37.8
Actuated g/C Ratio	0.17		0.50		0.08	0.65
Clearance Time (s)	5.1		5.4		4.4	5.3
Vehicle Extension (s)	2.0		4.0		2.0	4.0
Lane Grp Cap (vph)	282		1718		137	2314
v/s Ratio Prot	c0.09		c0.26		c0.04	0.12
v/s Ratio Perm						
v/c Ratio	0.56		0.52		0.53	0.18
Uniform Delay, d1	22.2		9.8		25.6	3.9
Progression Factor	1.00		1.00		1.00	1.00
Incremental Delay, d2	1.4		0.4		2.0	0.1
Delay (s)	23.5		10.2		27.6	4.0
Level of Service	C		B		C	A
Approach Delay (s)	23.5		10.2			7.5
Approach LOS	C		B			A

Intersection Summary			
HCM 2000 Control Delay	11.0	HCM 2000 Level of Service	B
HCM 2000 Volume to Capacity ratio	0.53		
Actuated Cycle Length (s)	57.8	Sum of lost time (s)	14.9
Intersection Capacity Utilization	51.3%	ICU Level of Service	A
Analysis Period (min)	15		
c Critical Lane Group			

Movement	WBL	WBR	NBT	NBR	SBL	SBT
Lane Configurations						
Volume (vph)	33	25	713	24	4	414
Ideal Flow (vphpl)	1900	1900	1900	1900	1900	1900
Total Lost time (s)	4.9		5.4		4.4	5.3
Lane Util. Factor	1.00		0.95		1.00	0.95
Frpb, ped/bikes	1.00		1.00		1.00	1.00
Flpb, ped/bikes	1.00		1.00		1.00	1.00
Frt	0.94		0.99		1.00	1.00
Flt Protected	0.97		1.00		0.95	1.00
Satd. Flow (prot)	1706		3517		1765	3539
Flt Permitted	0.97		1.00		0.95	1.00
Satd. Flow (perm)	1706		3517		1765	3539
Peak-hour factor, PHF	0.90	0.90	0.90	0.90	0.90	0.90
Growth Factor (vph)	124%	124%	117%	124%	124%	124%
Adj. Flow (vph)	45	34	927	33	6	570
RTOR Reduction (vph)	31	0	2	0	0	0
Lane Group Flow (vph)	48	0	958	0	6	570
Confl. Peds. (#/hr)				6	6	
Confl. Bikes (#/hr)			8			5
Turn Type	Prot		NA		Prot	NA
Protected Phases	8		2		1	6
Permitted Phases						
Actuated Green, G (s)	4.9		33.1		0.8	38.4
Effective Green, g (s)	4.9		33.1		0.8	38.4
Actuated g/C Ratio	0.09		0.62		0.01	0.72
Clearance Time (s)	4.9		5.4		4.4	5.3
Vehicle Extension (s)	2.0		4.3		2.0	4.0
Lane Grp Cap (vph)	156		2175		26	2540
v/s Ratio Prot	c0.03		c0.27		0.00	c0.16
v/s Ratio Perm						
v/c Ratio	0.31		0.44		0.23	0.22
Uniform Delay, d1	22.7		5.3		26.0	2.5
Progression Factor	1.00		1.00		1.00	1.00
Incremental Delay, d2	0.4		0.2		1.7	0.1
Delay (s)	23.1		5.6		27.7	2.6
Level of Service	C		A		C	A
Approach Delay (s)	23.1		5.6			2.9
Approach LOS	C		A			A

Intersection Summary			
HCM 2000 Control Delay	5.5	HCM 2000 Level of Service	A
HCM 2000 Volume to Capacity ratio	0.43		
Actuated Cycle Length (s)	53.5	Sum of lost time (s)	14.7
Intersection Capacity Utilization	36.8%	ICU Level of Service	A
Analysis Period (min)	15		

c Critical Lane Group

Movement	NBT	NBR	SBL	SBT	NWL	NWR
Lane Configurations						
Volume (vph)	450	21	92	334	8	280
Ideal Flow (vphpl)	1900	1900	1900	1900	1900	1900
Total Lost time (s)	5.5		5.5	5.5	5.5	5.5
Lane Util. Factor	0.95		1.00	0.95	1.00	1.00
Frpb, ped/bikes	1.00		1.00	1.00	1.00	0.98
Flpb, ped/bikes	1.00		1.00	1.00	1.00	1.00
Frt	0.99		1.00	1.00	1.00	0.85
Flt Protected	1.00		0.95	1.00	0.95	1.00
Satd. Flow (prot)	3514		1770	3539	1770	1552
Flt Permitted	1.00		0.95	1.00	0.95	1.00
Satd. Flow (perm)	3514		1770	3539	1770	1552
Peak-hour factor, PHF	0.88	0.88	0.88	0.88	0.88	0.88
Growth Factor (vph)	120%	115%	115%	140%	115%	115%
Adj. Flow (vph)	614	27	120	531	10	366
RTOR Reduction (vph)	3	0	0	0	0	306
Lane Group Flow (vph)	638	0	120	531	10	60
Confl. Peds. (#/hr)		1	1			10
Confl. Bikes (#/hr)	5			5		
Turn Type	NA		Prot	NA	Prot	Perm
Protected Phases	2		1	6	8	
Permitted Phases						8
Actuated Green, G (s)	13.9		6.5	25.9	7.2	7.2
Effective Green, g (s)	13.9		6.5	25.9	7.2	7.2
Actuated g/C Ratio	0.32		0.15	0.59	0.16	0.16
Clearance Time (s)	5.5		5.5	5.5	5.5	5.5
Vehicle Extension (s)	2.0		2.0	2.0	2.0	2.0
Lane Grp Cap (vph)	1107		260	2078	288	253
v/s Ratio Prot	c0.18		c0.07	0.15	0.01	
v/s Ratio Perm						c0.04
v/c Ratio	0.58		0.46	0.26	0.03	0.24
Uniform Delay, d1	12.6		17.2	4.4	15.5	16.1
Progression Factor	1.00		1.00	1.00	1.00	1.00
Incremental Delay, d2	0.5		0.5	0.0	0.0	0.2
Delay (s)	13.1		17.7	4.4	15.5	16.2
Level of Service	B		B	A	B	B
Approach Delay (s)	13.1			6.9	16.2	
Approach LOS	B			A	B	

Intersection Summary			
HCM 2000 Control Delay	11.4	HCM 2000 Level of Service	B
HCM 2000 Volume to Capacity ratio	0.46		
Actuated Cycle Length (s)	44.1	Sum of lost time (s)	16.5
Intersection Capacity Utilization	45.8%	ICU Level of Service	A
Analysis Period (min)	15		

c Critical Lane Group

Movement	EBL	EBT	EBR	WBL	WBT	WBR	NBL	NBT	NBR	SBL	SBT	SBR
Lane Configurations												
Volume (vph)	1	0	9	448	1	28	27	329	275	11	178	7
Ideal Flow (vphpl)	1900	1900	1900	1900	1900	1900	1900	1900	1900	1900	1900	1900
Total Lost time (s)		4.5			4.5			4.5	4.5		4.5	
Lane Util. Factor		1.00			1.00			1.00	1.00		1.00	
Frpb, ped/bikes		0.99			1.00			1.00	0.96		1.00	
Flpb, ped/bikes		1.00			1.00			1.00	1.00		1.00	
Frt		0.88			0.99			1.00	0.85		0.99	
Flt Protected		1.00			0.96			0.99	1.00		1.00	
Satd. Flow (prot)		1607			1761			1846	1517		1835	
Flt Permitted		0.96			0.71			0.89	1.00		0.97	
Satd. Flow (perm)		1554			1317			1657	1517		1780	
Peak-hour factor, PHF	0.86	0.86	0.86	0.86	0.86	0.86	0.86	0.86	0.86	0.86	0.86	0.86
Growth Factor (vph)	300%	300%	300%	115%	300%	115%	300%	115%	115%	115%	130%	300%
Adj. Flow (vph)	3	0	31	599	3	37	94	440	368	15	269	24
RTOR Reduction (vph)	0	17	0	0	4	0	0	0	231	0	6	0
Lane Group Flow (vph)	0	17	0	0	635	0	0	534	137	0	302	0
Confl. Peds. (#/hr)	4		1	1		4	2		13	13		2
Confl. Bikes (#/hr)				2	3			2	1		1	
Turn Type	Perm	NA		Perm	NA		Perm	NA	Perm	Perm	NA	
Protected Phases		2			6			8			4	
Permitted Phases	2			6			8		8	4		
Actuated Green, G (s)		25.5			25.5			20.5	20.5		20.5	
Effective Green, g (s)		25.5			25.5			20.5	20.5		20.5	
Actuated g/C Ratio		0.46			0.46			0.37	0.37		0.37	
Clearance Time (s)		4.5			4.5			4.5	4.5		4.5	
Vehicle Extension (s)		2.0			2.0			2.0	2.0		2.0	
Lane Grp Cap (vph)		720			610			617	565		663	
v/s Ratio Prot												
v/s Ratio Perm		0.01			c0.48			c0.32	0.09		0.17	
v/c Ratio		0.02			1.04			0.87	0.24		0.46	
Uniform Delay, d1		8.0			14.8			16.0	11.9		13.0	
Progression Factor		1.00			1.00			1.00	1.00		1.00	
Incremental Delay, d2		0.0			47.4			15.0	1.0		2.3	
Delay (s)		8.0			62.1			31.0	12.9		15.3	
Level of Service		A			E			C	B		B	
Approach Delay (s)		8.0			62.1			23.6			15.3	
Approach LOS		A			E			C			B	

Intersection Summary			
HCM 2000 Control Delay	35.0	HCM 2000 Level of Service	D
HCM 2000 Volume to Capacity ratio	0.96		
Actuated Cycle Length (s)	55.0	Sum of lost time (s)	9.0
Intersection Capacity Utilization	87.2%	ICU Level of Service	E
Analysis Period (min)	15		

c Critical Lane Group

Movement	EBL	EBT	EBR	WBL	WBT	WBR	NBL	NBT	NBR	SBL	SBT	SBR
Lane Configurations												
Volume (vph)	431	59	333	10	24	11	386	195	31	18	132	477
Ideal Flow (vphpl)	1900	1900	1900	1900	1900	1900	1900	1900	1900	1900	1900	1900
Total Lost time (s)	5.0	5.5	5.5	5.0	5.0		5.5	5.5			5.5	5.5
Lane Util. Factor	0.97	1.00	1.00	1.00	1.00		0.91	0.91			0.95	0.95
Frpb, ped/bikes	1.00	1.00	0.98	1.00	0.99		1.00	1.00			0.99	0.99
Flpb, ped/bikes	1.00	1.00	1.00	1.00	1.00		1.00	1.00			1.00	1.00
Frt	1.00	1.00	0.85	1.00	0.95		1.00	0.99			0.91	0.85
Flt Protected	0.95	1.00	1.00	0.95	1.00		0.95	0.98			1.00	1.00
Satd. Flow (prot)	3433	1863	1547	1770	1762		1610	3257			1599	1485
Flt Permitted	0.95	1.00	1.00	0.95	1.00		0.95	0.98			1.00	1.00
Satd. Flow (perm)	3433	1863	1547	1770	1762		1610	3257			1599	1485
Peak-hour factor, PHF	0.93	0.93	0.93	0.93	0.93	0.93	0.93	0.93	0.93	0.93	0.93	0.93
Growth Factor (vph)	129%	100%	84%	100%	100%	100%	92%	92%	110%	129%	110%	129%
Adj. Flow (vph)	598	63	301	11	26	12	382	193	37	25	156	662
RTOR Reduction (vph)	0	0	225	0	11	0	0	7	0	0	41	286
Lane Group Flow (vph)	598	63	76	11	27	0	202	403	0	0	392	124
Confl. Peds. (#/hr)						5			12			
Confl. Bikes (#/hr)			2			1		5	1	1	1	1
Turn Type	Prot	NA	Perm	Prot	NA		Split	NA		Split	NA	Perm
Protected Phases	7	4		3	8		2	2		6	6	
Permitted Phases			4									6
Actuated Green, G (s)	15.4	21.2	21.2	0.7	7.0		15.0	15.0			25.2	25.2
Effective Green, g (s)	15.4	21.2	21.2	0.7	7.0		15.0	15.0			25.2	25.2
Actuated g/C Ratio	0.18	0.25	0.25	0.01	0.08		0.18	0.18			0.30	0.30
Clearance Time (s)	5.0	5.5	5.5	5.0	5.0		5.5	5.5			5.5	5.5
Vehicle Extension (s)	2.0	2.0	2.0	2.0	2.0		2.0	2.0			2.0	2.0
Lane Grp Cap (vph)	632	472	392	14	147		288	584			481	447
v/s Ratio Prot	c0.17	0.03		0.01	0.02		c0.13	0.12			c0.25	
v/s Ratio Perm			c0.05									0.08
v/c Ratio	0.95	0.13	0.19	0.79	0.18		0.70	0.69			0.81	0.28
Uniform Delay, d1	33.7	24.1	24.5	41.4	35.6		32.2	32.1			27.0	22.3
Progression Factor	1.00	1.00	1.00	1.00	1.00		1.00	1.00			1.00	1.00
Incremental Delay, d2	22.9	0.0	0.1	123.8	0.2		6.2	2.8			9.7	0.1
Delay (s)	56.6	24.2	24.6	165.2	35.9		38.4	35.0			36.7	22.4
Level of Service	E	C	C	F	D		D	C			D	C
Approach Delay (s)		44.5			64.9			36.1			29.7	
Approach LOS		D			E			D			C	

Intersection Summary			
HCM 2000 Control Delay	37.8	HCM 2000 Level of Service	D
HCM 2000 Volume to Capacity ratio	0.76		
Actuated Cycle Length (s)	83.6	Sum of lost time (s)	21.5
Intersection Capacity Utilization	69.8%	ICU Level of Service	C
Analysis Period (min)	15		

c Critical Lane Group

Movement	EBL	EBT	EBR	WBL	WBT	WBR	NBL	NBT	NBR	SBL	SBT	SBR
Lane Configurations												
Volume (vph)	21	5	25	63	4	13	13	647	17	4	368	39
Ideal Flow (vphpl)	1900	1900	1900	1900	1900	1900	1900	1900	1900	1900	1900	1900
Total Lost time (s)		4.9			4.9		4.4	4.9		4.4	4.9	
Lane Util. Factor		1.00			1.00		1.00	1.00		1.00	1.00	
Frpb, ped/bikes		0.99			1.00		1.00	1.00		1.00	1.00	
Flpb, ped/bikes		1.00			1.00		1.00	1.00		1.00	1.00	
Frt		0.93			0.98		1.00	1.00		1.00	0.99	
Flt Protected		0.98			0.96		0.95	1.00		0.95	1.00	
Satd. Flow (prot)		1676			1737		1765	1854		1767	1831	
Flt Permitted		0.86			0.73		0.95	1.00		0.95	1.00	
Satd. Flow (perm)		1464			1324		1765	1854		1767	1831	
Peak-hour factor, PHF	0.91	0.91	0.91	0.91	0.91	0.91	0.91	0.91	0.91	0.91	0.91	0.91
Adj. Flow (vph)	23	5	27	69	4	14	14	711	19	4	404	43
RTOR Reduction (vph)	0	24	0	0	12	0	0	1	0	0	4	0
Lane Group Flow (vph)	0	31	0	0	75	0	14	729	0	4	443	0
Confl. Peds. (#/hr)	7		4	4		7	3		2	2		3
Confl. Bikes (#/hr)	1	4			2							
Turn Type	Perm	NA		Perm	NA		Prot	NA		Prot	NA	
Protected Phases		4			8		5	2		1	6	
Permitted Phases	4			8								
Actuated Green, G (s)		7.1			7.1		0.8	32.9		0.8	32.9	
Effective Green, g (s)		7.1			7.1		0.8	32.9		0.8	32.9	
Actuated g/C Ratio		0.13			0.13		0.01	0.60		0.01	0.60	
Clearance Time (s)		4.9			4.9		4.4	4.9		4.4	4.9	
Vehicle Extension (s)		2.0			2.0		2.0	2.0		2.0	2.0	
Lane Grp Cap (vph)		188			170		25	1109		25	1095	
v/s Ratio Prot							c0.01	c0.39		0.00	0.24	
v/s Ratio Perm		0.02			c0.06							
v/c Ratio		0.17			0.44		0.56	0.66		0.16	0.40	
Uniform Delay, d1		21.3			22.1		26.9	7.3		26.8	5.9	
Progression Factor		1.00			1.00		0.64	2.29		1.00	1.00	
Incremental Delay, d2		0.2			0.7		13.3	2.5		1.1	1.1	
Delay (s)		21.5			22.8		30.4	19.3		27.9	7.0	
Level of Service		C			C		C	B		C	A	
Approach Delay (s)		21.5			22.8			19.5			7.2	
Approach LOS		C			C			B			A	

Intersection Summary			
HCM 2000 Control Delay	15.6	HCM 2000 Level of Service	B
HCM 2000 Volume to Capacity ratio	0.62		
Actuated Cycle Length (s)	55.0	Sum of lost time (s)	14.2
Intersection Capacity Utilization	52.9%	ICU Level of Service	A
Analysis Period (min)	15		
c Critical Lane Group			

Movement	NBL	NBT	SBT	SBR	SEL	SER
Lane Configurations						
Volume (vph)	582	697	458	4	0	355
Ideal Flow (vphpl)	1900	1900	1900	1900	1900	1900
Total Lost time (s)	5.0	5.0	5.0			5.0
Lane Util. Factor	0.91	0.91	0.95			0.88
Frpb, ped/bikes	1.00	1.00	1.00			1.00
Flpb, ped/bikes	1.00	1.00	1.00			1.00
Frt	1.00	1.00	1.00			0.85
Flt Protected	0.95	0.99	1.00			1.00
Satd. Flow (prot)	1610	3357	3535			2787
Flt Permitted	0.95	0.99	1.00			1.00
Satd. Flow (perm)	1610	3357	3535			2787
Peak-hour factor, PHF	0.89	0.89	0.89	0.89	0.89	0.89
Growth Factor (vph)	110%	110%	121%	121%	121%	122%
Adj. Flow (vph)	719	861	623	5	0	487
RTOR Reduction (vph)	0	0	1	0	0	88
Lane Group Flow (vph)	510	1070	627	0	0	399
Confl. Peds. (#/hr)				1		
Confl. Bikes (#/hr)		2	2			8
Turn Type	Split	NA	NA			Prot
Protected Phases	2	2	4			6
Permitted Phases						
Actuated Green, G (s)	30.5	30.5	14.5			30.5
Effective Green, g (s)	30.5	30.5	14.5			30.5
Actuated g/C Ratio	0.55	0.55	0.26			0.55
Clearance Time (s)	5.0	5.0	5.0			5.0
Vehicle Extension (s)	2.0	2.0	2.0			2.0
Lane Grp Cap (vph)	892	1861	931			1545
v/s Ratio Prot	0.32	c0.32	c0.18			0.14
v/s Ratio Perm						
v/c Ratio	0.57	0.57	0.67			0.26
Uniform Delay, d1	8.0	8.0	18.1			6.4
Progression Factor	1.05	0.95	0.93			1.00
Incremental Delay, d2	2.5	1.2	1.5			0.0
Delay (s)	10.8	8.8	18.4			6.4
Level of Service	B	A	B			A
Approach Delay (s)		9.5	18.4		6.4	
Approach LOS		A	B		A	

Intersection Summary			
HCM 2000 Control Delay	11.0	HCM 2000 Level of Service	B
HCM 2000 Volume to Capacity ratio	0.61		
Actuated Cycle Length (s)	55.0	Sum of lost time (s)	10.0
Intersection Capacity Utilization	50.3%	ICU Level of Service	A
Analysis Period (min)	15		

c Critical Lane Group

Movement	EBL	EBT	EBR	WBL	WBT	WBR	NBL	NBT	NBR	SBL	SBT	SBR
Lane Configurations												
Volume (vph)	3	1	2	3	4	5	14	458	8	10	362	5
Ideal Flow (vphpl)	1900	1900	1900	1900	1900	1900	1900	1900	1900	1900	1900	1900
Total Lost time (s)		5.5			5.5		5.5	5.5		5.5	5.5	
Lane Util. Factor		1.00			1.00		1.00	0.95		1.00	0.91	
Frpb, ped/bikes		1.00			1.00		1.00	1.00		1.00	1.00	
Flpb, ped/bikes		1.00			1.00		1.00	1.00		1.00	1.00	
Frt		0.98			0.94		1.00	1.00		1.00	1.00	
Flt Protected		0.97			0.99		0.95	1.00		0.95	1.00	
Satd. Flow (prot)		1761			1738		1770	3528		1770	5077	
Flt Permitted		1.00			1.00		0.95	1.00		0.95	1.00	
Satd. Flow (perm)		1817			1760		1770	3528		1770	5077	
Peak-hour factor, PHF	0.92	0.92	0.92	0.92	0.92	0.92	0.92	0.92	0.92	0.92	0.92	0.92
Growth Factor (vph)	200%	200%	100%	200%	200%	200%	160%	130%	160%	160%	130%	100%
Adj. Flow (vph)	7	2	2	7	9	11	24	647	14	17	512	5
RTOR Reduction (vph)	0	2	0	0	11	0	0	1	0	0	0	0
Lane Group Flow (vph)	0	9	0	0	16	0	24	660	0	17	517	0
Confl. Bikes (#/hr)								7			8	3
Turn Type	Perm	NA		Perm	NA		Prot	NA		Prot	NA	
Protected Phases		4			8		5	2		1	6	
Permitted Phases	4			8								
Actuated Green, G (s)		0.9			0.9		1.3	22.1		0.8	21.6	
Effective Green, g (s)		0.9			0.9		1.3	22.1		0.8	21.6	
Actuated g/C Ratio		0.02			0.02		0.03	0.55		0.02	0.54	
Clearance Time (s)		5.5			5.5		5.5	5.5		5.5	5.5	
Vehicle Extension (s)		2.0			2.0		2.0	2.0		2.0	2.0	
Lane Grp Cap (vph)		40			39		57	1934		35	2721	
v/s Ratio Prot							0.01	c0.19		0.01	c0.10	
v/s Ratio Perm		0.00			c0.01							
v/c Ratio		0.23			0.42		0.42	0.34		0.49	0.19	
Uniform Delay, d1		19.4			19.4		19.1	5.1		19.5	4.8	
Progression Factor		1.00			1.00		1.00	1.00		1.00	1.00	
Incremental Delay, d2		1.0			2.6		1.8	0.0		3.8	0.0	
Delay (s)		20.4			22.1		21.0	5.1		23.4	4.8	
Level of Service		C			C		C	A		C	A	
Approach Delay (s)		20.4			22.1			5.7			5.4	
Approach LOS		C			C			A			A	

Intersection Summary			
HCM 2000 Control Delay	6.0	HCM 2000 Level of Service	A
HCM 2000 Volume to Capacity ratio	0.36		
Actuated Cycle Length (s)	40.3	Sum of lost time (s)	16.5
Intersection Capacity Utilization	31.1%	ICU Level of Service	A
Analysis Period (min)	15		
c Critical Lane Group			

Movement	EBL	EBT	EBR	WBL	WBT	WBR	NBL	NBT	NBR	SBL	SBT	SBR
Lane Configurations												
Volume (vph)	24	13	30	11	25	8	94	473	39	20	335	50
Ideal Flow (vphpl)	1900	1900	1900	1900	1900	1900	1900	1900	1900	1900	1900	1900
Lane Width	11	11	12	12	12	12	12	12	12	12	12	12
Total Lost time (s)	4.9	4.9	4.9	4.9	4.9		4.4	4.9		4.4	4.9	
Lane Util. Factor	1.00	1.00	1.00	1.00	1.00		1.00	0.95		1.00	0.91	
Frpb, ped/bikes	1.00	1.00	0.99	1.00	1.00		1.00	1.00		1.00	1.00	
Flpb, ped/bikes	1.00	1.00	1.00	1.00	1.00		1.00	1.00		1.00	1.00	
Frt	1.00	1.00	0.85	1.00	0.95		1.00	0.99		1.00	0.98	
Flt Protected	0.95	1.00	1.00	0.95	1.00		0.95	1.00		0.95	1.00	
Satd. Flow (prot)	1711	1801	1561	1766	1762		1770	3485		1770	4819	
Flt Permitted	0.71	1.00	1.00	0.74	1.00		0.95	1.00		0.95	1.00	
Satd. Flow (perm)	1275	1801	1561	1378	1762		1770	3485		1770	4819	
Peak-hour factor, PHF	0.88	0.88	0.88	0.88	0.88	0.88	0.88	0.88	0.88	0.88	0.88	0.88
Growth Factor (vph)	300%	170%	100%	170%	170%	300%	130%	110%	130%	200%	116%	100%
Adj. Flow (vph)	82	25	34	21	48	27	139	591	58	45	442	57
RTOR Reduction (vph)	0	0	29	0	23	0	0	4	0	0	11	0
Lane Group Flow (vph)	82	25	5	21	52	0	139	645	0	45	488	0
Confl. Peds. (#/hr)			3	3			1		1	1		1
Confl. Bikes (#/hr)								1			7	1
Parking (#/hr)											0	
Turn Type	Perm	NA	Perm	Perm	NA		Prot	NA		Prot	NA	
Protected Phases		4			8		5	2		1	6	
Permitted Phases	4		4	8								
Actuated Green, G (s)	10.9	10.9	10.9	10.9	10.9		10.0	47.1		4.3	41.4	
Effective Green, g (s)	10.9	10.9	10.9	10.9	10.9		10.0	47.1		4.3	41.4	
Actuated g/C Ratio	0.14	0.14	0.14	0.14	0.14		0.13	0.62		0.06	0.54	
Clearance Time (s)	4.9	4.9	4.9	4.9	4.9		4.4	4.9		4.4	4.9	
Vehicle Extension (s)	2.0	2.0	2.0	2.0	2.0		2.0	3.6		2.0	4.3	
Lane Grp Cap (vph)	181	256	222	196	251		231	2145		99	2607	
v/s Ratio Prot		0.01			0.03		c0.08	c0.19		0.03	0.10	
v/s Ratio Perm	c0.06		0.00	0.02								
v/c Ratio	0.45	0.10	0.02	0.11	0.21		0.60	0.30		0.45	0.19	
Uniform Delay, d1	30.1	28.5	28.2	28.6	29.0		31.4	6.9		35.0	9.0	
Progression Factor	1.00	1.00	1.00	1.00	1.00		1.00	1.00		1.00	1.00	
Incremental Delay, d2	0.7	0.1	0.0	0.1	0.1		3.0	0.4		1.2	0.2	
Delay (s)	30.7	28.6	28.2	28.7	29.1		34.4	7.3		36.2	9.1	
Level of Service	C	C	C	C	C		C	A		D	A	
Approach Delay (s)		29.7			29.0			12.1			11.4	
Approach LOS		C			C			B			B	

Intersection Summary			
HCM 2000 Control Delay	14.4	HCM 2000 Level of Service	B
HCM 2000 Volume to Capacity ratio	0.39		
Actuated Cycle Length (s)	76.5	Sum of lost time (s)	14.2
Intersection Capacity Utilization	49.4%	ICU Level of Service	A
Analysis Period (min)	15		

c Critical Lane Group

Movement	EBL	EBR	EBR2	NBL	NBT	NBR	SBL	SBT	SBR	NWL2	NWL	NWR
Lane Configurations												
Volume (vph)	24	11	42	130	678	10	429	350	45	4	14	557
Ideal Flow (vphpl)	1900	1900	1900	1900	1900	1900	1900	1900	1900	1900	1900	1900
Total Lost time (s)	4.9	4.9		4.4	5.3		4.4	5.3			4.9	4.4
Lane Util. Factor	1.00	1.00		1.00	0.95		0.97	0.95			1.00	0.95
Frpb, ped/bikes	1.00	1.00		1.00	1.00		1.00	0.99			1.00	1.00
Flpb, ped/bikes	1.00	1.00		1.00	1.00		1.00	1.00			1.00	1.00
Frt	1.00	0.85		1.00	1.00		1.00	0.97			0.86	0.85
Flt Protected	0.95	1.00		0.95	1.00		0.95	1.00			1.00	1.00
Satd. Flow (prot)	1770	1583		1770	3530		3433	3409			1593	1504
Flt Permitted	0.26	1.00		0.95	1.00		0.95	1.00			1.00	1.00
Satd. Flow (perm)	493	1583		1770	3530		3433	3409			1593	1504
Peak-hour factor, PHF	0.92	0.92	0.92	0.92	0.92	0.92	0.92	0.92	0.92	0.92	0.92	0.92
Growth Factor (vph)	200%	100%	200%	125%	110%	100%	115%	100%	200%	100%	100%	100%
Adj. Flow (vph)	52	12	91	177	811	11	536	380	98	4	15	605
RTOR Reduction (vph)	0	89	0	0	0	0	0	20	0	0	255	15
Lane Group Flow (vph)	52	14	0	177	822	0	536	458	0	0	60	294
Confl. Peds. (#/hr)			16	5		15			5	16		
Confl. Bikes (#/hr)					2	2	7	7			3	
Turn Type	Perm	Prot		Prot	NA		Prot	NA		Perm	Prot	pm+ov
Protected Phases		4		5	2		1	6			8	1
Permitted Phases	4									8		8
Actuated Green, G (s)	15.1	15.1		20.1	58.3		22.0	60.2			15.1	37.1
Effective Green, g (s)	15.1	15.1		20.1	58.3		22.0	60.2			15.1	37.1
Actuated g/C Ratio	0.14	0.14		0.18	0.53		0.20	0.55			0.14	0.34
Clearance Time (s)	4.9	4.9		4.4	5.3		4.4	5.3			4.9	4.4
Vehicle Extension (s)	2.0	2.0		2.0	2.0		2.0	2.0			2.0	2.0
Lane Grp Cap (vph)	67	217		323	1870		686	1865			218	507
v/s Ratio Prot		0.01		0.10	c0.23		c0.16	0.13				0.12
v/s Ratio Perm	c0.11										0.04	0.08
v/c Ratio	0.78	0.07		0.55	0.44		0.78	0.25			0.27	0.58
Uniform Delay, d1	45.8	41.3		40.8	15.8		41.7	13.0			42.5	30.0
Progression Factor	1.00	1.00		1.32	1.03		1.00	0.84			3.97	1.15
Incremental Delay, d2	39.0	0.0		0.8	0.0		5.0	0.3			0.2	0.7
Delay (s)	84.8	41.4		54.6	16.3		46.7	11.2			168.9	35.4
Level of Service	F	D		D	B		D	B			F	D
Approach Delay (s)	55.9				23.1			30.0			102.8	
Approach LOS	E				C			C			F	

Intersection Summary			
HCM 2000 Control Delay	45.2	HCM 2000 Level of Service	D
HCM 2000 Volume to Capacity ratio	0.57		
Actuated Cycle Length (s)	110.0	Sum of lost time (s)	14.6
Intersection Capacity Utilization	74.8%	ICU Level of Service	D
Analysis Period (min)	15		

c Critical Lane Group

Movement	WBL	WBR	NBT	NBR	SBL	SBT
Lane Configurations						
Volume (vph)	705	0	853	784	0	384
Ideal Flow (vphpl)	1900	1900	1900	1900	1900	1900
Total Lost time (s)	5.2		5.5	5.5		5.3
Lane Util. Factor	0.97		0.95	1.00		0.95
Frpb, ped/bikes	1.00		1.00	0.98		1.00
Flpb, ped/bikes	1.00		1.00	1.00		1.00
Frt	1.00		1.00	0.85		1.00
Flt Protected	0.95		1.00	1.00		1.00
Satd. Flow (prot)	3433		3539	1560		3539
Flt Permitted	0.95		1.00	1.00		1.00
Satd. Flow (perm)	3433		3539	1560		3539
Peak-hour factor, PHF	0.89	0.89	0.89	0.89	0.89	0.89
Growth Factor (vph)	115%	100%	100%	125%	100%	115%
Adj. Flow (vph)	911	0	958	1101	0	496
RTOR Reduction (vph)	0	0	0	607	0	0
Lane Group Flow (vph)	911	0	958	494	0	496
Confl. Bikes (#/hr)			2	6	8	
Turn Type	Prot		NA	Perm		NA
Protected Phases	8		2			6
Permitted Phases				2		
Actuated Green, G (s)	19.9		24.4	24.4		24.6
Effective Green, g (s)	19.9		24.4	24.4		24.6
Actuated g/C Ratio	0.36		0.44	0.44		0.45
Clearance Time (s)	5.2		5.5	5.5		5.3
Vehicle Extension (s)	3.6		3.9	3.9		4.7
Lane Grp Cap (vph)	1242		1570	692		1582
v/s Ratio Prot	c0.27		0.27			0.14
v/s Ratio Perm				c0.32		
v/c Ratio	0.73		0.61	0.71		0.31
Uniform Delay, d1	15.2		11.7	12.5		9.8
Progression Factor	1.08		1.00	1.00		1.03
Incremental Delay, d2	1.6		1.8	6.2		0.5
Delay (s)	18.0		13.4	18.7		10.6
Level of Service	B		B	B		B
Approach Delay (s)	18.0		16.2			10.6
Approach LOS	B		B			B

Intersection Summary			
HCM 2000 Control Delay	15.9	HCM 2000 Level of Service	B
HCM 2000 Volume to Capacity ratio	0.72		
Actuated Cycle Length (s)	55.0	Sum of lost time (s)	10.7
Intersection Capacity Utilization	65.3%	ICU Level of Service	C
Analysis Period (min)	15		
c Critical Lane Group			

Movement	EBL	EBT	EBR	WBL	WBT	WBR	SEL	SET	SER	NWL	NWT	NWR
Lane Configurations												
Volume (vph)	27	639	139	61	451	281	322	140	26	232	272	150
Ideal Flow (vphpl)	1900	1900	1900	1900	1900	1900	1900	1900	1900	1900	1900	1900
Total Lost time (s)	4.4	4.9		4.4	4.9		4.9	4.9		4.9	4.9	4.9
Lane Util. Factor	1.00	0.95		1.00	0.95		0.95	0.95		0.95	0.95	1.00
Frpb, ped/bikes	1.00	0.99		1.00	0.98		1.00	0.99		1.00	1.00	0.96
Flpb, ped/bikes	1.00	1.00		1.00	1.00		1.00	1.00		1.00	1.00	1.00
Frt	1.00	0.97		1.00	0.94		1.00	0.99		1.00	1.00	0.85
Flt Protected	0.95	1.00		0.95	1.00		0.95	0.99		0.95	0.99	1.00
Satd. Flow (prot)	1770	3390		1770	3255		1681	1723		1681	1759	1519
Flt Permitted	0.95	1.00		0.95	1.00		0.95	0.99		0.95	0.99	1.00
Satd. Flow (perm)	1770	3390		1770	3255		1681	1723		1681	1759	1519
Peak-hour factor, PHF	0.84	0.84	0.84	0.84	0.84	0.84	0.84	0.84	0.84	0.84	0.84	0.84
Growth Factor (vph)	125%	100%	125%	100%	100%	100%	88%	150%	88%	125%	88%	100%
Adj. Flow (vph)	40	761	207	73	537	335	337	250	27	345	285	179
RTOR Reduction (vph)	0	19	0	0	68	0	0	3	0	0	0	140
Lane Group Flow (vph)	40	949	0	73	804	0	303	308	0	307	323	39
Confl. Peds. (#/hr)			26			19			42			16
Bus Blockages (#/hr)	0	0	4	0	0	0	0	0	0	0	0	0
Turn Type	Prot	NA		Prot	NA		Split	NA		Split	NA	Perm
Protected Phases	5			1			4	4		3	3	
Permitted Phases		2			6							3
Actuated Green, G (s)	4.9	37.0		6.9	39.0		22.8	22.8		24.2	24.2	24.2
Effective Green, g (s)	4.9	37.0		6.9	39.0		22.8	22.8		24.2	24.2	24.2
Actuated g/C Ratio	0.04	0.34		0.06	0.35		0.21	0.21		0.22	0.22	0.22
Clearance Time (s)	4.4	4.9		4.4	4.9		4.9	4.9		4.9	4.9	4.9
Vehicle Extension (s)	2.0	2.0		2.0	2.0		2.0	2.0		2.0	2.0	2.0
Lane Grp Cap (vph)	78	1140		111	1154		348	357		369	386	334
v/s Ratio Prot	0.02			c0.04			c0.18	0.18		0.18	c0.18	
v/s Ratio Perm		c0.28			0.25							0.03
v/c Ratio	0.51	0.83		0.66	0.70		0.87	0.86		0.83	0.84	0.12
Uniform Delay, d1	51.4	33.6		50.4	30.4		42.2	42.1		41.0	41.0	34.4
Progression Factor	0.98	1.01		0.73	1.31		1.57	1.58		1.15	1.15	2.31
Incremental Delay, d2	1.2	2.6		8.9	1.3		23.2	21.8		13.3	13.1	0.1
Delay (s)	51.6	36.7		45.5	41.0		89.3	88.2		60.5	60.5	79.5
Level of Service	D	D		D	D		F	F		E	E	E
Approach Delay (s)		37.3			41.4			88.8			64.7	
Approach LOS		D			D			F			E	

Intersection Summary			
HCM 2000 Control Delay	54.4	HCM 2000 Level of Service	D
HCM 2000 Volume to Capacity ratio	0.83		
Actuated Cycle Length (s)	110.0	Sum of lost time (s)	19.1
Intersection Capacity Utilization	71.9%	ICU Level of Service	C
Analysis Period (min)	15		

c Critical Lane Group

Movement	EBL	EBT	EBR	WBL	WBT	WBR	NBL	NBT	NBR	SBL	SBT	SBR
Lane Configurations												
Volume (vph)	439	646	30	4	668	45	95	16	3	10	0	44
Ideal Flow (vphpl)	1900	1900	1900	1900	1900	1900	1900	1900	1900	1900	1900	1900
Total Lost time (s)	4.4	4.9		4.4	5.6			4.9			4.9	4.4
Lane Util. Factor	1.00	0.95		1.00	0.95			1.00			1.00	1.00
Frpb, ped/bikes	1.00	1.00		1.00	1.00			1.00			1.00	0.99
Flpb, ped/bikes	1.00	1.00		1.00	1.00			0.99			1.00	1.00
Frt	1.00	0.99		1.00	0.99			1.00			1.00	0.85
Flt Protected	0.95	1.00		0.95	1.00			0.96			0.95	1.00
Satd. Flow (prot)	1770	3511		1770	3503			1766			1765	1574
Flt Permitted	0.95	1.00		0.95	1.00			0.75			0.75	1.00
Satd. Flow (perm)	1770	3511		1770	3503			1385			1395	1574
Peak-hour factor, PHF	0.84	0.84	0.84	0.84	0.84	0.84	0.84	0.84	0.84	0.84	0.84	0.84
Growth Factor (vph)	96%	96%	96%	96%	96%	96%	96%	96%	96%	96%	96%	96%
Adj. Flow (vph)	502	738	34	5	763	51	109	18	3	11	0	50
RTOR Reduction (vph)	0	3	0	0	4	0	0	1	0	0	0	19
Lane Group Flow (vph)	502	769	0	5	810	0	0	129	0	0	11	31
Confl. Peds. (#/hr)	2		4	4		2	8		3	3		8
Confl. Bikes (#/hr)		9	1		6		1	21	1			
Turn Type	Prot	NA		Prot	NA		Perm	NA		Perm	NA	pm+ov
Protected Phases	7	4		3	8			2			6	7
Permitted Phases							2			6		6
Actuated Green, G (s)	43.5	35.1		45.3	36.2			15.4			15.4	58.9
Effective Green, g (s)	43.5	35.1		45.3	36.2			15.4			15.4	58.9
Actuated g/C Ratio	0.40	0.32		0.41	0.33			0.14			0.14	0.54
Clearance Time (s)	4.4	4.9		4.4	5.6			4.9			4.9	4.4
Vehicle Extension (s)	2.0	2.0		2.0	2.0			2.0			2.0	2.0
Lane Grp Cap (vph)	699	1120		728	1152			193			195	842
v/s Ratio Prot	c0.28	0.22		0.00	c0.23							0.01
v/s Ratio Perm								c0.09			0.01	0.01
v/c Ratio	0.72	0.69		0.01	0.70			0.67			0.06	0.04
Uniform Delay, d1	28.1	32.7		19.1	32.2			44.9			41.0	12.1
Progression Factor	1.45	0.66		1.00	1.00			1.00			1.00	1.00
Incremental Delay, d2	2.3	1.1		0.0	3.6			6.6			0.0	0.0
Delay (s)	43.1	22.6		19.1	35.8			51.5			41.0	12.1
Level of Service	D	C		B	D			D			D	B
Approach Delay (s)		30.6			35.7			51.5			17.3	
Approach LOS		C			D			D			B	

Intersection Summary			
HCM 2000 Control Delay	33.3	HCM 2000 Level of Service	C
HCM 2000 Volume to Capacity ratio	0.70		
Actuated Cycle Length (s)	110.0	Sum of lost time (s)	14.9
Intersection Capacity Utilization	68.4%	ICU Level of Service	C
Analysis Period (min)	15		

c Critical Lane Group

Movement	EBL	EBT	EBR	WBL	WBT	WBR	SEL	SET	SER	NWL	NWT	NWR
Lane Configurations												
Volume (vph)	99	12	28	3	6	16	53	227	69	54	555	43
Ideal Flow (vphpl)	1900	1900	1900	1900	1900	1900	1900	1900	1900	1900	1900	1900
Total Lost time (s)		5.0			5.0		5.0	5.0		5.0	5.0	
Lane Util. Factor		1.00			1.00		1.00	0.95		1.00	0.95	
Frpb, ped/bikes		1.00			0.99		1.00	0.99		1.00	1.00	
Flpb, ped/bikes		1.00			1.00		1.00	1.00		1.00	1.00	
Frt		0.97			0.91		1.00	0.97		1.00	0.99	
Flt Protected		0.97			0.99		0.95	1.00		0.95	1.00	
Satd. Flow (prot)		1734			1671		1770	3387		1770	3492	
Flt Permitted		0.77			0.95		0.95	1.00		0.95	1.00	
Satd. Flow (perm)		1383			1601		1770	3387		1770	3492	
Peak-hour factor, PHF	0.85	0.85	0.85	0.85	0.85	0.85	0.85	0.85	0.85	0.85	0.85	0.85
Adj. Flow (vph)	116	14	33	4	7	19	62	267	81	64	653	51
RTOR Reduction (vph)	0	23	0	0	15	0	0	39	0	0	9	0
Lane Group Flow (vph)	0	140	0	0	15	0	62	309	0	64	695	0
Confl. Peds. (#/hr)	10		10	10		10	10		10	10		10
Turn Type	Perm	NA		Perm	NA		Prot	NA		Prot	NA	
Protected Phases		4			8		1			5	2	
Permitted Phases	4			8				6				
Actuated Green, G (s)		10.4			10.4		6.2	24.8		4.8	23.4	
Effective Green, g (s)		10.4			10.4		6.2	24.8		4.8	23.4	
Actuated g/C Ratio		0.19			0.19		0.11	0.45		0.09	0.43	
Clearance Time (s)		5.0			5.0		5.0	5.0		5.0	5.0	
Vehicle Extension (s)		2.0			2.0		2.0	2.0		2.0	2.0	
Lane Grp Cap (vph)		261			302		199	1527		154	1485	
v/s Ratio Prot							0.04			c0.04	c0.20	
v/s Ratio Perm		c0.10			0.01			0.09				
v/c Ratio		0.54			0.05		0.31	0.20		0.42	0.47	
Uniform Delay, d1		20.1			18.3		22.4	9.1		23.8	11.3	
Progression Factor		1.00			1.00		0.99	1.31		1.00	1.00	
Incremental Delay, d2		1.1			0.0		0.2	0.2		0.7	1.1	
Delay (s)		21.2			18.3		22.4	12.2		24.4	12.4	
Level of Service		C			B		C	B		C	B	
Approach Delay (s)		21.2			18.3			13.7			13.4	
Approach LOS		C			B			B			B	

Intersection Summary			
HCM 2000 Control Delay	14.5	HCM 2000 Level of Service	B
HCM 2000 Volume to Capacity ratio	0.46		
Actuated Cycle Length (s)	55.0	Sum of lost time (s)	15.0
Intersection Capacity Utilization	48.6%	ICU Level of Service	A
Analysis Period (min)	15		

c Critical Lane Group

Movement	EBL	EBT	WBT	WBR	SBL	SBR
Lane Configurations						
Volume (vph)	285	340	285	347	192	35
Ideal Flow (vphpl)	1900	1900	1900	1900	1900	1900
Total Lost time (s)	4.4	6.0	5.6	5.6	4.9	4.9
Lane Util. Factor	1.00	0.95	0.95	1.00	0.97	0.91
Frpb, ped/bikes	1.00	1.00	1.00	0.95	1.00	0.99
Flpb, ped/bikes	1.00	1.00	1.00	1.00	0.98	1.00
Frt	1.00	1.00	1.00	0.85	1.00	0.85
Flt Protected	0.95	1.00	1.00	1.00	0.95	1.00
Satd. Flow (prot)	1593	3185	3185	1350	3042	1277
Flt Permitted	0.95	1.00	1.00	1.00	0.95	1.00
Satd. Flow (perm)	1593	3185	3185	1350	3042	1277
Peak-hour factor, PHF	0.78	0.78	0.92	0.92	0.78	0.78
Growth Factor (vph)	100%	150%	200%	115%	166%	100%
Adj. Flow (vph)	365	654	620	434	409	45
RTOR Reduction (vph)	0	0	0	302	1	31
Lane Group Flow (vph)	365	654	620	132	413	9
Confl. Peds. (#/hr)				23	10	
Confl. Bikes (#/hr)	5		3		2	3
Turn Type	Prot	NA	NA	Perm	Perm	Perm
Protected Phases	7	4	8			
Permitted Phases				8	6	6
Actuated Green, G (s)	21.7	49.7	24.0	24.0	18.4	18.4
Effective Green, g (s)	21.7	49.7	24.0	24.0	18.4	18.4
Actuated g/C Ratio	0.27	0.63	0.30	0.30	0.23	0.23
Clearance Time (s)	4.4	6.0	5.6	5.6	4.9	4.9
Vehicle Extension (s)	2.0	4.6	4.2	4.2	5.0	5.0
Lane Grp Cap (vph)	437	2003	967	410	708	297
v/s Ratio Prot	c0.23	0.21	c0.19			
v/s Ratio Perm				0.10	c0.14	0.01
v/c Ratio	0.84	0.33	0.64	0.32	0.58	0.03
Uniform Delay, d1	27.0	6.8	23.8	21.2	26.9	23.4
Progression Factor	1.00	1.00	1.00	1.00	1.00	1.00
Incremental Delay, d2	12.4	0.2	1.7	0.7	1.9	0.1
Delay (s)	39.4	7.0	25.5	21.9	28.8	23.5
Level of Service	D	A	C	C	C	C
Approach Delay (s)		18.6	24.0		28.3	
Approach LOS		B	C		C	

Intersection Summary			
HCM 2000 Control Delay	22.6	HCM 2000 Level of Service	C
HCM 2000 Volume to Capacity ratio	0.69		
Actuated Cycle Length (s)	79.0	Sum of lost time (s)	14.9
Intersection Capacity Utilization	60.6%	ICU Level of Service	B
Analysis Period (min)	15		

c Critical Lane Group

Movement	EBL	EBT	EBR	WBL	WBT	WBR	NBL	NBT	NBR	SBL	SBT	SBR
Lane Configurations												
Volume (vph)	45	405	5	8	694	52	40	3	48	60	4	34
Ideal Flow (vphpl)	1900	1900	1900	1900	1900	1900	1900	1900	1900	1900	1900	1900
Total Lost time (s)	4.4	5.7		4.4	6.0			4.9	4.9		4.9	4.9
Lane Util. Factor	1.00	0.95		1.00	0.95			1.00	1.00		1.00	1.00
Frpb, ped/bikes	1.00	1.00		1.00	1.00			1.00	1.00		1.00	0.98
Flpb, ped/bikes	1.00	1.00		1.00	1.00			1.00	1.00		1.00	1.00
Frt	1.00	1.00		1.00	0.98			1.00	0.85		1.00	0.85
Flt Protected	0.95	1.00		0.95	1.00			0.96	1.00		0.96	1.00
Satd. Flow (prot)	1770	3530		1770	3461			1771	1583		1779	1553
Flt Permitted	0.95	1.00		0.95	1.00			0.64	1.00		0.67	1.00
Satd. Flow (perm)	1770	3530		1770	3461			1181	1583		1242	1553
Peak-hour factor, PHF	0.85	0.85	0.85	0.85	0.92	0.85	0.85	0.85	0.85	0.85	0.85	0.85
Growth Factor (vph)	200%	180%	200%	200%	120%	200%	200%	200%	200%	200%	200%	200%
Adj. Flow (vph)	106	858	12	19	905	122	94	7	113	141	9	80
RTOR Reduction (vph)	0	0	0	0	8	0	0	0	91	0	0	64
Lane Group Flow (vph)	106	870	0	19	1019	0	0	101	22	0	150	16
Confl. Peds. (#/hr)	18		10	18		10	8					8
Confl. Bikes (#/hr)		7			5							1
Turn Type	Prot	NA		Prot	NA		Perm	NA	Perm	Perm	NA	Perm
Protected Phases	7	4		3	8			2			6	
Permitted Phases							2		2	6		6
Actuated Green, G (s)	6.7	33.5		1.1	27.6			12.2	12.2		12.2	12.2
Effective Green, g (s)	6.7	33.5		1.1	27.6			12.2	12.2		12.2	12.2
Actuated g/C Ratio	0.11	0.54		0.02	0.45			0.20	0.20		0.20	0.20
Clearance Time (s)	4.4	5.7		4.4	6.0			4.9	4.9		4.9	4.9
Vehicle Extension (s)	2.0	6.1		2.0	6.4			2.0	2.0		2.0	2.0
Lane Grp Cap (vph)	191	1913		31	1545			233	312		245	306
v/s Ratio Prot	c0.06	0.25		0.01	c0.29							
v/s Ratio Perm								0.09	0.01		c0.12	0.01
v/c Ratio	0.55	0.45		0.61	0.66			0.43	0.07		0.61	0.05
Uniform Delay, d1	26.1	8.6		30.1	13.4			21.8	20.2		22.6	20.1
Progression Factor	1.00	1.00		1.00	1.00			1.00	1.00		1.00	1.00
Incremental Delay, d2	2.0	0.5		22.6	1.8			0.5	0.0		3.2	0.0
Delay (s)	28.1	9.1		52.8	15.2			22.2	20.2		25.8	20.1
Level of Service	C	A		D	B			C	C		C	C
Approach Delay (s)		11.2			15.9			21.2			23.8	
Approach LOS		B			B			C			C	

Intersection Summary			
HCM 2000 Control Delay	15.2	HCM 2000 Level of Service	B
HCM 2000 Volume to Capacity ratio	0.63		
Actuated Cycle Length (s)	61.8	Sum of lost time (s)	15.3
Intersection Capacity Utilization	59.2%	ICU Level of Service	B
Analysis Period (min)	15		

c Critical Lane Group

Movement	WBL	WBR	NBT	NBR	SBL	SBT
Lane Configurations						
Volume (veh/h)	12	15	707	34	19	403
Sign Control	Stop		Free			Free
Grade	0%		0%			0%
Peak Hour Factor	0.92	0.92	0.92	0.92	0.92	0.92
Hourly flow rate (vph)	13	16	845	41	23	482
Pedestrians			6			6
Lane Width (ft)			12.0			12.0
Walking Speed (ft/s)			4.0			4.0
Percent Blockage			1			1
Right turn flare (veh)						
Median type			None			None
Median storage veh)						
Upstream signal (ft)			1175			441
pX, platoon unblocked	0.90	0.90			0.90	
vC, conflicting volume	1158	449			886	
vC1, stage 1 conf vol						
vC2, stage 2 conf vol						
vCu, unblocked vol	954	166			652	
tC, single (s)	6.8	6.9			4.1	
tC, 2 stage (s)						
tF (s)	3.5	3.3			2.2	
p0 queue free %	94	98			97	
cM capacity (veh/h)	224	760			838	

Direction, Lane #	WB 1	NB 1	NB 2	SB 1	SB 2	SB 3
Volume Total	29	564	322	23	241	241
Volume Left	13	0	0	23	0	0
Volume Right	16	0	41	0	0	0
cSH	368	1700	1700	838	1700	1700
Volume to Capacity	0.08	0.33	0.19	0.03	0.14	0.14
Queue Length 95th (ft)	6	0	0	2	0	0
Control Delay (s)	15.6	0.0	0.0	9.4	0.0	0.0
Lane LOS	C			A		
Approach Delay (s)	15.6	0.0		0.4		
Approach LOS	C					

Intersection Summary			
Average Delay	0.5		
Intersection Capacity Utilization	32.7%	ICU Level of Service	A
Analysis Period (min)	15		

Movement	EBL	EBT	EBR	WBL	WBT	WBR	NBL	NBT	NBR	SBL	SBT	SBR
Lane Configurations												
Sign Control		Stop			Stop			Stop			Stop	
Volume (vph)	181	17	6	3	23	70	0	168	3	12	118	106
Peak Hour Factor	0.89	0.89	0.89	0.89	0.89	0.89	0.89	0.89	0.89	0.89	0.89	0.89
Hourly flow rate (vph)	354	33	12	6	45	137	0	328	6	23	231	207

Direction, Lane #	EB 1	WB 1	NB 1	SB 1	SB 2
Volume Total (vph)	399	188	334	254	207
Volume Left (vph)	354	6	0	23	0
Volume Right (vph)	12	137	6	0	207
Hadj (s)	0.19	-0.40	0.02	0.08	-0.67
Departure Headway (s)	7.2	7.4	7.3	7.6	6.9
Degree Utilization, x	0.79	0.38	0.68	0.54	0.40
Capacity (veh/h)	481	427	464	437	492
Control Delay (s)	32.4	14.8	24.2	18.1	13.1
Approach Delay (s)	32.4	14.8	24.2	15.8	
Approach LOS	D	B	C	C	

Intersection Summary			
Delay	22.5		
Level of Service	C		
Intersection Capacity Utilization	67.7%	ICU Level of Service	C
Analysis Period (min)	15		

Movement	NBL	NBT	SBT	SBR	SEL	SER
Lane Configurations						
Volume (veh/h)	14	616	417	31	7	6
Sign Control		Free	Free		Stop	
Grade		0%	0%		0%	
Peak Hour Factor	0.87	0.87	0.87	0.87	0.87	0.87
Hourly flow rate (vph)	16	779	479	36	8	7
Pedestrians					2	
Lane Width (ft)					12.0	
Walking Speed (ft/s)					4.0	
Percent Blockage					0	
Right turn flare (veh)						
Median type		None	None			
Median storage veh)						
Upstream signal (ft)		748	779			
pX, platoon unblocked					0.78	
vC, conflicting volume	517				1310	499
vC1, stage 1 conf vol						
vC2, stage 2 conf vol						
vCu, unblocked vol	517				1257	499
tC, single (s)	4.1				6.4	6.2
tC, 2 stage (s)						
tF (s)	2.2				3.5	3.3
p0 queue free %	98				94	99
cM capacity (veh/h)	1047				145	570

Direction, Lane #	NB 1	NB 2	SB 1	SE 1
Volume Total	16	779	515	15
Volume Left	16	0	0	8
Volume Right	0	0	36	7
cSH	1047	1700	1700	221
Volume to Capacity	0.02	0.46	0.30	0.07
Queue Length 95th (ft)	1	0	0	5
Control Delay (s)	8.5	0.0	0.0	22.5
Lane LOS	A			C
Approach Delay (s)	0.2		0.0	22.5
Approach LOS				C

Intersection Summary			
Average Delay	0.4		
Intersection Capacity Utilization	45.7%	ICU Level of Service	A
Analysis Period (min)	15		

Movement	WBL	WBR	NBT	NBR	SBL	SBT
Lane Configurations						
Volume (vph)	28	58	384	41	123	540
Ideal Flow (vphpl)	1900	1900	1900	1900	1900	1900
Total Lost time (s)	5.0		5.0		5.5	5.0
Lane Util. Factor	1.00		0.95		1.00	0.95
Frpb, ped/bikes	0.99		1.00		1.00	1.00
Flpb, ped/bikes	1.00		1.00		1.00	1.00
Frt	0.91		0.98		1.00	1.00
Flt Protected	0.98		1.00		0.95	1.00
Satd. Flow (prot)	1642		3470		1770	3539
Flt Permitted	0.98		1.00		0.95	1.00
Satd. Flow (perm)	1642		3470		1770	3539
Peak-hour factor, PHF	0.92	0.92	0.92	0.92	0.92	0.92
Growth Factor (vph)	110%	110%	103%	110%	110%	103%
Adj. Flow (vph)	33	69	430	49	147	605
RTOR Reduction (vph)	62	0	5	0	0	0
Lane Group Flow (vph)	40	0	474	0	147	605
Confl. Peds. (#/hr)	10	10		10	10	
Turn Type	Prot		NA		Prot	NA
Protected Phases	8		2		1	6
Permitted Phases						
Actuated Green, G (s)	7.7		40.1		10.3	55.9
Effective Green, g (s)	7.7		40.1		10.3	55.9
Actuated g/C Ratio	0.10		0.54		0.14	0.76
Clearance Time (s)	5.0		5.0		5.5	5.0
Vehicle Extension (s)	2.0		2.0		2.0	2.0
Lane Grp Cap (vph)	171		1890		247	2687
v/s Ratio Prot	c0.02		c0.14		c0.08	0.17
v/s Ratio Perm						
v/c Ratio	0.24		0.25		0.60	0.23
Uniform Delay, d1	30.2		8.8		29.7	2.6
Progression Factor	1.00		1.00		1.00	1.00
Incremental Delay, d2	0.3		0.3		2.6	0.2
Delay (s)	30.5		9.1		32.3	2.8
Level of Service	C		A		C	A
Approach Delay (s)	30.5		9.1			8.5
Approach LOS	C		A			A

Intersection Summary			
HCM 2000 Control Delay	10.4	HCM 2000 Level of Service	B
HCM 2000 Volume to Capacity ratio	0.31		
Actuated Cycle Length (s)	73.6	Sum of lost time (s)	15.5
Intersection Capacity Utilization	45.0%	ICU Level of Service	A
Analysis Period (min)	15		
c Critical Lane Group			

Movement	EBL	EBT	EBR	WBL	WBT	WBR	NBL	NBT	NBR	SBL	SBT	SBR
Lane Configurations												
Volume (vph)	97	721	0	0	663	352	117	0	787	0	0	0
Ideal Flow (vphpl)	1900	1900	1900	1900	1900	1900	1900	1900	1900	1900	1900	1900
Total Lost time (s)	5.5	5.5			5.5	5.5	5.5		5.5			
Lane Util. Factor	1.00	0.95			0.95	1.00	1.00		1.00			
Frpb, ped/bikes	1.00	1.00			1.00	1.00	1.00		0.98			
Flpb, ped/bikes	1.00	1.00			1.00	1.00	1.00		1.00			
Frt	1.00	1.00			1.00	0.85	1.00		0.85			
Flt Protected	0.95	1.00			1.00	1.00	0.95		1.00			
Satd. Flow (prot)	1593	3185			3185	1425	1593		1397			
Flt Permitted	0.95	1.00			1.00	1.00	0.95		1.00			
Satd. Flow (perm)	1593	3185			3185	1425	1593		1397			
Peak-hour factor, PHF	0.96	0.96	0.96	0.96	0.96	0.96	0.96	0.96	0.96	0.96	0.96	0.96
Growth Factor (vph)	140%	140%	140%	140%	135%	140%	140%	140%	130%	140%	140%	140%
Adj. Flow (vph)	141	1051	0	0	932	513	171	0	1066	0	0	0
RTOR Reduction (vph)	0	0	0	0	0	305	0	0	0	0	0	0
Lane Group Flow (vph)	141	1051	0	0	932	208	171	0	1066	0	0	0
Confl. Peds. (#/hr)	10		10	10		10	10		10	10		10
Turn Type	Prot	NA			NA	Prot	Prot		custom			
Protected Phases	7	4			8	8	2		2			
Permitted Phases									4			
Actuated Green, G (s)	11.4	42.1			25.2	25.2	25.9		68.0			
Effective Green, g (s)	11.4	42.1			25.2	25.2	25.9		68.0			
Actuated g/C Ratio	0.14	0.53			0.32	0.32	0.33		0.86			
Clearance Time (s)	5.5	5.5			5.5	5.5	5.5		5.5			
Vehicle Extension (s)	2.0	2.0			2.0	2.0	2.0		2.0			
Lane Grp Cap (vph)	229	1697			1015	454	522		1397			
v/s Ratio Prot	0.09	0.33			0.29	0.15	0.11		c0.25			
v/s Ratio Perm									0.51			
v/c Ratio	0.62	0.62			0.92	0.46	0.33		0.76			
Uniform Delay, d1	31.7	12.9			25.9	21.5	20.0		2.2			
Progression Factor	1.00	1.00			1.00	1.00	1.00		1.00			
Incremental Delay, d2	3.4	0.5			12.5	0.3	0.1		2.3			
Delay (s)	35.2	13.3			38.4	21.7	20.1		4.5			
Level of Service	D	B			D	C	C		A			
Approach Delay (s)		15.9			32.5			6.7			0.0	
Approach LOS		B			C			A			A	

Intersection Summary			
HCM 2000 Control Delay	19.1	HCM 2000 Level of Service	B
HCM 2000 Volume to Capacity ratio	0.96		
Actuated Cycle Length (s)	79.0	Sum of lost time (s)	16.5
Intersection Capacity Utilization	111.6%	ICU Level of Service	H
Analysis Period (min)	15		
c Critical Lane Group			

Movement	WBL	WBR	NBT	NBR	SBL	SBT
Lane Configurations						
Volume (vph)	175	23	398	175	29	529
Ideal Flow (vphpl)	1900	1900	1900	1900	1900	1900
Total Lost time (s)	5.5		5.5	5.5	5.5	5.5
Lane Util. Factor	0.97		0.95	1.00	1.00	0.95
Frpb, ped/bikes	1.00		1.00	0.96	1.00	1.00
Flpb, ped/bikes	1.00		1.00	1.00	1.00	1.00
Frt	0.98		1.00	0.85	1.00	1.00
Flt Protected	0.96		1.00	1.00	0.95	1.00
Satd. Flow (prot)	3384		3539	1515	1770	3539
Flt Permitted	0.96		1.00	1.00	0.95	1.00
Satd. Flow (perm)	3384		3539	1515	1770	3539
Peak-hour factor, PHF	0.97	0.97	0.97	0.97	0.97	0.97
Growth Factor (vph)	174%	174%	106%	174%	174%	100%
Adj. Flow (vph)	314	41	435	314	52	545
RTOR Reduction (vph)	14	0	0	131	0	0
Lane Group Flow (vph)	341	0	435	183	52	545
Confl. Peds. (#/hr)	10	10		10	10	
Turn Type	Prot		NA	Perm	Prot	NA
Protected Phases	8		2		1	6
Permitted Phases				2		
Actuated Green, G (s)	12.3		46.7	46.7	4.6	56.8
Effective Green, g (s)	12.3		46.7	46.7	4.6	56.8
Actuated g/C Ratio	0.15		0.58	0.58	0.06	0.71
Clearance Time (s)	5.5		5.5	5.5	5.5	5.5
Vehicle Extension (s)	2.0		2.0	2.0	2.0	2.0
Lane Grp Cap (vph)	519		2063	883	101	2509
v/s Ratio Prot	c0.10		0.12		c0.03	c0.15
v/s Ratio Perm				0.12		
v/c Ratio	0.66		0.21	0.21	0.51	0.22
Uniform Delay, d1	31.9		7.9	7.9	36.7	4.0
Progression Factor	1.00		1.00	1.00	1.00	1.00
Incremental Delay, d2	2.3		0.2	0.5	1.8	0.2
Delay (s)	34.2		8.2	8.5	38.5	4.2
Level of Service	C		A	A	D	A
Approach Delay (s)	34.2		8.3			7.2
Approach LOS	C		A			A

Intersection Summary			
HCM 2000 Control Delay	13.3	HCM 2000 Level of Service	B
HCM 2000 Volume to Capacity ratio	0.33		
Actuated Cycle Length (s)	80.1	Sum of lost time (s)	16.5
Intersection Capacity Utilization	42.5%	ICU Level of Service	A
Analysis Period (min)	15		
c Critical Lane Group			

Movement	EBL	EBT	EBR	WBL	WBT	WBR	NBL	NBT	NBR	SBL	SBT	SBR
Lane Configurations												
Volume (vph)	186	984	282	117	643	47	209	14	152	83	14	144
Ideal Flow (vphpl)	1900	1900	1900	1900	1900	1900	1900	1900	1900	1900	1900	1900
Total Lost time (s)	5.0	5.0	5.0	5.0	5.0		5.0	5.0		5.0	5.0	
Lane Util. Factor	1.00	0.95	1.00	1.00	0.95		1.00	1.00		1.00	1.00	
Frpb, ped/bikes	1.00	1.00	0.95	1.00	1.00		1.00	0.98		1.00	0.98	
Flpb, ped/bikes	1.00	1.00	1.00	1.00	1.00		0.99	1.00		0.99	1.00	
Frt	1.00	1.00	0.85	1.00	0.99		1.00	0.86		1.00	0.86	
Flt Protected	0.95	1.00	1.00	0.95	1.00		0.95	1.00		0.95	1.00	
Satd. Flow (prot)	1593	3185	1358	1593	3143		1583	1419		1583	1420	
Flt Permitted	0.95	1.00	1.00	0.95	1.00		0.53	1.00		0.51	1.00	
Satd. Flow (perm)	1593	3185	1358	1593	3143		877	1419		849	1420	
Peak-hour factor, PHF	0.95	0.95	0.95	0.95	0.95	0.95	0.95	0.95	0.95	0.95	0.95	0.95
Growth Factor (vph)	140%	140%	140%	140%	140%	140%	140%	140%	140%	140%	140%	140%
Adj. Flow (vph)	274	1450	416	172	948	69	308	21	224	122	21	212
RTOR Reduction (vph)	0	0	171	0	5	0	0	150	0	0	142	0
Lane Group Flow (vph)	274	1450	245	172	1012	0	308	95	0	122	91	0
Confl. Peds. (#/hr)	10		10	10		10	10		10	10		10
Turn Type	Prot	NA	Perm	Prot	NA		Perm	NA		Perm	NA	
Protected Phases	7	4		3	8			2			6	
Permitted Phases			4				2			6		
Actuated Green, G (s)	15.0	35.0	35.0	13.2	33.2		31.0	31.0		31.0	31.0	
Effective Green, g (s)	15.0	35.0	35.0	13.2	33.2		31.0	31.0		31.0	31.0	
Actuated g/C Ratio	0.16	0.37	0.37	0.14	0.35		0.33	0.33		0.33	0.33	
Clearance Time (s)	5.0	5.0	5.0	5.0	5.0		5.0	5.0		5.0	5.0	
Vehicle Extension (s)	2.0	2.0	2.0	2.0	2.0		2.0	2.0		2.0	2.0	
Lane Grp Cap (vph)	253	1183	504	223	1107		288	466		279	467	
v/s Ratio Prot	c0.17	c0.46		0.11	0.32			0.07			0.06	
v/s Ratio Perm			0.18				c0.35			0.14		
v/c Ratio	1.08	1.23	0.49	0.77	0.91		1.07	0.20		0.44	0.19	
Uniform Delay, d1	39.6	29.6	22.7	39.0	29.1		31.6	22.7		24.8	22.6	
Progression Factor	1.00	1.00	1.00	1.00	1.00		1.00	1.00		1.00	1.00	
Incremental Delay, d2	80.5	109.2	0.3	13.9	11.2		72.7	0.1		0.4	0.1	
Delay (s)	120.1	138.8	23.0	53.0	40.4		104.3	22.8		25.2	22.7	
Level of Service	F	F	C	D	D		F	C		C	C	
Approach Delay (s)		113.9			42.2			68.2			23.6	
Approach LOS		F			D			E			C	

Intersection Summary			
HCM 2000 Control Delay	80.2	HCM 2000 Level of Service	F
HCM 2000 Volume to Capacity ratio	1.16		
Actuated Cycle Length (s)	94.2	Sum of lost time (s)	15.0
Intersection Capacity Utilization	105.8%	ICU Level of Service	G
Analysis Period (min)	15		
c Critical Lane Group			

Movement	WBL	WBR	NBT	NBR	SBL	SBT
Lane Configurations						
Volume (vph)	54	88	544	73	37	640
Ideal Flow (vphpl)	1900	1900	1900	1900	1900	1900
Total Lost time (s)	5.5		5.5		5.5	5.5
Lane Util. Factor	1.00		0.95		1.00	0.95
Frpb, ped/bikes	0.99		1.00		1.00	1.00
Flpb, ped/bikes	1.00		1.00		1.00	1.00
Frt	0.92		0.98		1.00	1.00
Flt Protected	0.98		1.00		0.95	1.00
Satd. Flow (prot)	1654		3460		1770	3539
Flt Permitted	0.98		1.00		0.95	1.00
Satd. Flow (perm)	1654		3460		1770	3539
Peak-hour factor, PHF	0.97	0.97	0.97	0.97	0.97	0.97
Growth Factor (vph)	117%	117%	113%	117%	117%	113%
Adj. Flow (vph)	65	106	634	88	45	746
RTOR Reduction (vph)	74	0	8	0	0	0
Lane Group Flow (vph)	97	0	714	0	45	746
Confl. Peds. (#/hr)	10	10		10	10	
Turn Type	Prot		NA		Prot	NA
Protected Phases	8		2		1	6
Permitted Phases						
Actuated Green, G (s)	8.2		20.2		2.3	28.0
Effective Green, g (s)	8.2		20.2		2.3	28.0
Actuated g/C Ratio	0.17		0.43		0.05	0.59
Clearance Time (s)	5.5		5.5		5.5	5.5
Vehicle Extension (s)	2.0		2.0		2.0	2.0
Lane Grp Cap (vph)	287		1480		86	2099
v/s Ratio Prot	c0.06		c0.21		0.03	c0.21
v/s Ratio Perm						
v/c Ratio	0.34		0.48		0.52	0.36
Uniform Delay, d1	17.1		9.7		21.9	4.9
Progression Factor	1.00		1.00		1.00	1.00
Incremental Delay, d2	0.3		0.1		2.6	0.0
Delay (s)	17.4		9.8		24.5	5.0
Level of Service	B		A		C	A
Approach Delay (s)	17.4		9.8			6.1
Approach LOS	B		A			A

Intersection Summary			
HCM 2000 Control Delay	8.8	HCM 2000 Level of Service	A
HCM 2000 Volume to Capacity ratio	0.47		
Actuated Cycle Length (s)	47.2	Sum of lost time (s)	16.5
Intersection Capacity Utilization	48.4%	ICU Level of Service	A
Analysis Period (min)	15		
c Critical Lane Group			

Movement	WBL	WBR	NBT	NBR	SBL	SBT
Lane Configurations						
Volume (vph)	51	29	576	81	36	670
Ideal Flow (vphpl)	1900	1900	1900	1900	1900	1900
Total Lost time (s)	5.5		5.5		5.5	5.5
Lane Util. Factor	1.00		0.95		1.00	0.95
Frpb, ped/bikes	0.99		1.00		1.00	1.00
Flpb, ped/bikes	1.00		1.00		1.00	1.00
Frt	0.96		0.98		1.00	1.00
Flt Protected	0.96		1.00		0.95	1.00
Satd. Flow (prot)	1722		3459		1770	3539
Flt Permitted	0.96		1.00		0.95	1.00
Satd. Flow (perm)	1722		3459		1770	3539
Peak-hour factor, PHF	0.97	0.97	0.97	0.97	0.97	0.97
Growth Factor (vph)	180%	117%	117%	117%	117%	112%
Adj. Flow (vph)	95	35	695	98	43	774
RTOR Reduction (vph)	17	0	9	0	0	0
Lane Group Flow (vph)	113	0	784	0	43	774
Confl. Peds. (#/hr)	10	10		10	10	
Turn Type	Prot		NA		Prot	NA
Protected Phases	8		2		1	6
Permitted Phases						
Actuated Green, G (s)	7.3		23.9		2.3	31.7
Effective Green, g (s)	7.3		23.9		2.3	31.7
Actuated g/C Ratio	0.15		0.48		0.05	0.63
Clearance Time (s)	5.5		5.5		5.5	5.5
Vehicle Extension (s)	2.0		2.0		2.0	2.0
Lane Grp Cap (vph)	251		1653		81	2243
v/s Ratio Prot	c0.07		c0.23		0.02	c0.22
v/s Ratio Perm						
v/c Ratio	0.45		0.47		0.53	0.35
Uniform Delay, d1	19.5		8.8		23.3	4.3
Progression Factor	1.00		1.00		1.00	1.00
Incremental Delay, d2	0.5		0.1		3.3	0.0
Delay (s)	20.0		8.9		26.6	4.3
Level of Service	B		A		C	A
Approach Delay (s)	20.0		8.9			5.5
Approach LOS	B		A			A

Intersection Summary			
HCM 2000 Control Delay	8.1	HCM 2000 Level of Service	A
HCM 2000 Volume to Capacity ratio	0.49		
Actuated Cycle Length (s)	50.0	Sum of lost time (s)	16.5
Intersection Capacity Utilization	48.2%	ICU Level of Service	A
Analysis Period (min)	15		
c Critical Lane Group			

Movement	NBT	NBR	SBL	SBT	NWL	NWR
Lane Configurations						
Volume (vph)	387	26	191	501	15	313
Ideal Flow (vphpl)	1900	1900	1900	1900	1900	1900
Total Lost time (s)	5.5		5.5	5.5	5.5	5.5
Lane Util. Factor	0.95		1.00	0.95	1.00	1.00
Frpb, ped/bikes	1.00		1.00	1.00	1.00	0.98
Flpb, ped/bikes	1.00		1.00	1.00	1.00	1.00
Frt	0.99		1.00	1.00	1.00	0.85
Flt Protected	1.00		0.95	1.00	0.95	1.00
Satd. Flow (prot)	3498		1770	3539	1770	1551
Flt Permitted	1.00		0.95	1.00	0.95	1.00
Satd. Flow (perm)	3498		1770	3539	1770	1551
Peak-hour factor, PHF	0.99	0.99	0.99	0.99	0.99	0.99
Growth Factor (vph)	124%	124%	115%	124%	124%	115%
Adj. Flow (vph)	485	33	222	628	19	364
RTOR Reduction (vph)	5	0	0	0	0	309
Lane Group Flow (vph)	513	0	222	628	19	55
Confl. Peds. (#/hr)		10	10		10	10
Turn Type	NA		Prot	NA	Prot	Perm
Protected Phases	2		1	6	8	
Permitted Phases						8
Actuated Green, G (s)	12.6		11.3	29.4	7.2	7.2
Effective Green, g (s)	12.6		11.3	29.4	7.2	7.2
Actuated g/C Ratio	0.26		0.24	0.62	0.15	0.15
Clearance Time (s)	5.5		5.5	5.5	5.5	5.5
Vehicle Extension (s)	2.0		2.0	2.0	2.0	2.0
Lane Grp Cap (vph)	925		420	2185	267	234
v/s Ratio Prot	c0.15		c0.13	0.18	0.01	
v/s Ratio Perm						c0.04
v/c Ratio	0.55		0.53	0.29	0.07	0.24
Uniform Delay, d1	15.1		15.8	4.2	17.3	17.8
Progression Factor	1.00		1.00	1.00	1.00	1.00
Incremental Delay, d2	0.4		0.6	0.0	0.0	0.2
Delay (s)	15.5		16.4	4.3	17.4	18.0
Level of Service	B		B	A	B	B
Approach Delay (s)	15.5			7.4	17.9	
Approach LOS	B			A	B	

Intersection Summary			
HCM 2000 Control Delay	12.1	HCM 2000 Level of Service	B
HCM 2000 Volume to Capacity ratio	0.47		
Actuated Cycle Length (s)	47.6	Sum of lost time (s)	16.5
Intersection Capacity Utilization	46.8%	ICU Level of Service	A
Analysis Period (min)	15		
c Critical Lane Group			

Movement	EBL	EBT	EBR	WBL	WBT	WBR	NBL	NBT	NBR	SBL	SBT	SBR
Lane Configurations												
Volume (vph)	7	6	33	206	1	24	23	391	284	11	293	7
Ideal Flow (vphpl)	1900	1900	1900	1900	1900	1900	1900	1900	1900	1900	1900	1900
Total Lost time (s)		5.0			5.0	5.0		5.0	5.0		5.0	
Lane Util. Factor		1.00			1.00	1.00		1.00	1.00		1.00	
Frpb, ped/bikes		0.98			1.00	0.96		1.00	0.96		1.00	
Flpb, ped/bikes		1.00			0.99	1.00		1.00	1.00		1.00	
Frt		0.90			1.00	0.85		1.00	0.85		1.00	
Flt Protected		0.99			0.95	1.00		1.00	1.00		1.00	
Satd. Flow (prot)		1636			1756	1522		1853	1521		1849	
Flt Permitted		0.95			0.68	1.00		0.96	1.00		0.98	
Satd. Flow (perm)		1564			1260	1522		1791	1521		1817	
Peak-hour factor, PHF	0.97	0.97	0.97	0.97	0.97	0.97	0.97	0.97	0.97	0.97	0.97	0.97
Growth Factor (vph)	115%	129%	129%	129%	200%	115%	129%	88%	129%	115%	88%	115%
Adj. Flow (vph)	8	8	44	274	2	28	31	355	378	13	266	8
RTOR Reduction (vph)	0	32	0	0	0	20	0	0	157	0	1	0
Lane Group Flow (vph)	0	28	0	0	276	8	0	386	221	0	286	0
Confl. Peds. (#/hr)	10		10	10		10	10		10	10		10
Turn Type	Perm	NA		Perm	NA	Perm	Perm	NA	Perm	Perm	NA	
Protected Phases		2			6			8			4	
Permitted Phases	2			6		6	8		8	4		
Actuated Green, G (s)		18.3			18.3	18.3		39.7	39.7		39.7	
Effective Green, g (s)		18.3			18.3	18.3		39.7	39.7		39.7	
Actuated g/C Ratio		0.27			0.27	0.27		0.58	0.58		0.58	
Clearance Time (s)		5.0			5.0	5.0		5.0	5.0		5.0	
Vehicle Extension (s)		2.0			2.0	2.0		2.0	2.0		2.0	
Lane Grp Cap (vph)		420			339	409		1045	887		1060	
v/s Ratio Prot												
v/s Ratio Perm		0.02			c0.22	0.00		c0.22	0.15		0.16	
v/c Ratio		0.07			0.81	0.02		0.37	0.25		0.27	
Uniform Delay, d1		18.5			23.3	18.3		7.5	6.9		7.0	
Progression Factor		1.00			1.00	1.00		1.00	1.00		1.00	
Incremental Delay, d2		0.0			13.2	0.0		1.0	0.7		0.6	
Delay (s)		18.5			36.5	18.3		8.5	7.6		7.6	
Level of Service		B			D	B		A	A		A	
Approach Delay (s)		18.5			34.8			8.0			7.6	
Approach LOS		B			C			A			A	

Intersection Summary			
HCM 2000 Control Delay	14.1	HCM 2000 Level of Service	B
HCM 2000 Volume to Capacity ratio	0.51		
Actuated Cycle Length (s)	68.0	Sum of lost time (s)	10.0
Intersection Capacity Utilization	58.8%	ICU Level of Service	B
Analysis Period (min)	15		
c Critical Lane Group			

Movement	EBL	EBT	EBR	WBL	WBT	WBR	NBL	NBT	NBR	SBL	SBT	SBR
Lane Configurations												
Volume (vph)	472	55	545	25	66	30	443	193	17	17	176	319
Ideal Flow (vphpl)	1900	1900	1900	1900	1900	1900	1900	1900	1900	1900	1900	1900
Total Lost time (s)	5.0	5.5	5.5	5.0	5.0		5.5	5.5			5.5	5.5
Lane Util. Factor	0.97	1.00	1.00	1.00	1.00		0.91	0.91			0.95	0.95
Frpb, ped/bikes	1.00	1.00	0.97	1.00	0.99		1.00	1.00			0.99	0.97
Flpb, ped/bikes	1.00	1.00	1.00	1.00	1.00		1.00	1.00			1.00	1.00
Frt	1.00	1.00	0.85	1.00	0.95		1.00	0.99			0.94	0.85
Flt Protected	0.95	1.00	1.00	0.95	1.00		0.95	0.97			1.00	1.00
Satd. Flow (prot)	3433	1863	1530	1770	1761		1610	3280			1639	1465
Flt Permitted	0.95	1.00	1.00	0.95	1.00		0.95	0.97			1.00	1.00
Satd. Flow (perm)	3433	1863	1530	1770	1761		1610	3280			1639	1465
Peak-hour factor, PHF	0.91	0.91	0.91	0.91	0.91	0.91	0.91	0.91	0.91	0.91	0.91	0.91
Growth Factor (vph)	115%	100%	84%	100%	100%	100%	84%	84%	84%	100%	84%	115%
Adj. Flow (vph)	596	60	503	27	73	33	409	178	16	19	162	403
RTOR Reduction (vph)	0	0	343	0	18	0	0	3	0	0	25	219
Lane Group Flow (vph)	596	60	160	27	88	0	204	396	0	0	281	59
Confl. Peds. (#/hr)	10		10	10		10	10		10	10		10
Turn Type	Prot	NA	Perm	Prot	NA		Split	NA		Split	NA	Perm
Protected Phases	7	4		3	8		2	2		6	6	
Permitted Phases			4									6
Actuated Green, G (s)	17.9	25.8	25.8	1.3	9.7		15.0	15.0			17.3	17.3
Effective Green, g (s)	17.9	25.8	25.8	1.3	9.7		15.0	15.0			17.3	17.3
Actuated g/C Ratio	0.22	0.32	0.32	0.02	0.12		0.19	0.19			0.21	0.21
Clearance Time (s)	5.0	5.5	5.5	5.0	5.0		5.5	5.5			5.5	5.5
Vehicle Extension (s)	2.0	2.0	2.0	2.0	2.0		2.0	2.0			2.0	2.0
Lane Grp Cap (vph)	759	594	487	28	211		298	608			350	313
v/s Ratio Prot	c0.17	0.03		0.02	c0.05		c0.13	0.12			c0.17	
v/s Ratio Perm			0.10									0.04
v/c Ratio	0.79	0.10	0.33	0.96	0.42		0.68	0.65			0.80	0.19
Uniform Delay, d1	29.7	19.4	21.0	39.8	33.0		30.7	30.5			30.2	26.1
Progression Factor	1.00	1.00	1.00	1.00	1.00		1.00	1.00			1.00	1.00
Incremental Delay, d2	4.9	0.0	0.1	153.1	0.5		5.1	1.9			11.8	0.1
Delay (s)	34.6	19.4	21.1	192.8	33.5		35.9	32.4			42.0	26.2
Level of Service	C	B	C	F	C		D	C			D	C
Approach Delay (s)		28.0			65.8			33.6			34.5	
Approach LOS		C			E			C			C	

Intersection Summary			
HCM 2000 Control Delay	32.9	HCM 2000 Level of Service	C
HCM 2000 Volume to Capacity ratio	0.71		
Actuated Cycle Length (s)	80.9	Sum of lost time (s)	21.5
Intersection Capacity Utilization	66.1%	ICU Level of Service	C
Analysis Period (min)	15		
c Critical Lane Group			

Movement	EBL	EBT	EBR	WBL	WBT	WBR	NBL	NBT	NBR	SBL	SBT	SBR
Lane Configurations												
Volume (vph)	57	4	30	57	6	21	26	521	32	11	596	43
Ideal Flow (vphpl)	1900	1900	1900	1900	1900	1900	1900	1900	1900	1900	1900	1900
Total Lost time (s)		4.9			4.9		4.4	4.9		4.4	4.9	
Lane Util. Factor		1.00			1.00		1.00	1.00		1.00	1.00	
Frpb, ped/bikes		0.99			0.99		1.00	1.00		1.00	1.00	
Flpb, ped/bikes		0.99			0.99		1.00	1.00		1.00	1.00	
Frt		0.96			0.98		1.00	0.99		1.00	0.99	
Flt Protected		0.97			0.96		0.95	1.00		0.95	1.00	
Satd. Flow (prot)		1689			1729		1770	1838		1770	1839	
Flt Permitted		0.79			0.72		0.95	1.00		0.95	1.00	
Satd. Flow (perm)		1377			1288		1770	1838		1770	1839	
Peak-hour factor, PHF	0.92	0.92	0.92	0.92	0.92	0.92	0.92	0.92	0.92	0.92	0.92	0.92
Growth Factor (vph)	150%	150%	150%	150%	150%	84%	110%	94%	110%	84%	84%	84%
Adj. Flow (vph)	93	7	49	93	10	19	31	532	38	10	544	39
RTOR Reduction (vph)	0	32	0	0	12	0	0	2	0	0	2	0
Lane Group Flow (vph)	0	117	0	0	110	0	31	568	0	10	581	0
Confl. Peds. (#/hr)	10		10	10		10	10		10	10		10
Turn Type	Perm	NA		Perm	NA		Prot	NA		Prot	NA	
Protected Phases		4			8		5	2		1	6	
Permitted Phases	4			8								
Actuated Green, G (s)		9.9			9.9		2.6	42.7		1.2	41.3	
Effective Green, g (s)		9.9			9.9		2.6	42.7		1.2	41.3	
Actuated g/C Ratio		0.15			0.15		0.04	0.63		0.02	0.61	
Clearance Time (s)		4.9			4.9		4.4	4.9		4.4	4.9	
Vehicle Extension (s)		2.0			2.0		2.0	2.0		2.0	2.0	
Lane Grp Cap (vph)		200			187		67	1154		31	1116	
v/s Ratio Prot							c0.02	0.31		0.01	c0.32	
v/s Ratio Perm		0.09			c0.09							
v/c Ratio		0.59			0.59		0.46	0.49		0.32	0.52	
Uniform Delay, d1		27.1			27.1		32.0	6.8		33.0	7.7	
Progression Factor		1.01			1.00		0.86	1.24		1.00	1.00	
Incremental Delay, d2		2.7			3.0		1.6	1.3		2.2	1.7	
Delay (s)		30.1			30.2		29.0	9.7		35.2	9.4	
Level of Service		C			C		C	A		D	A	
Approach Delay (s)		30.1			30.2			10.7			9.8	
Approach LOS		C			C			B			A	

Intersection Summary			
HCM 2000 Control Delay	13.9	HCM 2000 Level of Service	B
HCM 2000 Volume to Capacity ratio	0.53		
Actuated Cycle Length (s)	68.0	Sum of lost time (s)	14.2
Intersection Capacity Utilization	47.4%	ICU Level of Service	A
Analysis Period (min)	15		
c Critical Lane Group			

Movement	NBL	NBT	SBT	SBR	SEL	SER
Lane Configurations						
Volume (vph)	447	620	682	17	0	618
Ideal Flow (vphpl)	1900	1900	1900	1900	1900	1900
Total Lost time (s)	5.0	5.0	5.0			5.0
Lane Util. Factor	0.91	0.91	0.95			0.88
Frpb, ped/bikes	1.00	1.00	1.00			0.97
Flpb, ped/bikes	1.00	1.00	1.00			1.00
Frt	1.00	1.00	1.00			0.85
Flt Protected	0.95	0.99	1.00			1.00
Satd. Flow (prot)	1608	3345	3521			2707
Flt Permitted	1.00	0.95	1.00			1.00
Satd. Flow (perm)	1693	3236	3521			2707
Peak-hour factor, PHF	0.95	0.95	0.95	0.95	0.95	0.95
Growth Factor (vph)	111%	111%	102%	121%	121%	130%
Adj. Flow (vph)	522	724	732	22	0	846
RTOR Reduction (vph)	0	0	4	0	0	82
Lane Group Flow (vph)	261	985	750	0	0	764
Confl. Peds. (#/hr)	10			10	10	10
Turn Type	Perm	NA	NA			Perm
Protected Phases		2	4			
Permitted Phases	2					6
Actuated Green, G (s)	38.1	38.1	19.9			38.1
Effective Green, g (s)	38.1	38.1	19.9			38.1
Actuated g/C Ratio	0.56	0.56	0.29			0.56
Clearance Time (s)	5.0	5.0	5.0			5.0
Vehicle Extension (s)	2.0	2.0	2.0			2.0
Lane Grp Cap (vph)	948	1813	1030			1516
v/s Ratio Prot			c0.21			
v/s Ratio Perm	0.15	c0.30				0.28
v/c Ratio	0.28	0.54	0.73			0.50
Uniform Delay, d1	7.8	9.5	21.6			9.2
Progression Factor	0.84	0.85	1.00			1.55
Incremental Delay, d2	0.7	1.1	2.2			0.1
Delay (s)	7.2	9.1	23.8			14.3
Level of Service	A	A	C			B
Approach Delay (s)		8.7	23.8		14.3	
Approach LOS		A	C		B	

Intersection Summary			
HCM 2000 Control Delay	14.4	HCM 2000 Level of Service	B
HCM 2000 Volume to Capacity ratio	0.61		
Actuated Cycle Length (s)	68.0	Sum of lost time (s)	10.0
Intersection Capacity Utilization	60.0%	ICU Level of Service	B
Analysis Period (min)	15		
c Critical Lane Group			

Movement	EBL	EBT	EBR	WBL	WBT	WBR	NBL	NBT	NBR	SBL	SBT	SBR
Lane Configurations												
Volume (vph)	26	4	20	36	11	5	67	323	17	9	493	15
Ideal Flow (vphpl)	1900	1900	1900	1900	1900	1900	1900	1900	1900	1900	1900	1900
Total Lost time (s)		5.5			5.5		5.5	5.5		5.5	5.5	
Lane Util. Factor		1.00			1.00		1.00	0.95		1.00	0.95	
Frpb, ped/bikes		0.99			1.00		1.00	1.00		1.00	1.00	
Flpb, ped/bikes		1.00			0.99		1.00	1.00		0.99	1.00	
Frt		0.95			0.99		1.00	0.99		1.00	1.00	
Flt Protected		0.97			0.97		0.95	1.00		0.95	1.00	
Satd. Flow (prot)		1696			1765		1770	3496		1756	3520	
Flt Permitted		0.79			0.74		0.95	1.00		0.95	1.00	
Satd. Flow (perm)		1376			1352		1770	3496		1756	3520	
Peak-hour factor, PHF	0.95	0.95	0.95	0.95	0.95	0.95	0.95	0.95	0.95	0.95	0.95	0.95
Growth Factor (vph)	160%	160%	160%	160%	160%	160%	160%	120%	160%	120%	120%	120%
Adj. Flow (vph)	44	7	34	61	19	8	113	408	29	11	623	19
RTOR Reduction (vph)	0	29	0	0	4	0	0	4	0	0	2	0
Lane Group Flow (vph)	0	56	0	0	84	0	113	433	0	11	640	0
Confl. Peds. (#/hr)	10		10	10		10	10		10	10		10
Turn Type	Perm	NA		Perm	NA		Prot	NA		Prot	NA	
Protected Phases		4			8		5	2		1	6	
Permitted Phases	4			8								
Actuated Green, G (s)		7.0			7.0		6.4	27.4		0.8	21.8	
Effective Green, g (s)		7.0			7.0		6.4	27.4		0.8	21.8	
Actuated g/C Ratio		0.14			0.14		0.12	0.53		0.02	0.42	
Clearance Time (s)		5.5			5.5		5.5	5.5		5.5	5.5	
Vehicle Extension (s)		2.0			2.0		2.0	2.0		2.0	2.0	
Lane Grp Cap (vph)		186			183		219	1852		27	1484	
v/s Ratio Prot							c0.06	0.12		0.01	c0.18	
v/s Ratio Perm		0.04			c0.06							
v/c Ratio		0.30			0.46		0.52	0.23		0.41	0.43	
Uniform Delay, d1		20.1			20.6		21.2	6.5		25.2	10.6	
Progression Factor		1.00			1.00		1.00	1.00		1.00	1.00	
Incremental Delay, d2		0.3			0.7		0.9	0.0		3.6	0.1	
Delay (s)		20.5			21.3		22.1	6.5		28.8	10.6	
Level of Service		C			C		C	A		C	B	
Approach Delay (s)		20.5			21.3			9.7			10.9	
Approach LOS		C			C			A			B	

Intersection Summary			
HCM 2000 Control Delay	11.7	HCM 2000 Level of Service	B
HCM 2000 Volume to Capacity ratio	0.45		
Actuated Cycle Length (s)	51.7	Sum of lost time (s)	16.5
Intersection Capacity Utilization	45.4%	ICU Level of Service	A
Analysis Period (min)	15		
c Critical Lane Group			

Movement	EBL	EBT	EBR	WBL	WBT	WBR	NBL	NBT	NBR	SBL	SBT	SBR
Lane Configurations												
Volume (vph)	11	28	82	32	19	34	45	372	34	39	507	4
Ideal Flow (vphpl)	1900	1900	1900	1900	1900	1900	1900	1900	1900	1900	1900	1900
Total Lost time (s)		4.9			4.9		4.4	5.8		4.4	5.5	
Lane Util. Factor		1.00			1.00		1.00	0.95		1.00	0.95	
Frpb, ped/bikes		0.99			0.99		1.00	1.00		1.00	1.00	
Flpb, ped/bikes		1.00			1.00		1.00	1.00		1.00	1.00	
Frt		0.91			0.95		1.00	0.99		1.00	1.00	
Flt Protected		1.00			0.98		0.95	1.00		0.95	1.00	
Satd. Flow (prot)		1663			1707		1770	3483		1770	3532	
Flt Permitted		0.97			0.67		0.95	1.00		0.95	1.00	
Satd. Flow (perm)		1615			1172		1770	3483		1770	3532	
Peak-hour factor, PHF	0.93	0.93	0.93	0.93	0.93	0.93	0.93	0.93	0.93	0.93	0.93	0.93
Growth Factor (vph)	167%	167%	167%	167%	167%	167%	120%	120%	120%	167%	120%	167%
Adj. Flow (vph)	20	50	147	57	34	61	58	480	44	70	654	7
RTOR Reduction (vph)	0	120	0	0	50	0	0	6	0	0	0	0
Lane Group Flow (vph)	0	97	0	0	102	0	58	518	0	70	661	0
Confl. Peds. (#/hr)	10		10	10		10	10		10	10		10
Turn Type	Perm	NA		Perm	NA		Prot	NA		Prot	NA	
Protected Phases		4			8		5	2		1	6	
Permitted Phases	4			8								
Actuated Green, G (s)		12.4			12.4		4.7	35.2		5.3	36.1	
Effective Green, g (s)		12.4			12.4		4.7	35.2		5.3	36.1	
Actuated g/C Ratio		0.18			0.18		0.07	0.52		0.08	0.53	
Clearance Time (s)		4.9			4.9		4.4	5.8		4.4	5.5	
Vehicle Extension (s)		2.0			2.0		2.0	2.0		2.0	2.0	
Lane Grp Cap (vph)		294			213		122	1802		137	1875	
v/s Ratio Prot							0.03	0.15		c0.04	c0.19	
v/s Ratio Perm		0.06			c0.09							
v/c Ratio		0.33			0.48		0.48	0.29		0.51	0.35	
Uniform Delay, d1		24.2			24.9		30.5	9.3		30.1	9.2	
Progression Factor		1.00			1.26		1.31	0.88		1.00	1.00	
Incremental Delay, d2		0.2			0.6		1.0	0.4		1.3	0.5	
Delay (s)		24.4			32.0		40.9	8.5		31.4	9.7	
Level of Service		C			C		D	A		C	A	
Approach Delay (s)		24.4			32.0			11.7			11.8	
Approach LOS		C			C			B			B	

Intersection Summary			
HCM 2000 Control Delay	15.2	HCM 2000 Level of Service	B
HCM 2000 Volume to Capacity ratio	0.40		
Actuated Cycle Length (s)	68.0	Sum of lost time (s)	15.1
Intersection Capacity Utilization	55.1%	ICU Level of Service	B
Analysis Period (min)	15		
c Critical Lane Group			

Movement	EBL	EBR	EBR2	NBL	NBT	NBR	SBL	SBT	SBR	NWL2	NWL	NWR
Lane Configurations												
Volume (vph)	100	33	160	70	375	16	685	656	100	15	12	568
Ideal Flow (vphpl)	1900	1900	1900	1900	1900	1900	1900	1900	1900	1900	1900	1900
Total Lost time (s)	4.9	4.9		4.4	5.3		4.4	5.3			4.9	4.4
Lane Util. Factor	1.00	1.00		1.00	0.95		0.97	0.95			1.00	0.95
Frpb, ped/bikes	1.00	1.00		1.00	1.00		1.00	0.99			0.98	0.99
Flpb, ped/bikes	0.99	1.00		1.00	1.00		1.00	1.00			0.99	1.00
Frt	1.00	0.85		1.00	0.99		1.00	0.98			0.87	0.85
Flt Protected	0.95	1.00		0.95	1.00		0.95	1.00			0.99	1.00
Satd. Flow (prot)	1758	1583		1770	3515		3433	3455			1573	1495
Flt Permitted	0.27	1.00		0.95	1.00		0.95	1.00			0.98	1.00
Satd. Flow (perm)	491	1583		1770	3515		3433	3455			1556	1495
Peak-hour factor, PHF	0.98	0.98	0.98	0.98	0.98	0.98	0.98	0.98	0.98	0.98	0.98	0.98
Growth Factor (vph)	100%	200%	100%	110%	110%	100%	95%	111%	100%	100%	300%	110%
Adj. Flow (vph)	102	67	163	79	421	16	664	743	102	15	37	638
RTOR Reduction (vph)	0	71	0	0	3	0	0	9	0	0	148	62
Lane Group Flow (vph)	102	159	0	79	434	0	664	836	0	0	197	283
Confl. Peds. (#/hr)	10	10	10	10		10	10		10	10	10	10
Turn Type	Perm	Prot		Prot	NA		Prot	NA		Perm	Prot	pm+ov
Protected Phases		4		5	2		1	6			8	1
Permitted Phases	4									8		8
Actuated Green, G (s)	36.1	36.1		26.5	21.6		63.7	58.8			36.1	99.8
Effective Green, g (s)	36.1	36.1		26.5	21.6		63.7	58.8			36.1	99.8
Actuated g/C Ratio	0.27	0.27		0.19	0.16		0.47	0.43			0.27	0.73
Clearance Time (s)	4.9	4.9		4.4	5.3		4.4	5.3			4.9	4.4
Vehicle Extension (s)	2.0	2.0		2.0	2.0		2.0	2.0			2.0	2.0
Lane Grp Cap (vph)	130	420		344	558		1607	1493			413	1097
v/s Ratio Prot		0.10		c0.04	c0.12		0.19	c0.24				0.12
v/s Ratio Perm	c0.21										0.13	0.07
v/c Ratio	0.78	0.38		0.23	0.78		0.41	0.56			0.48	0.26
Uniform Delay, d1	46.3	40.8		46.1	54.9		23.8	28.9			42.0	5.9
Progression Factor	1.00	1.00		0.75	0.78		0.94	0.97			2.07	0.11
Incremental Delay, d2	24.2	0.2		0.1	10.0		0.7	1.3			0.2	0.0
Delay (s)	70.6	41.0		34.7	52.6		23.2	29.2			87.2	0.7
Level of Service	E	D		C	D		C	C			F	A
Approach Delay (s)	50.1				49.9			26.6			44.0	
Approach LOS	D				D			C			D	

Intersection Summary			
HCM 2000 Control Delay	37.0	HCM 2000 Level of Service	D
HCM 2000 Volume to Capacity ratio	0.65		
Actuated Cycle Length (s)	136.0	Sum of lost time (s)	14.6
Intersection Capacity Utilization	73.6%	ICU Level of Service	D
Analysis Period (min)	15		
c Critical Lane Group			

Movement	WBL	WBR	NBT	NBR	SBL	SBT
Lane Configurations						
Volume (vph)	873	0	504	848	0	821
Ideal Flow (vphpl)	1900	1900	1900	1900	1900	1900
Total Lost time (s)	5.5		5.5	5.5		5.5
Lane Util. Factor	0.97		0.95	1.00		0.95
Frpb, ped/bikes	1.00		1.00	0.98		1.00
Flpb, ped/bikes	1.00		1.00	1.00		1.00
Frt	1.00		1.00	0.85		1.00
Flt Protected	0.95		1.00	1.00		1.00
Satd. Flow (prot)	3433		3539	1546		3539
Flt Permitted	0.95		1.00	1.00		1.00
Satd. Flow (perm)	3433		3539	1546		3539
Peak-hour factor, PHF	0.96	0.96	0.96	0.96	0.96	0.96
Growth Factor (vph)	110%	100%	100%	110%	100%	110%
Adj. Flow (vph)	1000	0	525	972	0	941
RTOR Reduction (vph)	0	0	0	515	0	0
Lane Group Flow (vph)	1000	0	525	457	0	941
Confl. Peds. (#/hr)	10	10		10	10	
Turn Type	Prot		NA	Perm		NA
Protected Phases	8		2			6
Permitted Phases				2		
Actuated Green, G (s)	25.0		32.0	32.0		32.0
Effective Green, g (s)	25.0		32.0	32.0		32.0
Actuated g/C Ratio	0.37		0.47	0.47		0.47
Clearance Time (s)	5.5		5.5	5.5		5.5
Vehicle Extension (s)	2.0		2.0	2.0		2.0
Lane Grp Cap (vph)	1262		1665	727		1665
v/s Ratio Prot	c0.29		0.15			0.27
v/s Ratio Perm				c0.30		
v/c Ratio	0.79		0.32	0.63		0.57
Uniform Delay, d1	19.2		11.2	13.5		13.0
Progression Factor	2.07		1.00	1.00		1.64
Incremental Delay, d2	1.7		0.5	4.1		1.2
Delay (s)	41.4		11.7	17.6		22.5
Level of Service	D		B	B		C
Approach Delay (s)	41.4		15.6			22.5
Approach LOS	D		B			C

Intersection Summary			
HCM 2000 Control Delay	25.0	HCM 2000 Level of Service	C
HCM 2000 Volume to Capacity ratio	0.70		
Actuated Cycle Length (s)	68.0	Sum of lost time (s)	11.0
Intersection Capacity Utilization	63.4%	ICU Level of Service	B
Analysis Period (min)	15		
c Critical Lane Group			

Movement	EBL	EBT	EBR	WBL	WBT	WBR	SEL	SET	SER	NWL	NWT	NWR
Lane Configurations												
Volume (vph)	37	638	219	204	657	358	452	266	24	230	193	127
Ideal Flow (vphpl)	1900	1900	1900	1900	1900	1900	1900	1900	1900	1900	1900	1900
Total Lost time (s)	5.0	5.0		5.0	5.0		5.0	5.0		5.0	5.0	5.0
Lane Util. Factor	1.00	0.95		1.00	0.95		0.95	0.95		0.95	0.95	1.00
Frpb, ped/bikes	1.00	0.99		1.00	0.99		1.00	1.00		1.00	1.00	0.97
Flpb, ped/bikes	1.00	1.00		1.00	1.00		1.00	1.00		1.00	1.00	1.00
Frt	1.00	0.96		1.00	0.95		1.00	0.99		1.00	1.00	0.85
Flt Protected	0.95	1.00		0.95	1.00		0.95	0.99		0.95	0.99	1.00
Satd. Flow (prot)	1770	3374		1770	3314		1681	1742		1681	1760	1539
Flt Permitted	0.95	1.00		0.95	1.00		0.95	0.99		0.95	0.99	1.00
Satd. Flow (perm)	1770	3374		1770	3314		1681	1742		1681	1760	1539
Peak-hour factor, PHF	0.94	0.94	0.94	0.94	0.94	0.94	0.94	0.94	0.94	0.94	0.94	0.94
Growth Factor (vph)	96%	96%	96%	96%	98%	96%	88%	115%	88%	125%	125%	125%
Adj. Flow (vph)	38	652	224	208	685	366	423	325	22	306	257	169
RTOR Reduction (vph)	0	25	0	0	47	0	0	1	0	0	0	135
Lane Group Flow (vph)	38	851	0	208	1004	0	381	388	0	275	288	34
Confl. Peds. (#/hr)	10		10	10		10	10		10	10		10
Turn Type	Prot	NA		Prot	NA		Split	NA		Split	NA	Perm
Protected Phases	7			3			6	6		5	5	
Permitted Phases		4			8							5
Actuated Green, G (s)	6.5	36.1		14.2	43.8		38.7	38.7		27.0	27.0	27.0
Effective Green, g (s)	6.5	36.1		14.2	43.8		38.7	38.7		27.0	27.0	27.0
Actuated g/C Ratio	0.05	0.27		0.10	0.32		0.28	0.28		0.20	0.20	0.20
Clearance Time (s)	5.0	5.0		5.0	5.0		5.0	5.0		5.0	5.0	5.0
Vehicle Extension (s)	2.0	2.0		2.0	2.0		2.0	2.0		2.0	2.0	2.0
Lane Grp Cap (vph)	84	895		184	1067		478	495		333	349	305
v/s Ratio Prot	0.02			c0.12			c0.23	0.22		0.16	c0.16	
v/s Ratio Perm		0.25			c0.30							0.02
v/c Ratio	0.45	0.95		1.13	0.94		0.80	0.78		0.83	0.83	0.11
Uniform Delay, d1	63.0	49.1		60.9	44.8		45.0	44.8		52.2	52.2	44.7
Progression Factor	1.01	0.99		1.00	1.00		1.07	1.07		1.22	1.22	2.62
Incremental Delay, d2	0.8	13.2		105.8	15.2		12.2	11.0		14.3	13.7	0.1
Delay (s)	64.4	61.7		166.7	60.0		60.4	59.0		78.1	77.5	117.1
Level of Service	E	E		F	E		E	E		E	E	F
Approach Delay (s)		61.8			77.6			59.7			86.9	
Approach LOS		E			E			E			F	

Intersection Summary			
HCM 2000 Control Delay	71.8	HCM 2000 Level of Service	E
HCM 2000 Volume to Capacity ratio	0.91		
Actuated Cycle Length (s)	136.0	Sum of lost time (s)	20.0
Intersection Capacity Utilization	88.4%	ICU Level of Service	E
Analysis Period (min)	15		
c Critical Lane Group			

Movement	EBL	EBT	EBR	WBL	WBT	WBR	NBL	NBT	NBR	SBL	SBT	SBR
Lane Configurations												
Volume (vph)	256	824	94	5	773	42	68	7	10	122	21	446
Ideal Flow (vphpl)	1900	1900	1900	1900	1900	1900	1900	1900	1900	1900	1900	1900
Total Lost time (s)	5.0	5.0		5.0	5.0			4.9			5.0	5.0
Lane Util. Factor	1.00	0.95		1.00	0.95			1.00			1.00	1.00
Frpb, ped/bikes	1.00	1.00		1.00	1.00			1.00			1.00	0.98
Flpb, ped/bikes	1.00	1.00		1.00	1.00			0.99			0.99	1.00
Frt	1.00	0.98		1.00	0.99			0.98			1.00	0.85
Flt Protected	0.95	1.00		0.95	1.00			0.96			0.96	1.00
Satd. Flow (prot)	1770	3472		1762	3508			1748			1776	1552
Flt Permitted	0.95	1.00		0.95	1.00			0.67			0.75	1.00
Satd. Flow (perm)	1770	3472		1762	3508			1219			1381	1552
Peak-hour factor, PHF	0.91	0.91	0.91	0.91	0.91	0.91	0.91	0.91	0.91	0.91	0.91	0.91
Growth Factor (vph)	96%	96%	96%	96%	96%	96%	96%	96%	96%	96%	96%	96%
Adj. Flow (vph)	270	869	99	5	815	44	72	7	11	129	22	471
RTOR Reduction (vph)	0	8	0	0	5	0	0	9	0	0	0	375
Lane Group Flow (vph)	270	960	0	5	854	0	0	81	0	0	151	96
Confl. Peds. (#/hr)	10		10	10		10	10		10	10		10
Turn Type	Prot	NA		Prot	NA		Perm	NA		Perm	NA	Perm
Protected Phases	7	4		3	8			2			6	
Permitted Phases							2			6		6
Actuated Green, G (s)	11.7	32.0		0.9	21.2			12.4			12.3	12.3
Effective Green, g (s)	11.7	32.0		0.9	21.2			12.4			12.3	12.3
Actuated g/C Ratio	0.19	0.53		0.01	0.35			0.21			0.20	0.20
Clearance Time (s)	5.0	5.0		5.0	5.0			4.9			5.0	5.0
Vehicle Extension (s)	2.0	2.0		2.0	2.0			2.0			2.0	2.0
Lane Grp Cap (vph)	344	1845		26	1235			251			282	317
v/s Ratio Prot	c0.15	0.28		0.00	c0.24							
v/s Ratio Perm								0.07			c0.11	0.06
v/c Ratio	0.78	0.52		0.19	0.69			0.32			0.54	0.30
Uniform Delay, d1	23.1	9.1		29.3	16.7			20.3			21.4	20.3
Progression Factor	1.00	1.00		1.00	1.00			1.00			1.00	1.00
Incremental Delay, d2	10.3	0.1		1.3	1.4			0.3			1.0	0.2
Delay (s)	33.4	9.3		30.6	18.1			20.6			22.4	20.5
Level of Service	C	A		C	B			C			C	C
Approach Delay (s)		14.5			18.1			20.6			21.0	
Approach LOS		B			B			C			C	

Intersection Summary			
HCM 2000 Control Delay	17.2	HCM 2000 Level of Service	B
HCM 2000 Volume to Capacity ratio	0.67		
Actuated Cycle Length (s)	60.2	Sum of lost time (s)	15.0
Intersection Capacity Utilization	70.6%	ICU Level of Service	C
Analysis Period (min)	15		
c Critical Lane Group			

Movement	EBL	EBT	EBR	WBL	WBT	WBR	SEL	SET	SER	NWL	NWT	NWR
Lane Configurations												
Volume (vph)	94	12	64	54	15	53	44	552	119	47	407	28
Ideal Flow (vphpl)	1900	1900	1900	1900	1900	1900	1900	1900	1900	1900	1900	1900
Total Lost time (s)		5.0			5.0		5.0	5.0		5.0	5.0	
Lane Util. Factor		1.00			1.00		1.00	0.95		1.00	0.95	
Frpb, ped/bikes		0.99			0.99		1.00	0.99		1.00	1.00	
Flpb, ped/bikes		1.00			1.00		1.00	1.00		1.00	1.00	
Frt		0.95			0.94		1.00	0.97		1.00	0.98	
Flt Protected		0.97			0.98		0.95	1.00		0.95	1.00	
Satd. Flow (prot)		1700			1695		1770	3420		1770	3471	
Flt Permitted		0.79			0.79		0.95	1.00		0.95	1.00	
Satd. Flow (perm)		1378			1360		1770	3420		1770	3471	
Peak-hour factor, PHF	0.97	0.97	0.97	0.98	0.97	0.98	0.98	0.98	0.97	0.97	0.98	0.98
Growth Factor (vph)	100%	100%	100%	100%	100%	100%	100%	100%	100%	120%	120%	200%
Adj. Flow (vph)	97	12	66	55	15	54	45	563	123	58	498	57
RTOR Reduction (vph)	0	42	0	0	44	0	0	17	0	0	8	0
Lane Group Flow (vph)	0	133	0	0	80	0	45	669	0	58	547	0
Confl. Peds. (#/hr)	10		10	10		10	10		10	10		10
Turn Type	Perm	NA		Perm	NA		Prot	NA		Prot	NA	
Protected Phases		4			8		1			5	2	
Permitted Phases	4			8				6				
Actuated Green, G (s)		12.0			12.0		6.3	36.3		4.7	34.7	
Effective Green, g (s)		12.0			12.0		6.3	36.3		4.7	34.7	
Actuated g/C Ratio		0.18			0.18		0.09	0.53		0.07	0.51	
Clearance Time (s)		5.0			5.0		5.0	5.0		5.0	5.0	
Vehicle Extension (s)		2.0			2.0		2.0	2.0		2.0	2.0	
Lane Grp Cap (vph)		243			240		163	1825		122	1771	
v/s Ratio Prot							0.03			c0.03	0.16	
v/s Ratio Perm		c0.10			0.06			c0.20				
v/c Ratio		0.55			0.33		0.28	0.37		0.48	0.31	
Uniform Delay, d1		25.5			24.5		28.7	9.2		30.5	9.7	
Progression Factor		1.00			1.00		1.08	1.25		1.00	1.00	
Incremental Delay, d2		1.4			0.3		0.1	0.2		1.1	0.5	
Delay (s)		26.9			24.8		31.2	11.7		31.5	10.1	
Level of Service		C			C		C	B		C	B	
Approach Delay (s)		26.9			24.8			12.9			12.2	
Approach LOS		C			C			B			B	

Intersection Summary			
HCM 2000 Control Delay	15.0	HCM 2000 Level of Service	B
HCM 2000 Volume to Capacity ratio	0.42		
Actuated Cycle Length (s)	68.0	Sum of lost time (s)	15.0
Intersection Capacity Utilization	50.6%	ICU Level of Service	A
Analysis Period (min)	15		
c Critical Lane Group			

Movement	EBL	EBT	WBT	WBR	SBL	SBR
Lane Configurations						
Volume (vph)	149	663	342	291	460	221
Ideal Flow (vphpl)	1900	1900	1900	1900	1900	1900
Total Lost time (s)	5.0	5.0	5.0	5.0	5.0	5.0
Lane Util. Factor	1.00	0.95	0.95	1.00	0.97	0.91
Frpb, ped/bikes	1.00	1.00	1.00	0.97	1.00	0.98
Flpb, ped/bikes	1.00	1.00	1.00	1.00	0.99	1.00
Frt	1.00	1.00	1.00	0.85	0.99	0.85
Flt Protected	0.95	1.00	1.00	1.00	0.95	1.00
Satd. Flow (prot)	1593	3185	3185	1379	3041	1271
Flt Permitted	0.95	1.00	1.00	1.00	0.95	1.00
Satd. Flow (perm)	1593	3185	3185	1379	3041	1271
Peak-hour factor, PHF	0.95	0.95	0.95	0.95	0.95	0.95
Growth Factor (vph)	110%	150%	150%	150%	100%	100%
Adj. Flow (vph)	173	1047	540	459	484	233
RTOR Reduction (vph)	0	0	0	329	4	155
Lane Group Flow (vph)	173	1047	540	130	503	55
Confl. Peds. (#/hr)	10			10	10	10
Turn Type	Prot	NA	NA	Perm	Perm	Perm
Protected Phases	7	4	8			
Permitted Phases				8	6	6
Actuated Green, G (s)	11.6	33.2	16.6	16.6	15.4	15.4
Effective Green, g (s)	11.6	33.2	16.6	16.6	15.4	15.4
Actuated g/C Ratio	0.20	0.57	0.28	0.28	0.26	0.26
Clearance Time (s)	5.0	5.0	5.0	5.0	5.0	5.0
Vehicle Extension (s)	2.0	2.0	2.0	2.0	2.0	2.0
Lane Grp Cap (vph)	315	1804	902	390	799	334
v/s Ratio Prot	0.11	c0.33	0.17			
v/s Ratio Perm				0.09	c0.17	0.04
v/c Ratio	0.55	0.58	0.60	0.33	0.63	0.17
Uniform Delay, d1	21.1	8.2	18.1	16.6	19.1	16.6
Progression Factor	1.00	1.00	1.00	1.00	1.00	1.00
Incremental Delay, d2	1.1	0.3	0.7	0.2	1.1	0.1
Delay (s)	22.2	8.5	18.8	16.8	20.2	16.7
Level of Service	C	A	B	B	C	B
Approach Delay (s)		10.5	17.9		19.2	
Approach LOS		B	B		B	

Intersection Summary			
HCM 2000 Control Delay	15.1	HCM 2000 Level of Service	B
HCM 2000 Volume to Capacity ratio	0.66		
Actuated Cycle Length (s)	58.6	Sum of lost time (s)	15.0
Intersection Capacity Utilization	57.1%	ICU Level of Service	B
Analysis Period (min)	15		
c Critical Lane Group			

Movement	EBL	EBT	EBR	WBL	WBT	WBR	NBL	NBT	NBR	SBL	SBT	SBR
Lane Configurations												
Volume (vph)	56	931	35	38	523	49	24	4	24	102	7	50
Ideal Flow (vphpl)	1900	1900	1900	1900	1900	1900	1900	1900	1900	1900	1900	1900
Total Lost time (s)	5.0	5.0		5.0	5.0			5.0	5.0		5.0	5.0
Lane Util. Factor	1.00	0.95		1.00	0.95			1.00	1.00		1.00	1.00
Frpb, ped/bikes	1.00	1.00		1.00	1.00			1.00	0.98		1.00	0.98
Flpb, ped/bikes	1.00	1.00		1.00	1.00			0.99	1.00		0.99	1.00
Frt	1.00	1.00		1.00	0.99			1.00	0.85		1.00	0.85
Flt Protected	0.95	1.00		0.95	1.00			0.96	1.00		0.96	1.00
Satd. Flow (prot)	1593	3521		1770	3480			1776	1547		1762	1547
Flt Permitted	0.95	1.00		0.95	1.00			0.57	1.00		0.70	1.00
Satd. Flow (perm)	1593	3521		1770	3480			1054	1547		1284	1547
Peak-hour factor, PHF	0.94	0.94	0.94	0.94	0.94	0.94	0.94	0.94	0.94	0.94	0.94	0.94
Growth Factor (vph)	110%	150%	110%	150%	150%	150%	200%	200%	200%	200%	200%	200%
Adj. Flow (vph)	66	1486	41	61	835	78	51	9	51	217	15	106
RTOR Reduction (vph)	0	2	0	0	6	0	0	0	40	0	0	82
Lane Group Flow (vph)	66	1525	0	61	907	0	0	60	11	0	232	24
Confl. Peds. (#/hr)	10		10	10		10	10		10	10		10
Parking (#/hr)	0											
Turn Type	Prot	NA		Prot	NA		Perm	NA	Perm	Perm	NA	Perm
Protected Phases	7	4		3	8			2			6	
Permitted Phases							2		2	6		6
Actuated Green, G (s)	6.8	45.8		6.3	45.3			19.2	19.2		19.2	19.2
Effective Green, g (s)	6.8	45.8		6.3	45.3			19.2	19.2		19.2	19.2
Actuated g/C Ratio	0.08	0.53		0.07	0.52			0.22	0.22		0.22	0.22
Clearance Time (s)	5.0	5.0		5.0	5.0			5.0	5.0		5.0	5.0
Vehicle Extension (s)	2.0	2.0		2.0	2.0			2.0	2.0		2.0	2.0
Lane Grp Cap (vph)	125	1868		129	1826			234	344		285	344
v/s Ratio Prot	c0.04	c0.43		0.03	0.26							
v/s Ratio Perm								0.06	0.01		c0.18	0.02
v/c Ratio	0.53	0.82		0.47	0.50			0.26	0.03		0.81	0.07
Uniform Delay, d1	38.2	16.8		38.4	13.2			27.7	26.3		31.9	26.5
Progression Factor	1.00	1.00		1.00	1.00			1.00	1.00		1.00	1.00
Incremental Delay, d2	1.9	4.1		1.0	0.1			0.2	0.0		15.4	0.0
Delay (s)	40.1	20.9		39.4	13.3			27.9	26.3		47.2	26.5
Level of Service	D	C		D	B			C	C		D	C
Approach Delay (s)		21.6			14.9			27.1			40.7	
Approach LOS		C			B			C			D	

Intersection Summary			
HCM 2000 Control Delay	21.8	HCM 2000 Level of Service	C
HCM 2000 Volume to Capacity ratio	0.79		
Actuated Cycle Length (s)	86.3	Sum of lost time (s)	15.0
Intersection Capacity Utilization	74.7%	ICU Level of Service	D
Analysis Period (min)	15		

c Critical Lane Group

Movement	WBL	WBR	NBT	NBR	SBL	SBT
Lane Configurations						
Volume (veh/h)	20	26	577	31	44	620
Sign Control	Stop		Free			Free
Grade	0%		0%			0%
Peak Hour Factor	0.88	0.88	0.88	0.88	0.88	0.88
Hourly flow rate (vph)	23	30	787	35	50	845
Pedestrians						
Lane Width (ft)						
Walking Speed (ft/s)						
Percent Blockage						
Right turn flare (veh)						
Median type			None			None
Median storage veh)						
Upstream signal (ft)			1175			441
pX, platoon unblocked	0.98	0.96			0.96	
vC, conflicting volume	1327	411			822	
vC1, stage 1 conf vol						
vC2, stage 2 conf vol						
vCu, unblocked vol	1128	314			741	
tC, single (s)	6.8	6.9			4.1	
tC, 2 stage (s)						
tF (s)	3.5	3.3			2.2	
p0 queue free %	88	96			94	
cM capacity (veh/h)	182	657			831	

Direction, Lane #	WB 1	NB 1	NB 2	SB 1	SB 2	SB 3
Volume Total	52	525	298	50	423	423
Volume Left	23	0	0	50	0	0
Volume Right	30	0	35	0	0	0
cSH	308	1700	1700	831	1700	1700
Volume to Capacity	0.17	0.31	0.18	0.06	0.25	0.25
Queue Length 95th (ft)	15	0	0	5	0	0
Control Delay (s)	19.0	0.0	0.0	9.6	0.0	0.0
Lane LOS	C			A		
Approach Delay (s)	19.0	0.0		0.5		
Approach LOS	C					

Intersection Summary			
Average Delay	0.8		
Intersection Capacity Utilization	36.8%	ICU Level of Service	A
Analysis Period (min)	15		

Movement	EBL	EBT	EBR	WBL	WBT	WBR	NBL	NBT	NBR	SBL	SBT	SBR
Lane Configurations												
Sign Control		Stop			Stop			Stop			Stop	
Volume (vph)	218	22	5	1	15	39	4	107	3	32	151	241
Peak Hour Factor	0.86	0.86	0.86	0.86	0.86	0.86	0.86	0.86	0.86	0.86	0.86	0.86
Hourly flow rate (vph)	355	36	8	2	24	63	7	174	5	52	246	392

Direction, Lane #	EB 1	WB 1	NB 1	SB 1
Volume Total (vph)	399	90	186	690
Volume Left (vph)	355	2	7	52
Volume Right (vph)	8	63	5	392
Hadj (s)	0.20	-0.39	0.03	-0.29
Departure Headway (s)	6.7	7.1	6.9	5.8
Degree Utilization, x	0.74	0.18	0.35	1.0
Capacity (veh/h)	525	464	487	613
Control Delay (s)	26.4	11.5	13.6	90.4
Approach Delay (s)	26.4	11.5	13.6	90.4
Approach LOS	D	B	B	F

Intersection Summary			
Delay	56.1		
Level of Service	F		
Intersection Capacity Utilization	78.3%	ICU Level of Service	D
Analysis Period (min)	15		

Movement	NBL	NBT	SBT	SBR	SEL	SER
Lane Configurations						
Volume (veh/h)	4	598	699	26	32	24
Sign Control		Free	Free		Stop	
Grade		0%	0%		0%	
Peak Hour Factor	0.92	0.92	0.92	0.92	0.92	0.92
Hourly flow rate (vph)	4	650	760	28	35	26
Pedestrians						
Lane Width (ft)						
Walking Speed (ft/s)						
Percent Blockage						
Right turn flare (veh)						
Median type		None	None			
Median storage veh)						
Upstream signal (ft)		748	431			
pX, platoon unblocked	0.78				0.85	0.78
vC, conflicting volume	788				1433	774
vC1, stage 1 conf vol						
vC2, stage 2 conf vol						
vCu, unblocked vol	583				1023	565
tC, single (s)	4.1				6.4	6.2
tC, 2 stage (s)						
tF (s)	2.2				3.5	3.3
p0 queue free %	99				84	94
cM capacity (veh/h)	770				221	407

Direction, Lane #	NB 1	NB 2	SB 1	SE 1
Volume Total	4	650	788	61
Volume Left	4	0	0	35
Volume Right	0	0	28	26
cSH	770	1700	1700	275
Volume to Capacity	0.01	0.38	0.46	0.22
Queue Length 95th (ft)	0	0	0	21
Control Delay (s)	9.7	0.0	0.0	21.8
Lane LOS	A			C
Approach Delay (s)	0.1		0.0	21.8
Approach LOS				C

Intersection Summary			
Average Delay	0.9		
Intersection Capacity Utilization	48.4%	ICU Level of Service	A
Analysis Period (min)	15		

Morena Blvd Station Area Planning Study

Appendix E:

LOS Reports - Preferred Alternative

Mid-term

Movement	WBL	WBR	NBT	NBR	SBL	SBT
Lane Configurations						
Volume (vph)	37	62	527	37	44	307
Ideal Flow (vphpl)	1900	1900	1900	1900	1900	1900
Total Lost time (s)	4.4		6.0		4.4	5.9
Lane Util. Factor	1.00		0.95		1.00	1.00
Frpb, ped/bikes	0.99		1.00		1.00	1.00
Flpb, ped/bikes	1.00		1.00		1.00	1.00
Frt	0.92		0.99		1.00	1.00
Flt Protected	0.98		1.00		0.95	1.00
Satd. Flow (prot)	1655		3495		1770	1863
Flt Permitted	0.98		1.00		0.95	1.00
Satd. Flow (perm)	1655		3495		1770	1863
Peak-hour factor, PHF	0.92	0.92	0.92	0.92	0.92	0.92
Growth Factor (vph)	100%	100%	92%	100%	100%	95%
Adj. Flow (vph)	40	67	527	40	48	317
RTOR Reduction (vph)	62	0	2	0	0	0
Lane Group Flow (vph)	45	0	565	0	48	317
Confl. Peds. (#/hr)				3		
Confl. Bikes (#/hr)		2	6			4
Turn Type	Prot		NA		Prot	NA
Protected Phases	8		2		1	6
Permitted Phases						
Actuated Green, G (s)	5.7		49.9		4.4	58.8
Effective Green, g (s)	5.7		49.9		4.4	58.8
Actuated g/C Ratio	0.08		0.67		0.06	0.79
Clearance Time (s)	4.4		6.0		4.4	5.9
Vehicle Extension (s)	2.0		4.4		2.0	4.2
Lane Grp Cap (vph)	126		2331		104	1464
v/s Ratio Prot	c0.03		c0.16		c0.03	0.17
v/s Ratio Perm						
v/c Ratio	0.36		0.24		0.46	0.22
Uniform Delay, d1	32.8		4.9		34.1	2.1
Progression Factor	1.00		1.00		1.00	1.00
Incremental Delay, d2	0.6		0.2		1.2	0.3
Delay (s)	33.4		5.2		35.2	2.4
Level of Service	C		A		D	A
Approach Delay (s)	33.4		5.2			6.7
Approach LOS	C		A			A

Intersection Summary			
HCM 2000 Control Delay	8.6	HCM 2000 Level of Service	A
HCM 2000 Volume to Capacity ratio	0.27		
Actuated Cycle Length (s)	74.8	Sum of lost time (s)	14.8
Intersection Capacity Utilization	36.1%	ICU Level of Service	A
Analysis Period (min)	15		

c Critical Lane Group

Movement	EBL	EBT	EBR	WBL	WBT	WBR	NBL	NBT	NBR	SBL	SBT	SBR
Lane Configurations												
Volume (vph)	250	336	0	0	837	657	34	0	311	0	0	0
Ideal Flow (vphpl)	1900	1900	1900	1900	1900	1900	1900	1900	1900	1900	1900	1900
Total Lost time (s)	5.0	5.0			5.0	5.0	5.5		5.5			
Lane Util. Factor	1.00	0.95			0.95	1.00	1.00		1.00			
Frpb, ped/bikes	1.00	1.00			1.00	1.00	1.00		0.99			
Flpb, ped/bikes	1.00	1.00			1.00	1.00	1.00		1.00			
Frt	1.00	1.00			1.00	0.85	1.00		0.85			
Flt Protected	0.95	1.00			1.00	1.00	0.95		1.00			
Satd. Flow (prot)	1770	3539			3539	1583	1770		1565			
Flt Permitted	0.95	1.00			1.00	1.00	0.95		1.00			
Satd. Flow (perm)	1770	3539			3539	1583	1770		1565			
Peak-hour factor, PHF	0.97	0.97	0.97	0.97	0.97	0.97	0.97	0.97	0.97	0.97	0.97	0.97
Growth Factor (vph)	130%	130%	130%	130%	130%	130%	130%	130%	130%	130%	130%	130%
Adj. Flow (vph)	335	450	0	0	1122	881	46	0	417	0	0	0
RTOR Reduction (vph)	0	0	0	0	0	432	0	0	0	0	0	0
Lane Group Flow (vph)	335	450	0	0	1122	449	46	0	417	0	0	0
Confl. Peds. (#/hr)						6			1			
Confl. Bikes (#/hr)		4			1							
Turn Type	Prot	NA			NA	Prot	Prot		custom			
Protected Phases	7	4			8	8	2		2			
Permitted Phases									4			
Actuated Green, G (s)	16.7	46.9			25.2	25.2	6.6		53.5			
Effective Green, g (s)	16.7	46.9			25.2	25.2	6.6		53.5			
Actuated g/C Ratio	0.26	0.73			0.39	0.39	0.10		0.84			
Clearance Time (s)	5.0	5.0			5.0	5.0	5.5		5.5			
Vehicle Extension (s)	2.0	2.0			2.0	2.0	2.0		2.0			
Lane Grp Cap (vph)	461	2593			1393	623	182		1442			
v/s Ratio Prot	c0.19	0.13			c0.32	0.28	0.03		c0.03			
v/s Ratio Perm									0.24			
v/c Ratio	0.73	0.17			0.81	0.72	0.25		0.29			
Uniform Delay, d1	21.6	2.6			17.2	16.4	26.4		1.1			
Progression Factor	1.00	1.00			1.00	1.00	1.00		1.00			
Incremental Delay, d2	4.8	0.0			3.3	3.5	0.3		0.0			
Delay (s)	26.4	2.6			20.5	19.9	26.7		1.2			
Level of Service	C	A			C	B	C		A			
Approach Delay (s)		12.8			20.3			3.7			0.0	
Approach LOS		B			C			A			A	

Intersection Summary			
HCM 2000 Control Delay	16.1	HCM 2000 Level of Service	B
HCM 2000 Volume to Capacity ratio	0.73		
Actuated Cycle Length (s)	64.0	Sum of lost time (s)	15.5
Intersection Capacity Utilization	79.9%	ICU Level of Service	D
Analysis Period (min)	15		

c Critical Lane Group

Movement	WBL	WBR	NBT	NBR	SBL	SBT
Lane Configurations						
Volume (vph)	85	36	526	149	100	333
Ideal Flow (vphpl)	1900	1900	1900	1900	1900	1900
Lane Width	10	10	10	10	10	10
Total Lost time (s)	4.9	4.9	5.3	5.3	4.4	5.0
Lane Util. Factor	1.00	1.00	0.95	1.00	1.00	1.00
Frpb, ped/bikes	1.00	0.99	1.00	0.98	1.00	1.00
Flpb, ped/bikes	1.00	1.00	1.00	1.00	1.00	1.00
Frt	1.00	0.85	1.00	0.85	1.00	1.00
Flt Protected	0.95	1.00	1.00	1.00	0.95	1.00
Satd. Flow (prot)	1486	1312	2888	1300	1486	1292
Flt Permitted	0.95	1.00	1.00	1.00	0.95	1.00
Satd. Flow (perm)	1486	1312	2888	1300	1486	1292
Peak-hour factor, PHF	0.90	0.90	0.90	0.90	0.90	0.90
Growth Factor (vph)	120%	150%	106%	112%	100%	105%
Adj. Flow (vph)	113	60	620	185	111	388
RTOR Reduction (vph)	0	50	0	93	0	0
Lane Group Flow (vph)	113	10	620	92	111	388
Confl. Peds. (#/hr)				1		
Confl. Bikes (#/hr)		1	5	1		4
Heavy Vehicles (%)	2%	2%	5%	2%	2%	5%
Parking (#/hr)						10
Turn Type	Prot	Perm	NA	Perm	Prot	NA
Protected Phases	8		2		1	6
Permitted Phases		8		2		
Actuated Green, G (s)	11.3	11.3	32.9	32.9	7.7	45.3
Effective Green, g (s)	11.3	11.3	32.9	32.9	7.7	45.3
Actuated g/C Ratio	0.17	0.17	0.49	0.49	0.12	0.68
Clearance Time (s)	4.9	4.9	5.3	5.3	4.4	5.0
Vehicle Extension (s)	2.0	2.0	4.2	4.2	2.0	4.0
Lane Grp Cap (vph)	252	222	1428	643	172	880
v/s Ratio Prot	c0.08		0.21		c0.07	c0.30
v/s Ratio Perm		0.01		0.07		
v/c Ratio	0.45	0.05	0.43	0.14	0.65	0.44
Uniform Delay, d1	24.8	23.1	10.8	9.1	28.1	4.8
Progression Factor	1.00	1.00	1.00	1.00	1.00	1.00
Incremental Delay, d2	0.5	0.0	1.0	0.5	6.1	1.6
Delay (s)	25.3	23.1	11.8	9.6	34.2	6.4
Level of Service	C	C	B	A	C	A
Approach Delay (s)	24.5		11.3			12.6
Approach LOS	C		B			B

Intersection Summary			
HCM 2000 Control Delay	13.3	HCM 2000 Level of Service	B
HCM 2000 Volume to Capacity ratio	0.50		
Actuated Cycle Length (s)	66.5	Sum of lost time (s)	14.6
Intersection Capacity Utilization	41.7%	ICU Level of Service	A
Analysis Period (min)	15		
c Critical Lane Group			

Movement	EBL	EBT	EBR	WBL	WBT	WBR	NBL	NBT	NBR	SBL	SBT	SBR
Lane Configurations												
Volume (vph)	105	362	133	77	899	24	286	15	90	30	12	252
Ideal Flow (vphpl)	1900	1900	1900	1900	1900	1900	1900	1900	1900	1900	1900	1900
Total Lost time (s)	4.4	5.1	5.1	4.4	4.4		4.4	4.9		4.4	4.9	
Lane Util. Factor	1.00	0.95	1.00	1.00	0.95		1.00	1.00		1.00	1.00	
Frpb, ped/bikes	1.00	1.00	0.97	1.00	1.00		1.00	0.98		1.00	0.99	
Flpb, ped/bikes	1.00	1.00	1.00	1.00	1.00		1.00	1.00		1.00	1.00	
Frt	1.00	1.00	0.85	1.00	1.00		1.00	0.87		1.00	0.86	
Flt Protected	0.95	1.00	1.00	0.95	1.00		0.95	1.00		0.95	1.00	
Satd. Flow (prot)	1593	3185	1378	1593	3170		1593	1437		1593	1415	
Flt Permitted	0.95	1.00	1.00	0.95	1.00		0.95	1.00		0.95	1.00	
Satd. Flow (perm)	1593	3185	1378	1593	3170		1593	1437		1593	1415	
Peak-hour factor, PHF	0.98	0.98	0.98	0.98	0.98	0.98	0.98	0.98	0.98	0.98	0.98	0.98
Growth Factor (vph)	127%	127%	127%	127%	127%	127%	127%	127%	127%	127%	127%	127%
Adj. Flow (vph)	136	469	172	100	1165	31	371	19	117	39	16	327
RTOR Reduction (vph)	0	0	113	0	1	0	0	83	0	0	265	0
Lane Group Flow (vph)	136	469	59	100	1195	0	371	53	0	39	78	0
Confl. Peds. (#/hr)			4			5			9			3
Confl. Bikes (#/hr)			3		2	1					2	1
Turn Type	Prot	NA	Perm	Prot	NA		Prot	NA		Prot	NA	
Protected Phases	7	4		3	8		5	2		1	6	
Permitted Phases			4									
Actuated Green, G (s)	10.9	29.2	29.2	8.3	27.3		16.0	24.6		4.4	13.0	
Effective Green, g (s)	10.9	29.2	29.2	8.3	27.3		16.0	24.6		4.4	13.0	
Actuated g/C Ratio	0.13	0.34	0.34	0.10	0.32		0.19	0.29		0.05	0.15	
Clearance Time (s)	4.4	5.1	5.1	4.4	4.4		4.4	4.9		4.4	4.9	
Vehicle Extension (s)	2.0	4.3	4.3	2.0	3.9		2.0	2.0		2.0	2.0	
Lane Grp Cap (vph)	203	1090	471	155	1014		298	414		82	215	
v/s Ratio Prot	c0.09	c0.15		0.06	c0.38		c0.23	0.04		0.02	c0.05	
v/s Ratio Perm			0.04									
v/c Ratio	0.67	0.43	0.13	0.65	1.18		1.24	0.13		0.48	0.36	
Uniform Delay, d1	35.5	21.6	19.3	37.1	29.0		34.6	22.4		39.3	32.4	
Progression Factor	1.00	1.00	1.00	1.00	1.00		1.00	1.00		1.00	1.00	
Incremental Delay, d2	6.4	0.4	0.2	6.7	90.6		135.3	0.1		1.6	0.4	
Delay (s)	41.8	22.1	19.5	43.8	119.6		169.9	22.5		40.9	32.8	
Level of Service	D	C	B	D	F		F	C		D	C	
Approach Delay (s)		25.0			113.7			130.4			33.6	
Approach LOS		C			F			F			C	

Intersection Summary			
HCM 2000 Control Delay	82.9	HCM 2000 Level of Service	F
HCM 2000 Volume to Capacity ratio	0.96		
Actuated Cycle Length (s)	85.3	Sum of lost time (s)	18.8
Intersection Capacity Utilization	105.6%	ICU Level of Service	G
Analysis Period (min)	15		

c Critical Lane Group

Movement	WBL	WBR	NBT	NBR	SBL	SBT
Lane Configurations						
Volume (vph)	88	71	629	103	59	339
Ideal Flow (vphpl)	1900	1900	1900	1900	1900	1900
Lane Width	10	10	10	10	10	10
Total Lost time (s)	5.1		5.4	5.4	4.4	5.3
Lane Util. Factor	1.00		0.95	1.00	1.00	1.00
Frpb, ped/bikes	1.00		1.00	0.97	1.00	1.00
Flpb, ped/bikes	1.00		1.00	1.00	1.00	1.00
Frt	0.94		1.00	0.85	1.00	1.00
Flt Protected	0.97		1.00	1.00	0.95	1.00
Satd. Flow (prot)	1590		3303	1433	1652	1739
Flt Permitted	0.97		1.00	1.00	0.95	1.00
Satd. Flow (perm)	1590		3303	1433	1652	1739
Peak-hour factor, PHF	0.95	0.95	0.95	0.95	0.95	0.95
Growth Factor (vph)	105%	105%	105%	112%	105%	105%
Adj. Flow (vph)	97	78	695	121	65	375
RTOR Reduction (vph)	36	0	0	29	0	0
Lane Group Flow (vph)	139	0	695	92	65	375
Confl. Peds. (#/hr)				7	7	
Confl. Bikes (#/hr)			8			2
Turn Type	Prot		NA	Perm	Prot	NA
Protected Phases	8		2		1	6
Permitted Phases				2		
Actuated Green, G (s)	9.1		24.2	24.2	4.2	32.9
Effective Green, g (s)	9.1		24.2	24.2	4.2	32.9
Actuated g/C Ratio	0.17		0.46	0.46	0.08	0.63
Clearance Time (s)	5.1		5.4	5.4	4.4	5.3
Vehicle Extension (s)	2.0		4.0	4.0	2.0	4.0
Lane Grp Cap (vph)	276		1525	661	132	1091
v/s Ratio Prot	c0.09		c0.21		0.04	c0.22
v/s Ratio Perm				0.06		
v/c Ratio	0.50		0.46	0.14	0.49	0.34
Uniform Delay, d1	19.6		9.6	8.1	23.1	4.6
Progression Factor	1.00		1.00	1.00	1.00	1.00
Incremental Delay, d2	0.5		0.3	0.1	1.1	0.3
Delay (s)	20.1		9.9	8.2	24.1	4.9
Level of Service	C		A	A	C	A
Approach Delay (s)	20.1		9.7			7.7
Approach LOS	C		A			A

Intersection Summary			
HCM 2000 Control Delay	10.3	HCM 2000 Level of Service	B
HCM 2000 Volume to Capacity ratio	0.47		
Actuated Cycle Length (s)	52.4	Sum of lost time (s)	14.9
Intersection Capacity Utilization	43.8%	ICU Level of Service	A
Analysis Period (min)	15		
c Critical Lane Group			

Movement	WBL	WBR	NBT	NBR	SBL	SBT
Lane Configurations						
Volume (vph)	33	25	713	24	4	414
Ideal Flow (vphpl)	1900	1900	1900	1900	1900	1900
Lane Width	12	12	10	10	10	10
Total Lost time (s)	4.9		5.4	5.4	4.4	5.3
Lane Util. Factor	1.00		0.95	1.00	1.00	1.00
Frpb, ped/bikes	1.00		1.00	0.97	1.00	1.00
Flpb, ped/bikes	1.00		1.00	1.00	1.00	1.00
Frt	0.94		1.00	0.85	1.00	1.00
Flt Protected	0.97		1.00	1.00	0.95	1.00
Satd. Flow (prot)	1706		3303	1435	1647	1739
Flt Permitted	0.97		1.00	1.00	0.95	1.00
Satd. Flow (perm)	1706		3303	1435	1647	1739
Peak-hour factor, PHF	0.90	0.90	0.90	0.90	0.90	0.90
Growth Factor (vph)	105%	105%	105%	105%	200%	105%
Adj. Flow (vph)	38	29	832	28	9	483
RTOR Reduction (vph)	27	0	0	5	0	0
Lane Group Flow (vph)	40	0	832	23	9	483
Confl. Peds. (#/hr)				6	6	
Confl. Bikes (#/hr)			8			5
Turn Type	Prot		NA	Perm	Prot	NA
Protected Phases	8		2		1	6
Permitted Phases				2		
Actuated Green, G (s)	3.6		31.6	31.6	0.9	37.0
Effective Green, g (s)	3.6		31.6	31.6	0.9	37.0
Actuated g/C Ratio	0.07		0.62	0.62	0.02	0.73
Clearance Time (s)	4.9		5.4	5.4	4.4	5.3
Vehicle Extension (s)	2.0		4.3	4.3	2.0	4.0
Lane Grp Cap (vph)	120		2054	892	29	1266
v/s Ratio Prot	c0.02		0.25		0.01	c0.28
v/s Ratio Perm				0.02		
v/c Ratio	0.33		0.41	0.03	0.31	0.38
Uniform Delay, d1	22.5		4.9	3.7	24.6	2.6
Progression Factor	1.00		1.00	1.00	1.00	1.00
Incremental Delay, d2	0.6		0.2	0.0	2.2	0.3
Delay (s)	23.1		5.1	3.7	26.9	2.9
Level of Service	C		A	A	C	A
Approach Delay (s)	23.1		5.0			3.3
Approach LOS	C		A			A

Intersection Summary			
HCM 2000 Control Delay	5.3	HCM 2000 Level of Service	A
HCM 2000 Volume to Capacity ratio	0.42		
Actuated Cycle Length (s)	50.8	Sum of lost time (s)	14.7
Intersection Capacity Utilization	34.9%	ICU Level of Service	A
Analysis Period (min)	15		
c Critical Lane Group			

Movement	NBT	NBR	SBL	SBT	NWL	NWR
Lane Configurations						
Volume (vph)	450	21	92	334	8	280
Ideal Flow (vphpl)	1900	1900	1900	1900	1900	1900
Lane Width	10	10	10	10	10	10
Total Lost time (s)	5.5		5.5	5.5	5.5	5.5
Lane Util. Factor	0.95		1.00	1.00	1.00	1.00
Frpb, ped/bikes	1.00		1.00	1.00	1.00	0.98
Flpb, ped/bikes	1.00		1.00	1.00	1.00	1.00
Frt	0.99		1.00	1.00	1.00	0.85
Flt Protected	1.00		0.95	1.00	0.95	1.00
Satd. Flow (prot)	3280		1652	1739	1652	1449
Flt Permitted	1.00		0.95	1.00	0.95	1.00
Satd. Flow (perm)	3280		1652	1739	1652	1449
Peak-hour factor, PHF	0.88	0.88	0.88	0.88	0.88	0.88
Growth Factor (vph)	110%	100%	105%	111%	200%	101%
Adj. Flow (vph)	562	24	110	421	18	321
RTOR Reduction (vph)	3	0	0	0	0	268
Lane Group Flow (vph)	583	0	110	421	18	53
Confl. Peds. (#/hr)		1	1			10
Confl. Bikes (#/hr)	5			5		
Turn Type	NA		Prot	NA	Prot	Perm
Protected Phases	2		1	6	8	
Permitted Phases						8
Actuated Green, G (s)	13.7		6.5	25.7	7.3	7.3
Effective Green, g (s)	13.7		6.5	25.7	7.3	7.3
Actuated g/C Ratio	0.31		0.15	0.58	0.17	0.17
Clearance Time (s)	5.5		5.5	5.5	5.5	5.5
Vehicle Extension (s)	2.0		2.0	2.0	2.0	2.0
Lane Grp Cap (vph)	1021		244	1015	274	240
v/s Ratio Prot	c0.18		0.07	c0.24	0.01	
v/s Ratio Perm						c0.04
v/c Ratio	0.57		0.45	0.41	0.07	0.22
Uniform Delay, d1	12.7		17.1	5.0	15.5	15.9
Progression Factor	1.00		1.00	1.00	1.00	1.00
Incremental Delay, d2	0.5		0.5	0.1	0.0	0.2
Delay (s)	13.2		17.6	5.1	15.5	16.1
Level of Service	B		B	A	B	B
Approach Delay (s)	13.2			7.7	16.0	
Approach LOS	B			A	B	

Intersection Summary			
HCM 2000 Control Delay	11.8	HCM 2000 Level of Service	B
HCM 2000 Volume to Capacity ratio	0.49		
Actuated Cycle Length (s)	44.0	Sum of lost time (s)	16.5
Intersection Capacity Utilization	42.1%	ICU Level of Service	A
Analysis Period (min)	15		
c Critical Lane Group			

Movement	EBL	EBT	EBR	WBL	WBT	WBR	NBL	NBT	NBR	SBL	SBT	SBR
Lane Configurations												
Volume (vph)	1	30	45	448	50	28	27	329	275	11	178	7
Ideal Flow (vphpl)	1900	1900	1900	1900	1900	1900	1900	1900	1900	1900	1900	1900
Total Lost time (s)		4.5			4.5			4.5	4.5		4.5	
Lane Util. Factor		1.00			1.00			1.00	1.00		1.00	
Frpb, ped/bikes		0.99			1.00			1.00	0.96		1.00	
Flpb, ped/bikes		1.00			1.00			1.00	1.00		1.00	
Frt		0.92			0.99			1.00	0.85		0.99	
Flt Protected		1.00			0.96			0.99	1.00		1.00	
Satd. Flow (prot)		1530			1768			1851	1517		1833	
Flt Permitted		1.00			0.70			0.93	1.00		0.97	
Satd. Flow (perm)		1524			1283			1733	1517		1776	
Peak-hour factor, PHF	0.86	0.86	0.86	0.86	0.86	0.86	0.86	0.86	0.86	0.86	0.86	0.86
Growth Factor (vph)	120%	100%	100%	110%	100%	120%	200%	120%	112%	120%	120%	300%
Adj. Flow (vph)	1	35	52	573	58	39	63	459	358	15	248	24
RTOR Reduction (vph)	0	28	0	0	4	0	0	0	225	0	6	0
Lane Group Flow (vph)	0	60	0	0	666	0	0	522	133	0	281	0
Confl. Peds. (#/hr)	4		1	1		4	2		13	13		2
Confl. Bikes (#/hr)				2	3			2	1		1	
Parking (#/hr)		0										
Turn Type	Perm	NA		Perm	NA		Perm	NA	Perm	Perm	NA	
Protected Phases		2			6			8			4	
Permitted Phases	2			6			8		8	4		
Actuated Green, G (s)		25.5			25.5			20.5	20.5		20.5	
Effective Green, g (s)		25.5			25.5			20.5	20.5		20.5	
Actuated g/C Ratio		0.46			0.46			0.37	0.37		0.37	
Clearance Time (s)		4.5			4.5			4.5	4.5		4.5	
Vehicle Extension (s)		2.0			2.0			2.0	2.0		2.0	
Lane Grp Cap (vph)		706			594			645	565		661	
v/s Ratio Prot												
v/s Ratio Perm		0.04			c0.52			c0.30	0.09		0.16	
v/c Ratio		0.09			1.12			0.81	0.24		0.42	
Uniform Delay, d1		8.2			14.8			15.5	11.9		12.9	
Progression Factor		1.00			1.00			1.00	1.00		1.00	
Incremental Delay, d2		0.0			74.8			10.5	1.0		2.0	
Delay (s)		8.3			89.5			26.0	12.8		14.9	
Level of Service		A			F			C	B		B	
Approach Delay (s)		8.3			89.5			20.7			14.9	
Approach LOS		A			F			C			B	

Intersection Summary			
HCM 2000 Control Delay	43.2	HCM 2000 Level of Service	D
HCM 2000 Volume to Capacity ratio	0.98		
Actuated Cycle Length (s)	55.0	Sum of lost time (s)	9.0
Intersection Capacity Utilization	85.7%	ICU Level of Service	E
Analysis Period (min)	15		
c Critical Lane Group			

Movement	EBL	EBT	EBR	WBL	WBT	WBR	NBL	NBT	NBR	SBL	SBT	SBR
Lane Configurations												
Volume (vph)	431	59	333	10	24	11	386	195	31	18	132	477
Ideal Flow (vphpl)	1900	1900	1900	1900	1900	1900	1900	1900	1900	1900	1900	1900
Total Lost time (s)	5.0	5.5	5.5	5.0	5.0		5.5	5.5			5.5	5.5
Lane Util. Factor	0.97	1.00	1.00	1.00	1.00		0.91	0.91			0.95	0.95
Frpb, ped/bikes	1.00	1.00	0.98	1.00	0.99		1.00	1.00			0.99	0.99
Flpb, ped/bikes	1.00	1.00	1.00	1.00	1.00		1.00	1.00			1.00	1.00
Frt	1.00	1.00	0.85	1.00	0.95		1.00	0.99			0.92	0.85
Flt Protected	0.95	1.00	1.00	0.95	1.00		0.95	0.98			1.00	1.00
Satd. Flow (prot)	3433	1863	1547	1770	1764		1610	3265			1610	1485
Flt Permitted	0.95	1.00	1.00	0.95	1.00		0.95	0.98			1.00	1.00
Satd. Flow (perm)	3433	1863	1547	1770	1764		1610	3265			1610	1485
Peak-hour factor, PHF	0.93	0.93	0.93	0.93	0.93	0.93	0.93	0.93	0.93	0.93	0.93	0.93
Growth Factor (vph)	120%	120%	120%	120%	120%	120%	120%	120%	120%	120%	120%	120%
Adj. Flow (vph)	556	76	430	13	31	14	498	252	40	23	170	615
RTOR Reduction (vph)	0	0	325	0	13	0	0	6	0	0	36	275
Lane Group Flow (vph)	556	76	105	13	32	0	259	525	0	0	385	112
Confl. Peds. (#/hr)						5			12			
Confl. Bikes (#/hr)			2			1		5	1	1	1	1
Turn Type	Prot	NA	Perm	Prot	NA		Split	NA		Split	NA	Perm
Protected Phases	7	4		3	8		2	2		6	6	
Permitted Phases			4									6
Actuated Green, G (s)	15.4	21.3	21.3	0.7	7.1		18.4	18.4			25.1	25.1
Effective Green, g (s)	15.4	21.3	21.3	0.7	7.1		18.4	18.4			25.1	25.1
Actuated g/C Ratio	0.18	0.24	0.24	0.01	0.08		0.21	0.21			0.29	0.29
Clearance Time (s)	5.0	5.5	5.5	5.0	5.0		5.5	5.5			5.5	5.5
Vehicle Extension (s)	2.0	2.0	2.0	2.0	2.0		2.0	2.0			2.0	2.0
Lane Grp Cap (vph)	607	456	378	14	143		340	690			464	428
v/s Ratio Prot	c0.16	0.04		0.01	0.02		0.16	c0.16			c0.24	
v/s Ratio Perm			c0.07									0.08
v/c Ratio	0.92	0.17	0.28	0.93	0.22		0.76	0.76			0.83	0.26
Uniform Delay, d1	35.2	25.9	26.6	43.1	37.4		32.2	32.2			29.0	23.8
Progression Factor	1.00	1.00	1.00	1.00	1.00		1.00	1.00			1.00	1.00
Incremental Delay, d2	18.3	0.1	0.1	199.0	0.3		8.8	4.5			11.5	0.1
Delay (s)	53.4	25.9	26.8	242.1	37.7		41.0	36.7			40.4	23.9
Level of Service	D	C	C	F	D		D	D			D	C
Approach Delay (s)		40.7			83.5			38.1			32.5	
Approach LOS		D			F			D			C	

Intersection Summary			
HCM 2000 Control Delay	38.4	HCM 2000 Level of Service	D
HCM 2000 Volume to Capacity ratio	0.79		
Actuated Cycle Length (s)	87.0	Sum of lost time (s)	21.5
Intersection Capacity Utilization	70.5%	ICU Level of Service	C
Analysis Period (min)	15		

c Critical Lane Group

Movement	EBL	EBT	EBR	WBL	WBT	WBR	NBL	NBT	NBR	SBL	SBT	SBR
Lane Configurations												
Volume (vph)	50	10	50	63	4	13	13	647	17	4	368	39
Ideal Flow (vphpl)	1900	1900	1900	1900	1900	1900	1900	1900	1900	1900	1900	1900
Total Lost time (s)		4.9			4.9		4.4	4.9		4.4	4.9	
Lane Util. Factor		1.00			1.00		1.00	1.00		1.00	1.00	
Frpb, ped/bikes		0.99			0.99		1.00	1.00		1.00	1.00	
Flpb, ped/bikes		1.00			1.00		1.00	1.00		1.00	1.00	
Frt		0.94			0.98		1.00	1.00		1.00	0.98	
Flt Protected		0.98			0.96		0.95	1.00		0.95	1.00	
Satd. Flow (prot)		1683			1737		1765	1854		1767	1809	
Flt Permitted		0.85			0.77		0.95	1.00		0.95	1.00	
Satd. Flow (perm)		1455			1398		1765	1854		1767	1809	
Peak-hour factor, PHF	0.91	0.91	0.91	0.91	0.91	0.91	0.91	0.91	0.91	0.91	0.91	0.91
Growth Factor (vph)	100%	100%	100%	110%	120%	110%	110%	110%	110%	250%	110%	205%
Adj. Flow (vph)	55	11	55	76	5	16	16	782	21	11	445	88
RTOR Reduction (vph)	0	47	0	0	14	0	0	1	0	0	8	0
Lane Group Flow (vph)	0	75	0	0	83	0	16	802	0	11	525	0
Confl. Peds. (#/hr)	7		4	4		7	3		2	2		3
Confl. Bikes (#/hr)	1	4			2							
Turn Type	Perm	NA		Perm	NA		Prot	NA		Prot	NA	
Protected Phases		4			8		5	2		1	6	
Permitted Phases	4			8								
Actuated Green, G (s)		8.5			8.5		0.8	31.5		0.8	31.5	
Effective Green, g (s)		8.5			8.5		0.8	31.5		0.8	31.5	
Actuated g/C Ratio		0.15			0.15		0.01	0.57		0.01	0.57	
Clearance Time (s)		4.9			4.9		4.4	4.9		4.4	4.9	
Vehicle Extension (s)		2.0			2.0		2.0	2.0		2.0	2.0	
Lane Grp Cap (vph)		224			216		25	1061		25	1036	
v/s Ratio Prot							c0.01	c0.43		0.01	0.29	
v/s Ratio Perm		0.05			c0.06							
v/c Ratio		0.33			0.39		0.64	0.76		0.44	0.51	
Uniform Delay, d1		20.7			20.9		27.0	8.9		26.9	7.1	
Progression Factor		1.00			1.00		1.00	1.00		1.00	1.00	
Incremental Delay, d2		0.3			0.4		35.0	5.0		4.4	1.8	
Delay (s)		21.0			21.3		61.9	13.9		31.3	8.8	
Level of Service		C			C		E	B		C	A	
Approach Delay (s)		21.0			21.3			14.8			9.3	
Approach LOS		C			C			B			A	

Intersection Summary			
HCM 2000 Control Delay	13.8	HCM 2000 Level of Service	B
HCM 2000 Volume to Capacity ratio	0.68		
Actuated Cycle Length (s)	55.0	Sum of lost time (s)	14.2
Intersection Capacity Utilization	56.5%	ICU Level of Service	B
Analysis Period (min)	15		

c Critical Lane Group

Movement	NBT	NBR	SBL	SBT	SWL	SWR
Lane Configurations						
Volume (vph)	582	697	15	355	458	4
Ideal Flow (vphpl)	1900	1900	1900	1900	1900	1900
Lane Width	11	11	11	11	11	11
Total Lost time (s)	5.0	5.0	5.0	5.0	5.0	5.0
Lane Util. Factor	1.00	1.00	1.00	1.00	1.00	1.00
Frpb, ped/bikes	1.00	1.00	1.00	1.00	1.00	0.99
Flpb, ped/bikes	1.00	1.00	1.00	1.00	1.00	1.00
Frt	1.00	0.85	1.00	1.00	1.00	0.85
Flt Protected	1.00	1.00	0.95	1.00	0.95	1.00
Satd. Flow (prot)	1801	1531	1711	1801	1711	1511
Flt Permitted	1.00	1.00	0.20	1.00	0.95	1.00
Satd. Flow (perm)	1801	1531	364	1801	1711	1511
Peak-hour factor, PHF	0.89	0.89	0.89	0.89	0.89	0.89
Growth Factor (vph)	106%	106%	100%	106%	106%	300%
Adj. Flow (vph)	693	830	17	423	545	13
RTOR Reduction (vph)	0	429	0	0	0	8
Lane Group Flow (vph)	693	401	17	423	545	5
Confl. Peds. (#/hr)		2				1
Confl. Bikes (#/hr)		10		8	2	
Turn Type	NA	Prot	Perm	NA	Prot	Perm
Protected Phases	2	2		6	4	
Permitted Phases			6			4
Actuated Green, G (s)	29.0	29.0	29.0	29.0	21.0	21.0
Effective Green, g (s)	29.0	29.0	29.0	29.0	21.0	21.0
Actuated g/C Ratio	0.48	0.48	0.48	0.48	0.35	0.35
Clearance Time (s)	5.0	5.0	5.0	5.0	5.0	5.0
Vehicle Extension (s)	2.0	2.0	2.0	2.0	2.0	2.0
Lane Grp Cap (vph)	870	739	175	870	598	528
v/s Ratio Prot	c0.38	0.26		0.23	c0.32	
v/s Ratio Perm			0.05			0.00
v/c Ratio	0.80	0.54	0.10	0.49	0.91	0.01
Uniform Delay, d1	13.0	10.9	8.4	10.5	18.6	12.7
Progression Factor	0.99	2.44	1.00	1.00	1.00	1.00
Incremental Delay, d2	5.9	2.2	0.1	0.2	17.9	0.0
Delay (s)	18.9	28.7	8.5	10.6	36.5	12.7
Level of Service	B	C	A	B	D	B
Approach Delay (s)	24.2			10.5	36.0	
Approach LOS	C			B	D	

Intersection Summary			
HCM 2000 Control Delay	24.4	HCM 2000 Level of Service	C
HCM 2000 Volume to Capacity ratio	0.84		
Actuated Cycle Length (s)	60.0	Sum of lost time (s)	10.0
Intersection Capacity Utilization	67.7%	ICU Level of Service	C
Analysis Period (min)	15		
c Critical Lane Group			

Movement	EBL	EBT	EBR	WBL	WBT	WBR	NBL	NBT	NBR	SBL	SBT	SBR
Lane Configurations												
Volume (vph)	3	1	0	3	4	5	14	458	8	10	362	10
Ideal Flow (vphpl)	1900	1900	1900	1900	1900	1900	1900	1900	1900	1900	1900	1900
Lane Width	12	12	12	12	12	12	10	10	10	10	12	10
Total Lost time (s)		5.5			5.5		5.5	5.5		5.5	5.5	
Lane Util. Factor		1.00			1.00		1.00	0.95		1.00	1.00	
Frpb, ped/bikes		1.00			1.00		1.00	1.00		1.00	1.00	
Flpb, ped/bikes		1.00			1.00		1.00	1.00		1.00	1.00	
Frt		1.00			0.93		1.00	1.00		1.00	0.99	
Flt Protected		0.96			0.98		0.95	1.00		0.95	1.00	
Satd. Flow (prot)		1794			1710		1652	3290		1652	1848	
Flt Permitted		1.00			1.00		0.95	1.00		0.95	1.00	
Satd. Flow (perm)		1863			1737		1652	3290		1652	1848	
Peak-hour factor, PHF	0.92	0.92	0.92	0.92	0.92	0.92	0.92	0.92	0.92	0.92	0.92	0.92
Growth Factor (vph)	300%	300%	200%	200%	100%	200%	200%	123%	200%	200%	120%	200%
Adj. Flow (vph)	10	3	0	7	4	11	30	612	17	22	472	22
RTOR Reduction (vph)	0	0	0	0	11	0	0	1	0	0	1	0
Lane Group Flow (vph)	0	13	0	0	11	0	30	628	0	22	493	0
Confl. Bikes (#/hr)								7			8	3
Turn Type	Perm	NA		Perm	NA		Prot	NA		Prot	NA	
Protected Phases		4			8		5	2		1	6	
Permitted Phases	4			8								
Actuated Green, G (s)		0.9			0.9		3.0	28.8		1.0	26.8	
Effective Green, g (s)		0.9			0.9		3.0	28.8		1.0	26.8	
Actuated g/C Ratio		0.02			0.02		0.06	0.61		0.02	0.57	
Clearance Time (s)		5.5			5.5		5.5	5.5		5.5	5.5	
Vehicle Extension (s)		2.0			2.0		2.0	2.0		2.0	2.0	
Lane Grp Cap (vph)		35			33		105	2007		35	1049	
v/s Ratio Prot							0.02	c0.19		0.01	c0.27	
v/s Ratio Perm		c0.01			0.01							
v/c Ratio		0.37			0.34		0.29	0.31		0.63	0.47	
Uniform Delay, d1		22.9			22.9		21.1	4.4		22.9	6.0	
Progression Factor		1.00			1.00		1.00	1.00		1.00	1.00	
Incremental Delay, d2		2.4			2.2		0.5	0.0		22.7	0.1	
Delay (s)		25.3			25.1		21.6	4.5		45.6	6.1	
Level of Service		C			C		C	A		D	A	
Approach Delay (s)		25.3			25.1			5.2			7.8	
Approach LOS		C			C			A			A	

Intersection Summary			
HCM 2000 Control Delay	6.9	HCM 2000 Level of Service	A
HCM 2000 Volume to Capacity ratio	0.48		
Actuated Cycle Length (s)	47.2	Sum of lost time (s)	16.5
Intersection Capacity Utilization	36.6%	ICU Level of Service	A
Analysis Period (min)	15		

c Critical Lane Group

Movement	EBL	EBT	EBR	WBL	WBT	WBR	NBL	NBT	NBR	SBL	SBT	SBR
Lane Configurations												
Volume (vph)	80	50	20	11	25	8	94	473	40	20	335	50
Ideal Flow (vphpl)	1900	1900	1900	1900	1900	1900	1900	1900	1900	1900	1900	1900
Lane Width	11	11	12	12	12	12	10	10	10	10	10	10
Total Lost time (s)	4.9	4.9	4.9	4.9	4.9		4.4	4.9		4.4	4.9	
Lane Util. Factor	1.00	1.00	1.00	1.00	1.00		1.00	0.95		1.00	1.00	
Frpb, ped/bikes	1.00	1.00	0.99	1.00	1.00		1.00	1.00		1.00	1.00	
Flpb, ped/bikes	1.00	1.00	1.00	1.00	1.00		1.00	1.00		1.00	1.00	
Frt	1.00	1.00	0.85	1.00	0.95		1.00	0.99		1.00	0.98	
Flt Protected	0.95	1.00	1.00	0.95	1.00		0.95	1.00		0.95	1.00	
Satd. Flow (prot)	1711	1621	1561	1766	1773		1652	3099		1652	1702	
Flt Permitted	0.70	1.00	1.00	0.72	1.00		0.95	1.00		0.95	1.00	
Satd. Flow (perm)	1265	1621	1561	1338	1773		1652	3099		1652	1702	
Peak-hour factor, PHF	0.88	0.88	0.88	0.88	0.88	0.88	0.88	0.88	0.88	0.88	0.88	0.88
Growth Factor (vph)	100%	100%	100%	180%	200%	300%	106%	106%	100%	100%	106%	100%
Adj. Flow (vph)	91	57	23	22	57	27	113	570	45	23	404	57
RTOR Reduction (vph)	0	0	20	0	22	0	0	3	0	0	4	0
Lane Group Flow (vph)	91	57	3	22	62	0	113	612	0	23	457	0
Confl. Peds. (#/hr)			3	3			1		1	1		1
Confl. Bikes (#/hr)								1			7	1
Parking (#/hr)		0						0				
Turn Type	Perm	NA	Perm	Perm	NA		Prot	NA		Prot	NA	
Protected Phases		4			8		5	2		1	6	
Permitted Phases	4		4	8								
Actuated Green, G (s)	10.9	10.9	10.9	10.9	10.9		7.9	47.9		2.4	42.4	
Effective Green, g (s)	10.9	10.9	10.9	10.9	10.9		7.9	47.9		2.4	42.4	
Actuated g/C Ratio	0.14	0.14	0.14	0.14	0.14		0.10	0.64		0.03	0.56	
Clearance Time (s)	4.9	4.9	4.9	4.9	4.9		4.4	4.9		4.4	4.9	
Vehicle Extension (s)	2.0	2.0	2.0	2.0	2.0		2.0	3.6		2.0	4.3	
Lane Grp Cap (vph)	182	234	225	193	256		173	1968		52	957	
v/s Ratio Prot		0.04			0.03		c0.07	0.20		0.01	c0.27	
v/s Ratio Perm	c0.07		0.00	0.02								
v/c Ratio	0.50	0.24	0.01	0.11	0.24		0.65	0.31		0.44	0.48	
Uniform Delay, d1	29.7	28.6	27.6	28.1	28.6		32.4	6.2		35.8	9.9	
Progression Factor	1.00	1.00	1.00	1.00	1.00		1.00	1.00		1.00	1.00	
Incremental Delay, d2	0.8	0.2	0.0	0.1	0.2		6.6	0.4		2.2	1.7	
Delay (s)	30.5	28.8	27.7	28.1	28.8		39.0	6.7		38.0	11.6	
Level of Service	C	C	C	C	C		D	A		D	B	
Approach Delay (s)		29.6			28.6			11.7			12.8	
Approach LOS		C			C			B			B	

Intersection Summary			
HCM 2000 Control Delay	15.3	HCM 2000 Level of Service	B
HCM 2000 Volume to Capacity ratio	0.50		
Actuated Cycle Length (s)	75.4	Sum of lost time (s)	14.2
Intersection Capacity Utilization	51.9%	ICU Level of Service	A
Analysis Period (min)	15		

c Critical Lane Group

Movement	EBL	EBR	EBR2	NBL	NBT	NBR	SBL	SBT	SBR	NWL2	NWL	NWR
Lane Configurations												
Volume (vph)	50	100	70	130	678	10	0	779	45	4	60	557
Ideal Flow (vphpl)	1900	1900	1900	1900	1900	1900	1900	1900	1900	1900	1900	1900
Lane Width	12	12	12	12	12	12	11	11	11	12	12	12
Total Lost time (s)	4.9		4.9	4.4	5.3			5.3			4.9	4.9
Lane Util. Factor	1.00		1.00	1.00	1.00			0.95			1.00	0.95
Frpb, ped/bikes	1.00		0.98	1.00	1.00			1.00			1.00	1.00
Flpb, ped/bikes	1.00		1.00	1.00	1.00			1.00			1.00	1.00
Frt	0.90		0.85	1.00	1.00			0.99			0.88	0.85
Flt Protected	0.98		1.00	0.95	1.00			1.00			0.99	1.00
Satd. Flow (prot)	1484		1544	1770	1853			3369			1616	1504
Flt Permitted	0.53		1.00	0.95	1.00			1.00			0.99	1.00
Satd. Flow (perm)	795		1544	1770	1853			3369			1616	1504
Peak-hour factor, PHF	0.92	0.92	0.92	0.92	0.92	0.92	0.92	0.92	0.92	0.92	0.92	0.92
Growth Factor (vph)	100%	100%	100%	150%	106%	190%	106%	101%	167%	120%	100%	106%
Adj. Flow (vph)	54	109	76	212	781	21	0	855	82	5	65	642
RTOR Reduction (vph)	0	0	58	0	1	0	0	12	0	0	93	93
Lane Group Flow (vph)	163	0	18	212	801	0	0	925	0	0	266	260
Confl. Peds. (#/hr)			16	5		15			5	16		
Confl. Bikes (#/hr)					2	2	7	7			3	
Parking (#/hr)	0											
Turn Type	Perm		Perm	Prot	NA			NA		Perm	Prot	Perm
Protected Phases				5	2			6			8	
Permitted Phases	4		4							8		8
Actuated Green, G (s)	14.5		14.5	8.6	35.3			22.3			14.5	14.5
Effective Green, g (s)	14.5		14.5	8.6	35.3			22.3			14.5	14.5
Actuated g/C Ratio	0.24		0.24	0.14	0.59			0.37			0.24	0.24
Clearance Time (s)	4.9		4.9	4.4	5.3			5.3			4.9	4.9
Vehicle Extension (s)	2.0		2.0	2.0	2.0			2.0			2.0	2.0
Lane Grp Cap (vph)	192		373	253	1090			1252			390	363
v/s Ratio Prot				0.12	c0.43			0.27				
v/s Ratio Perm	c0.20		0.01								0.16	0.17
v/c Ratio	0.85		0.05	0.84	0.73			0.74			0.68	0.72
Uniform Delay, d1	21.7		17.5	25.0	9.0			16.3			20.7	20.9
Progression Factor	1.00		1.00	1.64	1.48			0.88			1.00	1.00
Incremental Delay, d2	26.9		0.0	2.2	0.4			1.4			3.9	5.6
Delay (s)	48.6		17.5	43.2	13.7			15.7			24.6	26.4
Level of Service	D		B	D	B			B			C	C
Approach Delay (s)	38.7				19.8			15.7			25.5	
Approach LOS	D				B			B			C	

Intersection Summary			
HCM 2000 Control Delay	21.5	HCM 2000 Level of Service	C
HCM 2000 Volume to Capacity ratio	0.84		
Actuated Cycle Length (s)	60.0	Sum of lost time (s)	14.6
Intersection Capacity Utilization	80.8%	ICU Level of Service	D
Analysis Period (min)	15		

c Critical Lane Group

Movement	WBL	WBR	NBT	NBR	SBL	SBT
Lane Configurations						
Volume (vph)	705	0	880	784	429	384
Ideal Flow (vphpl)	1900	1900	1900	1900	1900	1900
Lane Width	12	12	12	12	11	11
Total Lost time (s)	5.0		5.0	5.0	5.0	5.0
Lane Util. Factor	0.97		1.00	1.00	0.97	0.95
Frpb, ped/bikes	1.00		1.00	1.00	1.00	1.00
Flpb, ped/bikes	1.00		1.00	1.00	1.00	1.00
Frt	1.00		1.00	0.85	1.00	1.00
Flt Protected	0.95		1.00	1.00	0.95	1.00
Satd. Flow (prot)	3090		1676	1425	2987	3079
Flt Permitted	0.95		1.00	1.00	0.95	1.00
Satd. Flow (perm)	3090		1676	1425	2987	3079
Peak-hour factor, PHF	0.89	0.89	0.89	0.89	0.89	0.89
Growth Factor (vph)	106%	106%	106%	106%	106%	106%
Adj. Flow (vph)	840	0	1048	934	511	457
RTOR Reduction (vph)	0	0	0	2	0	0
Lane Group Flow (vph)	840	0	1048	932	511	457
Confl. Bikes (#/hr)			2	6	8	
Turn Type	Prot		NA	pt+ov	Prot	NA
Protected Phases	8		2	2 8	1	6
Permitted Phases						
Actuated Green, G (s)	29.0		59.0	93.0	17.0	81.0
Effective Green, g (s)	29.0		59.0	93.0	17.0	81.0
Actuated g/C Ratio	0.24		0.49	0.78	0.14	0.68
Clearance Time (s)	5.0		5.0		5.0	5.0
Vehicle Extension (s)	3.6		3.9		2.0	4.7
Lane Grp Cap (vph)	746		824	1104	423	2078
v/s Ratio Prot	c0.27		c0.63	0.65	c0.17	0.15
v/s Ratio Perm						
v/c Ratio	1.13		1.27	0.84	1.21	0.22
Uniform Delay, d1	45.5		30.5	8.8	51.5	7.4
Progression Factor	1.00		1.00	1.00	1.00	1.13
Incremental Delay, d2	73.4		131.8	8.0	109.3	0.1
Delay (s)	118.9		162.3	16.7	160.8	8.5
Level of Service	F		F	B	F	A
Approach Delay (s)	118.9		93.7			88.9
Approach LOS	F		F			F

Intersection Summary			
HCM 2000 Control Delay	98.1	HCM 2000 Level of Service	F
HCM 2000 Volume to Capacity ratio	1.22		
Actuated Cycle Length (s)	120.0	Sum of lost time (s)	15.0
Intersection Capacity Utilization	105.2%	ICU Level of Service	G
Analysis Period (min)	15		

c Critical Lane Group

Movement	EBL	EBT	EBR	WBL	WBT	WBR	SEL	SET	SER	NWL	NWT	NWR
Lane Configurations												
Volume (vph)	0	1036	250	61	451	281	50	40	25	232	272	150
Ideal Flow (vphpl)	1900	1900	1900	1900	1900	1900	1900	1900	1900	1900	1900	1900
Total Lost time (s)		4.9	4.9	4.4	4.9			4.9		4.9	4.9	4.9
Lane Util. Factor		0.95	1.00	1.00	0.95			1.00		1.00	1.00	1.00
Frpb, ped/bikes		1.00	0.97	1.00	0.98			0.98		1.00	1.00	0.97
Flpb, ped/bikes		1.00	1.00	1.00	1.00			1.00		1.00	1.00	1.00
Frt		1.00	0.85	1.00	0.94			0.97		1.00	1.00	0.85
Flt Protected		1.00	1.00	0.95	1.00			0.98		0.95	1.00	1.00
Satd. Flow (prot)		3362	1518	1770	3242			1743		1770	1863	1531
Flt Permitted		1.00	1.00	0.95	1.00			0.70		0.95	1.00	1.00
Satd. Flow (perm)		3362	1518	1770	3242			1254		1770	1863	1531
Peak-hour factor, PHF	0.84	0.84	0.84	0.84	0.84	0.84	0.84	0.84	0.84	0.84	0.84	0.84
Growth Factor (vph)	106%	100%	100%	110%	108%	130%	100%	100%	100%	102%	106%	140%
Adj. Flow (vph)	0	1233	298	80	580	435	60	48	30	282	343	250
RTOR Reduction (vph)	0	0	141	0	151	0	0	13	0	0	0	106
Lane Group Flow (vph)	0	1233	157	80	864	0	0	125	0	282	343	144
Confl. Peds. (#/hr)			26			19			42			16
Bus Blockages (#/hr)	0	0	4	0	0	0	0	0	0	0	0	0
Parking (#/hr)		0										
Turn Type		NA	pm+ov	Prot	NA		Perm	NA		Prot	NA	Perm
Protected Phases		2	3	1	6			4		3	8	
Permitted Phases			2				4					8
Actuated Green, G (s)		28.2	42.1	5.4	38.0			13.4		13.9	32.2	32.2
Effective Green, g (s)		28.2	42.1	5.4	38.0			13.4		13.9	32.2	32.2
Actuated g/C Ratio		0.35	0.53	0.07	0.48			0.17		0.17	0.40	0.40
Clearance Time (s)		4.9	4.9	4.4	4.9			4.9		4.9	4.9	4.9
Vehicle Extension (s)		2.0	2.0	2.0	2.0			2.0		2.0	2.0	2.0
Lane Grp Cap (vph)		1185	891	119	1539			210		307	749	616
v/s Ratio Prot		c0.37	0.03	0.05	c0.27					c0.16	0.18	
v/s Ratio Perm			0.07					c0.10				0.09
v/c Ratio		1.04	0.18	0.67	0.56			0.59		0.92	0.46	0.23
Uniform Delay, d1		25.9	9.9	36.4	15.0			30.8		32.5	17.5	15.8
Progression Factor		1.00	1.00	1.00	1.00			1.00		1.00	1.00	1.00
Incremental Delay, d2		37.3	0.0	11.1	1.5			3.0		30.3	0.2	0.1
Delay (s)		63.2	9.9	47.6	16.5			33.8		62.8	17.7	15.8
Level of Service		E	A	D	B			C		E	B	B
Approach Delay (s)		52.8			18.8			33.8			31.7	
Approach LOS		D			B			C			C	

Intersection Summary			
HCM 2000 Control Delay	36.8	HCM 2000 Level of Service	D
HCM 2000 Volume to Capacity ratio	0.89		
Actuated Cycle Length (s)	80.0	Sum of lost time (s)	19.1
Intersection Capacity Utilization	76.2%	ICU Level of Service	D
Analysis Period (min)	15		
c Critical Lane Group			

Movement	EBL	EBT	EBR	WBL	WBT	WBR	NBL	NBT	NBR	SBL	SBT	SBR
Lane Configurations												
Volume (vph)	439	646	30	4	668	45	95	16	3	10	0	44
Ideal Flow (vphpl)	1900	1900	1900	1900	1900	1900	1900	1900	1900	1900	1900	1900
Total Lost time (s)	4.4	4.9		4.4	5.6			4.9			4.9	4.4
Lane Util. Factor	1.00	0.95		1.00	0.95			1.00			1.00	1.00
Frpb, ped/bikes	1.00	1.00		1.00	1.00			1.00			1.00	0.99
Flpb, ped/bikes	1.00	1.00		1.00	1.00			0.99			1.00	1.00
Frt	1.00	0.99		1.00	0.99			1.00			1.00	0.85
Flt Protected	0.95	1.00		0.95	1.00			0.96			0.95	1.00
Satd. Flow (prot)	1770	3517		1770	3501			1770			1766	1573
Flt Permitted	0.95	1.00		0.95	1.00			0.76			0.73	1.00
Satd. Flow (perm)	1770	3517		1770	3501			1397			1348	1573
Peak-hour factor, PHF	0.84	0.84	0.84	0.84	0.84	0.84	0.84	0.84	0.84	0.84	0.84	0.84
Growth Factor (vph)	102%	130%	102%	200%	125%	130%	106%	130%	130%	130%	130%	106%
Adj. Flow (vph)	533	1000	36	10	994	70	120	25	5	15	0	56
RTOR Reduction (vph)	0	2	0	0	5	0	0	2	0	0	0	14
Lane Group Flow (vph)	533	1034	0	10	1059	0	0	148	0	0	15	42
Confl. Peds. (#/hr)	2		4	4		2	8		3	3		8
Confl. Bikes (#/hr)		9	1		6		1	21	1			
Turn Type	Prot	NA		Prot	NA		Perm	NA		Perm	NA	pm+ov
Protected Phases	7	4		3	8			2			6	7
Permitted Phases							2			6		6
Actuated Green, G (s)	29.6	60.7		1.0	31.4			14.3			14.3	43.9
Effective Green, g (s)	29.6	60.7		1.0	31.4			14.3			14.3	43.9
Actuated g/C Ratio	0.33	0.67		0.01	0.35			0.16			0.16	0.49
Clearance Time (s)	4.4	4.9		4.4	5.6			4.9			4.9	4.4
Vehicle Extension (s)	2.0	2.0		2.0	2.0			2.0			2.0	2.0
Lane Grp Cap (vph)	580	2366		19	1218			221			213	765
v/s Ratio Prot	c0.30	0.29		0.01	c0.30							0.02
v/s Ratio Perm								c0.11			0.01	0.01
v/c Ratio	0.92	0.44		0.53	0.87			0.67			0.07	0.05
Uniform Delay, d1	29.1	6.8		44.4	27.5			35.7			32.3	12.2
Progression Factor	1.00	1.00		1.00	1.00			1.00			1.00	1.00
Incremental Delay, d2	19.3	0.0		11.6	6.6			6.2			0.1	0.0
Delay (s)	48.4	6.9		55.9	34.1			41.9			32.3	12.2
Level of Service	D	A		E	C			D			C	B
Approach Delay (s)		21.0			34.3			41.9			16.5	
Approach LOS		C			C			D			B	

Intersection Summary			
HCM 2000 Control Delay	27.0	HCM 2000 Level of Service	C
HCM 2000 Volume to Capacity ratio	0.85		
Actuated Cycle Length (s)	90.2	Sum of lost time (s)	14.9
Intersection Capacity Utilization	76.5%	ICU Level of Service	D
Analysis Period (min)	15		

c Critical Lane Group

Movement	EBL	EBT	EBR	WBL	WBT	WBR	SEL	SET	SER	NWL	NWT	NWR
Lane Configurations												
Volume (vph)	99	12	28	3	6	16	53	227	69	54	555	43
Ideal Flow (vphpl)	1900	1900	1900	1900	1900	1900	1900	1900	1900	1900	1900	1900
Total Lost time (s)		5.0			5.0		5.0	5.0		5.0	5.0	
Lane Util. Factor		1.00			1.00		1.00	0.95		1.00	0.95	
Frpb, ped/bikes		0.99			0.99		1.00	0.99		1.00	1.00	
Flpb, ped/bikes		1.00			1.00		1.00	1.00		1.00	1.00	
Frt		0.96			0.93		1.00	0.97		1.00	0.99	
Flt Protected		0.97			0.99		0.95	1.00		0.95	1.00	
Satd. Flow (prot)		1721			1708		1770	3387		1770	3492	
Flt Permitted		0.78			0.93		0.95	1.00		0.95	1.00	
Satd. Flow (perm)		1385			1606		1770	3387		1770	3492	
Peak-hour factor, PHF	0.85	0.85	0.85	0.85	0.85	0.85	0.85	0.85	0.85	0.85	0.85	0.85
Growth Factor (vph)	100%	100%	150%	200%	200%	106%	106%	106%	106%	110%	110%	110%
Adj. Flow (vph)	116	14	49	7	14	20	66	283	86	70	718	56
RTOR Reduction (vph)	0	34	0	0	16	0	0	41	0	0	9	0
Lane Group Flow (vph)	0	145	0	0	25	0	66	328	0	70	765	0
Confl. Peds. (#/hr)	10		10	10		10	10		10	10		10
Turn Type	Perm	NA		Perm	NA		Prot	NA		Prot	NA	
Protected Phases		4			8		1			5	2	
Permitted Phases	4			8				6				
Actuated Green, G (s)		10.5			10.5		6.5	23.3		6.2	23.0	
Effective Green, g (s)		10.5			10.5		6.5	23.3		6.2	23.0	
Actuated g/C Ratio		0.19			0.19		0.12	0.42		0.11	0.42	
Clearance Time (s)		5.0			5.0		5.0	5.0		5.0	5.0	
Vehicle Extension (s)		2.0			2.0		2.0	2.0		2.0	2.0	
Lane Grp Cap (vph)		264			306		209	1434		199	1460	
v/s Ratio Prot							0.04			c0.04	c0.22	
v/s Ratio Perm		c0.10			0.02			0.10				
v/c Ratio		0.55			0.08		0.32	0.23		0.35	0.52	
Uniform Delay, d1		20.1			18.3		22.2	10.1		22.5	11.9	
Progression Factor		1.00			1.00		1.00	1.00		1.00	1.00	
Incremental Delay, d2		1.3			0.0		0.3	0.4		0.4	1.3	
Delay (s)		21.4			18.3		22.5	10.5		22.9	13.3	
Level of Service		C			B		C	B		C	B	
Approach Delay (s)		21.4			18.3			12.3			14.1	
Approach LOS		C			B			B			B	

Intersection Summary			
HCM 2000 Control Delay	14.5	HCM 2000 Level of Service	B
HCM 2000 Volume to Capacity ratio	0.50		
Actuated Cycle Length (s)	55.0	Sum of lost time (s)	15.0
Intersection Capacity Utilization	50.9%	ICU Level of Service	A
Analysis Period (min)	15		
c Critical Lane Group			

Movement	EBL	EBT	WBT	WBR	SBL	SBR
Lane Configurations						
Volume (vph)	285	340	285	347	192	35
Ideal Flow (vphpl)	1900	1900	1900	1900	1900	1900
Total Lost time (s)	4.4	6.0	5.6	5.6	4.9	4.9
Lane Util. Factor	1.00	0.95	0.95	1.00	0.97	0.91
Frpb, ped/bikes	1.00	1.00	1.00	0.95	1.00	0.98
Flpb, ped/bikes	1.00	1.00	1.00	1.00	0.98	1.00
Frt	1.00	1.00	1.00	0.85	1.00	0.85
Flt Protected	0.95	1.00	1.00	1.00	0.95	1.00
Satd. Flow (prot)	1593	3185	3185	1347	3039	1277
Flt Permitted	0.95	1.00	1.00	1.00	0.95	1.00
Satd. Flow (perm)	1593	3185	3185	1347	3039	1277
Peak-hour factor, PHF	0.78	0.78	0.78	0.78	0.78	0.78
Growth Factor (vph)	142%	160%	160%	142%	142%	142%
Adj. Flow (vph)	519	697	585	632	350	64
RTOR Reduction (vph)	0	0	0	410	2	46
Lane Group Flow (vph)	519	697	585	222	354	12
Confl. Peds. (#/hr)				23	10	
Confl. Bikes (#/hr)	5		3		2	3
Turn Type	Prot	NA	NA	Perm	Perm	Perm
Protected Phases	7	4	8			
Permitted Phases				8	6	6
Actuated Green, G (s)	25.8	54.5	24.7	24.7	17.2	17.2
Effective Green, g (s)	25.8	54.5	24.7	24.7	17.2	17.2
Actuated g/C Ratio	0.31	0.66	0.30	0.30	0.21	0.21
Clearance Time (s)	4.4	6.0	5.6	5.6	4.9	4.9
Vehicle Extension (s)	2.0	4.6	4.2	4.2	5.0	5.0
Lane Grp Cap (vph)	497	2101	952	402	632	265
v/s Ratio Prot	c0.33	0.22	c0.18			
v/s Ratio Perm				0.16	c0.12	0.01
v/c Ratio	1.04	0.33	0.61	0.55	0.56	0.05
Uniform Delay, d1	28.4	6.1	24.9	24.3	29.3	26.1
Progression Factor	1.00	1.00	1.00	1.00	1.00	1.00
Incremental Delay, d2	52.4	0.2	1.4	2.2	1.9	0.1
Delay (s)	80.8	6.3	26.3	26.5	31.2	26.3
Level of Service	F	A	C	C	C	C
Approach Delay (s)		38.1	26.4		30.5	
Approach LOS		D	C		C	

Intersection Summary			
HCM 2000 Control Delay	32.0	HCM 2000 Level of Service	C
HCM 2000 Volume to Capacity ratio	0.76		
Actuated Cycle Length (s)	82.6	Sum of lost time (s)	14.9
Intersection Capacity Utilization	69.3%	ICU Level of Service	C
Analysis Period (min)	15		

c Critical Lane Group

Movement	EBL	EBT	EBR	WBL	WBT	WBR	NBL	NBT	NBR	SBL	SBT	SBR
Lane Configurations												
Volume (vph)	45	405	5	8	694	52	40	3	48	60	4	34
Ideal Flow (vphpl)	1900	1900	1900	1900	1900	1900	1900	1900	1900	1900	1900	1900
Total Lost time (s)	4.4	5.7		4.4	6.0			4.9	4.9		4.9	4.9
Lane Util. Factor	1.00	0.95		1.00	0.95			1.00	1.00		1.00	1.00
Frpb, ped/bikes	1.00	1.00		1.00	1.00			1.00	1.00		1.00	0.98
Flpb, ped/bikes	1.00	1.00		0.99	1.00			1.00	1.00		1.00	1.00
Frt	1.00	1.00		1.00	0.99			1.00	0.85		1.00	0.85
Flt Protected	0.95	1.00		0.95	1.00			0.96	1.00		0.96	1.00
Satd. Flow (prot)	1770	3532		1755	3483			1771	1583		1779	1553
Flt Permitted	0.95	1.00		0.95	1.00			0.66	1.00		0.68	1.00
Satd. Flow (perm)	1770	3532		1755	3483			1224	1583		1275	1553
Peak-hour factor, PHF	0.85	0.85	0.85	0.85	0.85	0.85	0.85	0.85	0.85	0.85	0.85	0.85
Growth Factor (vph)	150%	183%	150%	150%	121%	150%	150%	150%	150%	150%	150%	150%
Adj. Flow (vph)	79	872	9	14	988	92	71	5	85	106	7	60
RTOR Reduction (vph)	0	0	0	0	5	0	0	0	69	0	0	49
Lane Group Flow (vph)	79	881	0	14	1075	0	0	76	16	0	113	11
Confl. Peds. (#/hr)	18		10	18		10	8					8
Confl. Bikes (#/hr)		7			5							1
Turn Type	Prot	NA		Prot	NA		Perm	NA	Perm	Perm	NA	Perm
Protected Phases	7	4		3	8			2			6	
Permitted Phases							2		2	6		6
Actuated Green, G (s)	4.3	30.5		0.9	26.8			10.6	10.6		10.6	10.6
Effective Green, g (s)	4.3	30.5		0.9	26.8			10.6	10.6		10.6	10.6
Actuated g/C Ratio	0.08	0.54		0.02	0.47			0.19	0.19		0.19	0.19
Clearance Time (s)	4.4	5.7		4.4	6.0			4.9	4.9		4.9	4.9
Vehicle Extension (s)	2.0	6.1		2.0	6.4			2.0	2.0		2.0	2.0
Lane Grp Cap (vph)	133	1889		27	1637			227	294		237	288
v/s Ratio Prot	c0.04	c0.25		0.01	c0.31							
v/s Ratio Perm								0.06	0.01		c0.09	0.01
v/c Ratio	0.59	0.47		0.52	0.66			0.33	0.05		0.48	0.04
Uniform Delay, d1	25.5	8.2		27.8	11.6			20.1	19.1		20.7	19.0
Progression Factor	1.00	1.00		1.00	1.00			1.00	1.00		1.00	1.00
Incremental Delay, d2	4.7	0.5		6.8	1.6			0.3	0.0		0.6	0.0
Delay (s)	30.2	8.7		34.7	13.2			20.5	19.1		21.3	19.0
Level of Service	C	A		C	B			C	B		C	B
Approach Delay (s)		10.5			13.5			19.7			20.5	
Approach LOS		B			B			B			C	

Intersection Summary			
HCM 2000 Control Delay	13.2	HCM 2000 Level of Service	B
HCM 2000 Volume to Capacity ratio	0.59		
Actuated Cycle Length (s)	57.0	Sum of lost time (s)	15.3
Intersection Capacity Utilization	55.9%	ICU Level of Service	B
Analysis Period (min)	15		

c Critical Lane Group

Movement	WBL	WBR	NBT	NBR	SBL	SBT
Lane Configurations						
Volume (veh/h)	12	15	707	34	19	403
Sign Control	Stop		Free			Free
Grade	0%		0%			0%
Peak Hour Factor	0.92	0.92	0.92	0.92	0.92	0.92
Hourly flow rate (vph)	14	18	768	41	43	442
Pedestrians			6			6
Lane Width (ft)			10.0			10.0
Walking Speed (ft/s)			4.0			4.0
Percent Blockage			0			0
Right turn flare (veh)						
Median type			None			None
Median storage veh)						
Upstream signal (ft)			1175			441
pX, platoon unblocked	0.96	0.93			0.93	
vC, conflicting volume	1324	411			809	
vC1, stage 1 conf vol						
vC2, stage 2 conf vol						
vCu, unblocked vol	1046	206			636	
tC, single (s)	6.8	6.9			4.1	
tC, 2 stage (s)						
tF (s)	3.5	3.3			2.2	
p0 queue free %	93	98			95	
cM capacity (veh/h)	203	739			874	

Direction, Lane #	WB 1	NB 1	NB 2	SB 1	SB 2
Volume Total	32	512	297	43	442
Volume Left	14	0	0	43	0
Volume Right	18	0	41	0	0
cSH	340	1700	1700	874	1700
Volume to Capacity	0.09	0.30	0.17	0.05	0.26
Queue Length 95th (ft)	8	0	0	4	0
Control Delay (s)	16.7	0.0	0.0	9.3	0.0
Lane LOS	C			A	
Approach Delay (s)	16.7	0.0		0.8	
Approach LOS	C				

Intersection Summary			
Average Delay	0.7		
Intersection Capacity Utilization	37.4%	ICU Level of Service	A
Analysis Period (min)	15		

Movement	EBL	EBT	EBR	WBL	WBT	WBR	NBL	NBT	NBR	SBL	SBT	SBR
Lane Configurations												
Sign Control		Stop			Stop			Stop			Stop	
Volume (vph)	181	17	6	3	23	70	0	168	3	12	118	106
Peak Hour Factor	0.89	0.89	0.89	0.89	0.89	0.89	0.89	0.89	0.89	0.89	0.89	0.89
Hourly flow rate (vph)	258	23	13	3	26	100	0	240	3	17	168	151

Direction, Lane #	EB 1	WB 1	NB 1	SB 1	SB 2
Volume Total (vph)	295	129	243	186	151
Volume Left (vph)	258	3	0	17	0
Volume Right (vph)	13	100	3	0	151
Hadj (s)	0.18	-0.43	0.03	0.08	-0.67
Departure Headway (s)	5.9	5.7	5.9	6.3	5.5
Degree Utilization, x	0.48	0.20	0.40	0.32	0.23
Capacity (veh/h)	572	555	564	539	610
Control Delay (s)	14.2	10.1	12.7	11.0	8.9
Approach Delay (s)	14.2	10.1	12.7	10.1	
Approach LOS	B	B	B	B	

Intersection Summary			
Delay	11.9		
Level of Service	B		
Intersection Capacity Utilization	48.4%	ICU Level of Service	A
Analysis Period (min)	15		

Movement	NBL	NBT	SBT	SBR	SEL	SER
Lane Configurations						
Volume (veh/h)	14	730	535	35	7	6
Sign Control		Free	Free		Stop	
Grade		0%	0%		0%	
Peak Hour Factor	0.87	0.87	0.87	0.87	0.87	0.87
Hourly flow rate (vph)	18	839	615	40	12	11
Pedestrians					2	
Lane Width (ft)					12.0	
Walking Speed (ft/s)					4.0	
Percent Blockage					0	
Right turn flare (veh)						
Median type		None	None			
Median storage veh)						
Upstream signal (ft)		748	779			
pX, platoon unblocked					0.67	
vC, conflicting volume	657				1512	637
vC1, stage 1 conf vol						
vC2, stage 2 conf vol						
vCu, unblocked vol	657				1517	637
tC, single (s)	4.1				6.4	6.2
tC, 2 stage (s)						
tF (s)	2.2				3.5	3.3
p0 queue free %	98				87	98
cM capacity (veh/h)	929				86	476

Direction, Lane #	NB 1	NB 2	SB 1	SE 1
Volume Total	18	839	655	23
Volume Left	18	0	0	12
Volume Right	0	0	40	11
cSH	929	1700	1700	144
Volume to Capacity	0.02	0.49	0.39	0.16
Queue Length 95th (ft)	1	0	0	14
Control Delay (s)	9.0	0.0	0.0	34.7
Lane LOS	A			D
Approach Delay (s)	0.2		0.0	34.7
Approach LOS				D

Intersection Summary			
Average Delay	0.6		
Intersection Capacity Utilization	48.4%	ICU Level of Service	A
Analysis Period (min)	15		

Movement	WBL	WBR	NBT	NBR	SBL	SBT
Lane Configurations						
Volume (vph)	28	58	384	41	123	540
Ideal Flow (vphpl)	1900	1900	1900	1900	1900	1900
Lane Width	12	12	10	10	12	12
Total Lost time (s)	5.0		5.0		5.5	5.0
Lane Util. Factor	1.00		0.95		1.00	1.00
Frpb, ped/bikes	0.99		1.00		1.00	1.00
Flpb, ped/bikes	1.00		1.00		1.00	1.00
Frt	0.91		0.99		1.00	1.00
Flt Protected	0.98		1.00		0.95	1.00
Satd. Flow (prot)	1642		3243		1770	1863
Flt Permitted	0.98		1.00		0.95	1.00
Satd. Flow (perm)	1642		3243		1770	1863
Peak-hour factor, PHF	0.92	0.92	0.92	0.92	0.92	0.92
Growth Factor (vph)	100%	100%	120%	120%	100%	100%
Adj. Flow (vph)	30	63	501	53	134	587
RTOR Reduction (vph)	57	0	5	0	0	0
Lane Group Flow (vph)	36	0	549	0	134	587
Confl. Peds. (#/hr)	10	10		10	10	
Turn Type	Prot		NA		Prot	NA
Protected Phases	8		2		1	6
Permitted Phases						
Actuated Green, G (s)	7.6		43.3		8.4	57.2
Effective Green, g (s)	7.6		43.3		8.4	57.2
Actuated g/C Ratio	0.10		0.58		0.11	0.76
Clearance Time (s)	5.0		5.0		5.5	5.0
Vehicle Extension (s)	2.0		2.0		2.0	2.0
Lane Grp Cap (vph)	166		1877		198	1424
v/s Ratio Prot	c0.02		0.17		c0.08	c0.32
v/s Ratio Perm						
v/c Ratio	0.22		0.29		0.68	0.41
Uniform Delay, d1	30.9		8.0		31.9	3.0
Progression Factor	1.00		1.00		1.00	1.00
Incremental Delay, d2	0.2		0.4		7.0	0.9
Delay (s)	31.1		8.4		38.9	3.9
Level of Service	C		A		D	A
Approach Delay (s)	31.1		8.4			10.4
Approach LOS	C		A			B

Intersection Summary			
HCM 2000 Control Delay	11.0	HCM 2000 Level of Service	B
HCM 2000 Volume to Capacity ratio	0.44		
Actuated Cycle Length (s)	74.8	Sum of lost time (s)	15.5
Intersection Capacity Utilization	46.8%	ICU Level of Service	A
Analysis Period (min)	15		

c Critical Lane Group

Movement	EBL	EBT	EBR	WBL	WBT	WBR	NBL	NBT	NBR	SBL	SBT	SBR
Lane Configurations												
Volume (vph)	97	721	0	0	663	352	117	0	787	0	0	0
Ideal Flow (vphpl)	1900	1900	1900	1900	1900	1900	1900	1900	1900	1900	1900	1900
Total Lost time (s)	5.5	5.5			5.5	5.5	5.5		5.5			
Lane Util. Factor	1.00	0.95			0.95	1.00	1.00		1.00			
Frpb, ped/bikes	1.00	1.00			1.00	1.00	1.00		0.98			
Flpb, ped/bikes	1.00	1.00			1.00	1.00	1.00		1.00			
Frt	1.00	1.00			1.00	0.85	1.00		0.85			
Flt Protected	0.95	1.00			1.00	1.00	0.95		1.00			
Satd. Flow (prot)	1593	3185			3185	1425	1593		1398			
Flt Permitted	0.95	1.00			1.00	1.00	0.95		1.00			
Satd. Flow (perm)	1593	3185			3185	1425	1593		1398			
Peak-hour factor, PHF	0.96	0.96	0.96	0.96	0.96	0.96	0.96	0.96	0.96	0.96	0.96	0.96
Growth Factor (vph)	127%	117%	127%	127%	116%	127%	127%	127%	127%	100%	100%	100%
Adj. Flow (vph)	128	879	0	0	801	466	155	0	1041	0	0	0
RTOR Reduction (vph)	0	0	0	0	0	305	0	0	0	0	0	0
Lane Group Flow (vph)	128	879	0	0	801	161	155	0	1041	0	0	0
Confl. Peds. (#/hr)	10		10	10		10	10		10	10		10
Turn Type	Prot	NA			NA	Prot	Prot		custom			
Protected Phases	7	4			8	8	2		2			
Permitted Phases									4			
Actuated Green, G (s)	8.7	40.0			25.8	25.8	23.6		63.6			
Effective Green, g (s)	8.7	40.0			25.8	25.8	23.6		63.6			
Actuated g/C Ratio	0.12	0.54			0.35	0.35	0.32		0.85			
Clearance Time (s)	5.5	5.5			5.5	5.5	5.5		5.5			
Vehicle Extension (s)	2.0	2.0			2.0	2.0	2.0		2.0			
Lane Grp Cap (vph)	185	1707			1101	492	503		1398			
v/s Ratio Prot	0.08	0.28			0.25	0.11	0.10		c0.24			
v/s Ratio Perm									0.51			
v/c Ratio	0.69	0.51			0.73	0.33	0.31		0.74			
Uniform Delay, d1	31.7	11.1			21.3	18.0	19.3		2.2			
Progression Factor	1.00	1.00			1.00	1.00	1.00		1.00			
Incremental Delay, d2	8.7	0.1			2.1	0.1	0.1		1.9			
Delay (s)	40.3	11.2			23.4	18.1	19.4		4.1			
Level of Service	D	B			C	B	B		A			
Approach Delay (s)		14.9			21.5			6.1			0.0	
Approach LOS		B			C			A			A	

Intersection Summary			
HCM 2000 Control Delay	14.3	HCM 2000 Level of Service	B
HCM 2000 Volume to Capacity ratio	0.96		
Actuated Cycle Length (s)	74.6	Sum of lost time (s)	16.5
Intersection Capacity Utilization	104.9%	ICU Level of Service	G
Analysis Period (min)	15		
c Critical Lane Group			

Movement	WBL	WBR	NBT	NBR	SBL	SBT
Lane Configurations						
Volume (vph)	175	23	398	175	29	529
Ideal Flow (vphpl)	1900	1900	1900	1900	1900	1900
Lane Width	10	10	10	10	10	11
Total Lost time (s)	5.5	5.5	5.5	5.5	5.5	5.5
Lane Util. Factor	1.00	1.00	0.95	1.00	1.00	1.00
Frpb, ped/bikes	1.00	0.96	1.00	0.89	1.00	1.00
Flpb, ped/bikes	1.00	1.00	1.00	1.00	1.00	1.00
Frt	1.00	0.85	1.00	0.85	1.00	1.00
Flt Protected	0.95	1.00	1.00	1.00	0.95	1.00
Satd. Flow (prot)	1652	1425	3209	1277	1604	1749
Flt Permitted	0.95	1.00	1.00	1.00	0.95	1.00
Satd. Flow (perm)	1652	1425	3209	1277	1604	1749
Peak-hour factor, PHF	0.97	0.97	0.97	0.97	0.97	0.97
Growth Factor (vph)	120%	200%	125%	130%	100%	100%
Adj. Flow (vph)	216	47	513	235	30	545
RTOR Reduction (vph)	0	36	0	125	0	0
Lane Group Flow (vph)	216	11	513	110	30	545
Confl. Peds. (#/hr)	10	30		30		
Confl. Bikes (#/hr)				50		
Heavy Vehicles (%)	2%	2%	5%	5%	5%	5%
Turn Type	Prot	Perm	NA	Perm	Prot	NA
Protected Phases	8		2		1	6
Permitted Phases		8		2		
Actuated Green, G (s)	14.1	14.1	29.0	29.0	2.1	36.6
Effective Green, g (s)	14.1	14.1	29.0	29.0	2.1	36.6
Actuated g/C Ratio	0.23	0.23	0.47	0.47	0.03	0.59
Clearance Time (s)	5.5	5.5	5.5	5.5	5.5	5.5
Vehicle Extension (s)	2.0	2.0	2.0	2.0	2.0	2.0
Lane Grp Cap (vph)	377	325	1508	600	54	1037
v/s Ratio Prot	c0.13		0.16		0.02	c0.31
v/s Ratio Perm		0.01		0.09		
v/c Ratio	0.57	0.03	0.34	0.18	0.56	0.53
Uniform Delay, d1	21.1	18.5	10.3	9.5	29.3	7.4
Progression Factor	1.00	1.00	1.00	1.00	1.00	1.00
Incremental Delay, d2	1.3	0.0	0.6	0.7	6.8	1.9
Delay (s)	22.4	18.5	10.9	10.2	36.2	9.3
Level of Service	C	B	B	B	D	A
Approach Delay (s)	21.7		10.7			10.7
Approach LOS	C		B			B

Intersection Summary			
HCM 2000 Control Delay	12.5	HCM 2000 Level of Service	B
HCM 2000 Volume to Capacity ratio	0.60		
Actuated Cycle Length (s)	61.7	Sum of lost time (s)	16.5
Intersection Capacity Utilization	53.4%	ICU Level of Service	A
Analysis Period (min)	15		

c Critical Lane Group

Movement	EBL	EBT	EBR	WBL	WBT	WBR	NBL	NBT	NBR	SBL	SBT	SBR
Lane Configurations												
Volume (vph)	186	984	282	117	643	47	209	14	152	83	14	144
Ideal Flow (vphpl)	1900	1900	1900	1900	1900	1900	1900	1900	1900	1900	1900	1900
Total Lost time (s)	5.0	5.0	5.0	5.0	5.0		5.0	5.0		5.0	5.0	
Lane Util. Factor	1.00	0.95	1.00	1.00	0.95		1.00	1.00		1.00	1.00	
Frpb, ped/bikes	1.00	1.00	0.95	1.00	1.00		1.00	0.98		1.00	0.98	
Flpb, ped/bikes	1.00	1.00	1.00	1.00	1.00		0.99	1.00		0.99	1.00	
Frt	1.00	1.00	0.85	1.00	0.99		1.00	0.86		1.00	0.86	
Flt Protected	0.95	1.00	1.00	0.95	1.00		0.95	1.00		0.95	1.00	
Satd. Flow (prot)	1593	3185	1359	1593	3143		1583	1419		1583	1420	
Flt Permitted	0.95	1.00	1.00	0.95	1.00		0.55	1.00		0.54	1.00	
Satd. Flow (perm)	1593	3185	1359	1593	3143		918	1419		893	1420	
Peak-hour factor, PHF	0.95	0.95	0.95	0.95	0.95	0.95	0.95	0.95	0.95	0.95	0.95	0.95
Growth Factor (vph)	127%	127%	127%	127%	127%	127%	127%	127%	127%	127%	127%	127%
Adj. Flow (vph)	249	1315	377	156	860	63	279	19	203	111	19	193
RTOR Reduction (vph)	0	0	167	0	5	0	0	140	0	0	133	0
Lane Group Flow (vph)	249	1315	210	156	918	0	279	82	0	111	79	0
Confl. Peds. (#/hr)	10		10	10		10	10		10	10		10
Turn Type	Prot	NA	Perm	Prot	NA		Perm	NA		Perm	NA	
Protected Phases	7	4		3	8			2			6	
Permitted Phases			4				2			6		
Actuated Green, G (s)	15.1	35.2	35.2	12.4	32.5		28.2	28.2		28.2	28.2	
Effective Green, g (s)	15.1	35.2	35.2	12.4	32.5		28.2	28.2		28.2	28.2	
Actuated g/C Ratio	0.17	0.39	0.39	0.14	0.36		0.31	0.31		0.31	0.31	
Clearance Time (s)	5.0	5.0	5.0	5.0	5.0		5.0	5.0		5.0	5.0	
Vehicle Extension (s)	2.0	2.0	2.0	2.0	2.0		2.0	2.0		2.0	2.0	
Lane Grp Cap (vph)	264	1234	526	217	1124		285	440		277	441	
v/s Ratio Prot	c0.16	c0.41		0.10	0.29			0.06			0.06	
v/s Ratio Perm			0.15				c0.30			0.12		
v/c Ratio	0.94	1.07	0.40	0.72	0.82		0.98	0.19		0.40	0.18	
Uniform Delay, d1	37.4	27.8	20.1	37.5	26.4		31.0	22.9		24.6	22.8	
Progression Factor	1.00	1.00	1.00	1.00	1.00		1.00	1.00		1.00	1.00	
Incremental Delay, d2	39.6	45.1	0.2	9.1	4.5		46.8	0.1		0.3	0.1	
Delay (s)	77.0	72.9	20.3	46.6	30.9		77.8	23.0		25.0	22.9	
Level of Service	E	E	C	D	C		E	C		C	C	
Approach Delay (s)		63.2			33.2			53.5			23.6	
Approach LOS		E			C			D			C	

Intersection Summary			
HCM 2000 Control Delay	50.2	HCM 2000 Level of Service	D
HCM 2000 Volume to Capacity ratio	1.04		
Actuated Cycle Length (s)	90.8	Sum of lost time (s)	15.0
Intersection Capacity Utilization	98.3%	ICU Level of Service	F
Analysis Period (min)	15		
c Critical Lane Group			

Movement	WBL	WBR	NBT	NBR	SBL	SBT
Lane Configurations						
Volume (vph)	54	88	544	73	37	640
Ideal Flow (vphpl)	1900	1900	1900	1900	1900	1900
Lane Width	10	10	11	10	10	11
Total Lost time (s)	5.5		5.5	5.5	5.5	5.5
Lane Util. Factor	1.00		0.95	1.00	1.00	1.00
Frpb, ped/bikes	0.99		1.00	0.96	1.00	1.00
Flpb, ped/bikes	1.00		1.00	1.00	1.00	1.00
Frt	0.92		1.00	0.85	1.00	1.00
Flt Protected	0.98		1.00	1.00	0.95	1.00
Satd. Flow (prot)	1555		3421	1425	1652	1801
Flt Permitted	0.98		1.00	1.00	0.95	1.00
Satd. Flow (perm)	1555		3421	1425	1652	1801
Peak-hour factor, PHF	0.97	0.97	0.97	0.97	0.97	0.97
Growth Factor (vph)	150%	120%	120%	120%	112%	112%
Adj. Flow (vph)	84	109	673	90	43	739
RTOR Reduction (vph)	57	0	0	22	0	0
Lane Group Flow (vph)	136	0	673	68	43	739
Confl. Peds. (#/hr)	10	10		10	10	
Turn Type	Prot		NA	Perm	Prot	NA
Protected Phases	8		2		1	6
Permitted Phases				2		
Actuated Green, G (s)	10.6		25.4	25.4	2.6	33.5
Effective Green, g (s)	10.6		25.4	25.4	2.6	33.5
Actuated g/C Ratio	0.19		0.46	0.46	0.05	0.61
Clearance Time (s)	5.5		5.5	5.5	5.5	5.5
Vehicle Extension (s)	2.0		2.0	2.0	2.0	2.0
Lane Grp Cap (vph)	299		1577	656	77	1094
v/s Ratio Prot	c0.09		0.20		0.03	c0.41
v/s Ratio Perm				0.05		
v/c Ratio	0.45		0.43	0.10	0.56	0.68
Uniform Delay, d1	19.7		10.0	8.4	25.7	7.2
Progression Factor	1.00		1.00	1.00	1.00	1.00
Incremental Delay, d2	0.4		0.1	0.0	4.9	1.3
Delay (s)	20.1		10.0	8.4	30.6	8.5
Level of Service	C		B	A	C	A
Approach Delay (s)	20.1		9.8			9.7
Approach LOS	C		A			A

Intersection Summary			
HCM 2000 Control Delay	10.9	HCM 2000 Level of Service	B
HCM 2000 Volume to Capacity ratio	0.71		
Actuated Cycle Length (s)	55.1	Sum of lost time (s)	16.5
Intersection Capacity Utilization	60.6%	ICU Level of Service	B
Analysis Period (min)	15		

c Critical Lane Group

Movement	WBL	WBR	NBT	NBR	SBL	SBT
Lane Configurations						
Volume (vph)	51	29	576	81	36	670
Ideal Flow (vphpl)	1900	1900	1900	1900	1900	1900
Total Lost time (s)	5.5		5.5		5.5	5.5
Lane Util. Factor	1.00		0.95		1.00	1.00
Frpb, ped/bikes	0.99		1.00		1.00	1.00
Flpb, ped/bikes	1.00		1.00		1.00	1.00
Frt	0.95		0.98		1.00	1.00
Flt Protected	0.97		1.00		0.95	1.00
Satd. Flow (prot)	1703		3464		1770	1863
Flt Permitted	0.97		1.00		0.95	1.00
Satd. Flow (perm)	1703		3464		1770	1863
Peak-hour factor, PHF	0.97	0.97	0.97	0.97	0.97	0.97
Growth Factor (vph)	110%	110%	130%	120%	105%	120%
Adj. Flow (vph)	58	33	772	100	39	829
RTOR Reduction (vph)	27	0	7	0	0	0
Lane Group Flow (vph)	64	0	865	0	39	829
Confl. Peds. (#/hr)	10	10		10	10	
Turn Type	Prot		NA		Prot	NA
Protected Phases	8		2		1	6
Permitted Phases						
Actuated Green, G (s)	6.5		30.4		2.5	38.4
Effective Green, g (s)	6.5		30.4		2.5	38.4
Actuated g/C Ratio	0.12		0.54		0.04	0.69
Clearance Time (s)	5.5		5.5		5.5	5.5
Vehicle Extension (s)	2.0		2.0		2.0	2.0
Lane Grp Cap (vph)	198		1883		79	1279
v/s Ratio Prot	c0.04		0.25		0.02	c0.45
v/s Ratio Perm						
v/c Ratio	0.32		0.46		0.49	0.65
Uniform Delay, d1	22.7		7.8		26.1	4.9
Progression Factor	1.00		1.00		1.00	1.00
Incremental Delay, d2	0.3		0.1		1.8	0.9
Delay (s)	23.0		7.8		27.8	5.8
Level of Service	C		A		C	A
Approach Delay (s)	23.0		7.8			6.8
Approach LOS	C		A			A

Intersection Summary			
HCM 2000 Control Delay	8.1	HCM 2000 Level of Service	A
HCM 2000 Volume to Capacity ratio	0.68		
Actuated Cycle Length (s)	55.9	Sum of lost time (s)	16.5
Intersection Capacity Utilization	59.4%	ICU Level of Service	B
Analysis Period (min)	15		
c Critical Lane Group			

Movement	NBT	NBR	SBL	SBT	NWL	NWR
Lane Configurations						
Volume (vph)	550	25	195	650	15	313
Ideal Flow (vphpl)	1900	1900	1900	1900	1900	1900
Total Lost time (s)	5.5		5.5	5.5	5.5	5.5
Lane Util. Factor	0.95		1.00	1.00	1.00	1.00
Frpb, ped/bikes	1.00		1.00	1.00	1.00	0.98
Flpb, ped/bikes	1.00		1.00	1.00	1.00	1.00
Frt	0.99		1.00	1.00	1.00	0.85
Flt Protected	1.00		0.95	1.00	0.95	1.00
Satd. Flow (prot)	3336		1770	1863	1770	1551
Flt Permitted	1.00		0.95	1.00	0.95	1.00
Satd. Flow (perm)	3336		1770	1863	1770	1551
Peak-hour factor, PHF	0.99	0.99	0.99	0.99	0.99	0.99
Adj. Flow (vph)	556	25	197	657	15	316
RTOR Reduction (vph)	3	0	0	0	0	269
Lane Group Flow (vph)	578	0	197	657	15	47
Confl. Peds. (#/hr)		10	10		10	10
Parking (#/hr)	0					
Turn Type	NA		Prot	NA	Prot	Perm
Protected Phases	2		1	6	8	
Permitted Phases						8
Actuated Green, G (s)	13.9		10.7	30.1	7.1	7.1
Effective Green, g (s)	13.9		10.7	30.1	7.1	7.1
Actuated g/C Ratio	0.29		0.22	0.62	0.15	0.15
Clearance Time (s)	5.5		5.5	5.5	5.5	5.5
Vehicle Extension (s)	2.0		2.0	2.0	2.0	2.0
Lane Grp Cap (vph)	962		392	1163	260	228
v/s Ratio Prot	0.17		0.11	c0.35	0.01	
v/s Ratio Perm						c0.03
v/c Ratio	0.60		0.50	0.56	0.06	0.20
Uniform Delay, d1	14.8		16.4	5.3	17.7	18.1
Progression Factor	1.00		1.00	1.00	1.00	1.00
Incremental Delay, d2	0.7		0.4	0.4	0.0	0.2
Delay (s)	15.5		16.8	5.6	17.7	18.2
Level of Service	B		B	A	B	B
Approach Delay (s)	15.5			8.2	18.2	
Approach LOS	B			A	B	

Intersection Summary			
HCM 2000 Control Delay	12.5	HCM 2000 Level of Service	B
HCM 2000 Volume to Capacity ratio	0.58		
Actuated Cycle Length (s)	48.2	Sum of lost time (s)	16.5
Intersection Capacity Utilization	49.8%	ICU Level of Service	A
Analysis Period (min)	15		
c Critical Lane Group			

Movement	EBL	EBT	EBR	WBL	WBT	WBR	NBL	NBT	NBR	SBL	SBT	SBR
Lane Configurations												
Volume (vph)	7	50	130	125	100	24	23	391	284	11	293	7
Ideal Flow (vphpl)	1900	1900	1900	1900	1900	1900	1900	1900	1900	1900	1900	1900
Total Lost time (s)		5.0			5.0	5.0		5.0	5.0		5.0	
Lane Util. Factor		1.00			1.00	1.00		1.00	1.00		1.00	
Frpb, ped/bikes		0.98			1.00	0.96		1.00	0.96		1.00	
Flpb, ped/bikes		1.00			1.00	1.00		1.00	1.00		1.00	
Frt		0.91			1.00	0.85		1.00	0.85		1.00	
Flt Protected		1.00			0.97	1.00		1.00	1.00		1.00	
Satd. Flow (prot)		1657			1806	1522		1668	1521		1851	
Flt Permitted		0.98			0.61	1.00		0.94	1.00		0.98	
Satd. Flow (perm)		1634			1141	1522		1579	1521		1817	
Peak-hour factor, PHF	0.97	0.97	0.97	0.97	0.97	0.97	0.97	0.97	0.97	0.97	0.97	0.97
Growth Factor (vph)	120%	120%	120%	100%	100%	120%	200%	120%	90%	120%	120%	120%
Adj. Flow (vph)	9	62	161	129	103	30	47	484	264	14	362	9
RTOR Reduction (vph)	0	122	0	0	0	23	0	0	103	0	1	0
Lane Group Flow (vph)	0	110	0	0	232	7	0	531	161	0	384	0
Confl. Peds. (#/hr)	10		10	10		10	10		10	10		10
Parking (#/hr)								0				
Turn Type	Perm	NA		Perm	NA	Perm	Perm	NA	Perm	Perm	NA	
Protected Phases		2			6			8			4	
Permitted Phases	2			6		6	8		8	4		
Actuated Green, G (s)		16.6			16.6	16.6		41.4	41.4		41.4	
Effective Green, g (s)		16.6			16.6	16.6		41.4	41.4		41.4	
Actuated g/C Ratio		0.24			0.24	0.24		0.61	0.61		0.61	
Clearance Time (s)		5.0			5.0	5.0		5.0	5.0		5.0	
Vehicle Extension (s)		2.0			2.0	2.0		2.0	2.0		2.0	
Lane Grp Cap (vph)		398			278	371		961	926		1106	
v/s Ratio Prot												
v/s Ratio Perm		0.07			c0.20	0.00		c0.34	0.11		0.21	
v/c Ratio		0.28			0.83	0.02		0.55	0.17		0.35	
Uniform Delay, d1		20.8			24.4	19.5		7.8	5.8		6.6	
Progression Factor		1.00			1.00	1.00		1.00	1.00		1.00	
Incremental Delay, d2		0.1			18.2	0.0		2.3	0.4		0.9	
Delay (s)		21.0			42.6	19.5		10.1	6.2		7.5	
Level of Service		C			D	B		B	A		A	
Approach Delay (s)		21.0			40.0			8.8			7.5	
Approach LOS		C			D			A			A	

Intersection Summary			
HCM 2000 Control Delay	15.1	HCM 2000 Level of Service	B
HCM 2000 Volume to Capacity ratio	0.63		
Actuated Cycle Length (s)	68.0	Sum of lost time (s)	10.0
Intersection Capacity Utilization	83.8%	ICU Level of Service	E
Analysis Period (min)	15		

c Critical Lane Group

Movement	EBL	EBT	EBR	WBL	WBT	WBR	NBL	NBT	NBR	SBL	SBT	SBR
Lane Configurations												
Volume (vph)	472	55	545	25	66	30	443	193	17	17	176	319
Ideal Flow (vphpl)	1900	1900	1900	1900	1900	1900	1900	1900	1900	1900	1900	1900
Total Lost time (s)	5.0	5.5	5.5	5.0	5.0		5.5	5.5			5.5	5.5
Lane Util. Factor	0.97	1.00	1.00	1.00	1.00		0.91	0.91			0.95	0.95
Frpb, ped/bikes	1.00	1.00	0.96	1.00	0.99		1.00	1.00			0.99	0.98
Flpb, ped/bikes	1.00	1.00	1.00	1.00	1.00		1.00	1.00			1.00	1.00
Frt	1.00	1.00	0.85	1.00	0.95		1.00	0.99			0.96	0.85
Flt Protected	0.95	1.00	1.00	0.95	1.00		0.95	0.97			1.00	1.00
Satd. Flow (prot)	3433	1863	1527	1770	1759		1610	3281			1677	1467
Flt Permitted	0.95	1.00	1.00	0.95	1.00		0.95	0.97			1.00	1.00
Satd. Flow (perm)	3433	1863	1527	1770	1759		1610	3281			1677	1467
Peak-hour factor, PHF	0.91	0.91	0.91	0.91	0.91	0.91	0.91	0.91	0.91	0.91	0.91	0.91
Growth Factor (vph)	120%	120%	120%	120%	120%	120%	120%	120%	120%	120%	120%	120%
Adj. Flow (vph)	622	73	719	33	87	40	584	255	22	22	232	421
RTOR Reduction (vph)	0	0	453	0	17	0	0	3	0	0	14	247
Lane Group Flow (vph)	622	73	266	33	110	0	292	566	0	0	341	73
Confl. Peds. (#/hr)	10		10	10		10	10		10	10		10
Turn Type	Prot	NA	Perm	Prot	NA		Split	NA		Split	NA	Perm
Protected Phases	7	4		3	8		2	2		6	6	
Permitted Phases			4									6
Actuated Green, G (s)	17.2	26.9	26.9	2.2	12.4		20.0	20.0			20.7	20.7
Effective Green, g (s)	17.2	26.9	26.9	2.2	12.4		20.0	20.0			20.7	20.7
Actuated g/C Ratio	0.19	0.29	0.29	0.02	0.14		0.22	0.22			0.23	0.23
Clearance Time (s)	5.0	5.5	5.5	5.0	5.0		5.5	5.5			5.5	5.5
Vehicle Extension (s)	2.0	2.0	2.0	2.0	2.0		2.0	2.0			2.0	2.0
Lane Grp Cap (vph)	646	548	449	42	238		352	718			380	332
v/s Ratio Prot	c0.18	0.04		0.02	0.06		c0.18	0.17			c0.20	
v/s Ratio Perm			c0.17									0.05
v/c Ratio	0.96	0.13	0.59	0.79	0.46		0.83	0.79			0.90	0.22
Uniform Delay, d1	36.7	23.6	27.5	44.3	36.4		34.0	33.7			34.3	28.7
Progression Factor	1.00	1.00	1.00	1.00	1.00		1.00	1.00			1.00	1.00
Incremental Delay, d2	26.1	0.0	1.4	58.6	0.5		14.2	5.3			22.4	0.1
Delay (s)	62.9	23.7	28.9	102.9	36.9		48.2	39.0			56.7	28.8
Level of Service	E	C	C	F	D		D	D			E	C
Approach Delay (s)		43.6			50.5			42.1			43.5	
Approach LOS		D			D			D			D	

Intersection Summary			
HCM 2000 Control Delay	43.5	HCM 2000 Level of Service	D
HCM 2000 Volume to Capacity ratio	0.86		
Actuated Cycle Length (s)	91.3	Sum of lost time (s)	21.5
Intersection Capacity Utilization	78.6%	ICU Level of Service	D
Analysis Period (min)	15		
c Critical Lane Group			

Movement	EBL	EBT	EBR	WBL	WBT	WBR	NBL	NBT	NBR	SBL	SBT	SBR
Lane Configurations												
Volume (vph)	57	4	30	57	6	21	26	521	32	11	596	43
Ideal Flow (vphpl)	1900	1900	1900	1900	1900	1900	1900	1900	1900	1900	1900	1900
Total Lost time (s)		4.9			4.9		4.4	4.9		4.4	4.9	
Lane Util. Factor		1.00			1.00		1.00	1.00		1.00	1.00	
Frpb, ped/bikes		0.99			0.99		1.00	1.00		1.00	1.00	
Flpb, ped/bikes		0.99			0.99		1.00	1.00		1.00	1.00	
Frt		0.96			0.97		1.00	0.99		1.00	0.98	
Flt Protected		0.97			0.97		0.95	1.00		0.95	1.00	
Satd. Flow (prot)		1688			1707		1770	1841		1770	1822	
Flt Permitted		0.81			0.78		0.95	1.00		0.95	1.00	
Satd. Flow (perm)		1406			1383		1770	1841		1770	1822	
Peak-hour factor, PHF	0.92	0.92	0.92	0.92	0.92	0.92	0.92	0.92	0.92	0.92	0.92	0.92
Growth Factor (vph)	110%	110%	110%	110%	110%	110%	200%	110%	110%	110%	110%	200%
Adj. Flow (vph)	68	5	36	68	7	25	57	623	38	13	713	93
RTOR Reduction (vph)	0	31	0	0	22	0	0	2	0	0	5	0
Lane Group Flow (vph)	0	78	0	0	78	0	57	659	0	13	801	0
Confl. Peds. (#/hr)	10		10	10		10	10		10	10		10
Turn Type	Perm	NA		Perm	NA		Prot	NA		Prot	NA	
Protected Phases		4			8		5	2		1	6	
Permitted Phases	4			8								
Actuated Green, G (s)		8.8			8.8		4.2	43.8		1.2	40.8	
Effective Green, g (s)		8.8			8.8		4.2	43.8		1.2	40.8	
Actuated g/C Ratio		0.13			0.13		0.06	0.64		0.02	0.60	
Clearance Time (s)		4.9			4.9		4.4	4.9		4.4	4.9	
Vehicle Extension (s)		2.0			2.0		2.0	2.0		2.0	2.0	
Lane Grp Cap (vph)		181			178		109	1185		31	1093	
v/s Ratio Prot							c0.03	c0.36		0.01	c0.44	
v/s Ratio Perm		0.06			c0.06							
v/c Ratio		0.43			0.44		0.52	0.56		0.42	0.73	
Uniform Delay, d1		27.3			27.3		30.9	6.7		33.1	9.7	
Progression Factor		1.36			1.00		1.02	0.95		1.00	1.00	
Incremental Delay, d2		0.5			0.6		1.6	1.5		3.3	4.4	
Delay (s)		37.5			28.0		33.3	7.8		36.4	14.1	
Level of Service		D			C		C	A		D	B	
Approach Delay (s)		37.5			28.0			9.8			14.4	
Approach LOS		D			C			A			B	

Intersection Summary			
HCM 2000 Control Delay	14.8	HCM 2000 Level of Service	B
HCM 2000 Volume to Capacity ratio	0.66		
Actuated Cycle Length (s)	68.0	Sum of lost time (s)	14.2
Intersection Capacity Utilization	60.8%	ICU Level of Service	B
Analysis Period (min)	15		
c Critical Lane Group			

Movement	NBT	NBR	SBL	SBT	SWL	SWR
Lane Configurations						
Volume (vph)	470	660	20	690	690	25
Ideal Flow (vphpl)	1900	1900	1900	1900	1900	1900
Total Lost time (s)	5.0	5.0	5.5	5.0	5.0	
Lane Util. Factor	1.00	1.00	1.00	1.00	1.00	
Frpb, ped/bikes	1.00	0.97	1.00	1.00	1.00	
Flpb, ped/bikes	1.00	1.00	1.00	1.00	1.00	
Frt	1.00	0.85	1.00	1.00	1.00	
Flt Protected	1.00	1.00	0.95	1.00	0.95	
Satd. Flow (prot)	1863	1530	1770	1863	1767	
Flt Permitted	1.00	1.00	0.95	1.00	0.95	
Satd. Flow (perm)	1863	1530	1770	1863	1767	
Peak-hour factor, PHF	0.95	0.95	0.95	0.95	0.95	0.95
Adj. Flow (vph)	495	695	21	726	726	26
RTOR Reduction (vph)	0	445	0	0	2	0
Lane Group Flow (vph)	495	250	21	726	750	0
Confl. Peds. (#/hr)		10	10		10	10
Parking (#/hr)						
Turn Type	NA	custom	Prot	NA	Prot	
Protected Phases			1		4	
Permitted Phases	2	2		6		
Actuated Green, G (s)	24.5	24.5	1.6	31.6	26.4	
Effective Green, g (s)	24.5	24.5	1.6	31.6	26.4	
Actuated g/C Ratio	0.36	0.36	0.02	0.46	0.39	
Clearance Time (s)	5.0	5.0	5.5	5.0	5.0	
Vehicle Extension (s)	2.0	2.0	2.0	2.0	2.0	
Lane Grp Cap (vph)	671	551	41	865	686	
v/s Ratio Prot			0.01		c0.42	
v/s Ratio Perm	0.27	0.16		c0.39		
v/c Ratio	0.74	0.45	0.51	0.84	1.09	
Uniform Delay, d1	19.0	16.6	32.8	16.0	20.8	
Progression Factor	1.00	1.00	0.89	1.43	1.00	
Incremental Delay, d2	7.1	2.7	1.8	2.9	62.7	
Delay (s)	26.1	19.3	31.0	25.8	83.5	
Level of Service	C	B	C	C	F	
Approach Delay (s)	22.1			26.0	83.5	
Approach LOS	C			C	F	

Intersection Summary			
HCM 2000 Control Delay	40.4	HCM 2000 Level of Service	D
HCM 2000 Volume to Capacity ratio	1.05		
Actuated Cycle Length (s)	68.0	Sum of lost time (s)	15.5
Intersection Capacity Utilization	84.4%	ICU Level of Service	E
Analysis Period (min)	15		
c Critical Lane Group			

Movement	EBL	EBT	EBR	WBL	WBT	WBR	NBL	NBT	NBR	SBL	SBT	SBR
Lane Configurations												
Volume (vph)	30	4	30	40	11	15	70	580	20	10	710	50
Ideal Flow (vphpl)	1900	1900	1900	1900	1900	1900	1900	1900	1900	1900	1900	1900
Total Lost time (s)		5.5			5.5		5.5	5.5		5.5	5.5	
Lane Util. Factor		1.00			1.00		1.00	0.95		1.00	1.00	
Frpb, ped/bikes		0.98			0.99		1.00	1.00		1.00	1.00	
Flpb, ped/bikes		0.99			0.99		1.00	1.00		1.00	1.00	
Frt		0.94			0.97		1.00	1.00		1.00	0.99	
Flt Protected		0.98			0.97		0.95	1.00		0.95	1.00	
Satd. Flow (prot)		1663			1723		1770	3517		1770	1839	
Flt Permitted		0.84			0.79		0.95	1.00		0.95	1.00	
Satd. Flow (perm)		1427			1404		1770	3517		1770	1839	
Peak-hour factor, PHF	0.95	0.95	0.95	0.95	0.95	0.95	0.95	0.95	0.95	0.95	0.95	0.95
Adj. Flow (vph)	32	4	32	42	12	16	74	611	21	11	747	53
RTOR Reduction (vph)	0	29	0	0	14	0	0	1	0	0	2	0
Lane Group Flow (vph)	0	39	0	0	56	0	74	631	0	11	798	0
Confl. Peds. (#/hr)	10		10	10		10	10		10	10		10
Turn Type	Perm	NA		Perm	NA		Prot	NA		Prot	NA	
Protected Phases		4			8		5	2		1	6	
Permitted Phases	4			8								
Actuated Green, G (s)		7.0			7.0		6.1	46.9		1.0	41.8	
Effective Green, g (s)		7.0			7.0		6.1	46.9		1.0	41.8	
Actuated g/C Ratio		0.10			0.10		0.09	0.66		0.01	0.59	
Clearance Time (s)		5.5			5.5		5.5	5.5		5.5	5.5	
Vehicle Extension (s)		2.0			2.0		2.0	2.0		2.0	2.0	
Lane Grp Cap (vph)		139			137		151	2310		24	1076	
v/s Ratio Prot							c0.04	c0.18		0.01	c0.43	
v/s Ratio Perm		0.03			c0.04							
v/c Ratio		0.28			0.41		0.49	0.27		0.46	0.74	
Uniform Delay, d1		29.9			30.2		31.2	5.1		34.9	10.8	
Progression Factor		1.00			1.00		1.00	1.00		1.00	1.00	
Incremental Delay, d2		0.4			0.7		0.9	0.0		5.0	2.4	
Delay (s)		30.3			31.0		32.1	5.1		39.9	13.3	
Level of Service		C			C		C	A		D	B	
Approach Delay (s)		30.3			31.0			8.0			13.7	
Approach LOS		C			C			A			B	

Intersection Summary			
HCM 2000 Control Delay	12.6	HCM 2000 Level of Service	B
HCM 2000 Volume to Capacity ratio	0.66		
Actuated Cycle Length (s)	71.4	Sum of lost time (s)	16.5
Intersection Capacity Utilization	66.0%	ICU Level of Service	C
Analysis Period (min)	15		

c Critical Lane Group

Movement	EBL	EBT	EBR	WBL	WBT	WBR	NBL	NBT	NBR	SBL	SBT	SBR
Lane Configurations												
Volume (vph)	125	150	100	60	100	100	40	505	40	100	550	150
Ideal Flow (vphpl)	1900	1900	1900	1900	1900	1900	1900	1900	1900	1900	1900	1900
Total Lost time (s)		4.9			4.9		4.4	5.8		4.4	5.5	
Lane Util. Factor		1.00			1.00		1.00	0.95		1.00	1.00	
Frpb, ped/bikes		0.99			0.99		1.00	1.00		1.00	0.99	
Flpb, ped/bikes		1.00			1.00		1.00	1.00		1.00	1.00	
Frt		0.96			0.95		1.00	0.99		1.00	0.97	
Flt Protected		0.98			0.99		0.95	1.00		0.95	1.00	
Satd. Flow (prot)		1749			1730		1770	3490		1770	1784	
Flt Permitted		0.75			0.83		0.95	1.00		0.95	1.00	
Satd. Flow (perm)		1330			1446		1770	3490		1770	1784	
Peak-hour factor, PHF	0.93	0.93	0.93	0.93	0.93	0.93	0.93	0.93	0.93	0.93	0.93	0.93
Adj. Flow (vph)	134	161	108	65	108	108	43	543	43	108	591	161
RTOR Reduction (vph)	0	24	0	0	41	0	0	7	0	0	10	0
Lane Group Flow (vph)	0	379	0	0	240	0	43	579	0	108	742	0
Confl. Peds. (#/hr)	10		10	10		10	10		10	10		10
Turn Type	Perm	NA		Perm	NA		Prot	NA		Prot	NA	
Protected Phases		4			8		5	2		1	6	
Permitted Phases	4			8								
Actuated Green, G (s)		22.7			22.7		4.3	22.3		7.9	26.2	
Effective Green, g (s)		22.7			22.7		4.3	22.3		7.9	26.2	
Actuated g/C Ratio		0.33			0.33		0.06	0.33		0.12	0.39	
Clearance Time (s)		4.9			4.9		4.4	5.8		4.4	5.5	
Vehicle Extension (s)		2.0			2.0		2.0	2.0		2.0	2.0	
Lane Grp Cap (vph)		443			482		111	1144		205	687	
v/s Ratio Prot							0.02	0.17		c0.06	c0.42	
v/s Ratio Perm		c0.29			0.17							
v/c Ratio		0.86			0.50		0.39	0.51		0.53	1.08	
Uniform Delay, d1		21.1			18.1		30.6	18.4		28.3	20.9	
Progression Factor		1.00			1.33		1.43	0.68		1.00	1.00	
Incremental Delay, d2		14.4			0.3		0.7	1.4		1.1	57.8	
Delay (s)		35.5			24.4		44.5	13.9		29.4	78.7	
Level of Service		D			C		D	B		C	E	
Approach Delay (s)		35.5			24.4			16.0			72.5	
Approach LOS		D			C			B			E	

Intersection Summary			
HCM 2000 Control Delay	43.1	HCM 2000 Level of Service	D
HCM 2000 Volume to Capacity ratio	0.96		
Actuated Cycle Length (s)	68.0	Sum of lost time (s)	15.1
Intersection Capacity Utilization	86.7%	ICU Level of Service	E
Analysis Period (min)	15		

c Critical Lane Group

Movement	EBL	EBR	EBR2	NBL	NBT	NBR	SBL	SBT	SBR	NWL2	NWL	NWR
Lane Configurations												
Volume (vph)	150	100	400	100	414	20	0	1181	200	15	100	568
Ideal Flow (vphpl)	1900	1900	1900	1900	1900	1900	1900	1900	1900	1900	1900	1900
Total Lost time (s)	4.9		4.9	4.4	5.3			5.3			4.9	4.9
Lane Util. Factor	1.00		0.95	1.00	1.00			0.95			1.00	1.00
Frpb, ped/bikes	0.98		0.98	1.00	1.00			0.99			1.00	0.98
Flpb, ped/bikes	1.00		1.00	1.00	1.00			1.00			0.96	1.00
Frt	0.92		0.85	1.00	0.99			0.98			1.00	0.85
Flt Protected	0.98		1.00	0.95	1.00			1.00			0.95	1.00
Satd. Flow (prot)	1469		1468	1770	1846			3443			1701	1546
Flt Permitted	0.80		1.00	0.95	1.00			1.00			0.95	1.00
Satd. Flow (perm)	1196		1468	1770	1846			3443			1701	1546
Peak-hour factor, PHF	0.98	0.98	0.98	0.98	0.98	0.98	0.98	0.98	0.98	0.98	0.98	0.98
Adj. Flow (vph)	153	102	408	102	422	20	0	1205	204	15	102	580
RTOR Reduction (vph)	67	0	67	0	1	0	0	14	0	0	0	288
Lane Group Flow (vph)	266	0	263	102	441	0	0	1395	0	0	117	292
Confl. Peds. (#/hr)	10	10	10			10	10		10	10	10	10
Parking (#/hr)	0											
Turn Type	Perm		Perm	Prot	NA			NA		Perm	Prot	Perm
Protected Phases				5	2			6			8	
Permitted Phases	4		4							8		8
Actuated Green, G (s)	23.8		23.8	9.1	58.0			44.5			23.8	23.8
Effective Green, g (s)	23.8		23.8	9.1	58.0			44.5			23.8	23.8
Actuated g/C Ratio	0.26		0.26	0.10	0.63			0.48			0.26	0.26
Clearance Time (s)	4.9		4.9	4.4	5.3			5.3			4.9	4.9
Vehicle Extension (s)	2.0		2.0	2.0	2.0			2.0			2.0	2.0
Lane Grp Cap (vph)	309		379	175	1163			1665			440	399
v/s Ratio Prot				c0.06	0.24			c0.41				
v/s Ratio Perm	c0.22		0.18								0.07	0.19
v/c Ratio	0.86		0.69	0.58	0.38			0.84			0.27	0.73
Uniform Delay, d1	32.5		30.8	39.6	8.3			20.6			27.1	31.2
Progression Factor	1.00		1.00	0.83	1.66			1.00			1.15	1.53
Incremental Delay, d2	20.4		4.4	0.3	0.1			5.2			0.1	4.9
Delay (s)	53.0		35.2	33.1	13.8			25.8			31.4	52.6
Level of Service	D		D	C	B			C			C	D
Approach Delay (s)	44.1				17.4			25.8			49.0	
Approach LOS	D				B			C			D	

Intersection Summary			
HCM 2000 Control Delay	33.0	HCM 2000 Level of Service	C
HCM 2000 Volume to Capacity ratio	0.81		
Actuated Cycle Length (s)	92.0	Sum of lost time (s)	14.6
Intersection Capacity Utilization	90.6%	ICU Level of Service	E
Analysis Period (min)	15		
c Critical Lane Group			

Movement	WBL	WBR	NBT	NBR	SBL	SBT
Lane Configurations						
Volume (vph)	873	0	504	848	685	821
Ideal Flow (vphpl)	1900	1900	1900	1900	1900	1900
Total Lost time (s)	5.5		5.5	5.5	5.5	5.5
Lane Util. Factor	0.97		1.00	1.00	0.97	0.95
Frpb, ped/bikes	1.00		1.00	1.00	1.00	1.00
Flpb, ped/bikes	1.00		1.00	1.00	1.00	1.00
Frt	1.00		1.00	0.85	1.00	1.00
Flt Protected	0.95		1.00	1.00	0.95	1.00
Satd. Flow (prot)	3433		1863	1583	3433	3539
Flt Permitted	0.95		1.00	1.00	0.95	1.00
Satd. Flow (perm)	3433		1863	1583	3433	3539
Peak-hour factor, PHF	0.96	0.96	0.96	0.96	0.96	0.96
Growth Factor (vph)	106%	106%	106%	106%	106%	106%
Adj. Flow (vph)	964	0	556	936	756	907
RTOR Reduction (vph)	0	0	0	3	0	0
Lane Group Flow (vph)	964	0	556	933	756	907
Confl. Peds. (#/hr)						
Turn Type	Prot		NA	pt+ov	Prot	NA
Protected Phases	8		2	2 8	1	6
Permitted Phases						
Actuated Green, G (s)	27.9		26.5	59.9	21.1	53.1
Effective Green, g (s)	27.9		26.5	59.9	21.1	53.1
Actuated g/C Ratio	0.30		0.29	0.65	0.23	0.58
Clearance Time (s)	5.5		5.5		5.5	5.5
Vehicle Extension (s)	2.0		2.0		2.0	2.0
Lane Grp Cap (vph)	1041		536	1030	787	2042
v/s Ratio Prot	0.28		c0.30	c0.59	c0.22	0.26
v/s Ratio Perm						
v/c Ratio	0.93		1.04	0.91	0.96	0.44
Uniform Delay, d1	31.1		32.8	13.6	35.0	11.1
Progression Factor	1.03		1.00	1.00	0.87	0.61
Incremental Delay, d2	10.5		48.9	10.9	16.8	0.4
Delay (s)	42.5		81.6	24.6	47.4	7.2
Level of Service	D		F	C	D	A
Approach Delay (s)	42.5		45.8			25.4
Approach LOS	D		D			C

Intersection Summary			
HCM 2000 Control Delay	36.8	HCM 2000 Level of Service	D
HCM 2000 Volume to Capacity ratio	1.00		
Actuated Cycle Length (s)	92.0	Sum of lost time (s)	16.5
Intersection Capacity Utilization	89.0%	ICU Level of Service	E
Analysis Period (min)	15		
c Critical Lane Group			

Movement	EBL	EBT	EBR	WBL	WBT	WBR	SEL	SET	SER	NWL	NWT	NWR
Lane Configurations												
Volume (vph)	0	1080	485	204	657	358	75	25	25	230	193	127
Ideal Flow (vphpl)	1900	1900	1900	1900	1900	1900	1900	1900	1900	1900	1900	1900
Total Lost time (s)		5.0	5.0	5.0	5.0			5.0		5.0	5.0	5.0
Lane Util. Factor		0.95	1.00	1.00	0.95			1.00		1.00	1.00	1.00
Frpb, ped/bikes		1.00	0.97	1.00	0.99			1.00		1.00	1.00	0.96
Flpb, ped/bikes		1.00	1.00	1.00	1.00			0.99		0.99	1.00	1.00
Frt		1.00	0.85	1.00	0.94			0.97		1.00	1.00	0.85
Flt Protected		1.00	1.00	0.95	1.00			0.97		0.95	1.00	1.00
Satd. Flow (prot)		3185	1386	1593	2962			1565		1579	1676	1371
Flt Permitted		1.00	1.00	0.95	1.00			0.60		0.68	1.00	1.00
Satd. Flow (perm)		3185	1386	1593	2962			964		1123	1676	1371
Peak-hour factor, PHF	0.94	0.94	0.94	0.94	0.94	0.94	0.94	0.94	0.94	0.94	0.94	0.94
Growth Factor (vph)	106%	106%	106%	106%	106%	130%	100%	100%	100%	103%	106%	150%
Adj. Flow (vph)	0	1218	547	230	741	495	80	27	27	252	218	203
RTOR Reduction (vph)	0	0	289	0	116	0	0	11	0	0	0	153
Lane Group Flow (vph)	0	1218	258	230	1120	0	0	123	0	252	218	50
Confl. Peds. (#/hr)	10		10	10		10	10		10	10		10
Turn Type		NA	Perm	Prot	NA		Perm	NA		Perm	NA	Perm
Protected Phases		4		3	8			6			2	
Permitted Phases			4				6			2		2
Actuated Green, G (s)		39.2	39.2	15.0	59.2			22.8		22.8	22.8	22.8
Effective Green, g (s)		39.2	39.2	15.0	59.2			22.8		22.8	22.8	22.8
Actuated g/C Ratio		0.43	0.43	0.16	0.64			0.25		0.25	0.25	0.25
Clearance Time (s)		5.0	5.0	5.0	5.0			5.0		5.0	5.0	5.0
Vehicle Extension (s)		2.0	2.0	2.0	2.0			2.0		2.0	2.0	2.0
Lane Grp Cap (vph)		1357	590	259	1905			238		278	415	339
v/s Ratio Prot		c0.38		c0.14	0.38						0.13	
v/s Ratio Perm			0.19					0.13		c0.22		0.04
v/c Ratio		0.90	0.44	0.89	0.59			0.52		0.91	0.53	0.15
Uniform Delay, d1		24.5	18.6	37.7	9.4			29.9		33.6	29.9	27.0
Progression Factor		0.95	1.42	1.00	1.00			0.49		1.00	1.00	1.00
Incremental Delay, d2		4.6	1.0	27.8	1.3			0.6		30.0	0.6	0.1
Delay (s)		27.8	27.5	65.5	10.7			15.1		63.6	30.5	27.1
Level of Service		C	C	E	B			B		E	C	C
Approach Delay (s)		27.7			19.3			15.1			41.9	
Approach LOS		C			B			B			D	

Intersection Summary			
HCM 2000 Control Delay	26.6	HCM 2000 Level of Service	C
HCM 2000 Volume to Capacity ratio	0.90		
Actuated Cycle Length (s)	92.0	Sum of lost time (s)	15.0
Intersection Capacity Utilization	93.1%	ICU Level of Service	F
Analysis Period (min)	15		
c Critical Lane Group			

Movement	EBL	EBT	EBR	WBL	WBT	WBR	NBL	NBT	NBR	SBL	SBT	SBR
Lane Configurations												
Volume (vph)	256	824	94	5	773	42	68	7	10	122	21	446
Ideal Flow (vphpl)	1900	1900	1900	1900	1900	1900	1900	1900	1900	1900	1900	1900
Total Lost time (s)	5.0	5.0		5.0	5.0			4.9			5.0	5.0
Lane Util. Factor	1.00	0.95		1.00	0.95			1.00			1.00	1.00
Frpb, ped/bikes	1.00	1.00		1.00	1.00			1.00			1.00	0.98
Flpb, ped/bikes	1.00	1.00		1.00	1.00			1.00			0.99	1.00
Frt	1.00	0.99		1.00	0.99			0.97			1.00	0.85
Flt Protected	0.95	1.00		0.95	1.00			0.97			0.96	1.00
Satd. Flow (prot)	1770	3483		1770	3506			1734			1776	1552
Flt Permitted	0.95	1.00		0.95	1.00			0.68			0.74	1.00
Satd. Flow (perm)	1770	3483		1770	3506			1228			1365	1552
Peak-hour factor, PHF	0.91	0.91	0.91	0.91	0.91	0.91	0.91	0.91	0.91	0.91	0.91	0.91
Growth Factor (vph)	106%	130%	106%	200%	121%	130%	106%	106%	200%	106%	106%	106%
Adj. Flow (vph)	298	1177	109	11	1028	60	79	8	22	142	24	520
RTOR Reduction (vph)	0	7	0	0	5	0	0	16	0	0	0	374
Lane Group Flow (vph)	298	1279	0	11	1083	0	0	93	0	0	166	146
Confl. Peds. (#/hr)	10		10	10		10	10		10	10		10
Turn Type	Prot	NA		Prot	NA		Perm	NA		Perm	NA	Perm
Protected Phases	7	4		3	8			2			6	
Permitted Phases							2			6		6
Actuated Green, G (s)	12.5	32.9		1.0	21.4			13.1			13.0	13.0
Effective Green, g (s)	12.5	32.9		1.0	21.4			13.1			13.0	13.0
Actuated g/C Ratio	0.20	0.53		0.02	0.35			0.21			0.21	0.21
Clearance Time (s)	5.0	5.0		5.0	5.0			4.9			5.0	5.0
Vehicle Extension (s)	2.0	2.0		2.0	2.0			2.0			2.0	2.0
Lane Grp Cap (vph)	357	1851		28	1212			259			286	325
v/s Ratio Prot	c0.17	0.37		0.01	c0.31							
v/s Ratio Perm								0.08			c0.12	0.09
v/c Ratio	0.83	0.69		0.39	0.89			0.36			0.58	0.45
Uniform Delay, d1	23.7	10.7		30.1	19.2			20.8			22.0	21.3
Progression Factor	1.00	1.00		1.00	1.00			1.00			1.00	1.00
Incremental Delay, d2	14.7	0.9		3.3	8.5			0.3			1.9	0.4
Delay (s)	38.5	11.7		33.4	27.7			21.1			23.9	21.7
Level of Service	D	B		C	C			C			C	C
Approach Delay (s)		16.7			27.7			21.1			22.2	
Approach LOS		B			C			C			C	

Intersection Summary			
HCM 2000 Control Delay	21.4	HCM 2000 Level of Service	C
HCM 2000 Volume to Capacity ratio	0.79		
Actuated Cycle Length (s)	61.9	Sum of lost time (s)	15.0
Intersection Capacity Utilization	80.0%	ICU Level of Service	D
Analysis Period (min)	15		
c Critical Lane Group			

Movement	EBL	EBT	EBR	WBL	WBT	WBR	SEL	SET	SER	NWL	NWT	NWR
Lane Configurations												
Volume (vph)	94	12	64	54	15	53	44	552	119	47	407	28
Ideal Flow (vphpl)	1900	1900	1900	1900	1900	1900	1900	1900	1900	1900	1900	1900
Total Lost time (s)		5.0			5.0		5.0	5.0		5.0	5.0	
Lane Util. Factor		1.00			1.00		1.00	0.95		1.00	0.95	
Frpb, ped/bikes		0.99			0.99		1.00	0.99		1.00	1.00	
Flpb, ped/bikes		1.00			1.00		1.00	1.00		1.00	1.00	
Frt		0.95			0.94		1.00	0.97		1.00	0.99	
Flt Protected		0.97			0.98		0.95	1.00		0.95	1.00	
Satd. Flow (prot)		1700			1695		1770	3420		1770	3503	
Flt Permitted		0.79			0.79		0.95	1.00		0.95	1.00	
Satd. Flow (perm)		1378			1360		1770	3420		1770	3503	
Peak-hour factor, PHF	0.97	0.97	0.97	0.98	0.97	0.98	0.98	0.98	0.97	0.97	0.98	0.98
Growth Factor (vph)	100%	100%	100%	100%	100%	100%	100%	100%	100%	106%	125%	106%
Adj. Flow (vph)	97	12	66	55	15	54	45	563	123	51	519	30
RTOR Reduction (vph)	0	42	0	0	44	0	0	17	0	0	4	0
Lane Group Flow (vph)	0	133	0	0	80	0	45	669	0	51	545	0
Confl. Peds. (#/hr)	10		10	10		10	10		10	10		10
Turn Type	Perm	NA		Perm	NA		Prot	NA		Prot	NA	
Protected Phases		4			8		1			5	2	
Permitted Phases	4			8				6				
Actuated Green, G (s)		12.0			12.0		6.3	36.5		4.5	34.7	
Effective Green, g (s)		12.0			12.0		6.3	36.5		4.5	34.7	
Actuated g/C Ratio		0.18			0.18		0.09	0.54		0.07	0.51	
Clearance Time (s)		5.0			5.0		5.0	5.0		5.0	5.0	
Vehicle Extension (s)		2.0			2.0		2.0	2.0		2.0	2.0	
Lane Grp Cap (vph)		243			240		163	1835		117	1787	
v/s Ratio Prot							0.03			c0.03	0.16	
v/s Ratio Perm		c0.10			0.06			c0.20				
v/c Ratio		0.55			0.33		0.28	0.36		0.44	0.31	
Uniform Delay, d1		25.5			24.5		28.7	9.1		30.5	9.7	
Progression Factor		1.00			1.00		1.00	1.00		1.00	1.00	
Incremental Delay, d2		1.4			0.3		0.3	0.6		0.9	0.4	
Delay (s)		26.9			24.8		29.1	9.6		31.5	10.1	
Level of Service		C			C		C	A		C	B	
Approach Delay (s)		26.9			24.8			10.8			11.9	
Approach LOS		C			C			B			B	

Intersection Summary			
HCM 2000 Control Delay	14.0	HCM 2000 Level of Service	B
HCM 2000 Volume to Capacity ratio	0.41		
Actuated Cycle Length (s)	68.0	Sum of lost time (s)	15.0
Intersection Capacity Utilization	50.6%	ICU Level of Service	A
Analysis Period (min)	15		
c Critical Lane Group			

Movement	EBL	EBT	WBT	WBR	SBL	SBR
Lane Configurations						
Volume (vph)	149	663	342	291	460	221
Ideal Flow (vphpl)	1900	1900	1900	1900	1900	1900
Total Lost time (s)	5.0	5.0	5.0	5.0	5.0	5.0
Lane Util. Factor	1.00	0.95	0.95	1.00	0.97	0.91
Frpb, ped/bikes	1.00	1.00	1.00	0.97	1.00	0.98
Flpb, ped/bikes	1.00	1.00	1.00	1.00	0.99	1.00
Frt	1.00	1.00	1.00	0.85	0.99	0.85
Flt Protected	0.95	1.00	1.00	1.00	0.95	1.00
Satd. Flow (prot)	1593	3185	3185	1378	3040	1271
Flt Permitted	0.95	1.00	1.00	1.00	0.95	1.00
Satd. Flow (perm)	1593	3185	3185	1378	3040	1271
Peak-hour factor, PHF	0.95	0.95	0.95	0.95	0.95	0.95
Growth Factor (vph)	106%	150%	150%	150%	106%	106%
Adj. Flow (vph)	166	1047	540	459	513	247
RTOR Reduction (vph)	0	0	0	330	4	161
Lane Group Flow (vph)	166	1047	540	129	534	61
Confl. Peds. (#/hr)	10			10	10	10
Turn Type	Prot	NA	NA	Perm	Perm	Perm
Protected Phases	7	4	8			
Permitted Phases				8	6	6
Actuated Green, G (s)	11.5	33.2	16.7	16.7	16.3	16.3
Effective Green, g (s)	11.5	33.2	16.7	16.7	16.3	16.3
Actuated g/C Ratio	0.19	0.56	0.28	0.28	0.27	0.27
Clearance Time (s)	5.0	5.0	5.0	5.0	5.0	5.0
Vehicle Extension (s)	2.0	2.0	2.0	2.0	2.0	2.0
Lane Grp Cap (vph)	307	1777	893	386	832	348
v/s Ratio Prot	0.10	c0.33	0.17			
v/s Ratio Perm				0.09	c0.18	0.05
v/c Ratio	0.54	0.59	0.60	0.33	0.64	0.17
Uniform Delay, d1	21.6	8.7	18.5	17.0	19.0	16.5
Progression Factor	1.00	1.00	1.00	1.00	1.00	1.00
Incremental Delay, d2	1.0	0.3	0.8	0.2	1.3	0.1
Delay (s)	22.7	9.0	19.3	17.2	20.3	16.6
Level of Service	C	A	B	B	C	B
Approach Delay (s)		10.9	18.3		19.2	
Approach LOS		B	B		B	

Intersection Summary			
HCM 2000 Control Delay	15.5	HCM 2000 Level of Service	B
HCM 2000 Volume to Capacity ratio	0.67		
Actuated Cycle Length (s)	59.5	Sum of lost time (s)	15.0
Intersection Capacity Utilization	57.5%	ICU Level of Service	B
Analysis Period (min)	15		
c Critical Lane Group			

Movement	EBL	EBT	EBR	WBL	WBT	WBR	NBL	NBT	NBR	SBL	SBT	SBR
Lane Configurations												
Volume (vph)	56	931	35	38	523	49	24	4	24	102	7	50
Ideal Flow (vphpl)	1900	1900	1900	1900	1900	1900	1900	1900	1900	1900	1900	1900
Total Lost time (s)	5.0	5.0		5.0	5.0			5.0	5.0		5.0	5.0
Lane Util. Factor	1.00	0.95		1.00	0.95			1.00	1.00		1.00	1.00
Frpb, ped/bikes	1.00	1.00		1.00	1.00			1.00	0.98		1.00	0.98
Flpb, ped/bikes	1.00	1.00		1.00	1.00			0.99	1.00		0.99	1.00
Frt	1.00	0.99		1.00	0.99			1.00	0.85		1.00	0.85
Flt Protected	0.95	1.00		0.95	1.00			0.96	1.00		0.96	1.00
Satd. Flow (prot)	1770	3515		1770	3483			1776	1552		1767	1552
Flt Permitted	0.95	1.00		0.95	1.00			0.69	1.00		0.71	1.00
Satd. Flow (perm)	1770	3515		1770	3483			1274	1552		1308	1552
Peak-hour factor, PHF	0.94	0.94	0.94	0.94	0.94	0.94	0.94	0.94	0.94	0.94	0.94	0.94
Growth Factor (vph)	150%	150%	150%	150%	150%	150%	150%	150%	150%	150%	150%	150%
Adj. Flow (vph)	89	1486	56	61	835	78	38	6	38	163	11	80
RTOR Reduction (vph)	0	2	0	0	5	0	0	0	30	0	0	63
Lane Group Flow (vph)	89	1540	0	61	908	0	0	44	8	0	174	17
Confl. Peds. (#/hr)	10		10	10		10	10		10	10		10
Turn Type	Prot	NA		Prot	NA		Perm	NA	Perm	Perm	NA	Perm
Protected Phases	7	4		3	8			2			6	
Permitted Phases							2		2	6		6
Actuated Green, G (s)	6.2	28.9		4.2	26.9			12.9	12.9		12.9	12.9
Effective Green, g (s)	6.2	28.9		4.2	26.9			12.9	12.9		12.9	12.9
Actuated g/C Ratio	0.10	0.47		0.07	0.44			0.21	0.21		0.21	0.21
Clearance Time (s)	5.0	5.0		5.0	5.0			5.0	5.0		5.0	5.0
Vehicle Extension (s)	2.0	2.0		2.0	2.0			2.0	2.0		2.0	2.0
Lane Grp Cap (vph)	179	1665		121	1535			269	328		276	328
v/s Ratio Prot	c0.05	c0.44		0.03	0.26							
v/s Ratio Perm								0.03	0.01		c0.13	0.01
v/c Ratio	0.50	0.92		0.50	0.59			0.16	0.02		0.63	0.05
Uniform Delay, d1	25.9	15.0		27.4	12.9			19.6	19.1		21.9	19.2
Progression Factor	1.00	1.00		1.00	1.00			1.00	1.00		1.00	1.00
Incremental Delay, d2	0.8	9.0		1.2	0.4			0.1	0.0		3.4	0.0
Delay (s)	26.7	24.0		28.6	13.3			19.7	19.1		25.3	19.2
Level of Service	C	C		C	B			B	B		C	B
Approach Delay (s)		24.2			14.3			19.4			23.4	
Approach LOS		C			B			B			C	

Intersection Summary			
HCM 2000 Control Delay	20.7	HCM 2000 Level of Service	C
HCM 2000 Volume to Capacity ratio	0.82		
Actuated Cycle Length (s)	61.0	Sum of lost time (s)	15.0
Intersection Capacity Utilization	72.8%	ICU Level of Service	C
Analysis Period (min)	15		
c Critical Lane Group			

Movement	WBL	WBR	NBT	NBR	SBL	SBT
Lane Configurations						
Volume (veh/h)	30	75	695	75	80	680
Sign Control	Stop		Free			Free
Grade	0%		0%			0%
Peak Hour Factor	0.88	0.88	0.88	0.88	0.88	0.88
Hourly flow rate (vph)	34	85	790	85	91	773
Pedestrians						
Lane Width (ft)						
Walking Speed (ft/s)						
Percent Blockage						
Right turn flare (veh)						
Median type			None			None
Median storage veh)						
Upstream signal (ft)			1175			441
pX, platoon unblocked	0.81	1.00			1.00	
vC, conflicting volume	1744	395			875	
vC1, stage 1 conf vol						
vC2, stage 2 conf vol						
vCu, unblocked vol	1789	388			870	
tC, single (s)	6.8	6.9			4.1	
tC, 2 stage (s)						
tF (s)	3.5	3.3			2.2	
p0 queue free %	34	86			88	
cM capacity (veh/h)	52	609			769	

Direction, Lane #	WB 1	NB 1	NB 2	NB 3	SB 1	SB 2
Volume Total	119	395	395	85	91	773
Volume Left	34	0	0	0	91	0
Volume Right	85	0	0	85	0	0
cSH	150	1700	1700	1700	769	1700
Volume to Capacity	0.80	0.23	0.23	0.05	0.12	0.45
Queue Length 95th (ft)	126	0	0	0	10	0
Control Delay (s)	86.6	0.0	0.0	0.0	10.3	0.0
Lane LOS	F				B	
Approach Delay (s)	86.6	0.0			1.1	
Approach LOS	F					

Intersection Summary			
Average Delay	6.1		
Intersection Capacity Utilization	48.7%	ICU Level of Service	A
Analysis Period (min)	15		

Movement	EBL	EBT	EBR	WBL	WBT	WBR	NBL	NBT	NBR	SBL	SBT	SBR
Lane Configurations												
Sign Control		Stop			Stop			Stop			Stop	
Volume (vph)	218	22	5	1	15	39	4	107	3	32	151	241
Peak Hour Factor	0.86	0.86	0.86	0.86	0.86	0.86	0.86	0.86	0.86	0.86	0.86	0.86
Hourly flow rate (vph)	304	31	7	1	21	54	6	149	3	45	211	336

Direction, Lane #	EB 1	WB 1	NB 1	SB 1
Volume Total (vph)	342	77	158	592
Volume Left (vph)	304	1	6	45
Volume Right (vph)	7	54	3	336
Hadj (s)	0.20	-0.39	0.03	-0.29
Departure Headway (s)	6.4	6.5	6.4	5.3
Degree Utilization, x	0.61	0.14	0.28	0.88
Capacity (veh/h)	539	494	524	664
Control Delay (s)	18.8	10.6	11.9	34.1
Approach Delay (s)	18.8	10.6	11.9	34.1
Approach LOS	C	B	B	D

Intersection Summary			
Delay	25.1		
Level of Service	D		
Intersection Capacity Utilization	69.5%	ICU Level of Service	C
Analysis Period (min)	15		

Movement	NBL	NBT	SBT	SBR	SEL	SER
Lane Configurations						
Volume (veh/h)	5	735	800	50	35	25
Sign Control		Free	Free		Stop	
Grade		0%	0%		0%	
Peak Hour Factor	0.92	0.92	0.92	0.92	0.92	0.92
Hourly flow rate (vph)	5	799	870	54	38	27
Pedestrians						
Lane Width (ft)						
Walking Speed (ft/s)						
Percent Blockage						
Right turn flare (veh)						
Median type		None	None			
Median storage veh)						
Upstream signal (ft)		748	431			
pX, platoon unblocked	0.64				0.75	0.64
vC, conflicting volume	924				1707	897
vC1, stage 1 conf vol						
vC2, stage 2 conf vol						
vCu, unblocked vol	607				1159	564
tC, single (s)	4.1				6.4	6.2
tC, 2 stage (s)						
tF (s)	2.2				3.5	3.3
p0 queue free %	99				76	92
cM capacity (veh/h)	626				160	338

Direction, Lane #	NB 1	NB 2	SB 1	SE 1
Volume Total	5	799	924	65
Volume Left	5	0	0	38
Volume Right	0	0	54	27
cSH	626	1700	1700	205
Volume to Capacity	0.01	0.47	0.54	0.32
Queue Length 95th (ft)	1	0	0	32
Control Delay (s)	10.8	0.0	0.0	30.5
Lane LOS	B			D
Approach Delay (s)	0.1		0.0	30.5
Approach LOS				D

Intersection Summary			
Average Delay	1.1		
Intersection Capacity Utilization	55.3%	ICU Level of Service	B
Analysis Period (min)	15		

Morena Blvd Station Area Planning Study

Appendix E:

LOS Reports - Preferred Alternative

Long-term

Movement	WBL	WBR	NBT	NBR	SBL	SBT
Lane Configurations						
Volume (vph)	28	58	384	41	123	540
Ideal Flow (vphpl)	1900	1900	1900	1900	1900	1900
Total Lost time (s)	5.0		5.0		5.5	5.0
Lane Util. Factor	1.00		0.95		1.00	0.95
Frpb, ped/bikes	0.99		1.00		1.00	1.00
Flpb, ped/bikes	1.00		1.00		1.00	1.00
Frt	0.91		0.98		1.00	1.00
Flt Protected	0.98		1.00		0.95	1.00
Satd. Flow (prot)	1653		3289		1770	3539
Flt Permitted	0.98		1.00		0.95	1.00
Satd. Flow (perm)	1653		3289		1770	3539
Peak-hour factor, PHF	0.92	0.92	0.92	0.92	0.92	0.92
Growth Factor (vph)	120%	100%	102%	125%	100%	105%
Adj. Flow (vph)	37	63	426	56	134	616
RTOR Reduction (vph)	55	0	9	0	0	0
Lane Group Flow (vph)	45	0	473	0	134	616
Confl. Peds. (#/hr)	10	10		10	10	
Parking (#/hr)			0			
Turn Type	Prot		NA		Prot	NA
Protected Phases	8		2		1	6
Permitted Phases						
Actuated Green, G (s)	7.7		31.5		7.6	44.6
Effective Green, g (s)	7.7		31.5		7.6	44.6
Actuated g/C Ratio	0.12		0.51		0.12	0.72
Clearance Time (s)	5.0		5.0		5.5	5.0
Vehicle Extension (s)	2.0		2.0		2.0	2.0
Lane Grp Cap (vph)	204		1662		215	2533
v/s Ratio Prot	c0.03		c0.14		c0.08	0.17
v/s Ratio Perm						
v/c Ratio	0.22		0.28		0.62	0.24
Uniform Delay, d1	24.6		8.9		26.0	3.0
Progression Factor	1.00		1.00		1.00	1.00
Incremental Delay, d2	0.2		0.4		4.0	0.2
Delay (s)	24.8		9.3		30.0	3.3
Level of Service	C		A		C	A
Approach Delay (s)	24.8		9.3			8.0
Approach LOS	C		A			A

Intersection Summary			
HCM 2000 Control Delay	9.8	HCM 2000 Level of Service	A
HCM 2000 Volume to Capacity ratio	0.33		
Actuated Cycle Length (s)	62.3	Sum of lost time (s)	15.5
Intersection Capacity Utilization	44.2%	ICU Level of Service	A
Analysis Period (min)	15		

c Critical Lane Group

Movement	EBL	EBT	EBR	WBL	WBT	WBR	NBL	NBT	NBR	SBL	SBT	SBR
Lane Configurations												
Volume (vph)	97	721	0	0	663	352	117	0	787	0	0	0
Ideal Flow (vphpl)	1900	1900	1900	1900	1900	1900	1900	1900	1900	1900	1900	1900
Total Lost time (s)	5.5	5.5			5.5	5.5	5.5		5.5			
Lane Util. Factor	1.00	0.95			0.95	1.00	1.00		1.00			
Frpb, ped/bikes	1.00	1.00			1.00	0.95	1.00		0.98			
Flpb, ped/bikes	1.00	1.00			1.00	1.00	1.00		1.00			
Frt	1.00	1.00			1.00	0.85	1.00		0.85			
Flt Protected	0.95	1.00			1.00	1.00	0.95		1.00			
Satd. Flow (prot)	1593	3185			3185	1356	1593		1397			
Flt Permitted	0.95	1.00			1.00	1.00	0.95		1.00			
Satd. Flow (perm)	1593	3185			3185	1356	1593		1397			
Peak-hour factor, PHF	0.96	0.96	0.96	0.96	0.96	0.96	0.96	0.96	0.96	0.96	0.96	0.96
Growth Factor (vph)	120%	110%	120%	120%	120%	120%	120%	120%	120%	120%	120%	120%
Adj. Flow (vph)	121	826	0	0	829	440	146	0	984	0	0	0
RTOR Reduction (vph)	0	0	0	0	0	276	0	0	0	0	0	0
Lane Group Flow (vph)	121	826	0	0	829	164	146	0	984	0	0	0
Confl. Peds. (#/hr)	10		10	10		10	10		10	10		10
Turn Type	Prot	NA			NA	Perm	Prot		custom			
Protected Phases	7	4			8		2		2			
Permitted Phases						8			4			
Actuated Green, G (s)	8.1	39.4			25.8	25.8	19.0		58.4			
Effective Green, g (s)	8.1	39.4			25.8	25.8	19.0		58.4			
Actuated g/C Ratio	0.12	0.57			0.37	0.37	0.27		0.84			
Clearance Time (s)	5.5	5.5			5.5	5.5	5.5		5.5			
Vehicle Extension (s)	2.0	2.0			2.0	2.0	2.0		2.0			
Lane Grp Cap (vph)	185	1808			1184	504	436		1397			
v/s Ratio Prot	0.08	0.26			0.26		0.09		c0.19			
v/s Ratio Perm						0.12			0.51			
v/c Ratio	0.65	0.46			0.70	0.32	0.33		0.70			
Uniform Delay, d1	29.3	8.8			18.5	15.6	20.1		2.1			
Progression Factor	1.00	1.00			1.00	1.00	1.00		1.00			
Incremental Delay, d2	6.2	0.1			1.5	0.1	0.2		1.3			
Delay (s)	35.5	8.8			20.1	15.7	20.3		3.5			
Level of Service	D	A			C	B	C		A			
Approach Delay (s)		12.2			18.6			5.7			0.0	
Approach LOS		B			B			A			A	

Intersection Summary			
HCM 2000 Control Delay	12.4	HCM 2000 Level of Service	B
HCM 2000 Volume to Capacity ratio	0.92		
Actuated Cycle Length (s)	69.4	Sum of lost time (s)	16.5
Intersection Capacity Utilization	99.5%	ICU Level of Service	F
Analysis Period (min)	15		
c Critical Lane Group			

Movement	WBL	WBR	NBT	NBR	SBL	SBT
Lane Configurations						
Volume (vph)	175	23	398	175	30	530
Ideal Flow (vphpl)	1900	1900	1900	1900	1900	1900
Total Lost time (s)	5.0	5.0	5.0	5.0	5.0	5.0
Lane Util. Factor	1.00	1.00	0.95	1.00	1.00	1.00
Frpb, ped/bikes	1.00	0.98	1.00	0.96	1.00	1.00
Flpb, ped/bikes	1.00	1.00	1.00	1.00	1.00	1.00
Frt	1.00	0.85	1.00	0.85	1.00	1.00
Flt Protected	0.95	1.00	1.00	1.00	0.95	1.00
Satd. Flow (prot)	1593	1395	3185	1369	1593	1676
Flt Permitted	0.95	1.00	1.00	1.00	0.95	1.00
Satd. Flow (perm)	1593	1395	3185	1369	1593	1676
Peak-hour factor, PHF	0.97	0.97	0.97	0.97	0.97	0.97
Growth Factor (vph)	115%	300%	110%	120%	120%	100%
Adj. Flow (vph)	207	71	451	216	37	546
RTOR Reduction (vph)	0	54	0	109	0	0
Lane Group Flow (vph)	207	17	451	107	37	546
Confl. Peds. (#/hr)	10	10		10	10	
Turn Type	Prot	Perm	NA	Perm	Prot	NA
Protected Phases	8		2		1	6
Permitted Phases		8		2		
Actuated Green, G (s)	16.0	16.0	32.9	32.9	2.7	40.6
Effective Green, g (s)	16.0	16.0	32.9	32.9	2.7	40.6
Actuated g/C Ratio	0.24	0.24	0.49	0.49	0.04	0.61
Clearance Time (s)	5.0	5.0	5.0	5.0	5.0	5.0
Vehicle Extension (s)	2.0	2.0	2.0	2.0	2.0	2.0
Lane Grp Cap (vph)	382	335	1573	676	64	1021
v/s Ratio Prot	c0.13		0.14		0.02	c0.33
v/s Ratio Perm		0.01		0.08		
v/c Ratio	0.54	0.05	0.29	0.16	0.58	0.53
Uniform Delay, d1	22.1	19.5	9.9	9.2	31.4	7.5
Progression Factor	1.00	1.00	1.00	1.00	1.00	1.00
Incremental Delay, d2	0.8	0.0	0.5	0.5	7.6	2.0
Delay (s)	22.9	19.5	10.4	9.7	39.0	9.5
Level of Service	C	B	B	A	D	A
Approach Delay (s)	22.1		10.2			11.4
Approach LOS	C		B			B

Intersection Summary			
HCM 2000 Control Delay	12.8	HCM 2000 Level of Service	B
HCM 2000 Volume to Capacity ratio	0.59		
Actuated Cycle Length (s)	66.6	Sum of lost time (s)	15.0
Intersection Capacity Utilization	53.4%	ICU Level of Service	A
Analysis Period (min)	15		
c Critical Lane Group			

Movement	EBL	EBT	EBR	WBL	WBT	WBR	NBL	NBT	NBR	SBL	SBT	SBR
Lane Configurations												
Volume (vph)	186	984	282	117	643	47	209	14	152	83	14	144
Ideal Flow (vphpl)	1900	1900	1900	1900	1900	1900	1900	1900	1900	1900	1900	1900
Total Lost time (s)	5.0	5.0	5.0	5.0	5.0		5.0	5.0		5.0	5.0	
Lane Util. Factor	1.00	0.95	1.00	1.00	0.95		1.00	1.00		1.00	1.00	
Frpb, ped/bikes	1.00	1.00	0.95	1.00	1.00		1.00	0.98		1.00	0.98	
Flpb, ped/bikes	1.00	1.00	1.00	1.00	1.00		0.99	1.00		0.99	1.00	
Frt	1.00	1.00	0.85	1.00	0.99		1.00	0.86		1.00	0.86	
Flt Protected	0.95	1.00	1.00	0.95	1.00		0.95	1.00		0.95	1.00	
Satd. Flow (prot)	1593	3185	1360	1593	3143		1583	1420		1583	1421	
Flt Permitted	0.95	1.00	1.00	0.95	1.00		0.57	1.00		0.55	1.00	
Satd. Flow (perm)	1593	3185	1360	1593	3143		942	1420		916	1421	
Peak-hour factor, PHF	0.95	0.95	0.95	0.95	0.95	0.95	0.95	0.95	0.95	0.95	0.95	0.95
Growth Factor (vph)	120%	120%	120%	120%	120%	120%	120%	120%	120%	120%	120%	120%
Adj. Flow (vph)	235	1243	356	148	812	59	264	18	192	105	18	182
RTOR Reduction (vph)	0	0	163	0	5	0	0	135	0	0	128	0
Lane Group Flow (vph)	235	1243	193	148	866	0	264	75	0	105	72	0
Confl. Peds. (#/hr)	10		10	10		10	10		10	10		10
Turn Type	Prot	NA	Perm	Prot	NA		Perm	NA		Perm	NA	
Protected Phases	7	4		3	8			2			6	
Permitted Phases			4				2			6		
Actuated Green, G (s)	15.2	35.4	35.4	11.9	32.1		26.4	26.4		26.4	26.4	
Effective Green, g (s)	15.2	35.4	35.4	11.9	32.1		26.4	26.4		26.4	26.4	
Actuated g/C Ratio	0.17	0.40	0.40	0.13	0.36		0.30	0.30		0.30	0.30	
Clearance Time (s)	5.0	5.0	5.0	5.0	5.0		5.0	5.0		5.0	5.0	
Vehicle Extension (s)	2.0	2.0	2.0	2.0	2.0		2.0	2.0		2.0	2.0	
Lane Grp Cap (vph)	272	1271	542	213	1137		280	422		272	422	
v/s Ratio Prot	c0.15	c0.39		0.09	0.28			0.05			0.05	
v/s Ratio Perm			0.14				c0.28			0.11		
v/c Ratio	0.86	0.98	0.36	0.69	0.76		0.94	0.18		0.39	0.17	
Uniform Delay, d1	35.7	26.3	18.7	36.7	24.9		30.4	23.1		24.7	23.1	
Progression Factor	1.00	1.00	1.00	1.00	1.00		1.00	1.00		1.00	1.00	
Incremental Delay, d2	22.9	19.8	0.1	7.7	2.8		38.1	0.1		0.3	0.1	
Delay (s)	58.6	46.1	18.8	44.4	27.7		68.5	23.2		25.1	23.1	
Level of Service	E	D	B	D	C		E	C		C	C	
Approach Delay (s)		42.4			30.1			48.4			23.8	
Approach LOS		D			C			D			C	

Intersection Summary			
HCM 2000 Control Delay	38.2	HCM 2000 Level of Service	D
HCM 2000 Volume to Capacity ratio	0.98		
Actuated Cycle Length (s)	88.7	Sum of lost time (s)	15.0
Intersection Capacity Utilization	94.2%	ICU Level of Service	F
Analysis Period (min)	15		
c Critical Lane Group			

Movement	WBL	WBR	NBT	NBR	SBL	SBT
Lane Configurations						
Volume (vph)	54	88	544	73	37	640
Ideal Flow (vphpl)	1900	1900	1900	1900	1900	1900
Total Lost time (s)	5.5		5.5		5.5	5.5
Lane Util. Factor	1.00		1.00		1.00	1.00
Frpb, ped/bikes	0.99		1.00		1.00	1.00
Flpb, ped/bikes	1.00		1.00		1.00	1.00
Frt	0.92		0.98		1.00	1.00
Flt Protected	0.98		1.00		0.95	1.00
Satd. Flow (prot)	1653		1825		1770	1863
Flt Permitted	0.98		1.00		0.95	1.00
Satd. Flow (perm)	1653		1825		1770	1863
Peak-hour factor, PHF	0.97	0.97	0.97	0.97	0.97	0.97
Growth Factor (vph)	100%	100%	100%	100%	105%	105%
Adj. Flow (vph)	56	91	561	75	40	693
RTOR Reduction (vph)	80	0	5	0	0	0
Lane Group Flow (vph)	67	0	631	0	40	693
Confl. Peds. (#/hr)	10	10		10	10	
Turn Type	Prot		NA		Prot	NA
Protected Phases	8		2		1	6
Permitted Phases						
Actuated Green, G (s)	6.3		28.6		1.3	35.4
Effective Green, g (s)	6.3		28.6		1.3	35.4
Actuated g/C Ratio	0.12		0.54		0.02	0.67
Clearance Time (s)	5.5		5.5		5.5	5.5
Vehicle Extension (s)	2.0		2.0		2.0	2.0
Lane Grp Cap (vph)	197		990		43	1251
v/s Ratio Prot	c0.04		c0.35		0.02	c0.37
v/s Ratio Perm						
v/c Ratio	0.34		0.64		0.93	0.55
Uniform Delay, d1	21.3		8.4		25.7	4.5
Progression Factor	1.00		1.00		1.00	1.00
Incremental Delay, d2	0.4		1.0		109.0	0.3
Delay (s)	21.7		9.4		134.7	4.8
Level of Service	C		A		F	A
Approach Delay (s)	21.7		9.4			11.9
Approach LOS	C		A			B

Intersection Summary			
HCM 2000 Control Delay	11.8	HCM 2000 Level of Service	B
HCM 2000 Volume to Capacity ratio	0.63		
Actuated Cycle Length (s)	52.7	Sum of lost time (s)	16.5
Intersection Capacity Utilization	55.0%	ICU Level of Service	B
Analysis Period (min)	15		
c Critical Lane Group			

Movement	WBL	WBR	NBT	NBR	SBL	SBT
Lane Configurations						
Volume (vph)	51	29	576	81	36	670
Ideal Flow (vphpl)	1900	1900	1900	1900	1900	1900
Total Lost time (s)	5.5		5.5		5.5	5.5
Lane Util. Factor	1.00		1.00		1.00	1.00
Frpb, ped/bikes	0.99		1.00		1.00	1.00
Flpb, ped/bikes	1.00		1.00		1.00	1.00
Frt	0.95		0.98		1.00	1.00
Flt Protected	0.97		1.00		0.95	1.00
Satd. Flow (prot)	1694		1824		1770	1863
Flt Permitted	0.97		1.00		0.95	1.00
Satd. Flow (perm)	1694		1824		1770	1863
Peak-hour factor, PHF	0.97	0.97	0.97	0.97	0.97	0.97
Growth Factor (vph)	100%	100%	102%	102%	103%	103%
Adj. Flow (vph)	53	30	606	85	38	711
RTOR Reduction (vph)	27	0	5	0	0	0
Lane Group Flow (vph)	56	0	686	0	38	711
Confl. Peds. (#/hr)	10	10		10	10	
Turn Type	Prot		NA		Prot	NA
Protected Phases	8		2		1	6
Permitted Phases						
Actuated Green, G (s)	6.3		34.1		1.4	41.0
Effective Green, g (s)	6.3		34.1		1.4	41.0
Actuated g/C Ratio	0.11		0.58		0.02	0.70
Clearance Time (s)	5.5		5.5		5.5	5.5
Vehicle Extension (s)	2.0		2.0		2.0	2.0
Lane Grp Cap (vph)	183		1066		42	1310
v/s Ratio Prot	c0.03		c0.38		0.02	c0.38
v/s Ratio Perm						
v/c Ratio	0.31		0.64		0.90	0.54
Uniform Delay, d1	24.0		8.1		28.4	4.2
Progression Factor	1.00		1.00		1.00	1.00
Incremental Delay, d2	0.3		1.0		100.1	0.2
Delay (s)	24.3		9.1		128.5	4.4
Level of Service	C		A		F	A
Approach Delay (s)	24.3		9.1			10.7
Approach LOS	C		A			B

Intersection Summary			
HCM 2000 Control Delay	10.7	HCM 2000 Level of Service	B
HCM 2000 Volume to Capacity ratio	0.63		
Actuated Cycle Length (s)	58.3	Sum of lost time (s)	16.5
Intersection Capacity Utilization	53.1%	ICU Level of Service	A
Analysis Period (min)	15		
c Critical Lane Group			

Movement	NBT	NBR	SBL	SBT	NWL	NWR
Lane Configurations						
Volume (vph)	387	26	191	501	15	313
Ideal Flow (vphpl)	1900	1900	1900	1900	1900	1900
Total Lost time (s)	5.5		5.5	5.5	5.5	5.5
Lane Util. Factor	1.00		1.00	1.00	1.00	1.00
Frpb, ped/bikes	1.00		1.00	1.00	1.00	0.97
Flpb, ped/bikes	1.00		1.00	1.00	1.00	1.00
Frt	0.99		1.00	1.00	1.00	0.85
Flt Protected	1.00		0.95	1.00	0.95	1.00
Satd. Flow (prot)	1843		1770	1863	1770	1529
Flt Permitted	1.00		0.95	1.00	0.95	1.00
Satd. Flow (perm)	1843		1770	1863	1770	1529
Peak-hour factor, PHF	0.99	0.99	0.99	0.99	0.99	0.99
Growth Factor (vph)	100%	100%	99%	100%	200%	102%
Adj. Flow (vph)	391	26	191	506	30	322
RTOR Reduction (vph)	3	0	0	0	0	273
Lane Group Flow (vph)	414	0	191	506	30	49
Confl. Peds. (#/hr)		10	10		10	10
Turn Type	NA		Prot	NA	Prot	Perm
Protected Phases	2		1	6	8	
Permitted Phases						8
Actuated Green, G (s)	16.8		7.9	30.2	7.4	7.4
Effective Green, g (s)	16.8		7.9	30.2	7.4	7.4
Actuated g/C Ratio	0.35		0.16	0.62	0.15	0.15
Clearance Time (s)	5.5		5.5	5.5	5.5	5.5
Vehicle Extension (s)	2.0		2.0	2.0	2.0	2.0
Lane Grp Cap (vph)	637		287	1157	269	232
v/s Ratio Prot	c0.22		c0.11	0.27	0.02	
v/s Ratio Perm						c0.03
v/c Ratio	0.65		0.67	0.44	0.11	0.21
Uniform Delay, d1	13.4		19.1	4.8	17.8	18.0
Progression Factor	1.00		1.00	1.00	1.00	1.00
Incremental Delay, d2	1.7		4.5	0.1	0.1	0.2
Delay (s)	15.1		23.6	4.9	17.8	18.2
Level of Service	B		C	A	B	B
Approach Delay (s)	15.1			10.0	18.2	
Approach LOS	B			B	B	

Intersection Summary			
HCM 2000 Control Delay	13.4	HCM 2000 Level of Service	B
HCM 2000 Volume to Capacity ratio	0.55		
Actuated Cycle Length (s)	48.6	Sum of lost time (s)	16.5
Intersection Capacity Utilization	52.6%	ICU Level of Service	A
Analysis Period (min)	15		
c Critical Lane Group			

Movement	EBL	EBT	EBR	WBL	WBT	WBR	NBL	NBT	NBR	SBL	SBT	SBR
Lane Configurations												
Volume (vph)	50	50	100	125	100	25	25	390	240	10	275	50
Ideal Flow (vphpl)	1900	1900	1900	1900	1900	1900	1900	1900	1900	1900	1900	1900
Total Lost time (s)		5.0			5.0	5.0		5.0	5.0		5.0	
Lane Util. Factor		1.00			1.00	1.00		1.00	1.00		1.00	
Frpb, ped/bikes		0.99			1.00	0.96		1.00	0.96		0.99	
Flpb, ped/bikes		1.00			1.00	1.00		1.00	1.00		1.00	
Frt		0.93			1.00	0.85		1.00	0.85		0.98	
Flt Protected		0.99			0.97	1.00		1.00	1.00		1.00	
Satd. Flow (prot)		1691			1805	1522		1856	1521		1811	
Flt Permitted		0.82			0.68	1.00		0.97	1.00		0.99	
Satd. Flow (perm)		1399			1258	1522		1805	1521		1792	
Peak-hour factor, PHF	0.97	0.97	0.97	0.97	0.97	0.97	0.97	0.97	0.97	0.97	0.97	0.97
Adj. Flow (vph)	52	52	103	129	103	26	26	402	247	10	284	52
RTOR Reduction (vph)	0	60	0	0	0	20	0	0	95	0	7	0
Lane Group Flow (vph)	0	147	0	0	232	6	0	428	152	0	339	0
Confl. Peds. (#/hr)	10		10	10		10	10		10	10		10
Turn Type	Perm	NA		Perm	NA	Perm	Perm	NA	Perm	Perm	NA	
Protected Phases		2			6			8			4	
Permitted Phases	2			6		6	8		8	4		
Actuated Green, G (s)		16.1			16.1	16.1		41.9	41.9		41.9	
Effective Green, g (s)		16.1			16.1	16.1		41.9	41.9		41.9	
Actuated g/C Ratio		0.24			0.24	0.24		0.62	0.62		0.62	
Clearance Time (s)		5.0			5.0	5.0		5.0	5.0		5.0	
Vehicle Extension (s)		2.0			2.0	2.0		2.0	2.0		2.0	
Lane Grp Cap (vph)		331			297	360		1112	937		1104	
v/s Ratio Prot												
v/s Ratio Perm		0.10			c0.18	0.00		c0.24	0.10		0.19	
v/c Ratio		0.44			0.78	0.02		0.38	0.16		0.31	
Uniform Delay, d1		22.1			24.3	19.9		6.6	5.6		6.2	
Progression Factor		1.00			1.00	1.00		1.00	1.00		1.00	
Incremental Delay, d2		0.3			11.6	0.0		1.0	0.4		0.7	
Delay (s)		22.5			35.9	19.9		7.6	5.9		6.9	
Level of Service		C			D	B		A	A		A	
Approach Delay (s)		22.5			34.3			7.0			6.9	
Approach LOS		C			C			A			A	

Intersection Summary			
HCM 2000 Control Delay	13.9	HCM 2000 Level of Service	B
HCM 2000 Volume to Capacity ratio	0.49		
Actuated Cycle Length (s)	68.0	Sum of lost time (s)	10.0
Intersection Capacity Utilization	64.5%	ICU Level of Service	C
Analysis Period (min)	15		

c Critical Lane Group

Movement	EBL	EBT	EBR	WBL	WBT	WBR	NBL	NBT	NBR	SBL	SBT	SBR
Lane Configurations												
Volume (vph)	420	70	450	25	70	30	490	205	25	20	150	330
Ideal Flow (vphpl)	1900	1900	1900	1900	1900	1900	1900	1900	1900	1900	1900	1900
Total Lost time (s)	5.0	5.5	5.5	5.0	5.0		5.5	5.5			5.5	5.5
Lane Util. Factor	0.97	1.00	1.00	1.00	1.00		0.91	0.91			0.95	0.95
Frpb, ped/bikes	1.00	1.00	0.96	1.00	0.99		1.00	1.00			0.99	0.97
Flpb, ped/bikes	1.00	1.00	1.00	1.00	1.00		1.00	1.00			1.00	1.00
Frt	1.00	1.00	0.85	1.00	0.95		1.00	0.99			0.95	0.85
Flt Protected	0.95	1.00	1.00	0.95	1.00		0.95	0.97			1.00	1.00
Satd. Flow (prot)	3433	1863	1518	1770	1763		1610	3273			1654	1465
Flt Permitted	0.95	1.00	1.00	0.95	1.00		0.95	0.97			1.00	1.00
Satd. Flow (perm)	3433	1863	1518	1770	1763		1610	3273			1654	1465
Peak-hour factor, PHF	0.91	0.91	0.91	0.91	0.91	0.91	0.91	0.91	0.91	0.91	0.91	0.91
Adj. Flow (vph)	462	77	495	27	77	33	538	225	27	22	165	363
RTOR Reduction (vph)	0	0	372	0	17	0	0	3	0	0	19	207
Lane Group Flow (vph)	462	77	123	27	93	0	269	518	0	0	270	54
Confl. Peds. (#/hr)	10		10	10		10	10		10	10		10
Turn Type	Prot	NA	Perm	Prot	NA		Split	NA		Split	NA	Perm
Protected Phases	7	4		3	8		2	2		6	6	
Permitted Phases			4									6
Actuated Green, G (s)	15.9	24.8	24.8	2.8	12.2		30.1	30.1			20.8	20.8
Effective Green, g (s)	15.9	24.8	24.8	2.8	12.2		30.1	30.1			20.8	20.8
Actuated g/C Ratio	0.16	0.25	0.25	0.03	0.12		0.30	0.30			0.21	0.21
Clearance Time (s)	5.0	5.5	5.5	5.0	5.0		5.5	5.5			5.5	5.5
Vehicle Extension (s)	2.0	2.0	2.0	2.0	2.0		2.0	2.0			2.0	2.0
Lane Grp Cap (vph)	545	462	376	49	215		484	985			344	304
v/s Ratio Prot	c0.13	0.04		0.02	c0.05		c0.17	0.16			c0.16	
v/s Ratio Perm			0.08									0.04
v/c Ratio	0.85	0.17	0.33	0.55	0.43		0.56	0.53			0.78	0.18
Uniform Delay, d1	40.9	29.5	30.8	48.0	40.7		29.3	29.0			37.5	32.6
Progression Factor	1.00	1.00	1.00	1.00	1.00		1.00	1.00			1.00	1.00
Incremental Delay, d2	11.2	0.1	0.2	7.4	0.5		4.5	2.0			10.3	0.1
Delay (s)	52.1	29.6	31.0	55.4	41.2		33.9	31.0			47.8	32.7
Level of Service	D	C	C	E	D		C	C			D	C
Approach Delay (s)		40.3			44.0			32.0			40.6	
Approach LOS		D			D			C			D	

Intersection Summary			
HCM 2000 Control Delay	38.0	HCM 2000 Level of Service	D
HCM 2000 Volume to Capacity ratio	0.66		
Actuated Cycle Length (s)	100.0	Sum of lost time (s)	21.5
Intersection Capacity Utilization	72.8%	ICU Level of Service	C
Analysis Period (min)	15		

c Critical Lane Group

Movement	EBL	EBT	EBR	WBL	WBT	WBR	NBL	NBT	NBR	SBL	SBT	SBR
Lane Configurations												
Volume (vph)	60	10	40	60	10	25	125	490	35	15	450	100
Ideal Flow (vphpl)	1900	1900	1900	1900	1900	1900	1900	1900	1900	1900	1900	1900
Total Lost time (s)		4.9			4.9		4.4	4.9		4.4	4.9	
Lane Util. Factor		1.00			1.00		1.00	1.00		1.00	1.00	
Frpb, ped/bikes		0.99			0.99		1.00	1.00		1.00	0.99	
Flpb, ped/bikes		0.99			0.99		1.00	1.00		0.99	1.00	
Frt		0.95			0.96		1.00	0.99		1.00	0.97	
Flt Protected		0.97			0.97		0.95	1.00		0.95	1.00	
Satd. Flow (prot)		1685			1707		1770	1838		1744	1797	
Flt Permitted		0.81			0.76		0.95	1.00		0.95	1.00	
Satd. Flow (perm)		1409			1342		1770	1838		1744	1797	
Peak-hour factor, PHF	0.92	0.92	0.92	0.92	0.92	0.92	0.92	0.92	0.92	0.92	0.92	0.92
Adj. Flow (vph)	65	11	43	65	11	27	136	533	38	16	489	109
RTOR Reduction (vph)	0	32	0	0	20	0	0	2	0	0	10	0
Lane Group Flow (vph)	0	87	0	0	83	0	136	569	0	16	588	0
Confl. Peds. (#/hr)	10		10	10		10	10		10	10		10
Turn Type	Perm	NA		Perm	NA		Prot	NA		Prot	NA	
Protected Phases		4			8		5	2		1	6	
Permitted Phases	4			8								
Actuated Green, G (s)		9.2			9.2		11.7	50.8		0.8	39.9	
Effective Green, g (s)		9.2			9.2		11.7	50.8		0.8	39.9	
Actuated g/C Ratio		0.12			0.12		0.16	0.68		0.01	0.53	
Clearance Time (s)		4.9			4.9		4.4	4.9		4.4	4.9	
Vehicle Extension (s)		2.0			2.0		2.0	2.0		2.0	2.0	
Lane Grp Cap (vph)		172			164		276	1244		18	956	
v/s Ratio Prot							c0.08	0.31		0.01	c0.33	
v/s Ratio Perm		c0.06			0.06							
v/c Ratio		0.51			0.51		0.49	0.46		0.89	0.62	
Uniform Delay, d1		30.8			30.8		28.9	5.7		37.1	12.2	
Progression Factor		1.14			1.00		1.00	1.00		1.00	1.00	
Incremental Delay, d2		0.8			0.9		0.5	1.2		153.8	3.0	
Delay (s)		36.0			31.7		29.4	6.9		190.9	15.2	
Level of Service		D			C		C	A		F	B	
Approach Delay (s)		36.0			31.7			11.2			19.7	
Approach LOS		D			C			B			B	

Intersection Summary			
HCM 2000 Control Delay	17.9	HCM 2000 Level of Service	B
HCM 2000 Volume to Capacity ratio	0.58		
Actuated Cycle Length (s)	75.0	Sum of lost time (s)	14.2
Intersection Capacity Utilization	58.6%	ICU Level of Service	B
Analysis Period (min)	15		

c Critical Lane Group

Movement	WBL	WBR	NBT	NBR	SBL	SBT
Lane Configurations						
Volume (vph)	75	25	550	95	50	570
Ideal Flow (vphpl)	1900	1900	1900	1900	1900	1900
Total Lost time (s)	5.0		5.0		5.0	5.0
Lane Util. Factor	1.00		1.00		1.00	1.00
Frt	0.97		0.98		1.00	1.00
Flt Protected	0.96		1.00		0.95	1.00
Satd. Flow (prot)	1735		1826		1770	1863
Flt Permitted	0.96		1.00		0.33	1.00
Satd. Flow (perm)	1735		1826		606	1863
Peak-hour factor, PHF	0.92	0.92	0.92	0.92	0.92	0.92
Adj. Flow (vph)	82	27	598	103	54	620
RTOR Reduction (vph)	19	0	7	0	0	0
Lane Group Flow (vph)	90	0	694	0	54	620
Turn Type	Prot		NA		Perm	NA
Protected Phases	8		2			6
Permitted Phases					6	
Actuated Green, G (s)	7.0		31.7		31.7	31.7
Effective Green, g (s)	7.0		31.7		31.7	31.7
Actuated g/C Ratio	0.14		0.65		0.65	0.65
Clearance Time (s)	5.0		5.0		5.0	5.0
Vehicle Extension (s)	2.0		2.0		2.0	2.0
Lane Grp Cap (vph)	249		1188		394	1212
v/s Ratio Prot	c0.05		c0.38			0.33
v/s Ratio Perm					0.09	
v/c Ratio	0.36		0.58		0.14	0.51
Uniform Delay, d1	18.8		4.8		3.3	4.4
Progression Factor	1.00		1.00		1.00	1.00
Incremental Delay, d2	0.3		0.5		0.1	0.2
Delay (s)	19.2		5.3		3.3	4.6
Level of Service	B		A		A	A
Approach Delay (s)	19.2		5.3			4.5
Approach LOS	B		A			A

Intersection Summary			
HCM 2000 Control Delay	5.9	HCM 2000 Level of Service	A
HCM 2000 Volume to Capacity ratio	0.54		
Actuated Cycle Length (s)	48.7	Sum of lost time (s)	10.0
Intersection Capacity Utilization	55.6%	ICU Level of Service	B
Analysis Period (min)	15		
c Critical Lane Group			

Movement	EBL	EBT	WBT	WBR	SBL	SBR
Lane Configurations						
Volume (vph)	495	840	670	150	320	230
Ideal Flow (vphpl)	1900	1900	1900	1900	1900	1900
Total Lost time (s)	4.0	4.5	4.5		4.5	4.5
Lane Util. Factor	1.00	0.95	0.95		1.00	1.00
Frt	1.00	1.00	0.97		1.00	0.85
Flt Protected	0.95	1.00	1.00		0.95	1.00
Satd. Flow (prot)	1770	3539	3442		1770	1583
Flt Permitted	0.95	1.00	1.00		0.95	1.00
Satd. Flow (perm)	1770	3539	3442		1770	1583
Peak-hour factor, PHF	0.97	0.97	0.97	0.97	0.97	0.97
Adj. Flow (vph)	510	866	691	155	330	237
RTOR Reduction (vph)	0	0	21	0	0	186
Lane Group Flow (vph)	510	866	825	0	330	51
Turn Type	Prot	NA	NA		Prot	Perm
Protected Phases	7	4	8		6	
Permitted Phases						6
Actuated Green, G (s)	35.8	61.7	21.9		19.3	19.3
Effective Green, g (s)	35.8	61.7	21.9		19.3	19.3
Actuated g/C Ratio	0.40	0.69	0.24		0.21	0.21
Clearance Time (s)	4.0	4.5	4.5		4.5	4.5
Vehicle Extension (s)	2.0	2.0	2.0		2.0	2.0
Lane Grp Cap (vph)	704	2426	837		379	339
v/s Ratio Prot	c0.29	0.24	c0.24		c0.19	
v/s Ratio Perm						0.03
v/c Ratio	0.72	0.36	0.99		0.87	0.15
Uniform Delay, d1	22.9	5.9	33.9		34.1	28.7
Progression Factor	0.88	0.23	1.00		1.00	1.00
Incremental Delay, d2	2.7	0.2	27.8		18.6	0.1
Delay (s)	22.8	1.5	61.7		52.7	28.8
Level of Service	C	A	E		D	C
Approach Delay (s)		9.4	61.7		42.7	
Approach LOS		A	E		D	

Intersection Summary			
HCM 2000 Control Delay	32.0	HCM 2000 Level of Service	C
HCM 2000 Volume to Capacity ratio	0.83		
Actuated Cycle Length (s)	90.0	Sum of lost time (s)	13.0
Intersection Capacity Utilization	79.3%	ICU Level of Service	D
Analysis Period (min)	15		
c Critical Lane Group			

Movement	EBL	EBT	EBR	WBL	WBT	WBR	NBL	NBT	NBR	SBL	SBT	SBR
Lane Configurations												
Volume (vph)	30	5	25	40	15	15	70	380	30	15	495	20
Ideal Flow (vphpl)	1900	1900	1900	1900	1900	1900	1900	1900	1900	1900	1900	1900
Total Lost time (s)		5.5			5.5		5.5	5.5		5.5	5.5	
Lane Util. Factor		1.00			1.00		1.00	0.95		1.00	1.00	
Frpb, ped/bikes		0.99			1.00		1.00	1.00		1.00	1.00	
Flpb, ped/bikes		1.00			0.99		1.00	1.00		0.99	1.00	
Frt		0.94			0.97		1.00	0.99		1.00	0.99	
Flt Protected		0.98			0.97		0.95	1.00		0.95	1.00	
Satd. Flow (prot)		1682			1735		1770	3491		1755	1849	
Flt Permitted		0.80			0.79		0.95	1.00		0.95	1.00	
Satd. Flow (perm)		1382			1408		1770	3491		1755	1849	
Peak-hour factor, PHF	0.95	0.95	0.95	0.95	0.95	0.95	0.95	0.95	0.95	0.95	0.95	0.95
Adj. Flow (vph)	32	5	26	42	16	16	74	400	32	16	521	21
RTOR Reduction (vph)	0	23	0	0	14	0	0	4	0	0	1	0
Lane Group Flow (vph)	0	40	0	0	60	0	74	428	0	16	541	0
Confl. Peds. (#/hr)	10		10	10		10	10		10	10		10
Turn Type	Perm	NA		Perm	NA		Prot	NA		Prot	NA	
Protected Phases		4			8		5	2		1	6	
Permitted Phases	4			8								
Actuated Green, G (s)		5.6			5.6		3.5	32.8		0.4	29.7	
Effective Green, g (s)		5.6			5.6		3.5	32.8		0.4	29.7	
Actuated g/C Ratio		0.10			0.10		0.06	0.59		0.01	0.54	
Clearance Time (s)		5.5			5.5		5.5	5.5		5.5	5.5	
Vehicle Extension (s)		2.0			2.0		2.0	2.0		2.0	2.0	
Lane Grp Cap (vph)		139			142		112	2070		12	993	
v/s Ratio Prot							c0.04	c0.12		0.01	c0.29	
v/s Ratio Perm		0.03			c0.04							
v/c Ratio		0.29			0.42		0.66	0.21		1.33	0.54	
Uniform Delay, d1		23.0			23.3		25.3	5.2		27.4	8.4	
Progression Factor		1.00			1.00		1.00	1.00		1.00	1.00	
Incremental Delay, d2		0.4			0.7		10.8	0.0		384.2	0.3	
Delay (s)		23.4			24.1		36.1	5.2		411.7	8.7	
Level of Service		C			C		D	A		F	A	
Approach Delay (s)		23.4			24.1			9.7			20.3	
Approach LOS		C			C			A			C	

Intersection Summary			
HCM 2000 Control Delay	16.2	HCM 2000 Level of Service	B
HCM 2000 Volume to Capacity ratio	0.54		
Actuated Cycle Length (s)	55.3	Sum of lost time (s)	16.5
Intersection Capacity Utilization	52.8%	ICU Level of Service	A
Analysis Period (min)	15		

c Critical Lane Group

Movement	EBL	EBT	EBR	WBL	WBT	WBR	NBL	NBT	NBR	SBL	SBT	SBR
Lane Configurations												
Volume (vph)	20	30	75	35	120	35	75	425	75	40	510	10
Ideal Flow (vphpl)	1900	1900	1900	1900	1900	1900	1900	1900	1900	1900	1900	1900
Total Lost time (s)		4.9			4.9		4.4	5.8		4.4	5.5	
Lane Util. Factor		1.00			1.00		1.00	0.95		1.00	1.00	
Frpb, ped/bikes		0.98			1.00		1.00	0.99		1.00	1.00	
Flpb, ped/bikes		1.00			1.00		1.00	1.00		1.00	1.00	
Frt		0.92			0.97		1.00	0.98		1.00	1.00	
Flt Protected		0.99			0.99		0.95	1.00		0.95	1.00	
Satd. Flow (prot)		1664			1788		1770	3438		1770	1855	
Flt Permitted		0.94			0.93		0.95	1.00		0.95	1.00	
Satd. Flow (perm)		1569			1679		1770	3438		1770	1855	
Peak-hour factor, PHF	0.93	0.93	0.93	0.93	0.93	0.93	0.93	0.93	0.93	0.93	0.93	0.93
Adj. Flow (vph)	22	32	81	38	129	38	81	457	81	43	548	11
RTOR Reduction (vph)	0	64	0	0	15	0	0	13	0	0	0	0
Lane Group Flow (vph)	0	71	0	0	190	0	81	525	0	43	559	0
Confl. Peds. (#/hr)	10		10	10		10	10		10	10		10
Turn Type	Perm	NA		Perm	NA		Prot	NA		Prot	NA	
Protected Phases		4			8		5	2		1	6	
Permitted Phases	4			8								
Actuated Green, G (s)		15.4			15.4		6.0	41.0		3.5	38.8	
Effective Green, g (s)		15.4			15.4		6.0	41.0		3.5	38.8	
Actuated g/C Ratio		0.21			0.21		0.08	0.55		0.05	0.52	
Clearance Time (s)		4.9			4.9		4.4	5.8		4.4	5.5	
Vehicle Extension (s)		2.0			2.0		2.0	2.0		2.0	2.0	
Lane Grp Cap (vph)		322			344		141	1879		82	959	
v/s Ratio Prot							c0.05	0.15		0.02	c0.30	
v/s Ratio Perm		0.05			c0.11							
v/c Ratio		0.22			0.55		0.57	0.28		0.52	0.58	
Uniform Delay, d1		24.8			26.7		33.3	9.1		34.9	12.5	
Progression Factor		1.00			1.20		1.00	1.00		1.00	1.00	
Incremental Delay, d2		0.1			0.9		3.5	0.4		2.8	2.6	
Delay (s)		24.9			32.9		36.8	9.5		37.7	15.1	
Level of Service		C			C		D	A		D	B	
Approach Delay (s)		24.9			32.9			13.0			16.7	
Approach LOS		C			C			B			B	

Intersection Summary			
HCM 2000 Control Delay	18.1	HCM 2000 Level of Service	B
HCM 2000 Volume to Capacity ratio	0.57		
Actuated Cycle Length (s)	75.0	Sum of lost time (s)	15.1
Intersection Capacity Utilization	58.7%	ICU Level of Service	B
Analysis Period (min)	15		

c Critical Lane Group

Movement	EBL	EBT	EBR	WBL	WBT	WBR	NBL	NBT	NBR	SBL	SBT	SBR
Lane Configurations												
Volume (vph)	50	100	150	50	100	50	100	545	150	50	400	200
Ideal Flow (vphpl)	1900	1900	1900	1900	1900	1900	1900	1900	1900	1900	1900	1900
Total Lost time (s)		4.0	4.0		4.0		5.5	5.5		4.0	5.5	
Lane Util. Factor		1.00	1.00		1.00		1.00	1.00		1.00	0.95	
Frpb, ped/bikes		1.00	1.00		1.00		1.00	1.00		1.00	0.99	
Flpb, ped/bikes		1.00	1.00		1.00		1.00	1.00		1.00	1.00	
Frt		1.00	0.85		0.97		1.00	0.97		1.00	0.95	
Flt Protected		0.98	1.00		0.99		0.95	1.00		0.95	1.00	
Satd. Flow (prot)		1826	1583		1778		1770	1802		1770	3316	
Flt Permitted		0.76	1.00		0.85		0.40	1.00		0.95	1.00	
Satd. Flow (perm)		1403	1583		1523		753	1802		1770	3316	
Peak-hour factor, PHF	0.92	0.92	0.92	0.92	0.92	0.92	0.92	0.92	0.92	0.92	0.92	0.92
Adj. Flow (vph)	54	109	163	54	109	54	109	592	163	54	435	217
RTOR Reduction (vph)	0	0	133	0	20	0	0	13	0	0	56	0
Lane Group Flow (vph)	0	163	30	0	197	0	109	742	0	54	596	0
Confl. Peds. (#/hr)	10											10
Turn Type	Perm	NA	Perm	Perm	NA		Perm	NA		Prot	NA	
Protected Phases		4			8			2		1	6	
Permitted Phases	4		4	8			2					
Actuated Green, G (s)		14.0	14.0		14.0		30.5	30.5		17.0	51.5	
Effective Green, g (s)		14.0	14.0		14.0		30.5	30.5		17.0	51.5	
Actuated g/C Ratio		0.19	0.19		0.19		0.41	0.41		0.23	0.69	
Clearance Time (s)		4.0	4.0		4.0		5.5	5.5		4.0	5.5	
Vehicle Extension (s)		2.0	2.0		2.0		2.0	2.0		2.0	2.0	
Lane Grp Cap (vph)		261	295		284		306	732		401	2276	
v/s Ratio Prot								c0.41		0.03	c0.18	
v/s Ratio Perm		0.12	0.02		c0.13		0.14					
v/c Ratio		0.62	0.10		0.70		0.36	1.01		0.13	0.26	
Uniform Delay, d1		28.1	25.3		28.5		15.4	22.2		23.1	4.5	
Progression Factor		1.00	1.00		0.91		1.00	1.00		1.00	1.00	
Incremental Delay, d2		3.3	0.1		5.7		3.2	36.7		0.7	0.3	
Delay (s)		31.4	25.3		31.7		18.7	58.9		23.8	4.8	
Level of Service		C	C		C		B	E		C	A	
Approach Delay (s)		28.4			31.7			53.9			6.2	
Approach LOS		C			C			D			A	

Intersection Summary			
HCM 2000 Control Delay	31.7	HCM 2000 Level of Service	C
HCM 2000 Volume to Capacity ratio	0.74		
Actuated Cycle Length (s)	75.0	Sum of lost time (s)	13.5
Intersection Capacity Utilization	70.1%	ICU Level of Service	C
Analysis Period (min)	15		

c Critical Lane Group

Movement	EBL	EBT	WBT	WBR	SBL	SBR
Lane Configurations						
Volume (vph)	495	1145	710	300	210	390
Ideal Flow (vphpl)	1900	1900	1900	1900	1900	1900
Lane Width	12	12	12	12	11	11
Total Lost time (s)	4.0	4.5	4.0		4.0	4.0
Lane Util. Factor	1.00	0.95	0.95		1.00	0.88
Frt	1.00	1.00	0.96		1.00	0.85
Flt Protected	0.95	1.00	1.00		0.95	1.00
Satd. Flow (prot)	1593	3539	3213		1711	2694
Flt Permitted	0.95	1.00	1.00		0.95	1.00
Satd. Flow (perm)	1593	3539	3213		1711	2694
Peak-hour factor, PHF	0.92	0.92	0.92	0.92	0.92	0.92
Adj. Flow (vph)	538	1245	772	326	228	424
RTOR Reduction (vph)	0	0	52	0	0	22
Lane Group Flow (vph)	538	1245	1046	0	228	402
Parking (#/hr)	0		0			
Turn Type	Prot	NA	NA		Prot	pm+ov
Protected Phases	7	4	8		6	7
Permitted Phases						6
Actuated Green, G (s)	35.1	65.1	26.5		16.4	51.5
Effective Green, g (s)	35.1	65.1	26.5		16.4	51.5
Actuated g/C Ratio	0.39	0.72	0.29		0.18	0.57
Clearance Time (s)	4.0	4.5	4.0		4.0	4.0
Vehicle Extension (s)	2.0	2.0	2.0		2.0	2.0
Lane Grp Cap (vph)	621	2559	946		311	1661
v/s Ratio Prot	c0.34	0.35	c0.33		c0.13	0.09
v/s Ratio Perm						0.05
v/c Ratio	0.87	0.49	1.11		0.73	0.24
Uniform Delay, d1	25.3	5.3	31.8		34.7	9.6
Progression Factor	1.00	1.00	0.62		1.00	1.00
Incremental Delay, d2	11.8	0.1	60.0		7.5	0.0
Delay (s)	37.0	5.4	79.5		42.2	9.6
Level of Service	D	A	E		D	A
Approach Delay (s)		14.9	79.5		21.0	
Approach LOS		B	E		C	

Intersection Summary			
HCM 2000 Control Delay	36.1	HCM 2000 Level of Service	D
HCM 2000 Volume to Capacity ratio	0.92		
Actuated Cycle Length (s)	90.0	Sum of lost time (s)	12.0
Intersection Capacity Utilization	78.3%	ICU Level of Service	D
Analysis Period (min)	15		
c Critical Lane Group			

Movement	EBL	EBT	EBR	WBL	WBT	WBR	SEL	SET	SER	NWL	NWT	NWR
Lane Configurations												
Volume (vph)	40	995	320	150	710	40	40	40	30	310	40	300
Ideal Flow (vphpl)	1900	1900	1900	1900	1900	1900	1900	1900	1900	1900	1900	1900
Lane Width	11	12	11	11	12	12	10	10	10	11	12	11
Total Lost time (s)	4.5	4.5		4.5	4.5		4.5	4.5		4.5	4.5	4.5
Lane Util. Factor	1.00	0.95		1.00	0.95		1.00	1.00		1.00	1.00	1.00
Frpb, ped/bikes	1.00	0.99		1.00	1.00		1.00	1.00		1.00	1.00	1.00
Flpb, ped/bikes	1.00	1.00		1.00	1.00		1.00	1.00		0.99	1.00	1.00
Frt	1.00	0.96		1.00	0.99		1.00	0.93		1.00	1.00	0.85
Flt Protected	0.95	1.00		0.95	1.00		0.95	1.00		0.95	1.00	1.00
Satd. Flow (prot)	1540	3048		1540	3118		1486	1463		1523	1509	1378
Flt Permitted	0.95	1.00		0.95	1.00		0.73	1.00		0.71	1.00	1.00
Satd. Flow (perm)	1540	3048		1540	3118		1141	1463		1135	1509	1378
Peak-hour factor, PHF	0.92	0.92	0.92	0.92	0.92	0.92	0.92	0.92	0.92	0.92	0.92	0.92
Adj. Flow (vph)	43	1082	348	163	772	43	43	43	33	337	43	326
RTOR Reduction (vph)	0	34	0	0	4	0	0	23	0	0	0	299
Lane Group Flow (vph)	43	1396	0	163	811	0	43	53	0	337	43	27
Confl. Peds. (#/hr)			10	10						10		10
Confl. Bikes (#/hr)			10			10						
Bus Blockages (#/hr)	0	0	6	0	6	0	0	0	0	0	0	0
Parking (#/hr)											0	
Turn Type	Prot	NA		Prot	NA		Perm	NA		Perm	NA	Over
Protected Phases	7	4		3	8			6			2	3
Permitted Phases							6			2		
Actuated Green, G (s)	3.9	42.5		7.5	46.1		26.5	26.5		26.5	26.5	7.5
Effective Green, g (s)	3.9	42.5		7.5	46.1		26.5	26.5		26.5	26.5	7.5
Actuated g/C Ratio	0.04	0.47		0.08	0.51		0.29	0.29		0.29	0.29	0.08
Clearance Time (s)	4.5	4.5		4.5	4.5		4.5	4.5		4.5	4.5	4.5
Vehicle Extension (s)	2.0	2.0		2.0	2.0		2.0	2.0		2.0	2.0	2.0
Lane Grp Cap (vph)	66	1439		128	1597		335	430		334	444	114
v/s Ratio Prot	0.03	c0.46		c0.11	c0.26			0.04			0.03	0.02
v/s Ratio Perm							0.04			c0.30		
v/c Ratio	0.65	0.97		1.27	0.51		0.13	0.12		1.01	0.10	0.24
Uniform Delay, d1	42.4	23.1		41.2	14.5		23.3	23.2		31.8	23.1	38.6
Progression Factor	0.86	1.16		0.70	2.23		1.00	1.00		1.00	1.00	1.00
Incremental Delay, d2	14.4	16.2		153.2	0.7		0.1	0.0		51.5	0.0	4.9
Delay (s)	50.8	43.0		182.1	32.9		23.3	23.3		83.3	23.1	43.4
Level of Service	D	D		F	C		C	C		F	C	D
Approach Delay (s)		43.3			57.7			23.3			61.2	
Approach LOS		D			E			C			E	

Intersection Summary			
HCM 2000 Control Delay	50.7	HCM 2000 Level of Service	D
HCM 2000 Volume to Capacity ratio	0.99		
Actuated Cycle Length (s)	90.0	Sum of lost time (s)	13.5
Intersection Capacity Utilization	88.4%	ICU Level of Service	E
Analysis Period (min)	15		

c Critical Lane Group

Movement	EBL	EBT	EBR	WBL	WBT	WBR	NBL	NBT	NBR	SBL	SBT	SBR
Lane Configurations												
Volume (vph)	440	670	30	4	680	45	95	16	5	10	0	45
Ideal Flow (vphpl)	1900	1900	1900	1900	1900	1900	1900	1900	1900	1900	1900	1900
Total Lost time (s)	5.0	5.0		5.0	5.0			4.9			5.0	5.0
Lane Util. Factor	1.00	0.95		1.00	0.95			1.00			1.00	1.00
Frpb, ped/bikes	1.00	1.00		1.00	1.00			1.00			1.00	0.98
Flpb, ped/bikes	1.00	1.00		1.00	1.00			0.99			0.99	1.00
Frt	1.00	0.99		1.00	0.99			0.99			1.00	0.85
Flt Protected	0.95	1.00		0.95	1.00			0.96			0.95	1.00
Satd. Flow (prot)	1593	3510		1770	3501			1764			1756	1549
Flt Permitted	0.95	1.00		0.95	1.00			0.76			0.74	1.00
Satd. Flow (perm)	1593	3510		1770	3501			1389			1364	1549
Peak-hour factor, PHF	0.92	0.92	0.92	0.92	0.92	0.92	0.92	0.92	0.92	0.92	0.92	0.92
Adj. Flow (vph)	478	728	33	4	739	49	103	17	5	11	0	49
RTOR Reduction (vph)	0	3	0	0	7	0	0	3	0	0	0	42
Lane Group Flow (vph)	478	758	0	4	781	0	0	122	0	0	11	7
Confl. Peds. (#/hr)	10		10	10		10	10		10	10		10
Parking (#/hr)	0									0		
Turn Type	Prot	NA		Prot	NA		Perm	NA		Perm	NA	Perm
Protected Phases	7	4		3	8			2			6	
Permitted Phases							2			6		6
Actuated Green, G (s)	28.9	47.9		1.0	20.0			11.2			11.1	11.1
Effective Green, g (s)	28.9	47.9		1.0	20.0			11.2			11.1	11.1
Actuated g/C Ratio	0.39	0.64		0.01	0.27			0.15			0.15	0.15
Clearance Time (s)	5.0	5.0		5.0	5.0			4.9			5.0	5.0
Vehicle Extension (s)	2.0	2.0		2.0	2.0			2.0			2.0	2.0
Lane Grp Cap (vph)	613	2241		23	933			207			201	229
v/s Ratio Prot	c0.30	0.22		0.00	c0.22							
v/s Ratio Perm								c0.09			0.01	0.00
v/c Ratio	0.78	0.34		0.17	0.84			0.59			0.05	0.03
Uniform Delay, d1	20.3	6.2		36.6	26.0			29.8			27.4	27.3
Progression Factor	1.00	1.00		1.00	1.00			1.00			1.00	1.00
Incremental Delay, d2	5.7	0.4		1.3	6.3			3.0			0.0	0.0
Delay (s)	26.0	6.7		37.9	32.3			32.8			27.5	27.4
Level of Service	C	A		D	C			C			C	C
Approach Delay (s)		14.1			32.3			32.8			27.4	
Approach LOS		B			C			C			C	

Intersection Summary			
HCM 2000 Control Delay	22.0	HCM 2000 Level of Service	C
HCM 2000 Volume to Capacity ratio	0.76		
Actuated Cycle Length (s)	75.0	Sum of lost time (s)	15.0
Intersection Capacity Utilization	71.9%	ICU Level of Service	C
Analysis Period (min)	15		
c Critical Lane Group			

Movement	EBL	EBT	WBT	WBR	SBL	SBR
Lane Configurations						
Volume (vph)	305	395	425	375	320	160
Ideal Flow (vphpl)	1900	1900	1900	1900	1900	1900
Total Lost time (s)	5.0	5.0	5.0	5.0	5.0	5.0
Lane Util. Factor	1.00	0.95	0.95	1.00	0.97	0.91
Frpb, ped/bikes	1.00	1.00	1.00	0.97	1.00	0.98
Flpb, ped/bikes	1.00	1.00	1.00	1.00	0.99	1.00
Frt	1.00	1.00	1.00	0.85	0.99	0.85
Flt Protected	0.95	1.00	1.00	1.00	0.95	1.00
Satd. Flow (prot)	1433	3185	3185	1377	3036	1271
Flt Permitted	0.95	1.00	1.00	1.00	0.95	1.00
Satd. Flow (perm)	1433	3185	3185	1377	3036	1271
Peak-hour factor, PHF	0.95	0.95	0.95	0.95	0.95	0.95
Adj. Flow (vph)	321	416	447	395	337	168
RTOR Reduction (vph)	0	0	0	301	5	120
Lane Group Flow (vph)	321	416	447	94	349	31
Confl. Peds. (#/hr)	10			10	10	10
Parking (#/hr)	0					
Turn Type	Prot	NA	NA	Perm	Perm	Perm
Protected Phases	7	4	8			
Permitted Phases				8	6	6
Actuated Green, G (s)	20.8	41.1	15.3	15.3	13.3	13.3
Effective Green, g (s)	20.8	41.1	15.3	15.3	13.3	13.3
Actuated g/C Ratio	0.32	0.64	0.24	0.24	0.21	0.21
Clearance Time (s)	5.0	5.0	5.0	5.0	5.0	5.0
Vehicle Extension (s)	2.0	2.0	2.0	2.0	2.0	2.0
Lane Grp Cap (vph)	462	2032	756	327	627	262
v/s Ratio Prot	c0.22	0.13	c0.14			
v/s Ratio Perm				0.07	c0.12	0.02
v/c Ratio	0.69	0.20	0.59	0.29	0.56	0.12
Uniform Delay, d1	19.0	4.8	21.8	20.1	22.9	20.8
Progression Factor	1.00	1.00	1.00	1.00	1.00	1.00
Incremental Delay, d2	3.6	0.0	0.8	0.2	0.6	0.1
Delay (s)	22.7	4.9	22.6	20.3	23.5	20.9
Level of Service	C	A	C	C	C	C
Approach Delay (s)		12.6	21.5		22.7	
Approach LOS		B	C		C	

Intersection Summary			
HCM 2000 Control Delay	18.7	HCM 2000 Level of Service	B
HCM 2000 Volume to Capacity ratio	0.62		
Actuated Cycle Length (s)	64.4	Sum of lost time (s)	15.0
Intersection Capacity Utilization	60.2%	ICU Level of Service	B
Analysis Period (min)	15		
c Critical Lane Group			

Movement	EBL	EBT	EBR	WBL	WBT	WBR	NBL	NBT	NBR	SBL	SBT	SBR
Lane Configurations												
Volume (vph)	60	615	40	40	725	50	25	5	25	105	10	50
Ideal Flow (vphpl)	1900	1900	1900	1900	1900	1900	1900	1900	1900	1900	1900	1900
Total Lost time (s)	5.0	5.0		5.0	5.0			5.0	5.0		5.0	5.0
Lane Util. Factor	1.00	0.95		1.00	0.95			1.00	1.00		1.00	1.00
Frpb, ped/bikes	1.00	1.00		1.00	1.00			1.00	0.98		1.00	0.98
Flpb, ped/bikes	1.00	1.00		1.00	1.00			1.00	1.00		0.99	1.00
Frt	1.00	0.99		1.00	0.99			1.00	0.85		1.00	0.85
Flt Protected	0.95	1.00		0.95	1.00			0.96	1.00		0.96	1.00
Satd. Flow (prot)	1770	3499		1770	3497			1779	1554		1772	1554
Flt Permitted	0.95	1.00		0.95	1.00			0.73	1.00		0.72	1.00
Satd. Flow (perm)	1770	3499		1770	3497			1359	1554		1337	1554
Peak-hour factor, PHF	0.94	0.94	0.94	0.94	0.94	0.94	0.94	0.94	0.94	0.94	0.94	0.94
Adj. Flow (vph)	64	654	43	43	771	53	27	5	27	112	11	53
RTOR Reduction (vph)	0	3	0	0	4	0	0	0	21	0	0	41
Lane Group Flow (vph)	64	694	0	43	820	0	0	32	6	0	123	12
Confl. Peds. (#/hr)	10		10	10		10	10		10	10		10
Turn Type	Prot	NA		Prot	NA		Perm	NA	Perm	Perm	NA	Perm
Protected Phases	7	4		3	8			2			6	
Permitted Phases							2		2	6		6
Actuated Green, G (s)	3.8	21.6		2.2	20.0			11.0	11.0		11.0	11.0
Effective Green, g (s)	3.8	21.6		2.2	20.0			11.0	11.0		11.0	11.0
Actuated g/C Ratio	0.08	0.43		0.04	0.40			0.22	0.22		0.22	0.22
Clearance Time (s)	5.0	5.0		5.0	5.0			5.0	5.0		5.0	5.0
Vehicle Extension (s)	2.0	2.0		2.0	2.0			2.0	2.0		2.0	2.0
Lane Grp Cap (vph)	135	1517		78	1404			300	343		295	343
v/s Ratio Prot	c0.04	0.20		0.02	c0.23							
v/s Ratio Perm								0.02	0.00		c0.09	0.01
v/c Ratio	0.47	0.46		0.55	0.58			0.11	0.02		0.42	0.03
Uniform Delay, d1	22.0	10.0		23.3	11.6			15.5	15.2		16.6	15.2
Progression Factor	1.00	1.00		1.00	1.00			1.00	1.00		1.00	1.00
Incremental Delay, d2	1.0	0.1		4.7	0.4			0.1	0.0		0.3	0.0
Delay (s)	23.0	10.0		28.0	12.0			15.5	15.2		17.0	15.2
Level of Service	C	B		C	B			B	B		B	B
Approach Delay (s)		11.1			12.8			15.4			16.5	
Approach LOS		B			B			B			B	

Intersection Summary			
HCM 2000 Control Delay	12.6	HCM 2000 Level of Service	B
HCM 2000 Volume to Capacity ratio	0.52		
Actuated Cycle Length (s)	49.8	Sum of lost time (s)	15.0
Intersection Capacity Utilization	52.3%	ICU Level of Service	A
Analysis Period (min)	15		

c Critical Lane Group

Movement	WBL	WBR	NBT	NBR	SBL	SBT
Lane Configurations						
Volume (veh/h)	20	26	577	31	44	620
Sign Control	Stop		Free			Free
Grade	0%		0%			0%
Peak Hour Factor	0.88	0.88	0.92	0.92	0.88	0.88
Hourly flow rate (vph)	25	59	652	35	55	775
Pedestrians						
Lane Width (ft)						
Walking Speed (ft/s)						
Percent Blockage						
Right turn flare (veh)						
Median type			None			None
Median storage veh)						
Upstream signal (ft)			1175			441
pX, platoon unblocked	0.82					
vC, conflicting volume	1555	344			687	
vC1, stage 1 conf vol						
vC2, stage 2 conf vol						
vCu, unblocked vol	1567	344			687	
tC, single (s)	6.8	6.9			4.1	
tC, 2 stage (s)						
tF (s)	3.5	3.3			2.2	
p0 queue free %	68	91			94	
cM capacity (veh/h)	79	652			903	

Direction, Lane #	WB 1	NB 1	NB 2	SB 1	SB 2
Volume Total	84	435	252	55	775
Volume Left	25	0	0	55	0
Volume Right	59	0	35	0	0
cSH	206	1700	1700	903	1700
Volume to Capacity	0.41	0.26	0.15	0.06	0.46
Queue Length 95th (ft)	46	0	0	5	0
Control Delay (s)	34.1	0.0	0.0	9.2	0.0
Lane LOS	D			A	
Approach Delay (s)	34.1	0.0		0.6	
Approach LOS	D				

Intersection Summary			
Average Delay	2.1		
Intersection Capacity Utilization	47.0%	ICU Level of Service	A
Analysis Period (min)	15		

Movement	EBL	EBT	EBR	WBL	WBT	WBR	NBL	NBT	NBR	SBL	SBT	SBR
Lane Configurations												
Sign Control		Stop			Stop			Stop			Stop	
Volume (vph)	218	22	5	1	15	39	4	107	3	32	151	241
Peak Hour Factor	0.86	0.86	0.86	0.86	0.86	0.86	0.86	0.86	0.86	0.86	0.86	0.86
Hourly flow rate (vph)	304	31	7	1	21	54	6	149	3	45	211	336

Direction, Lane #	EB 1	WB 1	NB 1	SB 1
Volume Total (vph)	342	77	158	592
Volume Left (vph)	304	1	6	45
Volume Right (vph)	7	54	3	336
Hadj (s)	0.20	-0.39	0.03	-0.29
Departure Headway (s)	6.4	6.5	6.4	5.3
Degree Utilization, x	0.61	0.14	0.28	0.88
Capacity (veh/h)	539	494	524	664
Control Delay (s)	18.8	10.6	11.9	34.1
Approach Delay (s)	18.8	10.6	11.9	34.1
Approach LOS	C	B	B	D

Intersection Summary			
Delay	25.1		
Level of Service	D		
Intersection Capacity Utilization	69.5%	ICU Level of Service	C
Analysis Period (min)	15		

Movement	NBL	NBT	SBT	SBR	SEL	SER
Lane Configurations						
Volume (veh/h)	5	595	705	30	32	24
Sign Control		Free	Free		Stop	
Grade		0%	0%		0%	
Peak Hour Factor	0.92	0.92	0.92	0.92	0.92	0.92
Hourly flow rate (vph)	11	711	690	33	35	26
Pedestrians						
Lane Width (ft)						
Walking Speed (ft/s)						
Percent Blockage						
Right turn flare (veh)						
Median type		None	None			
Median storage veh)						
Upstream signal (ft)		748	431			
pX, platoon unblocked	0.83				0.90	0.83
vC, conflicting volume	722				1439	706
vC1, stage 1 conf vol						
vC2, stage 2 conf vol						
vCu, unblocked vol	563				1096	543
tC, single (s)	4.1				6.4	6.2
tC, 2 stage (s)						
tF (s)	2.2				3.5	3.3
p0 queue free %	99				83	94
cM capacity (veh/h)	837				209	448

Direction, Lane #	NB 1	NB 2	SB 1	SE 1
Volume Total	11	711	722	61
Volume Left	11	0	0	35
Volume Right	0	0	33	26
cSH	837	1700	1700	271
Volume to Capacity	0.01	0.42	0.42	0.22
Queue Length 95th (ft)	1	0	0	21
Control Delay (s)	9.4	0.0	0.0	22.1
Lane LOS	A			C
Approach Delay (s)	0.1		0.0	22.1
Approach LOS				C

Intersection Summary			
Average Delay	1.0		
Intersection Capacity Utilization	45.2%	ICU Level of Service	A
Analysis Period (min)	15		

Movement	WBL	WBR	NBT	NBR	SBL	SBT
Lane Configurations						
Volume (vph)	35	58	500	130	125	575
Ideal Flow (vphpl)	1900	1900	1900	1900	1900	1900
Total Lost time (s)	5.0		5.0		5.5	5.0
Lane Util. Factor	1.00		0.95		1.00	0.95
Frpb, ped/bikes	0.99		0.99		1.00	1.00
Flpb, ped/bikes	1.00		1.00		1.00	1.00
Frt	0.92		0.96		1.00	1.00
Flt Protected	0.98		1.00		0.95	1.00
Satd. Flow (prot)	1489		3382		1770	3539
Flt Permitted	0.98		1.00		0.95	1.00
Satd. Flow (perm)	1489		3382		1770	3539
Peak-hour factor, PHF	0.92	0.92	0.92	0.92	0.92	0.92
Growth Factor (vph)	100%	100%	100%	120%	100%	100%
Adj. Flow (vph)	38	63	543	170	136	625
RTOR Reduction (vph)	55	0	27	0	0	0
Lane Group Flow (vph)	46	0	686	0	136	625
Confl. Peds. (#/hr)	10	10		10	10	
Parking (#/hr)	0					
Turn Type	Prot		NA		Prot	NA
Protected Phases	8		2		1	6
Permitted Phases						
Actuated Green, G (s)	7.9		31.4		7.7	44.6
Effective Green, g (s)	7.9		31.4		7.7	44.6
Actuated g/C Ratio	0.13		0.50		0.12	0.71
Clearance Time (s)	5.0		5.0		5.5	5.0
Vehicle Extension (s)	2.0		2.0		2.0	2.0
Lane Grp Cap (vph)	188		1699		218	2525
v/s Ratio Prot	c0.03		c0.20		c0.08	0.18
v/s Ratio Perm						
v/c Ratio	0.24		0.40		0.62	0.25
Uniform Delay, d1	24.6		9.7		26.0	3.1
Progression Factor	1.00		1.00		1.00	1.00
Incremental Delay, d2	0.2		0.7		4.0	0.2
Delay (s)	24.9		10.4		30.0	3.3
Level of Service	C		B		C	A
Approach Delay (s)	24.9		10.4			8.1
Approach LOS	C		B			A

Intersection Summary			
HCM 2000 Control Delay	10.2	HCM 2000 Level of Service	B
HCM 2000 Volume to Capacity ratio	0.41		
Actuated Cycle Length (s)	62.5	Sum of lost time (s)	15.5
Intersection Capacity Utilization	49.2%	ICU Level of Service	A
Analysis Period (min)	15		

c Critical Lane Group

Movement	EBL	EBT	EBR	WBL	WBT	WBR	NBL	NBT	NBR	SBL	SBT	SBR
Lane Configurations												
Volume (vph)	97	721	0	0	663	352	117	0	787	0	0	0
Ideal Flow (vphpl)	1900	1900	1900	1900	1900	1900	1900	1900	1900	1900	1900	1900
Total Lost time (s)	5.5	5.5			5.5	5.5	5.5		5.5			
Lane Util. Factor	1.00	0.95			0.95	1.00	1.00		1.00			
Frpb, ped/bikes	1.00	1.00			1.00	0.95	1.00		0.98			
Flpb, ped/bikes	1.00	1.00			1.00	1.00	1.00		1.00			
Frt	1.00	1.00			1.00	0.85	1.00		0.85			
Flt Protected	0.95	1.00			1.00	1.00	0.95		1.00			
Satd. Flow (prot)	1593	3185			3185	1356	1593		1397			
Flt Permitted	0.95	1.00			1.00	1.00	0.95		1.00			
Satd. Flow (perm)	1593	3185			3185	1356	1593		1397			
Peak-hour factor, PHF	0.96	0.96	0.96	0.96	0.96	0.96	0.96	0.96	0.96	0.96	0.96	0.96
Growth Factor (vph)	120%	120%	120%	120%	120%	120%	120%	120%	120%	120%	120%	120%
Adj. Flow (vph)	121	901	0	0	829	440	146	0	984	0	0	0
RTOR Reduction (vph)	0	0	0	0	0	276	0	0	0	0	0	0
Lane Group Flow (vph)	121	901	0	0	829	164	146	0	984	0	0	0
Confl. Peds. (#/hr)	10		10	10		10	10		10	10		10
Turn Type	Prot	NA			NA	Perm	Prot		custom			
Protected Phases	7	4			8		2		2			
Permitted Phases						8			4			
Actuated Green, G (s)	8.1	39.4			25.8	25.8	19.0		58.4			
Effective Green, g (s)	8.1	39.4			25.8	25.8	19.0		58.4			
Actuated g/C Ratio	0.12	0.57			0.37	0.37	0.27		0.84			
Clearance Time (s)	5.5	5.5			5.5	5.5	5.5		5.5			
Vehicle Extension (s)	2.0	2.0			2.0	2.0	2.0		2.0			
Lane Grp Cap (vph)	185	1808			1184	504	436		1397			
v/s Ratio Prot	0.08	0.28			0.26		0.09		c0.19			
v/s Ratio Perm						0.12			0.51			
v/c Ratio	0.65	0.50			0.70	0.32	0.33		0.70			
Uniform Delay, d1	29.3	9.0			18.5	15.6	20.1		2.1			
Progression Factor	1.00	1.00			1.00	1.00	1.00		1.00			
Incremental Delay, d2	6.2	0.1			1.5	0.1	0.2		1.3			
Delay (s)	35.5	9.1			20.1	15.7	20.3		3.5			
Level of Service	D	A			C	B	C		A			
Approach Delay (s)		12.2			18.6			5.7			0.0	
Approach LOS		B			B			A			A	

Intersection Summary			
HCM 2000 Control Delay	12.4	HCM 2000 Level of Service	B
HCM 2000 Volume to Capacity ratio	0.92		
Actuated Cycle Length (s)	69.4	Sum of lost time (s)	16.5
Intersection Capacity Utilization	101.7%	ICU Level of Service	G
Analysis Period (min)	15		
c Critical Lane Group			

Movement	WBL	WBR	NBT	NBR	SBL	SBT
Lane Configurations						
Volume (vph)	212	100	530	240	60	550
Ideal Flow (vphpl)	1900	1900	1900	1900	1900	1900
Total Lost time (s)	5.0	5.0	5.0	5.0	5.0	5.0
Lane Util. Factor	1.00	1.00	0.95	1.00	1.00	1.00
Frpb, ped/bikes	1.00	0.98	1.00	0.96	1.00	1.00
Flpb, ped/bikes	1.00	1.00	1.00	1.00	1.00	1.00
Frt	1.00	0.85	1.00	0.85	1.00	1.00
Flt Protected	0.95	1.00	1.00	1.00	0.95	1.00
Satd. Flow (prot)	1593	1395	3185	1369	1593	1676
Flt Permitted	0.95	1.00	1.00	1.00	0.95	1.00
Satd. Flow (perm)	1593	1395	3185	1369	1593	1676
Peak-hour factor, PHF	0.97	0.97	0.97	0.97	0.97	0.97
Adj. Flow (vph)	219	103	546	247	62	567
RTOR Reduction (vph)	0	78	0	133	0	0
Lane Group Flow (vph)	219	25	546	114	62	567
Confl. Peds. (#/hr)	10	10		10	10	
Turn Type	Prot	Perm	NA	Perm	Prot	NA
Protected Phases	8		2		1	6
Permitted Phases		8		2		
Actuated Green, G (s)	16.2	16.2	30.4	30.4	4.2	39.6
Effective Green, g (s)	16.2	16.2	30.4	30.4	4.2	39.6
Actuated g/C Ratio	0.25	0.25	0.46	0.46	0.06	0.60
Clearance Time (s)	5.0	5.0	5.0	5.0	5.0	5.0
Vehicle Extension (s)	2.0	2.0	2.0	2.0	2.0	2.0
Lane Grp Cap (vph)	392	343	1471	632	101	1008
v/s Ratio Prot	c0.14		0.17		0.04	c0.34
v/s Ratio Perm		0.02		0.08		
v/c Ratio	0.56	0.07	0.37	0.18	0.61	0.56
Uniform Delay, d1	21.7	19.0	11.5	10.4	30.0	7.9
Progression Factor	1.00	1.00	1.00	1.00	1.00	1.00
Incremental Delay, d2	1.0	0.0	0.7	0.6	7.5	2.3
Delay (s)	22.7	19.1	12.2	11.0	37.6	10.2
Level of Service	C	B	B	B	D	B
Approach Delay (s)	21.5		11.8			12.9
Approach LOS	C		B			B

Intersection Summary			
HCM 2000 Control Delay	14.0	HCM 2000 Level of Service	B
HCM 2000 Volume to Capacity ratio	0.62		
Actuated Cycle Length (s)	65.8	Sum of lost time (s)	15.0
Intersection Capacity Utilization	55.0%	ICU Level of Service	B
Analysis Period (min)	15		

c Critical Lane Group

Movement	EBL	EBT	EBR	WBL	WBT	WBR	NBL	NBT	NBR	SBL	SBT	SBR
Lane Configurations												
Volume (vph)	186	984	282	117	643	47	209	14	152	83	14	144
Ideal Flow (vphpl)	1900	1900	1900	1900	1900	1900	1900	1900	1900	1900	1900	1900
Total Lost time (s)	5.0	5.0	5.0	5.0	5.0		5.0	5.0		5.0	5.0	
Lane Util. Factor	1.00	0.95	1.00	1.00	0.95		1.00	1.00		1.00	1.00	
Frpb, ped/bikes	1.00	1.00	0.95	1.00	1.00		1.00	0.98		1.00	0.98	
Flpb, ped/bikes	1.00	1.00	1.00	1.00	1.00		0.99	1.00		0.99	1.00	
Frt	1.00	1.00	0.85	1.00	0.99		1.00	0.86		1.00	0.86	
Flt Protected	0.95	1.00	1.00	0.95	1.00		0.95	1.00		0.95	1.00	
Satd. Flow (prot)	1593	3185	1360	1593	3143		1583	1420		1583	1421	
Flt Permitted	0.95	1.00	1.00	0.95	1.00		0.57	1.00		0.55	1.00	
Satd. Flow (perm)	1593	3185	1360	1593	3143		942	1420		916	1421	
Peak-hour factor, PHF	0.95	0.95	0.95	0.95	0.95	0.95	0.95	0.95	0.95	0.95	0.95	0.95
Growth Factor (vph)	120%	120%	120%	120%	120%	120%	120%	120%	120%	120%	120%	120%
Adj. Flow (vph)	235	1243	356	148	812	59	264	18	192	105	18	182
RTOR Reduction (vph)	0	0	163	0	5	0	0	135	0	0	128	0
Lane Group Flow (vph)	235	1243	193	148	866	0	264	75	0	105	72	0
Confl. Peds. (#/hr)	10		10	10		10	10		10	10		10
Turn Type	Prot	NA	Perm	Prot	NA		Perm	NA		Perm	NA	
Protected Phases	7	4		3	8			2			6	
Permitted Phases			4				2			6		
Actuated Green, G (s)	15.2	35.4	35.4	11.9	32.1		26.4	26.4		26.4	26.4	
Effective Green, g (s)	15.2	35.4	35.4	11.9	32.1		26.4	26.4		26.4	26.4	
Actuated g/C Ratio	0.17	0.40	0.40	0.13	0.36		0.30	0.30		0.30	0.30	
Clearance Time (s)	5.0	5.0	5.0	5.0	5.0		5.0	5.0		5.0	5.0	
Vehicle Extension (s)	2.0	2.0	2.0	2.0	2.0		2.0	2.0		2.0	2.0	
Lane Grp Cap (vph)	272	1271	542	213	1137		280	422		272	422	
v/s Ratio Prot	c0.15	c0.39		0.09	0.28			0.05			0.05	
v/s Ratio Perm			0.14				c0.28			0.11		
v/c Ratio	0.86	0.98	0.36	0.69	0.76		0.94	0.18		0.39	0.17	
Uniform Delay, d1	35.7	26.3	18.7	36.7	24.9		30.4	23.1		24.7	23.1	
Progression Factor	1.00	1.00	1.00	1.00	1.00		1.00	1.00		1.00	1.00	
Incremental Delay, d2	22.9	19.8	0.1	7.7	2.8		38.1	0.1		0.3	0.1	
Delay (s)	58.6	46.1	18.8	44.4	27.7		68.5	23.2		25.1	23.1	
Level of Service	E	D	B	D	C		E	C		C	C	
Approach Delay (s)		42.4			30.1			48.4			23.8	
Approach LOS		D			C			D			C	

Intersection Summary			
HCM 2000 Control Delay	38.2	HCM 2000 Level of Service	D
HCM 2000 Volume to Capacity ratio	0.98		
Actuated Cycle Length (s)	88.7	Sum of lost time (s)	15.0
Intersection Capacity Utilization	94.2%	ICU Level of Service	F
Analysis Period (min)	15		
c Critical Lane Group			

Movement	WBL	WBR	NBT	NBR	SBL	SBT
Lane Configurations						
Volume (vph)	90	70	700	100	40	670
Ideal Flow (vphpl)	1900	1900	1900	1900	1900	1900
Total Lost time (s)	5.5		5.5	5.5	5.5	5.5
Lane Util. Factor	1.00		0.95	1.00	1.00	1.00
Frpb, ped/bikes	0.99		1.00	0.97	1.00	1.00
Flpb, ped/bikes	1.00		1.00	1.00	1.00	1.00
Frt	0.94		1.00	0.85	1.00	1.00
Flt Protected	0.97		1.00	1.00	0.95	1.00
Satd. Flow (prot)	1690		3539	1529	1770	1863
Flt Permitted	0.97		1.00	1.00	0.95	1.00
Satd. Flow (perm)	1690		3539	1529	1770	1863
Peak-hour factor, PHF	0.97	0.97	0.97	0.97	0.97	0.97
Adj. Flow (vph)	93	72	722	103	41	691
RTOR Reduction (vph)	47	0	0	38	0	0
Lane Group Flow (vph)	118	0	722	65	41	691
Confl. Peds. (#/hr)	10	10		10	10	
Turn Type	Prot		NA	Perm	Prot	NA
Protected Phases	8		2		1	6
Permitted Phases				2		
Actuated Green, G (s)	7.1		24.0	24.0	1.3	30.8
Effective Green, g (s)	7.1		24.0	24.0	1.3	30.8
Actuated g/C Ratio	0.15		0.49	0.49	0.03	0.63
Clearance Time (s)	5.5		5.5	5.5	5.5	5.5
Vehicle Extension (s)	2.0		2.0	2.0	2.0	2.0
Lane Grp Cap (vph)	245		1736	750	47	1173
v/s Ratio Prot	c0.07		0.20		0.02	c0.37
v/s Ratio Perm				0.04		
v/c Ratio	0.48		0.42	0.09	0.87	0.59
Uniform Delay, d1	19.2		8.0	6.6	23.7	5.3
Progression Factor	1.00		1.00	1.00	1.00	1.00
Incremental Delay, d2	0.5		0.1	0.0	82.4	0.5
Delay (s)	19.8		8.0	6.6	106.1	5.8
Level of Service	B		A	A	F	A
Approach Delay (s)	19.8		7.9			11.4
Approach LOS	B		A			B

Intersection Summary			
HCM 2000 Control Delay	10.5	HCM 2000 Level of Service	B
HCM 2000 Volume to Capacity ratio	0.67		
Actuated Cycle Length (s)	48.9	Sum of lost time (s)	16.5
Intersection Capacity Utilization	55.4%	ICU Level of Service	B
Analysis Period (min)	15		

c Critical Lane Group

Movement	WBL	WBR	NBT	NBR	SBL	SBT
Lane Configurations						
Volume (vph)	60	30	790	100	40	720
Ideal Flow (vphpl)	1900	1900	1900	1900	1900	1900
Total Lost time (s)	5.5		5.5		5.5	5.5
Lane Util. Factor	1.00		0.95		1.00	1.00
Frpb, ped/bikes	0.99		1.00		1.00	1.00
Flpb, ped/bikes	1.00		1.00		1.00	1.00
Frt	0.95		0.98		1.00	1.00
Flt Protected	0.97		1.00		0.95	1.00
Satd. Flow (prot)	1710		3466		1770	1863
Flt Permitted	0.97		1.00		0.95	1.00
Satd. Flow (perm)	1710		3466		1770	1863
Peak-hour factor, PHF	0.97	0.97	0.97	0.97	0.97	0.97
Adj. Flow (vph)	62	31	814	103	41	742
RTOR Reduction (vph)	27	0	10	0	0	0
Lane Group Flow (vph)	66	0	907	0	41	742
Confl. Peds. (#/hr)	10	10		10	10	
Turn Type	Prot		NA		Prot	NA
Protected Phases	8		2		1	6
Permitted Phases						
Actuated Green, G (s)	6.2		27.5		1.4	34.4
Effective Green, g (s)	6.2		27.5		1.4	34.4
Actuated g/C Ratio	0.12		0.53		0.03	0.67
Clearance Time (s)	5.5		5.5		5.5	5.5
Vehicle Extension (s)	2.0		2.0		2.0	2.0
Lane Grp Cap (vph)	205		1847		48	1242
v/s Ratio Prot	c0.04		0.26		0.02	c0.40
v/s Ratio Perm						
v/c Ratio	0.32		0.49		0.85	0.60
Uniform Delay, d1	20.8		7.6		25.0	4.8
Progression Factor	1.00		1.00		1.00	1.00
Incremental Delay, d2	0.3		0.1		74.9	0.5
Delay (s)	21.1		7.7		99.9	5.3
Level of Service	C		A		F	A
Approach Delay (s)	21.1		7.7			10.2
Approach LOS	C		A			B

Intersection Summary			
HCM 2000 Control Delay	9.5	HCM 2000 Level of Service	A
HCM 2000 Volume to Capacity ratio	0.64		
Actuated Cycle Length (s)	51.6	Sum of lost time (s)	16.5
Intersection Capacity Utilization	55.0%	ICU Level of Service	B
Analysis Period (min)	15		

c Critical Lane Group

Movement	NBT	NBR	SBL	SBT	NWL	NWR
Lane Configurations						
Volume (vph)	565	25	210	570	30	325
Ideal Flow (vphpl)	1900	1900	1900	1900	1900	1900
Total Lost time (s)	5.5		5.5	5.5	5.5	5.5
Lane Util. Factor	0.95		1.00	1.00	1.00	1.00
Frpb, ped/bikes	1.00		1.00	1.00	1.00	0.98
Flpb, ped/bikes	1.00		1.00	1.00	1.00	1.00
Frt	0.99		1.00	1.00	1.00	0.85
Flt Protected	1.00		0.95	1.00	0.95	1.00
Satd. Flow (prot)	3512		1770	1863	1770	1551
Flt Permitted	1.00		0.95	1.00	0.95	1.00
Satd. Flow (perm)	3512		1770	1863	1770	1551
Peak-hour factor, PHF	0.99	0.99	0.99	0.99	0.99	0.99
Adj. Flow (vph)	571	25	212	576	30	328
RTOR Reduction (vph)	4	0	0	0	0	278
Lane Group Flow (vph)	592	0	212	576	30	50
Confl. Peds. (#/hr)		10	10		10	10
Turn Type	NA		Prot	NA	Prot	Perm
Protected Phases	2		1	6	8	
Permitted Phases						8
Actuated Green, G (s)	13.2		10.2	28.9	7.2	7.2
Effective Green, g (s)	13.2		10.2	28.9	7.2	7.2
Actuated g/C Ratio	0.28		0.22	0.61	0.15	0.15
Clearance Time (s)	5.5		5.5	5.5	5.5	5.5
Vehicle Extension (s)	2.0		2.0	2.0	2.0	2.0
Lane Grp Cap (vph)	984		383	1143	270	237
v/s Ratio Prot	c0.17		0.12	c0.31	0.02	
v/s Ratio Perm						c0.03
v/c Ratio	0.60		0.55	0.50	0.11	0.21
Uniform Delay, d1	14.7		16.4	5.1	17.2	17.5
Progression Factor	1.00		1.00	1.00	1.00	1.00
Incremental Delay, d2	0.7		1.0	0.1	0.1	0.2
Delay (s)	15.4		17.4	5.2	17.3	17.6
Level of Service	B		B	A	B	B
Approach Delay (s)	15.4			8.5	17.6	
Approach LOS	B			A	B	

Intersection Summary			
HCM 2000 Control Delay	12.7	HCM 2000 Level of Service	B
HCM 2000 Volume to Capacity ratio	0.53		
Actuated Cycle Length (s)	47.1	Sum of lost time (s)	16.5
Intersection Capacity Utilization	48.2%	ICU Level of Service	A
Analysis Period (min)	15		

c Critical Lane Group

Movement	EBL	EBT	EBR	WBL	WBT	WBR	NBL	NBT	NBR	SBL	SBT	SBR
Lane Configurations												
Volume (vph)	10	50	70	200	100	50	50	400	300	15	250	50
Ideal Flow (vphpl)	1900	1900	1900	1900	1900	1900	1900	1900	1900	1900	1900	1900
Total Lost time (s)		5.0			5.0	5.0		5.0	5.0		5.0	
Lane Util. Factor		1.00			1.00	1.00		1.00	1.00		1.00	
Frpb, ped/bikes		0.99			1.00	0.96		1.00	0.96		0.99	
Flpb, ped/bikes		1.00			0.99	1.00		1.00	1.00		1.00	
Frt		0.93			1.00	0.85		1.00	0.85		0.98	
Flt Protected		1.00			0.97	1.00		0.99	1.00		1.00	
Satd. Flow (prot)		1699			1792	1522		1850	1521		1806	
Flt Permitted		0.97			0.75	1.00		0.93	1.00		0.98	
Satd. Flow (perm)		1648			1382	1522		1737	1521		1767	
Peak-hour factor, PHF	0.97	0.97	0.97	0.97	0.97	0.97	0.97	0.97	0.97	0.97	0.97	0.97
Adj. Flow (vph)	10	52	72	206	103	52	52	412	309	15	258	52
RTOR Reduction (vph)	0	52	0	0	0	23	0	0	130	0	9	0
Lane Group Flow (vph)	0	82	0	0	309	29	0	464	179	0	316	0
Confl. Peds. (#/hr)	10		10	10		10	10		10	10		10
Turn Type	Perm	NA		Perm	NA	Perm	Perm	NA	Perm	Perm	NA	
Protected Phases		2			6			8			4	
Permitted Phases	2			6		6	8		8	4		
Actuated Green, G (s)		18.6			18.6	18.6		39.4	39.4		39.4	
Effective Green, g (s)		18.6			18.6	18.6		39.4	39.4		39.4	
Actuated g/C Ratio		0.27			0.27	0.27		0.58	0.58		0.58	
Clearance Time (s)		5.0			5.0	5.0		5.0	5.0		5.0	
Vehicle Extension (s)		2.0			2.0	2.0		2.0	2.0		2.0	
Lane Grp Cap (vph)		450			378	416		1006	881		1023	
v/s Ratio Prot												
v/s Ratio Perm		0.05			c0.22	0.02		c0.27	0.12		0.18	
v/c Ratio		0.18			0.82	0.07		0.46	0.20		0.31	
Uniform Delay, d1		18.9			23.1	18.3		8.2	6.8		7.3	
Progression Factor		1.00			1.00	1.00		1.00	1.00		1.00	
Incremental Delay, d2		0.1			12.2	0.0		1.5	0.5		0.8	
Delay (s)		19.0			35.3	18.3		9.7	7.3		8.1	
Level of Service		B			D	B		A	A		A	
Approach Delay (s)		19.0			32.9			8.8			8.1	
Approach LOS		B			C			A			A	

Intersection Summary			
HCM 2000 Control Delay	15.0	HCM 2000 Level of Service	B
HCM 2000 Volume to Capacity ratio	0.58		
Actuated Cycle Length (s)	68.0	Sum of lost time (s)	10.0
Intersection Capacity Utilization	70.8%	ICU Level of Service	C
Analysis Period (min)	15		

c Critical Lane Group

Movement	EBL	EBT	EBR	WBL	WBT	WBR	NBL	NBT	NBR	SBL	SBT	SBR
Lane Configurations												
Volume (vph)	490	75	720	90	90	30	550	225	25	20	150	410
Ideal Flow (vphpl)	1900	1900	1900	1900	1900	1900	1900	1900	1900	1900	1900	1900
Total Lost time (s)	5.0	5.5	5.5	5.0	5.0		5.5	5.5			5.5	5.5
Lane Util. Factor	0.97	1.00	1.00	1.00	1.00		0.91	0.91			0.95	0.95
Frpb, ped/bikes	1.00	1.00	0.96	1.00	0.99		1.00	1.00			0.99	0.98
Flpb, ped/bikes	1.00	1.00	1.00	1.00	1.00		1.00	1.00			1.00	1.00
Frt	1.00	1.00	0.85	1.00	0.96		1.00	0.99			0.93	0.85
Flt Protected	0.95	1.00	1.00	0.95	1.00		0.95	0.97			1.00	1.00
Satd. Flow (prot)	3433	1863	1518	1770	1780		1610	3275			1631	1467
Flt Permitted	0.95	1.00	1.00	0.95	1.00		0.95	0.97			1.00	1.00
Satd. Flow (perm)	3433	1863	1518	1770	1780		1610	3275			1631	1467
Peak-hour factor, PHF	0.91	0.91	0.91	0.91	0.91	0.91	0.91	0.91	0.91	0.91	0.91	0.91
Adj. Flow (vph)	538	82	791	99	99	33	604	247	27	22	165	451
RTOR Reduction (vph)	0	0	559	0	12	0	0	4	0	0	25	236
Lane Group Flow (vph)	538	82	232	99	120	0	302	572	0	0	306	71
Confl. Peds. (#/hr)	10		10	10		10	10		10	10		10
Turn Type	Prot	NA	Perm	Prot	NA		Split	NA		Split	NA	Perm
Protected Phases	7	4		3	8		2	2		6	6	
Permitted Phases			4									6
Actuated Green, G (s)	16.0	23.2	23.2	4.0	11.7		28.1	28.1			23.2	23.2
Effective Green, g (s)	16.0	23.2	23.2	4.0	11.7		28.1	28.1			23.2	23.2
Actuated g/C Ratio	0.16	0.23	0.23	0.04	0.12		0.28	0.28			0.23	0.23
Clearance Time (s)	5.0	5.5	5.5	5.0	5.0		5.5	5.5			5.5	5.5
Vehicle Extension (s)	2.0	2.0	2.0	2.0	2.0		2.0	2.0			2.0	2.0
Lane Grp Cap (vph)	549	432	352	70	208		452	920			378	340
v/s Ratio Prot	c0.16	0.04		0.06	0.07		c0.19	0.17			c0.19	
v/s Ratio Perm			c0.15									0.05
v/c Ratio	0.98	0.19	0.66	1.41	0.58		0.67	0.62			0.81	0.21
Uniform Delay, d1	41.8	30.8	34.8	48.0	41.8		31.8	31.3			36.3	31.0
Progression Factor	1.00	1.00	1.00	1.00	1.00		1.00	1.00			1.00	1.00
Incremental Delay, d2	32.7	0.1	3.4	251.5	2.4		7.6	3.2			11.4	0.1
Delay (s)	74.6	30.9	38.2	299.5	44.2		39.5	34.5			47.7	31.1
Level of Service	E	C	D	F	D		D	C			D	C
Approach Delay (s)		51.6			153.6			36.2			39.7	
Approach LOS		D			F			D			D	

Intersection Summary			
HCM 2000 Control Delay	52.4	HCM 2000 Level of Service	D
HCM 2000 Volume to Capacity ratio	0.79		
Actuated Cycle Length (s)	100.0	Sum of lost time (s)	21.5
Intersection Capacity Utilization	81.7%	ICU Level of Service	D
Analysis Period (min)	15		

c Critical Lane Group

Movement	EBL	EBT	EBR	WBL	WBT	WBR	NBL	NBT	NBR	SBL	SBT	SBR
Lane Configurations												
Volume (vph)	125	25	100	60	10	50	130	530	40	30	620	175
Ideal Flow (vphpl)	1900	1900	1900	1900	1900	1900	1900	1900	1900	1900	1900	1900
Total Lost time (s)		4.9			4.9		4.4	4.9		4.4	4.9	
Lane Util. Factor		1.00			1.00		1.00	1.00		1.00	1.00	
Frpb, ped/bikes		0.98			0.98		1.00	1.00		1.00	0.99	
Flpb, ped/bikes		0.99			0.99		1.00	1.00		1.00	1.00	
Frt		0.95			0.94		1.00	0.99		1.00	0.97	
Flt Protected		0.98			0.98		0.95	1.00		0.95	1.00	
Satd. Flow (prot)		1679			1678		1770	1837		1770	1784	
Flt Permitted		0.79			0.71		0.95	1.00		0.95	1.00	
Satd. Flow (perm)		1360			1223		1770	1837		1770	1784	
Peak-hour factor, PHF	0.92	0.92	0.92	0.92	0.92	0.92	0.92	0.92	0.92	0.92	0.92	0.92
Adj. Flow (vph)	136	27	109	65	11	54	141	576	43	33	674	190
RTOR Reduction (vph)	0	34	0	0	36	0	0	3	0	0	14	0
Lane Group Flow (vph)	0	238	0	0	94	0	141	616	0	33	850	0
Confl. Peds. (#/hr)	10		10	10		10	10		10	10		10
Turn Type	Perm	NA		Perm	NA		Prot	NA		Prot	NA	
Protected Phases		4			8		5	2		1	6	
Permitted Phases	4			8								
Actuated Green, G (s)		16.0			16.0		8.1	43.2		1.6	36.7	
Effective Green, g (s)		16.0			16.0		8.1	43.2		1.6	36.7	
Actuated g/C Ratio		0.21			0.21		0.11	0.58		0.02	0.49	
Clearance Time (s)		4.9			4.9		4.4	4.9		4.4	4.9	
Vehicle Extension (s)		2.0			2.0		2.0	2.0		2.0	2.0	
Lane Grp Cap (vph)		290			260		191	1058		37	872	
v/s Ratio Prot							c0.08	0.34		0.02	c0.48	
v/s Ratio Perm		c0.18			0.08							
v/c Ratio		0.82			0.36		0.74	0.58		0.89	0.98	
Uniform Delay, d1		28.1			25.1		32.4	10.1		36.6	18.7	
Progression Factor		1.11			1.00		0.85	1.72		1.00	1.00	
Incremental Delay, d2		13.4			0.3		8.6	1.6		103.2	25.0	
Delay (s)		44.7			25.5		36.2	19.0		139.8	43.7	
Level of Service		D			C		D	B		F	D	
Approach Delay (s)		44.7			25.5			22.2			47.2	
Approach LOS		D			C			C			D	

Intersection Summary			
HCM 2000 Control Delay	36.3	HCM 2000 Level of Service	D
HCM 2000 Volume to Capacity ratio	0.90		
Actuated Cycle Length (s)	75.0	Sum of lost time (s)	14.2
Intersection Capacity Utilization	80.9%	ICU Level of Service	D
Analysis Period (min)	15		

c Critical Lane Group

Movement	WBL	WBR	NBT	NBR	SBL	SBT
Lane Configurations						
Volume (vph)	150	250	500	150	150	620
Ideal Flow (vphpl)	1900	1900	1900	1900	1900	1900
Total Lost time (s)	5.0		5.0		5.0	5.0
Lane Util. Factor	1.00		1.00		1.00	1.00
Frt	0.92		0.97		1.00	1.00
Flt Protected	0.98		1.00		0.95	1.00
Satd. Flow (prot)	1674		1805		1770	1863
Flt Permitted	0.98		1.00		0.24	1.00
Satd. Flow (perm)	1674		1805		455	1863
Peak-hour factor, PHF	0.97	0.97	0.97	0.97	0.97	0.97
Adj. Flow (vph)	155	258	515	155	155	639
RTOR Reduction (vph)	76	0	18	0	0	0
Lane Group Flow (vph)	337	0	652	0	155	639
Turn Type	Prot		NA		Perm	NA
Protected Phases	8		2			6
Permitted Phases					6	
Actuated Green, G (s)	14.0		22.8		22.8	22.8
Effective Green, g (s)	14.0		22.8		22.8	22.8
Actuated g/C Ratio	0.30		0.49		0.49	0.49
Clearance Time (s)	5.0		5.0		5.0	5.0
Vehicle Extension (s)	2.0		2.0		2.0	2.0
Lane Grp Cap (vph)	500		879		221	907
v/s Ratio Prot	c0.20		c0.36			0.34
v/s Ratio Perm					0.34	
v/c Ratio	0.67		0.74		0.70	0.70
Uniform Delay, d1	14.4		9.6		9.3	9.4
Progression Factor	1.00		1.00		1.00	1.00
Incremental Delay, d2	2.8		3.0		7.9	2.1
Delay (s)	17.2		12.6		17.3	11.4
Level of Service	B		B		B	B
Approach Delay (s)	17.2		12.6			12.6
Approach LOS	B		B			B

Intersection Summary			
HCM 2000 Control Delay	13.6	HCM 2000 Level of Service	B
HCM 2000 Volume to Capacity ratio	0.71		
Actuated Cycle Length (s)	46.8	Sum of lost time (s)	10.0
Intersection Capacity Utilization	79.9%	ICU Level of Service	D
Analysis Period (min)	15		
c Critical Lane Group			

Movement	EBL	EBT	WBT	WBR	SBL	SBR
Lane Configurations						
Volume (vph)	255	700	860	425	430	270
Ideal Flow (vphpl)	1900	1900	1900	1900	1900	1900
Total Lost time (s)	4.0	4.5	4.5		4.5	4.5
Lane Util. Factor	1.00	0.95	0.95		1.00	1.00
Frt	1.00	1.00	0.95		1.00	0.85
Flt Protected	0.95	1.00	1.00		0.95	1.00
Satd. Flow (prot)	1770	3539	3364		1770	1583
Flt Permitted	0.95	1.00	1.00		0.95	1.00
Satd. Flow (perm)	1770	3539	3364		1770	1583
Peak-hour factor, PHF	0.97	0.97	0.97	0.97	0.97	0.97
Adj. Flow (vph)	263	722	887	438	443	278
RTOR Reduction (vph)	0	0	78	0	0	199
Lane Group Flow (vph)	263	722	1247	0	443	79
Turn Type	Prot	NA	NA		Prot	Perm
Protected Phases	7	4	8		6	
Permitted Phases						6
Actuated Green, G (s)	12.9	44.6	27.7		21.4	21.4
Effective Green, g (s)	12.9	44.6	27.7		21.4	21.4
Actuated g/C Ratio	0.17	0.59	0.37		0.29	0.29
Clearance Time (s)	4.0	4.5	4.5		4.5	4.5
Vehicle Extension (s)	2.0	2.0	2.0		2.0	2.0
Lane Grp Cap (vph)	304	2104	1242		505	451
v/s Ratio Prot	c0.15	0.20	c0.37		c0.25	
v/s Ratio Perm						0.05
v/c Ratio	0.87	0.34	1.00		0.88	0.18
Uniform Delay, d1	30.2	7.7	23.7		25.5	20.2
Progression Factor	1.13	0.34	0.72		0.82	0.81
Incremental Delay, d2	11.7	0.2	23.2		11.4	0.0
Delay (s)	45.8	2.8	40.4		32.4	16.4
Level of Service	D	A	D		C	B
Approach Delay (s)		14.3	40.4		26.2	
Approach LOS		B	D		C	

Intersection Summary			
HCM 2000 Control Delay	28.5	HCM 2000 Level of Service	C
HCM 2000 Volume to Capacity ratio	0.93		
Actuated Cycle Length (s)	75.0	Sum of lost time (s)	13.0
Intersection Capacity Utilization	86.2%	ICU Level of Service	E
Analysis Period (min)	15		
c Critical Lane Group			

Movement	EBL	EBT	EBR	WBL	WBT	WBR	NBL	NBT	NBR	SBL	SBT	SBR
Lane Configurations												
Volume (vph)	30	10	30	40	15	10	60	650	40	10	650	40
Ideal Flow (vphpl)	1900	1900	1900	1900	1900	1900	1900	1900	1900	1900	1900	1900
Total Lost time (s)		5.5			5.5		5.5	5.5		5.5	5.5	
Lane Util. Factor		1.00			1.00		1.00	1.00		1.00	1.00	
Frpb, ped/bikes		0.98			1.00		1.00	1.00		1.00	1.00	
Flpb, ped/bikes		1.00			0.99		1.00	1.00		0.99	1.00	
Frt		0.94			0.98		1.00	0.99		1.00	0.99	
Flt Protected		0.98			0.97		0.95	1.00		0.95	1.00	
Satd. Flow (prot)		1687			1748		1770	1843		1760	1843	
Flt Permitted		0.83			0.77		0.95	1.00		0.95	1.00	
Satd. Flow (perm)		1429			1387		1770	1843		1760	1843	
Peak-hour factor, PHF	0.95	0.95	0.95	0.95	0.95	0.95	0.95	0.95	0.95	0.95	0.95	0.95
Adj. Flow (vph)	32	11	32	42	16	11	63	684	42	11	684	42
RTOR Reduction (vph)	0	29	0	0	10	0	0	2	0	0	2	0
Lane Group Flow (vph)	0	46	0	0	59	0	63	724	0	11	724	0
Confl. Peds. (#/hr)	10		10	10		10	10		10	10		10
Turn Type	Perm	NA		Perm	NA		Prot	NA		Prot	NA	
Protected Phases		4			8		5	2		1	6	
Permitted Phases	4			8								
Actuated Green, G (s)		5.4			5.4		2.8	31.5		0.4	29.1	
Effective Green, g (s)		5.4			5.4		2.8	31.5		0.4	29.1	
Actuated g/C Ratio		0.10			0.10		0.05	0.59		0.01	0.54	
Clearance Time (s)		5.5			5.5		5.5	5.5		5.5	5.5	
Vehicle Extension (s)		2.0			2.0		2.0	2.0		2.0	2.0	
Lane Grp Cap (vph)		143			139		92	1079		13	996	
v/s Ratio Prot							c0.04	c0.39		0.01	0.39	
v/s Ratio Perm		0.03			c0.04							
v/c Ratio		0.32			0.43		0.68	0.67		0.85	0.73	
Uniform Delay, d1		22.5			22.7		25.1	7.6		26.7	9.3	
Progression Factor		1.00			1.00		1.00	1.00		1.00	1.00	
Incremental Delay, d2		0.5			0.8		15.5	1.3		162.2	2.3	
Delay (s)		23.0			23.5		40.5	8.9		188.9	11.6	
Level of Service		C			C		D	A		F	B	
Approach Delay (s)		23.0			23.5			11.4			14.3	
Approach LOS		C			C			B			B	

Intersection Summary			
HCM 2000 Control Delay	13.7	HCM 2000 Level of Service	B
HCM 2000 Volume to Capacity ratio	0.68		
Actuated Cycle Length (s)	53.8	Sum of lost time (s)	16.5
Intersection Capacity Utilization	61.8%	ICU Level of Service	B
Analysis Period (min)	15		

c Critical Lane Group

Movement	EBL	EBT	EBR	WBL	WBT	WBR	NBL	NBT	NBR	SBL	SBT	SBR
Lane Configurations												
Volume (vph)	150	100	120	100	125	50	75	550	125	70	550	100
Ideal Flow (vphpl)	1900	1900	1900	1900	1900	1900	1900	1900	1900	1900	1900	1900
Total Lost time (s)		4.9			4.9		4.4	5.8		4.4	5.5	
Lane Util. Factor		1.00			1.00		1.00	0.95		1.00	1.00	
Frpb, ped/bikes		0.99			0.99		1.00	0.99		1.00	0.99	
Flpb, ped/bikes		1.00			1.00		1.00	1.00		1.00	1.00	
Frt		0.96			0.98		1.00	0.97		1.00	0.98	
Flt Protected		0.98			0.98		0.95	1.00		0.95	1.00	
Satd. Flow (prot)		1723			1769		1770	3415		1770	1624	
Flt Permitted		0.71			0.72		0.95	1.00		0.95	1.00	
Satd. Flow (perm)		1255			1290		1770	3415		1770	1624	
Peak-hour factor, PHF	0.93	0.93	0.93	0.93	0.93	0.93	0.93	0.93	0.93	0.93	0.93	0.93
Adj. Flow (vph)	161	108	129	108	134	54	81	591	134	75	591	108
RTOR Reduction (vph)	0	26	0	0	12	0	0	24	0	0	8	0
Lane Group Flow (vph)	0	372	0	0	284	0	81	701	0	75	691	0
Confl. Peds. (#/hr)	10		10	10		10	10		10	10		10
Parking (#/hr)											0	
Turn Type	Perm	NA		Perm	NA		Prot	NA		Prot	NA	
Protected Phases		4			8		5	2		1	6	
Permitted Phases	4			8								
Actuated Green, G (s)		25.3			25.3		5.2	29.7		4.9	29.7	
Effective Green, g (s)		25.3			25.3		5.2	29.7		4.9	29.7	
Actuated g/C Ratio		0.34			0.34		0.07	0.40		0.07	0.40	
Clearance Time (s)		4.9			4.9		4.4	5.8		4.4	5.5	
Vehicle Extension (s)		2.0			2.0		2.0	2.0		2.0	2.0	
Lane Grp Cap (vph)		423			435		122	1352		115	643	
v/s Ratio Prot							c0.05	0.21		0.04	c0.43	
v/s Ratio Perm		c0.30			0.22							
v/c Ratio		0.88			0.65		0.66	0.52		0.65	1.07	
Uniform Delay, d1		23.4			21.1		34.0	17.2		34.2	22.6	
Progression Factor		1.00			0.96		1.00	1.00		1.00	1.00	
Incremental Delay, d2		17.9			1.3		10.1	1.4		9.7	57.3	
Delay (s)		41.3			21.7		44.1	18.6		43.9	80.0	
Level of Service		D			C		D	B		D	E	
Approach Delay (s)		41.3			21.7			21.2			76.5	
Approach LOS		D			C			C			E	

Intersection Summary			
HCM 2000 Control Delay	43.6	HCM 2000 Level of Service	D
HCM 2000 Volume to Capacity ratio	0.96		
Actuated Cycle Length (s)	75.0	Sum of lost time (s)	15.1
Intersection Capacity Utilization	80.4%	ICU Level of Service	D
Analysis Period (min)	15		
c Critical Lane Group			

Movement	EBL	EBT	EBR	WBL	WBT	WBR	NBL	NBT	NBR	SBL	SBT	SBR
Lane Configurations												
Volume (vph)	100	225	225	75	200	150	100	400	75	100	520	150
Ideal Flow (vphpl)	1900	1900	1900	1900	1900	1900	1900	1900	1900	1900	1900	1900
Total Lost time (s)		4.0	4.0		4.0		5.5	5.5		4.0	5.5	
Lane Util. Factor		1.00	1.00		1.00		1.00	1.00		1.00	0.95	
Frpb, ped/bikes		1.00	1.00		1.00		1.00	1.00		1.00	0.99	
Flpb, ped/bikes		1.00	1.00		1.00		1.00	1.00		1.00	1.00	
Frt		1.00	0.85		0.95		1.00	0.98		1.00	0.97	
Flt Protected		0.98	1.00		0.99		0.95	1.00		0.95	1.00	
Satd. Flow (prot)		1831	1583		1758		1770	1819		1770	3390	
Flt Permitted		0.66	1.00		0.74		0.39	1.00		0.95	1.00	
Satd. Flow (perm)		1235	1583		1309		726	1819		1770	3390	
Peak-hour factor, PHF	0.98	0.97	0.97	0.97	0.97	0.97	0.97	0.97	0.97	0.97	0.97	0.98
Adj. Flow (vph)	102	232	232	77	206	155	103	412	77	103	536	153
RTOR Reduction (vph)	0	0	157	0	26	0	0	9	0	0	34	0
Lane Group Flow (vph)	0	334	75	0	412	0	103	480	0	103	655	0
Confl. Peds. (#/hr)	10											10
Turn Type	Perm	NA	Perm	Perm	NA		Perm	NA		Prot	NA	
Protected Phases		4			8			2		1	6	
Permitted Phases	4		4	8			2					
Actuated Green, G (s)		24.2	24.2		24.2		30.5	30.5		6.8	41.3	
Effective Green, g (s)		24.2	24.2		24.2		30.5	30.5		6.8	41.3	
Actuated g/C Ratio		0.32	0.32		0.32		0.41	0.41		0.09	0.55	
Clearance Time (s)		4.0	4.0		4.0		5.5	5.5		4.0	5.5	
Vehicle Extension (s)		2.0	2.0		2.0		2.0	2.0		2.0	2.0	
Lane Grp Cap (vph)		398	510		422		295	739		160	1866	
v/s Ratio Prot								c0.26		c0.06	0.19	
v/s Ratio Perm		0.27	0.05		c0.31		0.14					
v/c Ratio		0.84	0.15		0.98		0.35	0.65		0.64	0.35	
Uniform Delay, d1		23.6	18.1		25.1		15.4	17.9		32.9	9.4	
Progression Factor		1.00	1.00		0.80		0.68	0.79		1.00	1.00	
Incremental Delay, d2		13.8	0.0		28.3		1.9	2.5		18.3	0.5	
Delay (s)		37.4	18.1		48.5		12.3	16.6		51.2	9.9	
Level of Service		D	B		D		B	B		D	A	
Approach Delay (s)		29.5			48.5			15.9			15.3	
Approach LOS		C			D			B			B	

Intersection Summary			
HCM 2000 Control Delay	24.9	HCM 2000 Level of Service	C
HCM 2000 Volume to Capacity ratio	0.78		
Actuated Cycle Length (s)	75.0	Sum of lost time (s)	13.5
Intersection Capacity Utilization	86.9%	ICU Level of Service	E
Analysis Period (min)	15		

c Critical Lane Group

Movement	EBL	EBT	WBT	WBR	SBL	SBR
Lane Configurations						
Volume (vph)	390	960	940	185	100	720
Ideal Flow (vphpl)	1900	1900	1900	1900	1900	1900
Lane Width	12	12	12	12	11	11
Total Lost time (s)	4.0	4.5	4.0		4.0	4.0
Lane Util. Factor	1.00	0.95	0.95		1.00	0.88
Frt	1.00	1.00	0.98		1.00	0.85
Flt Protected	0.95	1.00	1.00		0.95	1.00
Satd. Flow (prot)	1593	3539	3452		1711	2694
Flt Permitted	0.95	1.00	1.00		0.95	1.00
Satd. Flow (perm)	1593	3539	3452		1711	2694
Peak-hour factor, PHF	0.97	0.97	0.97	0.97	0.97	0.97
Adj. Flow (vph)	402	990	969	191	103	742
RTOR Reduction (vph)	0	0	17	0	0	4
Lane Group Flow (vph)	402	990	1143	0	103	738
Parking (#/hr)	0					
Turn Type	Prot	NA	NA		Prot	pm+ov
Protected Phases	7	4	8		6	7
Permitted Phases						6
Actuated Green, G (s)	22.8	56.6	30.3		9.9	32.7
Effective Green, g (s)	22.8	56.6	30.3		9.9	32.7
Actuated g/C Ratio	0.30	0.75	0.40		0.13	0.44
Clearance Time (s)	4.0	4.5	4.0		4.0	4.0
Vehicle Extension (s)	2.0	2.0	2.0		2.0	2.0
Lane Grp Cap (vph)	484	2670	1394		225	1318
v/s Ratio Prot	c0.25	0.28	c0.33		0.06	c0.17
v/s Ratio Perm						0.10
v/c Ratio	0.83	0.37	0.82		0.46	0.56
Uniform Delay, d1	24.3	3.1	19.9		30.1	15.8
Progression Factor	1.00	1.00	0.95		1.10	1.15
Incremental Delay, d2	11.1	0.0	4.2		0.5	0.3
Delay (s)	35.4	3.2	23.2		33.7	18.5
Level of Service	D	A	C		C	B
Approach Delay (s)		12.5	23.2		20.3	
Approach LOS		B	C		C	

Intersection Summary			
HCM 2000 Control Delay	18.1	HCM 2000 Level of Service	B
HCM 2000 Volume to Capacity ratio	0.80		
Actuated Cycle Length (s)	75.0	Sum of lost time (s)	12.0
Intersection Capacity Utilization	69.0%	ICU Level of Service	C
Analysis Period (min)	15		
c Critical Lane Group			

Movement	EBL	EBT	EBR	WBL	WBT	WBR	SEL	SET	SER	NWL	NWT	NWR
Lane Configurations												
Volume (vph)	40	700	320	295	795	40	40	66	40	290	50	215
Ideal Flow (vphpl)	1900	1900	1900	1900	1900	1900	1900	1900	1900	1900	1900	1900
Lane Width	11	12	11	11	12	12	10	10	10	11	12	11
Total Lost time (s)	4.5	4.5		4.5	4.5		4.5	4.5		4.5	4.5	4.5
Lane Util. Factor	1.00	0.95		1.00	0.95		1.00	1.00		1.00	1.00	1.00
Frpb, ped/bikes	1.00	0.99		1.00	1.00		1.00	1.00		1.00	1.00	1.00
Flpb, ped/bikes	1.00	1.00		1.00	1.00		1.00	1.00		0.99	1.00	1.00
Frt	1.00	0.95		1.00	0.99		1.00	0.94		1.00	1.00	0.85
Flt Protected	0.95	1.00		0.95	1.00		0.95	1.00		0.95	1.00	1.00
Satd. Flow (prot)	1540	3009		1540	3121		1486	1476		1527	1509	1378
Flt Permitted	0.95	1.00		0.95	1.00		0.72	1.00		0.69	1.00	1.00
Satd. Flow (perm)	1540	3009		1540	3121		1131	1476		1104	1509	1378
Peak-hour factor, PHF	0.97	0.94	0.94	0.94	0.94	0.97	0.97	0.97	0.97	0.94	0.97	0.94
Adj. Flow (vph)	41	745	340	314	846	41	41	68	41	309	52	229
RTOR Reduction (vph)	0	71	0	0	4	0	0	28	0	0	0	190
Lane Group Flow (vph)	41	1014	0	314	883	0	41	81	0	309	52	39
Confl. Peds. (#/hr)			10	10						10		10
Confl. Bikes (#/hr)			10			10						
Bus Blockages (#/hr)	0	0	6	0	6	0	0	0	0	0	0	0
Parking (#/hr)											0	
Turn Type	Prot	NA		Prot	NA		Perm	NA		Perm	NA	Over
Protected Phases	7	4		3	8			6			2	3
Permitted Phases							6			2		
Actuated Green, G (s)	4.6	25.5		12.8	33.7		23.2	23.2		23.2	23.2	12.8
Effective Green, g (s)	4.6	25.5		12.8	33.7		23.2	23.2		23.2	23.2	12.8
Actuated g/C Ratio	0.06	0.34		0.17	0.45		0.31	0.31		0.31	0.31	0.17
Clearance Time (s)	4.5	4.5		4.5	4.5		4.5	4.5		4.5	4.5	4.5
Vehicle Extension (s)	2.0	2.0		2.0	2.0		2.0	2.0		2.0	2.0	2.0
Lane Grp Cap (vph)	94	1023		262	1402		349	456		341	466	235
v/s Ratio Prot	0.03	c0.34		c0.20	0.28			0.05			0.03	0.03
v/s Ratio Perm							0.04			c0.28		
v/c Ratio	0.44	0.99		1.20	0.63		0.12	0.18		0.91	0.11	0.17
Uniform Delay, d1	33.9	24.6		31.1	15.9		18.6	18.9		24.9	18.5	26.5
Progression Factor	1.28	0.87		0.70	1.57		1.00	1.00		0.88	0.76	2.23
Incremental Delay, d2	1.1	25.6		107.3	1.1		0.1	0.1		25.5	0.0	1.5
Delay (s)	44.7	47.0		129.1	26.0		18.6	19.0		47.3	14.1	60.7
Level of Service	D	D		F	C		B	B		D	B	E
Approach Delay (s)		46.9			52.9			18.9			49.6	
Approach LOS		D			D			B			D	

Intersection Summary			
HCM 2000 Control Delay	48.4	HCM 2000 Level of Service	D
HCM 2000 Volume to Capacity ratio	1.00		
Actuated Cycle Length (s)	75.0	Sum of lost time (s)	13.5
Intersection Capacity Utilization	87.1%	ICU Level of Service	E
Analysis Period (min)	15		

c Critical Lane Group

Movement	EBL	EBT	EBR	WBL	WBT	WBR	NBL	NBT	NBR	SBL	SBT	SBR
Lane Configurations												
Volume (vph)	260	770	100	10	765	45	70	7	10	122	21	450
Ideal Flow (vphpl)	1900	1900	1900	1900	1900	1900	1900	1900	1900	1900	1900	1900
Total Lost time (s)	5.0	5.0		5.0	5.0			4.9			5.0	5.0
Lane Util. Factor	1.00	0.95		1.00	0.95			1.00			1.00	1.00
Frpb, ped/bikes	1.00	1.00		1.00	1.00			1.00			1.00	0.98
Flpb, ped/bikes	1.00	1.00		0.99	1.00			0.99			0.99	1.00
Frt	1.00	0.98		1.00	0.99			0.98			1.00	0.85
Flt Protected	0.95	1.00		0.95	1.00			0.96			0.96	1.00
Satd. Flow (prot)	1593	3461		1760	3505			1748			1774	1549
Flt Permitted	0.95	1.00		0.95	1.00			0.63			0.73	1.00
Satd. Flow (perm)	1593	3461		1760	3505			1153			1356	1549
Peak-hour factor, PHF	0.91	0.91	0.91	0.91	0.91	0.91	0.91	0.91	0.91	0.91	0.91	0.91
Adj. Flow (vph)	286	846	110	11	841	49	77	8	11	134	23	495
RTOR Reduction (vph)	0	9	0	0	5	0	0	7	0	0	0	290
Lane Group Flow (vph)	286	947	0	11	885	0	0	89	0	0	157	205
Confl. Peds. (#/hr)	10		10	10		10	10		10	10		10
Parking (#/hr)	0											
Turn Type	Prot	NA		Prot	NA		Perm	NA		Perm	NA	Perm
Protected Phases	7	4		3	8			2			6	
Permitted Phases							2			6		6
Actuated Green, G (s)	17.0	44.2		0.8	28.0			15.1			15.0	15.0
Effective Green, g (s)	17.0	44.2		0.8	28.0			15.1			15.0	15.0
Actuated g/C Ratio	0.23	0.59		0.01	0.37			0.20			0.20	0.20
Clearance Time (s)	5.0	5.0		5.0	5.0			4.9			5.0	5.0
Vehicle Extension (s)	2.0	2.0		2.0	2.0			2.0			2.0	2.0
Lane Grp Cap (vph)	361	2039		18	1308			232			271	309
v/s Ratio Prot	c0.18	0.27		0.01	c0.25							
v/s Ratio Perm								0.08			0.12	c0.13
v/c Ratio	0.79	0.46		0.61	0.68			0.38			0.58	0.66
Uniform Delay, d1	27.3	8.7		36.9	19.7			25.9			27.1	27.7
Progression Factor	1.10	0.52		1.00	1.00			1.00			1.00	1.00
Incremental Delay, d2	9.5	0.7		36.2	1.1			0.4			1.9	4.1
Delay (s)	39.5	5.2		73.1	20.8			26.3			29.0	31.8
Level of Service	D	A		E	C			C			C	C
Approach Delay (s)		13.1			21.4			26.3			31.1	
Approach LOS		B			C			C			C	

Intersection Summary			
HCM 2000 Control Delay	20.2	HCM 2000 Level of Service	C
HCM 2000 Volume to Capacity ratio	0.71		
Actuated Cycle Length (s)	75.0	Sum of lost time (s)	15.0
Intersection Capacity Utilization	72.9%	ICU Level of Service	C
Analysis Period (min)	15		
c Critical Lane Group			

Movement	EBL	EBT	EBR	WBL	WBT	WBR	SEL	SET	SER	NWL	NWT	NWR
Lane Configurations												
Volume (vph)	94	12	64	55	15	55	50	530	120	50	405	35
Ideal Flow (vphpl)	1900	1900	1900	1900	1900	1900	1900	1900	1900	1900	1900	1900
Total Lost time (s)		5.0			5.0		5.0	5.0		5.0	5.0	
Lane Util. Factor		1.00			1.00		1.00	0.95		1.00	0.95	
Frpb, ped/bikes		0.99			0.99		1.00	0.99		1.00	1.00	
Flpb, ped/bikes		1.00			1.00		1.00	1.00		1.00	1.00	
Frt		0.95			0.94		1.00	0.97		1.00	0.99	
Flt Protected		0.97			0.98		0.95	1.00		0.95	1.00	
Satd. Flow (prot)		1699			1693		1770	3414		1770	3485	
Flt Permitted		0.77			0.78		0.95	1.00		0.95	1.00	
Satd. Flow (perm)		1344			1346		1770	3414		1770	3485	
Peak-hour factor, PHF	0.97	0.97	0.97	0.98	0.97	0.98	0.98	0.98	0.97	0.97	0.98	0.98
Adj. Flow (vph)	97	12	66	56	15	56	51	541	124	52	413	36
RTOR Reduction (vph)	0	37	0	0	47	0	0	18	0	0	6	0
Lane Group Flow (vph)	0	138	0	0	80	0	51	647	0	52	443	0
Confl. Peds. (#/hr)	10		10	10		10	10		10	10		10
Turn Type	Perm	NA		Perm	NA		Prot	NA		Prot	NA	
Protected Phases		4			8		1			5	2	
Permitted Phases	4			8				6				
Actuated Green, G (s)		12.7			12.7		6.4	42.6		4.7	40.9	
Effective Green, g (s)		12.7			12.7		6.4	42.6		4.7	40.9	
Actuated g/C Ratio		0.17			0.17		0.09	0.57		0.06	0.55	
Clearance Time (s)		5.0			5.0		5.0	5.0		5.0	5.0	
Vehicle Extension (s)		2.0			2.0		2.0	2.0		2.0	2.0	
Lane Grp Cap (vph)		227			227		151	1939		110	1900	
v/s Ratio Prot							0.03			c0.03	0.13	
v/s Ratio Perm		c0.10			0.06			c0.19				
v/c Ratio		0.61			0.35		0.34	0.33		0.47	0.23	
Uniform Delay, d1		28.9			27.5		32.3	8.6		34.0	8.9	
Progression Factor		1.00			1.00		0.88	1.31		1.00	1.00	
Incremental Delay, d2		3.2			0.3		0.0	0.0		1.2	0.3	
Delay (s)		32.0			27.9		28.6	11.4		35.1	9.2	
Level of Service		C			C		C	B		D	A	
Approach Delay (s)		32.0			27.9			12.6			11.9	
Approach LOS		C			C			B			B	

Intersection Summary			
HCM 2000 Control Delay	15.9	HCM 2000 Level of Service	B
HCM 2000 Volume to Capacity ratio	0.40		
Actuated Cycle Length (s)	75.0	Sum of lost time (s)	15.0
Intersection Capacity Utilization	50.0%	ICU Level of Service	A
Analysis Period (min)	15		

c Critical Lane Group

Movement	EBL	EBT	WBT	WBR	SBL	SBR
Lane Configurations						
Volume (vph)	149	663	342	291	460	221
Ideal Flow (vphpl)	1900	1900	1900	1900	1900	1900
Total Lost time (s)	5.0	5.0	5.0	5.0	5.0	5.0
Lane Util. Factor	1.00	0.95	0.95	1.00	0.97	0.91
Frpb, ped/bikes	1.00	1.00	1.00	0.97	1.00	0.98
Flpb, ped/bikes	1.00	1.00	1.00	1.00	0.99	1.00
Frt	1.00	1.00	1.00	0.85	0.99	0.85
Flt Protected	0.95	1.00	1.00	1.00	0.95	1.00
Satd. Flow (prot)	1593	3185	3185	1381	3046	1273
Flt Permitted	0.95	1.00	1.00	1.00	0.95	1.00
Satd. Flow (perm)	1593	3185	3185	1381	3046	1273
Peak-hour factor, PHF	0.95	0.95	0.95	0.95	0.95	0.95
Adj. Flow (vph)	157	698	360	306	484	233
RTOR Reduction (vph)	0	0	0	227	4	150
Lane Group Flow (vph)	157	698	360	79	503	60
Confl. Peds. (#/hr)	10			10	10	10
Turn Type	Prot	NA	NA	Perm	Perm	Perm
Protected Phases	7	4	8			
Permitted Phases				8	6	6
Actuated Green, G (s)	8.3	26.4	13.1	13.1	14.6	14.6
Effective Green, g (s)	8.3	26.4	13.1	13.1	14.6	14.6
Actuated g/C Ratio	0.16	0.52	0.26	0.26	0.29	0.29
Clearance Time (s)	5.0	5.0	5.0	5.0	5.0	5.0
Vehicle Extension (s)	2.0	2.0	2.0	2.0	2.0	2.0
Lane Grp Cap (vph)	259	1648	818	354	871	364
v/s Ratio Prot	c0.10	c0.22	0.11			
v/s Ratio Perm				0.06	c0.17	0.05
v/c Ratio	0.61	0.42	0.44	0.22	0.58	0.17
Uniform Delay, d1	19.8	7.6	15.9	14.9	15.6	13.6
Progression Factor	1.00	1.00	1.00	1.00	1.00	1.00
Incremental Delay, d2	2.7	0.1	0.1	0.1	0.6	0.1
Delay (s)	22.6	7.7	16.0	15.1	16.1	13.7
Level of Service	C	A	B	B	B	B
Approach Delay (s)		10.4	15.6		15.4	
Approach LOS		B	B		B	

Intersection Summary			
HCM 2000 Control Delay	13.6	HCM 2000 Level of Service	B
HCM 2000 Volume to Capacity ratio	0.56		
Actuated Cycle Length (s)	51.0	Sum of lost time (s)	15.0
Intersection Capacity Utilization	52.5%	ICU Level of Service	A
Analysis Period (min)	15		

c Critical Lane Group

Movement	EBL	EBT	EBR	WBL	WBT	WBR	NBL	NBT	NBR	SBL	SBT	SBR
Lane Configurations												
Volume (vph)	56	931	35	38	523	49	24	4	24	102	7	50
Ideal Flow (vphpl)	1900	1900	1900	1900	1900	1900	1900	1900	1900	1900	1900	1900
Total Lost time (s)	5.0	5.0		5.0	5.0			5.0	5.0		5.0	5.0
Lane Util. Factor	1.00	0.95		1.00	0.95			1.00	1.00		1.00	1.00
Frpb, ped/bikes	1.00	1.00		1.00	1.00			1.00	0.98		1.00	0.98
Flpb, ped/bikes	1.00	1.00		1.00	1.00			0.99	1.00		0.99	1.00
Frt	1.00	0.99		1.00	0.99			1.00	0.85		1.00	0.85
Flt Protected	0.95	1.00		0.95	1.00			0.96	1.00		0.96	1.00
Satd. Flow (prot)	1770	3516		1770	3483			1776	1553		1768	1553
Flt Permitted	0.95	1.00		0.95	1.00			0.72	1.00		0.72	1.00
Satd. Flow (perm)	1770	3516		1770	3483			1336	1553		1327	1553
Peak-hour factor, PHF	0.94	0.94	0.94	0.94	0.94	0.94	0.94	0.94	0.94	0.94	0.94	0.94
Adj. Flow (vph)	60	990	37	40	556	52	26	4	26	109	7	53
RTOR Reduction (vph)	0	2	0	0	5	0	0	0	21	0	0	43
Lane Group Flow (vph)	60	1025	0	40	603	0	0	30	5	0	116	10
Confl. Peds. (#/hr)	10		10	10		10	10		10	10		10
Turn Type	Prot	NA		Prot	NA		Perm	NA	Perm	Perm	NA	Perm
Protected Phases	7	4		3	8			2			6	
Permitted Phases							2		2	6		6
Actuated Green, G (s)	4.1	26.2		2.3	24.4			10.4	10.4		10.4	10.4
Effective Green, g (s)	4.1	26.2		2.3	24.4			10.4	10.4		10.4	10.4
Actuated g/C Ratio	0.08	0.49		0.04	0.45			0.19	0.19		0.19	0.19
Clearance Time (s)	5.0	5.0		5.0	5.0			5.0	5.0		5.0	5.0
Vehicle Extension (s)	2.0	2.0		2.0	2.0			2.0	2.0		2.0	2.0
Lane Grp Cap (vph)	134	1709		75	1576			257	299		256	299
v/s Ratio Prot	c0.03	c0.29		0.02	0.17							
v/s Ratio Perm								0.02	0.00		c0.09	0.01
v/c Ratio	0.45	0.60		0.53	0.38			0.12	0.02		0.45	0.03
Uniform Delay, d1	23.8	10.0		25.3	9.8			18.0	17.6		19.2	17.7
Progression Factor	1.00	1.00		1.00	1.00			1.00	1.00		1.00	1.00
Incremental Delay, d2	0.9	0.4		3.6	0.1			0.1	0.0		0.5	0.0
Delay (s)	24.7	10.4		28.9	9.8			18.0	17.6		19.7	17.7
Level of Service	C	B		C	A			B	B		B	B
Approach Delay (s)		11.2			11.0			17.8			19.1	
Approach LOS		B			B			B			B	

Intersection Summary			
HCM 2000 Control Delay	12.0	HCM 2000 Level of Service	B
HCM 2000 Volume to Capacity ratio	0.57		
Actuated Cycle Length (s)	53.9	Sum of lost time (s)	15.0
Intersection Capacity Utilization	57.2%	ICU Level of Service	B
Analysis Period (min)	15		

c Critical Lane Group

Movement	WBL	WBR	NBT	NBR	SBL	SBT
Lane Configurations						
Volume (veh/h)	30	75	695	75	80	680
Sign Control	Stop		Free			Free
Grade	0%		0%			0%
Peak Hour Factor	0.88	0.88	0.88	0.88	0.88	0.88
Hourly flow rate (vph)	34	85	790	85	91	773
Pedestrians						
Lane Width (ft)						
Walking Speed (ft/s)						
Percent Blockage						
Right turn flare (veh)						
Median type			None			None
Median storage veh)						
Upstream signal (ft)			1175			441
pX, platoon unblocked	0.81	1.00			1.00	
vC, conflicting volume	1744	395			875	
vC1, stage 1 conf vol						
vC2, stage 2 conf vol						
vCu, unblocked vol	1789	388			870	
tC, single (s)	6.8	6.9			4.1	
tC, 2 stage (s)						
tF (s)	3.5	3.3			2.2	
p0 queue free %	34	86			88	
cM capacity (veh/h)	52	609			769	

Direction, Lane #	WB 1	NB 1	NB 2	NB 3	SB 1	SB 2
Volume Total	119	395	395	85	91	773
Volume Left	34	0	0	0	91	0
Volume Right	85	0	0	85	0	0
cSH	150	1700	1700	1700	769	1700
Volume to Capacity	0.80	0.23	0.23	0.05	0.12	0.45
Queue Length 95th (ft)	126	0	0	0	10	0
Control Delay (s)	86.6	0.0	0.0	0.0	10.3	0.0
Lane LOS	F				B	
Approach Delay (s)	86.6	0.0			1.1	
Approach LOS	F					

Intersection Summary			
Average Delay	6.1		
Intersection Capacity Utilization	48.7%	ICU Level of Service	A
Analysis Period (min)	15		

Movement	EBL	EBT	EBR	WBL	WBT	WBR	NBL	NBT	NBR	SBL	SBT	SBR
Lane Configurations												
Sign Control		Stop			Stop			Stop			Stop	
Volume (vph)	218	22	5	1	15	39	4	107	3	32	151	241
Peak Hour Factor	0.86	0.86	0.86	0.86	0.86	0.86	0.86	0.86	0.86	0.86	0.86	0.86
Hourly flow rate (vph)	304	31	7	1	21	54	6	149	3	45	211	336

Direction, Lane #	EB 1	WB 1	NB 1	SB 1
Volume Total (vph)	342	77	158	592
Volume Left (vph)	304	1	6	45
Volume Right (vph)	7	54	3	336
Hadj (s)	0.20	-0.39	0.03	-0.29
Departure Headway (s)	6.4	6.5	6.4	5.3
Degree Utilization, x	0.61	0.14	0.28	0.88
Capacity (veh/h)	539	494	524	664
Control Delay (s)	18.8	10.6	11.9	34.1
Approach Delay (s)	18.8	10.6	11.9	34.1
Approach LOS	C	B	B	D

Intersection Summary			
Delay	25.1		
Level of Service	D		
Intersection Capacity Utilization	69.5%	ICU Level of Service	C
Analysis Period (min)	15		

Movement	NBL	NBT	SBT	SBR	SEL	SER
Lane Configurations						
Volume (veh/h)	5	735	800	50	35	25
Sign Control		Free	Free		Stop	
Grade		0%	0%		0%	
Peak Hour Factor	0.92	0.92	0.92	0.92	0.92	0.92
Hourly flow rate (vph)	5	799	870	54	38	27
Pedestrians						
Lane Width (ft)						
Walking Speed (ft/s)						
Percent Blockage						
Right turn flare (veh)						
Median type		None	None			
Median storage veh)						
Upstream signal (ft)		748	431			
pX, platoon unblocked	0.64				0.75	0.64
vC, conflicting volume	924				1707	897
vC1, stage 1 conf vol						
vC2, stage 2 conf vol						
vCu, unblocked vol	607				1159	564
tC, single (s)	4.1				6.4	6.2
tC, 2 stage (s)						
tF (s)	2.2				3.5	3.3
p0 queue free %	99				76	92
cM capacity (veh/h)	626				160	338

Direction, Lane #	NB 1	NB 2	SB 1	SE 1
Volume Total	5	799	924	65
Volume Left	5	0	0	38
Volume Right	0	0	54	27
cSH	626	1700	1700	205
Volume to Capacity	0.01	0.47	0.54	0.32
Queue Length 95th (ft)	1	0	0	32
Control Delay (s)	10.8	0.0	0.0	30.5
Lane LOS	B			D
Approach Delay (s)	0.1		0.0	30.5
Approach LOS				D

Intersection Summary			
Average Delay	1.1		
Intersection Capacity Utilization	55.3%	ICU Level of Service	B
Analysis Period (min)	15		

Morena Blvd Station Area Planning Study

Appendix E:

Trip Generation Supporting Materials

Vehicle Trip Generation Comparison

Existing		Adopted Community Plan		Preferred Land Use Alternative	
Land Use Type	**Daily Vehicle Trips**	**Land Use Type**	**Daily Vehicle Trips**	**Land Use Type**	**Daily Vehicle Trips**
Commercial	68,000	Commercial	73,000	Commercial	44,000
Industrial	19,000	Industrial	20,000	Industrial	1,000
Institutional	2,000	Institutional	3,000	Institutional	-
Office	7,000	Office	7,000	Office	1,000
Residential	6,000	Residential	9,000	Residential	35,000
Total	**102,000**	**Total Trips**	**112,000**	**Total Trips**	**81,000**

Notes:

- Excludes traffic associated with University of San Diego
- Totals may not reflect exact numbers used in traffic model due to generalized land use assumptions
- See Appendix E for full trip generation inputs

Source: City of San Diego Planning, Neighborhoods & Economic Development Dept.

Morena Smart Growth Study Area : Land Use Inventory as of 4/16/2014

Existing Land Use

Existing LU Code	Existing LU Desc	Major Category	Existing DU's	Existing Floor Area/Metric	Rate	Trips Generated
1110	Single Family Detached	Residential	9	0	9.0	81
1120	Single Family Multiple-Units	Residential	21	0	9.0	189
1210	MF Residential less or equal 20 DU/acre	Residential	16	0	8.0	128
1220	MF Residential over 20 DU/acre	Residential	686	0	6.0	4,116
1300	Mobile Home Park	Residential	202	0	5.0	1,010
1409	Other Group Quarters Facility	Institutional	0	30	2.4	72
1501	Hotel (Low-Rise)	Commercial	0	101	10.0	1,010
1504	Motel	Commercial	0	13	9.0	117
2101	Industrial Park	Industrial	0	788981	16.0	12,624
2103	Light Industry - General	Industrial	0	315172	15.0	4,728
2104	Warehousing	Industrial	0	402202	5.0	2,011
2105	Public Storage	Commercial	0	100996	2.0	202
5005	Specialty Commercial (Seaport Village - Tourist)	Commercial	0	3716	40.0	149
5006	Automobile Dealership	Commercial	0	73458	50.0	3,673
5007	Arterial Commercial	Commercial	0	590787	40.0	23,631
5007	MF Residential over 20 DU/acre (mixed use development)	Residential	48	0	6.0	288
5008	Service Station	Commercial	0	8	130.0	1,040
5009	Other Retail Trade and Strip Commercial	Commercial	0	16000	40.0	640
5010	Restaurant (Fast Food with or without drive-through)	Commercial	0	9371	700.0	6,560
5011	Restaurant (High Turnover sit-down)	Commercial	0	37593	130.0	4,887
5011	MF Residential over 20 DU/acre (mixed use development)	Residential	8	0	6.0	48
5012	Restaurant (Quality)	Commercial	0	19234	100.0	1,923
5012	MF Residential over 20 DU/acre (mixed use development)	Residential	6	0	6.0	36
5014	Convenience Market Chain (Open Up to 16 Hours Per Day)	Commercial	0	10720	500.0	5,360
5015	Convenience Market Chain (Open 24 Hours)	Commercial	0	8678	375.0	3,254
5019	Furniture Store	Commercial	0	202037	6.0	1,212
5020	Nursery	Commercial	0	22651	40.0	906
5022	Financial Insitiution (with a drive-through)	Commercial	0	17134	200.0	3,427
5023	Carwash (Full service)	Commercial	0	1	900.0	900
5025	Service Station (with food mart)	Commercial	0	22	150.0	3,300
5027	Service Station (with food mart and automated carwash)	Commercial	0	8	155.0	1,240
5028	Automobile Parts Sale	Commercial	0	32825	62.0	2,035
5029	Automobile Repair Shop	Commercial	0	61172	20.0	1,223
5030	Automobile Tire Store	Commercial	0	1344	25.0	34
6002	Office (Low-Rise - less or equal to 100,000 SF)	Office	0	333572	18.9	6,305
6007	Medical Office (less or equal to 100,000 SF)	Office	0	16465	50.0	823
6102	Religious Facility (without day care)	Institutional	0	6299	5.0	31
6105	Fire/Police Station	Institutional	0	33863	30.0	1,016
6109	Other Public Services	Institutional	0	106455	10.0	1,065
6509	Other Health Care	Commercial	0	21383	50.0	1,069
7601	Park - Active	Institutional	0	0.303604224	2.5	1

Adopted Land Use

Adopted LU Code	Adopted LU Desc	Major Category	Adopted DU's	Adopted Floor Area	Rate	Trips Generated
1120	Single Family Multiple-Units	Residential	34	0	9.0	306.0
1210	MF Residential less or equal 20 DU/acre	Residential	3	0	8.0	24.0
1220	MF Residential over 20 DU/acre	Residential	700	3156	6.0	4,200.0
1300	Mobile Home Park	Residential	202	0	5.0	1,010.0
1400	Group Quarters	Institutional	0	30	2.4	72.0
1501	Hotel (Low-Rise)	Commercial	0	101	10.0	1,010.0
1504	Motel	Commercial	0	13	9.0	117.0
2101	Industrial Park	Industrial	0	806178	16.0	12,898.8
2103	Light Industry - General	Industrial	0	315172	15.0	4,727.6
2104	Warehousing	Industrial	0	402202	5.0	2,011.0
2105	Public Storage	Commercial	0	100996	2.0	202.0
5005	Specialty Commercial (Seaport Village - Tourist)	Commercial	0	2716	40.0	108.6
5006	Automobile Dealership	Commercial	0	73458	40.0	2,938.3
5007	Arterial Commercial	Commercial	0	772453	50.0	38,622.7
5007	MF Residential over 20 DU/acre (mixed use development)	Residential	519	0	6.0	3,114.0
5008	Service Station	Commercial	0	8	130.0	1,040.0
5009	Other Retail Trade and Strip Commercial	Commercial	0	16000	40.0	640.0
5010	Restaurant (Fast Food with or without drive-through)	Commercial	0	3595	700.0	2,516.5
5011	Restaurant (High Turnover sit-down)	Commercial	0	37593	130.0	4,887.1
5011	MF Residential over 20 DU/acre (mixed use development)	Residential	8		6.0	48.0
5012	Restaurant (Quality)	Commercial	0	19234	100.0	1,923.4
5012	MF Residential over 20 DU/acre (mixed use development)	Residential	6		6.0	36.0
5014	Convenience Market Chain (Open Up to 16 Hours Per Day)	Commercial	0	10720	500.0	5,360.0
5015	Convenience Market Chain (Open 24 Hours)	Commercial	0	7915	375.0	2,968.1
5019	Furniture Store	Commercial	0	202037	6.0	1,212.2
5020	Nursery	Commercial	0	22651	40.0	906.0
5022	Financial Insitiution (with a drive-through)	Commercial	0	17134	200.0	3,426.8
5023	Carwash (Full service)	Commercial	0	1	900.0	0.9
5025	Service Station (with food mart)	Commercial	0	10	150.0	1,500.0
5028	Automobile Parts Sale	Commercial	0	32825	62.0	2,035.2
5029	Automobile Repair Shop	Commercial	0	60143	20.0	1,202.9
5030	Automobile Tire Store	Commercial	0	1344	25.0	33.6
6002	Office (Low-Rise - less or equal to 100,000 SF)	Office	0	325452	18.9	6,151.0
6007	Medical Office (less or equal to 100,000 SF)	Office	0	16465	50.0	823.3
6102	Religious Facility (without day care)	Institutional	0	6299	5.0	31.5
6105	Fire/Police Station	Institutional	0	33863	30.0	1,015.9
6109	Other Public Services	Institutional	0	106455	10.0	1,064.6
6509	Other Health Care	Institutional	0	21383	50.0	1,069.2
7211	Park - Active	Institutional	0	0.303604224	2.5	0.8

Proposed Land Use

Proposed LU Code	Proposed LU Desc	Major Category	Proposed DU's	Proposed Floor Area	Rate	Trips Generated
1120	Single Family Multiple-Units	Residential	18	0	9.0	162.0
1210	MF Residential less or equal 20 DU/acre	Residential	3	0	8.0	24.0
1220	MF Residential over 20 DU/acre	Commercial	0	24581	40.0	983.2
1220	MF Residential over 20 DU/acre - Units	Residential	1637	0	6.0	9,822.0
1400	Group Quarters	Institutional	0	30	2.4	72.0
1501	Hotel (Low-Rise)	Commercial	0	101	2.4	242.4
1504	Motel	Commercial	0	13	2.4	31.2
2101	Industrial Park	Industrial	0	707923	16.0	1,132.3
2103	Light Industry - General	Industrial	0	33748	15.0	50.6
2104	Warehousing	Industrial	0	390298	5.0	195.1
2105	Public Storage	Commercial	0	100996	2.0	20.2
5004	Neighborhood Shopping Center (30,000 SF or more)	Commercial	0	40184	40.0	1,607.4
5004	Neighborhood Shopping Center (30,000 SF or more) - Units	Residential	455	0	6.0	2,730.0
5005	Specialty Commercial (Seaport Village - Tourist)	Commercial	0	2716	40.0	10.9
5006	Automobile Dealership	Commercial	0	73458	50.0	367.2
5007	Arterial Commercial	Commercial	0	738159	40.0	29,526.4
5007	Arterial Commercial - Units	Residential	3162	0	6.0	18,972.0
5008	Service Station	Commercial	0	10	130.0	1,300.0
5010	Restaurant (Fast Food with or without drive-through)	Commercial	0	3595	700.0	2,516.5
5011	Restaurant (High Turnover sit-down)	Commercial	0	28485	130.0	3,703.1
5011	Restaurant (High Turnover sit-down) - Units	Residential	8	0	6.0	48.0
5012	Restaurant (Quality)	Commercial	0	19234	100.0	1,923.4
5012	Restaurant (Quality) - Units	Residential	6	0	6.0	36.0
5014	Convenience Market Chain (Open Up to 16 Hours Per Day)	Commercial	0	4240	500.0	211.9
5015	Convenience Market Chain (Open 24 Hours)	Commercial	0	5515	375.0	206.8
5020	Nursery	Commercial	0	12557	40.0	50.2
5023	Carwash (Full service)	Commercial	0	1	900.0	900.0
5025	Service Station (with food mart)	Commercial	0	10	6.0	60.0
5028	Automobile Parts Sale	Commercial	0	4284	62.0	26.6
5029	Automobile Repair Shop	Commercial	0	14918	20.0	29.8
6002	Office (Low-Rise - less or equal to 100,000 SF)	Office	0	299543	18.9	566.0
6002	Office (Low-Rise - less or equal to 100,000 SF) - Units	Residential	535		6.0	3,210.0
6007	Medical Office (less or equal to 100,000 SF)	Office	0	16465	50.0	82.3
6102	Religious Facility (without day care)	Institutional	0	6299	5.0	3.1
6105	Fire/Police Station	Institutional	0	33863	30.0	101.6
6109	Other Public Services	Institutional	0	106455	20.0	212.8
6509	Other Health Care	Institutional	0	21383	50.0	106.9
7601	Park - Active	Institutional	0	0.303604224	2.5	0.8

City LU Code	Model Code	LU Description	Unit	Veh Trip rate
1110	112	Single Family Detached	DU	9.0
1120	113	Single Family Multiple-Units (less or equal 20 DU/acre)	DU	9.0
1120	114	Single Family Multiple-Units (over 20 DU/acre)	DU	8.0
1190	9101	Single Family Residential Without Units	acre	0.0
1210	121	MF Residential less or equal 20 DU/acre	DU	8.0
1220	122	MF Residential over 20 DU/acre	DU	6.0
1290	9101	Multi-Family Residential Without Units	acre	0.0
1300	131	Mobile Home Park	DU	5.0
1402	1412	Dormitory (USD)	bed	2.4
1409	1419	Other Group Quarters Facility (USD)	bed	2.4
1501	1511	Hotel (Low-Rise)	room	10.0
1504	1514	Motel	room	9.0
2101	2111	Industrial Park	ksf	16.0
2103	2113	Light Industry - General	ksf	15.0
2104	2114	Warehousing	ksf	5.0
2105	2115	Public Storage	ksf	2.0
4112	4112	Freeway	acre	0.0
4113	4113	Communications and Utilities	acre	2.5
4114	4114	Parking Lot - Surface	acre	0.0
4117	4112	Railroad Right of Way	acre	0.0
4118	4112	Road Right of Way	acre	0.0
5005	5055	Specialty Commercial	ksf	40.0
5006	5056	Automobile Dealership	ksf	50.0
5007	5057	Arterial Commercial	ksf	40.0
5008	5058	Service Station (pumps omly)	fueling space	130.0
5009	5059	Other Retail Trade and Strip Commercial	ksf	40.0
5010	5060	Restaurant (Fast Food with or without drive-through)	ksf	700.0
5011	5011	Restaurant (High Turnover sit-down)	ksf	130.0
5012	5012	Restaurant (Quality)	ksf	100.0
5014	5014	Convenience Market (16 hours)	ksf	500.0
5015	5015	Liquor store (open 12 hrs)	ksf	375.0
5019	5019	Furniture Store	ksf	6.0
5020	5020	Nursery	ksf	40.0
5022	5022	Financial Insitiution (with a drive-through)	ksf	200.0
5023	5023	Carwash (Full service)	site	900.0
5025	5025	Service Station (with food mart)	fueling space	150.0
5027	5027	Service Station (with food mart and automated carwash)	fueling space	155.0
5028	5028	Automobile Parts Sale	ksf	62.0
5029	5029	Automobile Repair Shop	ksf	20.0
5030	5030	Automobile Tire Store	ksf	25.0
6002	6014	Office (10.1ksf - 20ksf)	ksf	26.7
6002	6015	Office (20.1ksf - 35ksf))	ksf	23.1
6002	6016	Office (35.1ksf - 50ksf))	ksf	20.8
6002	6013	Office (5.1ksf to 10ksf)	ksf	31.6
6002	6017	Office (50.1ksf - 75ksf)	ksf	18.9
6002	6018	Office (75.1ksf - 140 ksf)	ksf	16.5
6002	6012	Office (under 5ksf))	ksf	39.0
6007	6019	Medical Office (less or equal to 100,000 SF)	ksf	50.0
6102	6122	Religious Facility (without day care)	ksf	5.0
6105	6125	Fire/Police Station	ksf	30.0
6109	6126	Other Public Services	ksf	10.0
6509	6519	Other Health Care	ksf	50.0
6802	6812	Other University or College (USD - 4 yrs college)	student	2.5
6806	6816	Elementary School	student	2.9
7201	7201	Tourist Attraction	acre	0.0
7204	7214	Golf Course	acre	8.0
7207	7207	Marina	acre	20.0
7210	7210	Other Recreation - High	acre	0.0
7211	7211	Other Recreation - Low	acre	0.0
7601	7601	Park - Active	acre	50.0
7603	7603	Open Space Park or Preserve	acre	5.0
7606	7606	Landscape Open Space	acre	0.0
7607	7607	Residential Recreation	acre	0.0
9101	9101	Vacant and Undeveloped Land	acre	0.0
9201	9200	Bay or Lagoon	acre	0.0
9500	9500	Under Construction	acre	0.0
9501	9500	Residential Under Construction	acre	0.0

EXISTING

Extg LU Code	Extg LU Desc	Extg DUs	Extg Floor Area	Prpsd Num of Pumps	Prpsd Num of Rooms	Prpsd Num of Students	Prpsd Num of Beds	Acres
1110	Single Family Detached	9	0					1.72
1120	Single Family Multiple-Units	21	0					1.04
1210	DU/acre	16	0					1.61
1220	MF Residential over 20 DU/acre	686	0					17.66
1290	Multi-Family Residential Without Units	0	0					0.09
1300	Mobile Home Park	202	0					11.39
1409	Other Group Quarters Facility	0	13225				30	0.79
1501	Hotel (Low-Rise)	0	33657		101			1.39
1504	Motel	0	4532		13			0.15
2101	Industrial Park	0	788981					37.16
2103	Light Industry - General	0	315172					17.47
2104	Warehousing	0	402202					12.81
2105	Public Storage	0	100996					2.52
4111	Rail Station/Transit Center	0						1.27
4113	Communications and Utilities	0						4.56
4114	Parking Lot - Surface	0	5055					8.43
4117	Railroad Right of Way	0						7.98
4118	Road Right of Way	0	0					0.93
5005	Tourist)	0	3716					0.21
5006	Automobile Dealership	0	73458					7.27
5007	Arterial Commercial	48	590787					26.51
5008	Service Station	0	1287	8				0.2
5009	Commercial	0	16000					0.34
5010	drive-through)	0	9371					1.43
5011	Restaurant (High Turnover sit-down)	8	37593					2.54
5012	Restaurant (Quality)	6	19234					0.62
5014	to 16 Hours Per Day)	0	10720					0.71
5015	Hours)	0	8678					0.43
5019	Furniture Store	0	202037					6.68
5020	Nursery	0	22651					1.24
5022	through)	0	17134					0.77
5023	Carwash (Full service)	0	2800					0.32
5025	Service Station (with food mart)	0	5100	22				0.76
5027	automated carwash)	0	2245	8				0.56
5028	Automobile Parts Sale	0	32825					1.05
5029	Automobile Repair Shop	0	61172					3.97
5030	Automobile Tire Store	0	1344					0.07
6002	100,000 SF)	0	333572					9.12
6007	100,000 SF)	0	16465					0.83
6102	Religious Facility (without day care)	0	6299					0.42
6105	Fire/Police Station	0	33863					4.03
6109	Other Public Services	0	106455					5.63
6509	Other Health Care	0	21383					0.77
6802	Other University or College	0	58876					2.39
7211	Other Recreation - Low	0	11345					0.34
7601	Park - Active	0	13225					0.73
7603	Open Space Park or Preserve	0	0					1.94
9101	Vacant and Undeveloped Land	0	0					8.77
9500	Under Construction	0						0.58

ADOPTED

Adptd LU Code	Adptd LU Desc	Adptd DUs	Adptd Floor Area	Adptd Num of Pumps	Adptd Num of Rooms	Adptd Num of Students	Adptd Num of Beds	Acres
1120	Multiple-Units	34	0					1.29
1210	or equal 20	3	0					0.15
1220	over 20 DU/acre	700	3156					17.69
1290	Residential	0	0					0.08
1300	Mobile Home Park	202	0					11.39
1400	Group Quarters	0	13225				30	0.79
1501	Hotel (Low-Rise)	0	33657		101			1.39
1504	Motel	0	4532		13			0.15
2101	Industrial Park	0	806178					37.16
2103	General	0	315172					17.47
2104	Warehousing	0	402202					12.81
2105	Public Storage	0	100996					2.52
4111	Center	0	0					1.27
4113	and Utilities	0	0					4.56
4114	Surface	0	0					2.06
4117	Way	0	0					7.98
4118	Road Right of Way	0	0					0.93
5005	Commercial	0	2716					0.14
5006	Dealership	0	73458					7.01
5007	Commercial	519	772453	20				43.18
5008	Service Station	0	1287	8				0.2
5009	and Strip	0	16000					0.34
5010	Food with or	0	3595					0.22
5011	Turnover sit-down)	8	37593					2.54
5012	(Quality)	6	19234					0.62
5014	Market Chain	0	10720					0.71
5015	Market Chain	0	7915					0.37
5019	Furniture Store	0	202037					6.68
5020	Nursery	0	22651					1.24
5022	Insitiution (with a	0	17134					0.77
5023	service)	0	2800					0.32
5025	(with food mart)	0	4250	10				0.47
5028	Sale	0	32825					1.05
5029	Shop	0	60143					3.6
5030	Store	0	1344					0.07
6002	less or equal to	0	325452					8.98
6007	(less or equal to	0	16465					0.83
6102	(without day care)	0	6299					0.42
6105	Fire/Police Station	0	33863					4.03
6109	Services	0	106455					5.63
6509	Other Health Care	0	21383					0.77
6802	College	0	58876					2.39
7211	Other Recreation - Low	0	11345					0.34
7601	Park - Active	0	13225					0.73
7603	Open Space Park or Preserve	0	0					1.94
9101	Vacant and Undeveloped Land	0	9414					4.94

PROPOSED

Prpsd LU Code	Prpsd LU Desc	Prpsd DUs	Prpsd Floor Area	Prpsd Num of Pumps	Prpsd Num of Rooms	Prpsd Num of Students	Prpsd Num of Beds	Acres
1120	Family	18	0					0.73
1210	Residenti	3	0					0.15
1220	Residenti	1637	24581					35.54
1290	Family	0	0					0.08
1400	Quarters	0	13225				30	0.79
1501	(Low-	0	33657		101			1.39
1504	Motel	0	4532		13			0.15
2101	Park	0	707923					33.15
2103	Industry -	0	33748					3.53
2104	ing	0	390298					12.18
2105	Storage	0	100996					2.52
4111	Station/Tr	0	0					1.27
4113	cations	0	0					4.56
4114	Lot -	0	0					1.81
4117	Right of	0	0					7.98
4118	Right of	0	0					0.14
5004	hood	455	40184					6.15
5005	Commerci	0	2716					0.14
5006	le	0	73458					7.01
5007	Commerci	3162	738159	20				59.01
5008	Station	0	1287	8				0.2
5010	t (Fast	0	3595					0.22
5011	t (High	8	28485					1.45
5012	t (Quality)	6	19234					0.62
5014	nce	0	4240					0.33
5015	nce	0	5515					0.14
5020	Nursery	0	12557					1.03
5023	(Full	0	2800					0.32
5025	Station	0	4250	10				0.47
5028	le Parts	0	4284					0.18
5029	le Repair	0	14918					0.74
6002	(Low-Rise	535	299543					14.49
6007	Office	0	16465					0.83
6102	Facility	0	6299					0.42
6105	e Station	0	33863					4.03
6109	Public	0	106455					5.63
6509	Health	0	21383					0.77
6802	University	0	58876					2.39
7211	Recreatio	0	3064					0.08
7601	Active	0	13225					0.73
7603	Space	0	0					1.94
9101	and	0	0					4.94

Morena Blvd Station Area Planning Study

Appendix E:

Intersection Volume Comparison

INTERSECTION VOLUME COMPARISON (PM PEAK HOUR)								
		Existing Conditions	Adopted Community Plan		Preferred Alternative (Mid-term)		Preferred Alternative (Long-term)	
#	**Intersecting Streets**	Volume	Volume	**Pct Change**	Volume	**Pct Change**	Volume	**Pct Change**
1	Morena & Gesner	1,174	1,227	**5%**	1,259	***7%***	1,421	***21%***
2	I-5 Northbound Ramps & Clairmont	2,791	3,720	**33%**	3,331	**19%**	3,283	**18%**
3	Morena & Ingulf	1,329	1,651	**24%**	1,540	**16%**	1,692	**27%**
4	Denver & Clairemont	2,875	4,027	**40%**	3,652	**27%**	3,448	**20%**
7	Morena & Milton	1,436	1,632	**14%**	1,686	**17%**	1,670	**16%**
8	Morena & Ashton	1,443	1,687	**17%**	1,776	**23%**	1,740	**21%**
9	Morena & West Morena *(north split)*	1,425	1,732	**22%**	1,748	**23%**	1,725	**21%**
10	Knoxville & East Morena	1,286	1,358	**6%**	1,622	**26%**	1,545	**20%**
11	Morena & Tecolote	1,958	2,257	**15%**	2,829	**44%**	2,975	**52%**
13	Morena & Buenos	1,404	1,350	**-4%**	1,607	**14%**	1,995	**42%**
14	West Morena & Morena *(south split)*	2,384	3,421	**43%**	2,555	**7%**	1,820	**-24%**
16	West Morena & Vega / Driveway	1,026	1,376	**34%**	1,670	**63%**	1,575	**54%**
17	West Morena & Buenos	1,207	1,565	**30%**	1,960	**62%**	2,115	**75%**
18	Morena & Napa & Sherman	2,660	2,987	**12%**	3,257	**22%**	2,320	**-13%**
19	Morena & Linda Vista	3,046	3,300	**8%**	3,954	**30%**	3,295	**8%**
20	Napa & Linda Vista	3,405	3,629	**7%**	3,794	**11%**	2,891	**-15%**
21	Marian Wy & Linda Vista	2,668	2,561	**-4%**	3,165	**19%**	2,630	**-1%**
22	Napa & Riley	1,459	1,614	**11%**	1,605	**10%**	1,485	**2%**
23	Napa & Friars	2,126	2,790	**31%**	2,825	**33%**	2,712	**28%**
24	Colusa & Friars	1,843	2,836	**54%**	2,767	**50%**	2,659	**44%**

Morena Blvd Station Area Planning Study

Appendix F:

Financial Feasibility Analysis

Preliminary Findings (version 2): Development Prototypes Financial Feasibility -- Morena Blvd. Station Area Planning Study

bae urban economics

BAE • June 25, 2013

Overview

- **BAE conducted financial feasibility analysis to help understand financial feasibility for 4 projects based on current zoning and revised "ideal TOD" zoning**
- **Financial feasibility refers to whether the value of a built project exceeds the total costs to develop**
  - The is the approach used by developers to decide whether to proceed with a project – does it "pencil out"?

The Prototype Projects

- **Looked at two hypothetical sites in the northern and southern ends of the Study Area, each 3.6 acres**
- **For each site, a mixed-use development program was created based on existing zoning and revised "ideal TOD" zoning allowing denser development**
- **Projects included ground floor retail/commercial, with upper story rental/for-sale residential**
  - Projects on "South Site" includes additional office on upper floors, in addition to upper floor residential

Summary of Development Programs

	#1: North Site, Current Zoning	#2: North Site, TOD Zoning	#3: South Site, Current Zoning	#4: South Site, TOD Zoning
Stories	3	4	3	5
Residential du	105 (29 du/acre)	267 (74 du/acre)	105 (29 du/acre)	280 (77 du/acre)
Retail gross sf	24,000	56,000	40,000	32,000
Office gross sf	0	0	72,000	72,000
Parking spaces	215	505	441	648
Parking - configuration	Surface	Podium – 2 level	Commercial: surface, partial 2nd floor deck Residential: Podium, 2 level	Podium – 2 level

Feasibility Analysis

- **Prepared "pro formas" that model financial results at stabilization (i.e. built-out and fully leased)**
- **Prepared a separate pro forma for each project with rental residential, along with two for-sale residential pro formas for the "ideal TOD zoning" sites**
- **Pro formas measure "residual land value" – how much developers can afford to pay for sites**
  - Compared it with current market values, what developers interviewed said can be paid to have a project pencil out

Key Assumptions from Pro Formas

- **Hard construction costs for residential is $130/sf; for commercial space $100/sf – excludes TI, parking**
- **Per space parking costs range from $5,000 for surface, to $13,500 for one-level podium, to $18,000 for two-level podium**
- **Includes all City impact fees**
- **Soft costs at 20% of hard costs**
- **Developer profit at 10% of value of project**

Key Assumptions from Pro Formas, *cont'd*

- **Residential unit sizes range from 550 sf for studios; 700 sf for 1-BR; 1,050 sf for 2-BR; 1,300 sf for 3-BR**
- **Monthly rental residential rates are $1,600 for studio; $1,800 for 1-BR; $2,250 for 2-BR**
- **For-sale residential prices are $300,000 for 1-BR; $375,000 for 2-BR; and $450,000 for 3-BR**
  - More competitive than Downtown, Mission Valley (Civita)

Key Assumptions from Pro Formas, *cont'd*

- **Monthly retail rents at $2.50 per sf/mo, triple-net**
  - Higher than most existing space, but lower than existing Morena Station TOD project retail space
- **Monthly office rents at $3.33 per sf/mo, full-service gross**
  - Current market rent of $2 per sf/mo makes office infeasible
  - Represents future rents with much stronger office market
- **Capitalization rates for valuation are 6% for rental residential, 6.5% for office, 7.5% for retail**

Findings

- **The projects using existing zoning are not feasible**
  - Only able to support approximately half of the land value needed for the projects to proceed
- **Rental residential projects with TOD zoning is just feasible – supports land values $80 - $85 per site sf**
- **Office is not feasible at present – rents need to rise by 2/3 to support including office**

Findings, *cont'd*

- **For-sale residential projects support considerably higher land value - $135+ per site sf**
  - Lack of for-sale development reflects financing challenges for both developer and buyers, not fundamental economics
  - For-sale residential project is strengthening, and has the potential to support near-term development (next 5 years)

Summary of Findings

MIXED-USE RENTAL RESID'L	#1: North Site, Current Zoning	#2: North Site, TOD Zoning	#3: South Site, Current Zoning	#4: South Site, TOD Zoning
Total Development Cost	$25.8 million	$70.3 million	$52.7 million	$87 million
Residual Land Value	$47 per sf	$79 per sf	$38 per sf	$86 per sf

Note: values for #3, #4 assume higher future market office rent at $3.33/mo. vs. current market rent of $2/mo.

- **#1 and #3 are only feasible with substantial subsidy from City or another source**
  - Would require $6 million+ subsidy per project

Recommendations

- **Feasibility can be enhanced in a couple ways that could increase supportable land value up to 40%+**
  - Allow up to 4 stories above ground floor uses
  - Reconfigure parking for 1-level rather than 2-levels of podium parking – means less ground floor commercial
- **Allowing zoning more supportive of TOD will be key to attracting new development to the area**
  - Larger projects also help attract more capable developers
  - Application of City's TOD Overlay parking standards

Recommendations

- **Provide flexibility on amount and types of commercial in mixed-use projects**
  - Avoid two-level podiums to reduce costs; providing flexibility on commercial space benefits parking, helps financing
  - Parking districts that capture reduced parking need for mixed-use development and share parking, reducing parking for individual projects is an example of how to implement this
  - Office development likely to be medium-term or beyond
  - Office buildings for tenants wishing to own a building may be feasible sooner – these tenants are not as price-sensitive. Same applies to potential design district-type office.

Morena Blvd Station Area Planning Study

Appendix G:

Fiscal Impact Analysis

bae urban economics

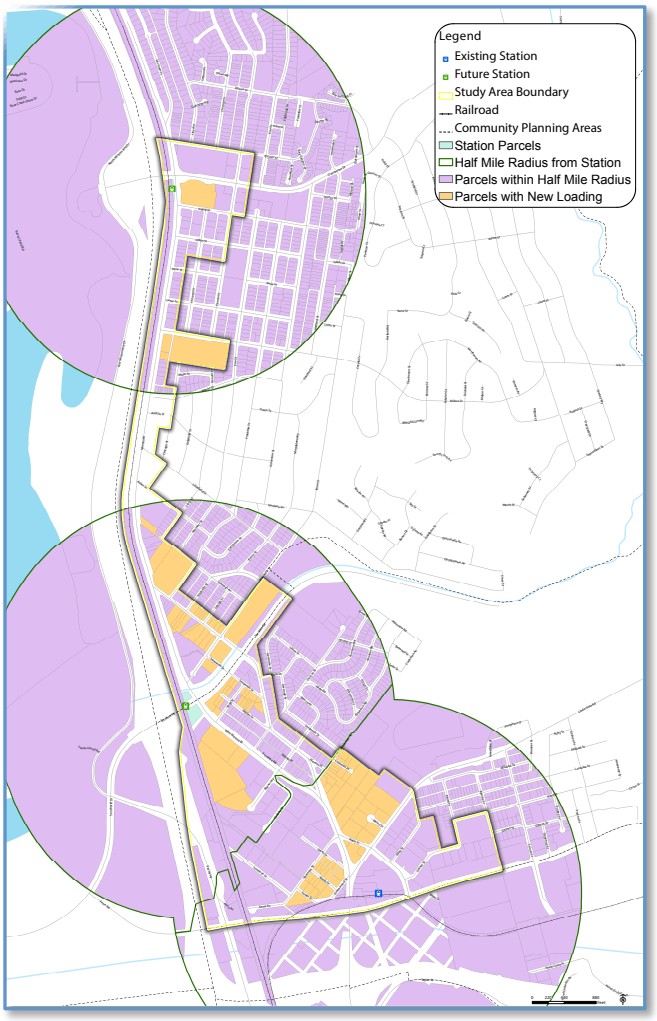

Fiscal Impact Analysis

Morena Boulevard
Station Area Planning Study

City of San Diego

February 2014

San Francisco
1285 66th Street
Second Floor
Emeryville, CA 94608
510.547.9380

Sacramento
803 2nd Street
Suite A
Davis, CA 95616
530.750.2195

Los Angeles
5405 Wilshire Blvd.
Suite 291
Los Angeles, CA 90036
213.471.2666

Washington DC
1436 U Street NW
Suite 403
Washington, DC 20009
202.588.8945

New York City
121 West 27th Street
Suite 705
New York, NY 10001
212.683.4486

www.bae1.com

bae urban economics

February 6, 2014

Messrs. Mike Singleton and Robert Efird
KTU+A
3916 Normal Street
San Diego, CA 92130

Dear Mike and Robb:

Enclosed is the final fiscal impact analysis for the Morena Boulevard Station Area Planning Study. This final report is based on the revised project and addresses the comments submitted by the City. Due to the unique issues raised by this project in terms of fiscal impact, it is important for readers to review the narrative explanation that accompanies the tables and charts.

Very truly yours,

Ron Golem, MCP
Principal

Sherry Rudnak, MA
Vice President

San Francisco
1285 66th Street
Second Floor
Emeryville, CA 94608
510.547.9380

Sacramento
803 2nd Street
Suite A
Davis, CA 95616
530.750.2195

Los Angeles
5405 Wilshire Blvd.
Suite 291
Los Angeles, CA 90036
213.471.2666

Washington DC
1436 U Street NW
Suite 403
Washington, DC 20009
202.588.8945

New York City
121 West 27th Street
Suite 705
New York, NY 10001
212.683.4486

www.bae1.com

Executive Summary

BAE prepared a fiscal impact model based upon the City of San Diego's Fiscal Year 2014 budget to estimate the potential net fiscal impact to the City from buildout of the Morena Boulevard Station Area Planning Study (Study) land use alternatives. The alternatives would allow for development of varying amounts of new residential and non-residential land uses within approximately one-half mile of three proposed transit stations along Morena Boulevard, between Clairemont Drive and Tecolote Road. This report presents the findings from the fiscal impact analysis for the preferred land use alternative (the Project).

Fiscal impact analysis is a tool to project the long-range cost and revenue implications of new development so that the City can understand the effects of a given land use program for the General Fund's long-term fiscal health. Because of the long-term nature of fiscal projections, and the potential for changes in many of the cost and revenue variables that cannot be foreseen in advance, the results of any fiscal impact analysis should be interpreted with care. Fiscal impact results should be considered as a high level order of magnitude indication of the trend in fiscal conditions that could be expected. Used in this way, the results of the fiscal impact analysis, along with the results of other analyses (e.g., traffic, environmental, etc.), can be a useful tool to inform consideration of land use alternatives.

The methodology for the fiscal impact analysis is presented in detail in the report. New General Fund revenues were calculated based on how new development increases property values and property taxes, as well as how the change in the number of residents and employees increases sales taxes and other City revenues. New General Fund service costs were calculated based on the increase in service population (the change in residents plus one-half the change in employees, to account for the lesser demand on services created by employees), applied to departmental costs that vary with changes in service population.

The beginning point for the fiscal impact analysis is the *net* change in built area by land uses, and associated service population, being considered by the Study. The City already collects tax revenues and provides services to existing land and built improvements, even if those improvements will be demolished for future development. Therefore, the fiscal impact bases its calculations on just the *net* change in property values and service population, for the various land uses, in order to avoid double-counting new revenues or new service costs.

Table ES-1 on the next page summarizes the development program for the Project, which would result in an increase of 4,718 dwelling units of various types of residential, and a *decrease* of approximately 164,000 square feet of retail and 492,000 square feet of office space. The decrease in existing commercial space is necessary in order to create the development sites for new residential, commercial, and mixed-use development. Most of the commercial space that would be demolished is economically obsolescent, and therefore is not generating the level of fiscal revenues, employment, and other economic benefits possible based on current market trends. It is worth noting that while the Study area would experience a decrease in commercial square footage, this does not impact the ability of the City to retain and increase its office-based employment and taxable retail sales; this activity would be expected to shift to other parts of the City, based on the availability of sites elsewhere to accommodate these uses.

Table ES-1: Project Development Program

(figures in parentheses indicate a decrease)

Land Use/Product Type	Project
Residential Dwelling Units	
Community Village	1,610
Residential - High	2,076
Residential - Medium High	966
Residential - Medium	66
TOTAL: Residential Dwelling Units	**4,718**
Commercial Square Feet	
Community Village - Retail	(164,016)
Community Village - Office	(492,049)
TOTAL: Commercial Square Feet	**(656,065)**

Sources: KTU+A; BAE, 2013.

Table ES-2, below, summarizes the net annual fiscal impact to the City's General Fund at full build-out for the program in Table ES-1. There would be a minor net negative fiscal impact (deficit) of approximately $229,000 per year at build out. While this may seem more than a minor amount, in terms of the City's $1.2 billion annual General Fund, it represents a deficit of 0.02 percent (two one-hundreds of one percent). This amount is well within the normal budgetary variation that can occur from year to year in either revenues or expenses. It is reasonable to expect that net revenues from other more intensive commercial areas of the City, such as Mission Valley and Downtown, could more than offset the negative fiscal impact that could occur in the Study area at buildout. The Study area could be complementary to these areas by offering more housing choices to employees who work in these areas.

Table ES-2: Summary of Project Net Fiscal Impact

City of San Diego General Fund Fiscal Impacts	Project
Net New Revenues	$3,808,462
Less Net New Service Costs	($4,037,647)
Net Fiscal Impact: Surplus / (Deficit)	**($229,185)**
City of San Diego FY2014 General Fund Budget (a)	$1,200,367,373
Net Fiscal Impact as % of General Fund	**-0.02%**

Notes:
Excludes capital costs, or mitigation payments, impact fees, etc. to fund new capital costs.
(a) FY2014 General Fund expenditure amount. This is slightly higher than revenues due to fund balances, as noted in the budget report.

Sources: City of San Diego; BAE, 2013.

It should be noted that an average cost approach was used to project new fiscal costs for police and fire services, due to a lack of more detailed information that could be provided by those departments. Average cost methods can overestimate the new fiscal costs for police and fire services that result from new development. This means that a more detailed study based on further assessment of the exact timing and need for new facilities, personnel, and other costs might reduce the projected net fiscal impact to a lower figure.

The above projected fiscal impact would only occur at full build-out, which could be 15 to 20 years or more in the future. Development proceeds in tandem with general economic growth and market cycles, and periods of active development are followed by periods with minimal new development. Future market shifts may also change the findings in this report.

This fiscal impact analysis is limited to annual General Fund operating revenues and costs, and does not evaluate capital improvement costs associated with Study improvements, project mitigations, or new municipal facilities. It is assumed that these capital costs would be covered by a combination of developer mitigations, development impact fees, grant funds, and other capital funds typically used by the City.

Table of Contents

INTRODUCTION 1
METHODOLOGY 2
Average Revenues and Costs 2
Marginal Revenues and Costs 3
STUDY LAND USE ALTERNATIVES 4
PROJECTED GENERAL FUND REVENUES 5
Property Taxes 5
Property Transfer Taxes 6
Property Taxes In-Lieu of VLF (ILVLF) 7
Sales Tax 8
Business Taxes 10
Licenses and Permits Fees 12
Franchise Fees 12
Fines, Forfeitures, and Penalties 13
PROJECTED GENERAL FUND COSTS 15
Current Net General Fund Costs for Services 15
PROJECTED NET FISCAL IMPACTS 26

Introduction

This report presents the findings of the fiscal impact analysis of the Morena Boulevard Station Area Planning Study (Study) land use preferred alternative (the Project). This analysis projects the operating revenues and costs that would accrue to the City of San Diego General Fund as a result of new potential development under the maximum potential development projected in the Study. The analysis focuses on the General Fund, which receives the majority of the City's discretionary revenues and funds critical public services, such as law enforcement, parks, and community services, as well as other services.

The objective of this report is to provide Study stakeholders, including the public, the consultant team, City staff, and City policymakers with a common understanding of how the Study's land use alternatives could impact the City's discretionary budget. This is essential given the City's goal to ensure that the City maintains a fiscally sustainable budget as the community grows.

The report presents the Project and general methodologies for projecting revenues and costs, followed by detailed revenue and cost projections, concluding with an analysis of the net fiscal balances for the Project.

Methodology

The major objective of any fiscal impact analysis is the determination of changes in public revenues and costs associated with new development. This study examines the potential impact that the potential new development under Project would have on revenues and expenditures accruing to the City's General Fund, based on the revenue and expenditure patterns reflected in the City's Fiscal Year 2013-2014 budget.

This analysis focuses on impacts to the City's General Fund, which represents the portion of the City's budget that finances the ongoing provision of basic services, such as police, parks and recreation, and streets. To pay for these services, the City's General Fund is dependent on discretionary revenue sources such as property taxes, sales taxes, business taxes, and various other local taxes, as well as other funds received from the State. Within this report, except as otherwise noted in the text, the annual ongoing fiscal impact of the Project is described terms of constant 2013 dollars (based on the start of Fiscal Year 2014).

The cost and revenue projections are tied to the point in time when the Project would be fully built out and new development would be fully leased up and units sold. It is important to note that there may be shifts in expenditures and revenues before the City reaches buildout, due to the service demands of ongoing development. For example, Development Services functions could require increases in staffing to handle development review and inspections during the buildout period beyond what is covered by fee recovery, which could decline once the Study area reaches buildout. It is important to note that the cost projections reflect net General Fund expenditure increases. Actual departmental budgets may increase more substantially than indicated, due to increased expenditures which are offset by new program revenues. For example, staffing increases for recreation that are funded by recreation user fees would not be reflected in the cost projections, nor would the off-setting parks user fees be reflected in revenue projections. Thus, the expenditure projections should not be interpreted as actual departmental budget forecasts, or indicative of overall staffing levels.

In addition, it should be noted that the fiscal impact analysis is structured to project the net impacts of new development only. The analysis does not project changes in costs or revenues over time associated strictly with provision of services to the City's existing base of development. For example, to the extent that increased services are provided to existing tenants, or other factors cause those services to cost more, it will not be reflected in the fiscal analysis.

Average Revenues and Costs

In many cases, discretionary revenues, as well as the cost of providing municipal services, increase proportionately with the number of residents and/or employees. As an example, when the resident and daytime populations increase, there is a need to hire additional public safety and other government employees. Likewise, when there are more local residents and employees, the City will collect more traffic fines and franchise fees. In these cases, costs and revenues are projected on an average "service population" basis.

Service Population

Accepted practice in fiscal impact analysis is to define the service population as 100 percent of residents residing within a jurisdiction plus 50 percent of employees. Calculating service population in this manner is intended to reflect the fact that local employment contributes to a jurisdiction's daytime population, thereby increasing demands for governmental services. Nonetheless residential population is generally considered to generate a larger share of demand for services; thus the discount factor for employees relative to residents when calculating service population. Table 1 shows the City of San Diego's 2013 service population.

Table 1: City of San Diego Service Population, 2013

Service Population	2013
Population	1,326,238
Employment	837,884
Service Population (a)	1,745,180

Note:
(a) Service population equals the resident population plus okys one-half the employment population

Sources: California Dept. of Finance, 2013; ACS 2012; BAE, 2013.

Marginal Revenues and Costs

While a fiscal impact methodology based on service population is an important and useful means for estimating increased revenues and costs, in some instances other approaches are more appropriate, such as estimation of the increase in revenues or costs directly attributable to a project. For example, property tax revenues are estimated on a marginal basis using the value of new construction in conjunction with the City's allocations of the one percent ad valorem property tax. Detailed marginal revenue and cost methodologies are provided in each of the relevant sections below.

Study Land Use Alternatives

KTU+A, the City's consultant for Study preparation, provided development projections at the parcel level for additional uses, local floor area ratios, and local zoning and use requirements. Although this analysis assumes that development would fully build out from the Project, real estate development is subject to market conditions that will likely fluctuate. New development could take longer to occur and stabilize than this analysis anticipates and/or demand for uses could change, resulting in developers' desiring a change in the mix of allowable uses. Table 2 shows the Project elements and the resulting net new service population.

Table 2: Study Development Program

Land Use/Product Type	Project
Residential Dwelling Units	
Community Village	1,610
Residential - High	2,076
Residential - Medium High	966
Residential - Medium	66
TOTAL: Residential Dwelling Units	**4,718**
Commercial Square Feet	
Community Village - Retail	(164,016)
Community Village - Office	(492,049)
Office	0
TOTAL: Commercial Square Feet	**(656,065)**
New Residents (a)	
Total Residents	9,955
New Employment (b)	
Retail Workers	(328)
Office Workers	(1,968)
Total Workers	(2,296)
Change in Service Population (c)	**8,807**

Notes:
Project involves a decrease in commercial sf. See report for details.
(a) Average number of residents per unit 2.11
(b) Based on the following employment densities or sq.ft./worker
Retail 500
Office 250
(c) Service population equals the resident population plus one-half the employment population.

Sources: California Dept. of Finance, 2013; KTU+A; BAE, 2013.

In total, Project includes 4,718 new housing units, but a decrease of 656,065 square feet in all types of commercial space. Under the Project, the Study area would see a population increase of more than 9,955 new residents, but a decrease of 2,296 employees, resulting in a net service population increase of 8,807 persons. The decrease in commercial space arises from the replacement of economically obsolescent commercial space with new residential, commercial, and mixed-use development. This can allow for new types of retail, service, and office space, but in a smaller footprint than that occupied by current commercial buildings.

Projected General Fund Revenues

The City receives General Fund revenues from a variety of sources. The largest sources include property taxes, property taxes in-lieu of vehicle license fees (ILVLF), and sales taxes. Other General Fund revenue sources include property transfer taxes, business taxes, other licenses and permits, franchise fees, and fines, forfeitures, and penalties. Although the City also receives revenues from Transient Occupancy Taxes (TOT), since neither development program includes a new hotel, new TOT revenues would likely be negligible.

This section of the report presents the anticipated revenues resulting from development from the Project and the methodologies and assumptions by which they are derived.

Property Taxes

Property tax revenues typically represent the largest single source of discretionary revenues that the General Fund receives, making the decrease in home values and thus property taxes in the recent Great Recession very difficult for California cities. Since the passage of Proposition 13 in 1978, property owners pay an ad-valorem property tax equal to one percent of the assessed value of their properties. The assessed value is either the sale price of the property, or the prior assessed value plus the value of any new improvements, for property for which ownership has not changed. Thus, properties are reassessed when they are sold or improved, or in the case of the economic downturn, when property owners request a reassessment. Otherwise, the increase in assessed value is statutorily capped at two percent per year.

In order to project property tax revenues from new development, this analysis estimates the net new assessed value of development using current market data, and uses parcel-level data to apply the value of land and/or improvements to the specific Tax Rate Areas (TRAs) where development is planned to occur.

Assessed Values

New development will increase the assessed value of each parcel on which development occurs. Thus, in order to project property tax revenues, the analysis first determines the assessed value of new development using market data for residential and commercial uses. Market data from the earlier Morena Boulevard Study market and financial feasibility analysis provided the basis for estimating the assessed values of new commercial and residential development, specifically $215,000 per residential unit and $205 per square foot of retail and office space.

Because land within the City is currently generating property tax revenues, this analysis excludes the existing land value from assessed value calculations. This provides a net assessed value to project the incremental property tax revenues that the City could expect under the Project.

Tax Rate Areas (TRAs)

The City receives a share of the one percent ad-valorem property taxes based on the applicable tax increment allocation factor within the Tax Rate Area (TRA) in which the development is located, with the remaining shares doing to schools, the County, and other

property-tax receiving jurisdictions. Development in the Study area would fall within one of three TRAs.[1] Depending on the TRA in which the property is located, the County Auditor-Controller allocates to the City of San Diego either 17.0 percent or 20.9 percent of the one percent ad valorem property tax.

Projected Property Tax Revenues

As Table 3 shows, building out all land uses from the Project would generate approximately $1.8 million in new annual General Fund property tax revenues.

Table 3: Property Tax Revenue Projections

(figures in parentheses indicate a decrease)

Land Use Types	**Values (a)**
Multifamily Residential, Value per Unit	$215,000
Retail, Value per Square Foot	$205
Office, Value per Square Foot	$205
New Assessed Value	**Project**
Residential	$1,014,370,000
Retail	($33,623,280)
Office	($100,870,045)
Total New Assessed Value	**$879,876,675**
City General Fund's Allocation of One Percent Ad Valorem (b)	
TRAs 08256 and 08987	0.20942190
TRA 08001	0.17067948
Projected Net New Property Tax Revenues	
TRAs 08256 and 08987	$1,469,367
TRA 08001	$355,438
Total New Property Tax Revenues to General Fund	**$1,824,805**

Notes:

(a) Does not include land values that currently contribute to the City's property tax base.

(b) The City receives an allocation of the one percent ad valorem property tax based on the tax rate area (TRA) in which the project is located.

Sources: San Diego County Auditor-Controller; KTU+A; BAE, 2013.

Property Transfer Taxes

When properties are sold, the City receives Property Transfer Tax revenues equal to $0.55 per $1,000 of assessed value, or $0.00055 per dollar of assessed value. Because the City receives this revenue when property changes ownership, the assessed value calculations include land, which currently sells for approximately $4.4 million per acre, as well as improvements for both residential and non-residential properties.

Long term trends show that owners who occupy their residential units, as well as multifamily rental and commercial property owners tend to sell their units approximately every seven years. In order to project the annual property transfer taxes that would accrue to the City's General Fund under the Project, this analysis assumes that one-seventh of all properties sell

[1] TRAs: 08001, 08256, or 08987.

each year, at which point they are reassessed to current market value pursuant to Proposition 13.

As Table 4 shows, the City could anticipate potential annual property tax transfer revenues of approximately $86,900 from the Project.

Table 4: Property Transfer Tax Revenue Projections

Assumptions	
Transfer Tax Rate per $1 of Assessed Value	$0.00055
Holding Period for Development, Years	7
New Property Transfer Tax Revenues	**Project**
Assessed Value of Improvements	$879,876,675
Land Value	$195,976,440
Total Assessed Value	$1,105,855,233
Total New Property Transfer Tax Revenues	**$86,889**
Note:	
(a) Includes the value of land and improvements (per acre)	$4,356,000

Sources: City of San Diego FY 2014 Adopted Budget; BAE, 2013.

Property Taxes In-Lieu of VLF (ILVLF)

Beginning in Fiscal Year 2005/06, the State ceased to provide "backfill" funds to counties and cities in the form of Motor Vehicle In-Lieu Fees (VLF) as it had through Fiscal Year 2004/05. As a result of the complicated financial restructuring enacted as part of the State's budget balancing process, counties and cities now receive revenues from the State in the form of what is known as property tax in-lieu of vehicle license fees, or ILVLF. This State-funded revenue source is tied to a city's total assessed valuation. In Fiscal Year 2005/06, former VLF revenues were swapped for ILVLF revenues, which set the local jurisdiction's ILVLF "base." The base increases each year thereafter in proportion to the increase in total assessed valuation within the jurisdiction. For example, if total assessed valuation increases by five percent from one year to the next, the ILVLF base and resulting revenues would increase by five percent.

In order to calculate the incremental increase in ILVLF revenues that would result from new development under the Project, the analysis first determines the total assessed value within the City, and the City's current ILVLF revenues. The analysis then determines the percentage by which full development under the Project would increase the City's assessed valuation, and applies the percentage increase to the current ILVLF revenues, generating incremental ILVLF revenues.

As Table 5 on the following page shows, from the Project, potential new development would generate a 0.48 percent increase the City's total assessed value. Applying these percentages as increases to the City's ILVLF revenues for Fiscal Year 2014, shows that development under the Project could result in new annual ILVLF revenues of approximately $527,000 from the Project.

Table 5: Property Tax In-Lieu of VLF Revenue Projections

Assumptions	FY 2014 Budget
Base Citywide Assessed Value	$183,848,107,679
Property Tax In Lieu of VLF Revenues	$106,400,000
New ILVLF Revenues	**Project**
Assessed Value from New Development (a)	$879,876,675
Percentage Increase from Base	0.48%
New ILVLF Revenues	**$526,582**

Note:
(a) Does not include land values

Sources: San Diego County Auditor-Controller; City of San Diego FY 2014 Adopted Budget; BAE, 2013.

Sales Tax

Along with property taxes, sales tax revenues are typically one of the top two General Fund revenue sources for California cities. Sales tax revenues come from three sources: residents' taxable retail purchases, employees' taxable retail purchases, and business-to-business transactions involving taxable goods. Cities receive the vast majority of their sales tax revenue allocations for taxable sales that occur within their own jurisdiction, but they also receive a smaller portion of their sales tax revenue allocations from sales taxes that are pooled at the County level.

Under California law, cities are eligible to receive up to one percent of all taxable sales as sales tax revenues. According to the State Board of Equalization, the City of San Diego receives the entire one percent of taxable sales in the form of sales tax revenues.

Taxable Sales

In order to project sales tax revenues, it is necessary to estimate the taxable sales from new development. Taxable sales for potential development under the Project can either be calculated based on an average of taxable sales per commercial square foot, or using taxable sales estimates per resident and employee. Because not all retail sales are taxable in California[2] and it is not possible to know the types of commercial uses that will locate in new development,[3] this analysis uses taxable sales per resident and per employee to project new sales tax revenues associated with the Project.

Resident-Generated Sales Tax Revenues

In 2013, taxable retail sales in San Diego were approximately $13 billion.[4] This translates into approximately $9,800 per resident, excluding estimated taxable retail expenditures made by local employees and taxable non-retail expenditures. Because the City is relatively large and

[2] For example, groceries and pharmacy purchases, as well as services, are non-taxable.
[3] Including whether office users will generate business-to-business sales tax revenues or the amount they could generate.
[4] Based on 2011 State Board of Equalization data inflated to 2013 dollars using the Consumer Price Index.

has a sufficient variety of taxable retail goods available within its boundaries, the analysis assumes that the City would capture all retail sales expenditures from new residents and uses this per capita factor to project sales tax revenues that would accrue to the City from new residents under the Project.

Employment-Generated Sales Tax Revenues

In addition, local employment generates taxable sales through employee retail purchases and non-retail taxable sales. On average, employees can be expected to spend approximately $7.50 per day near their places of business. In addition, San Diego businesses registered approximately $5.5 billion on taxable non-retail (i.e., business-to-business) sales.[5] In total, local taxable sales associated with employees and businesses were equal to approximately $8,400 either directly (retail sales) or indirectly (non-retail sales). The analysis uses this per employee expenditure factor to project sales tax revenues that would accrue to the City from new employees under the Project.

Sales Tax Revenue Projections

As Table 6 on the following page shows, multiplying taxable sales per resident and employee by the number of new residents and employees, and applying the City's share of the one percent sales tax provides estimates for potential sales tax revenues. Under the Project, the City could anticipate approximately $785,000 in new annual sales tax revenues.

[5] Based on 2011 State Board of Equalization data inflated to 2013 dollars using the Consumer Price Index.

Table 6: Sales Tax Revenue Projections

(figures in parentheses indicate a decrease)

Assumptions	
Taxable Sales, Resident Generated	
Taxable Retail Sales, Residents (a), (b)	$13,027,195,232
Population	1,326,238
Taxable Retail Sales per Capita	$9,823
Taxable Sales, Employment Generated	
Taxable Retail Sales, Employees (c)	$1,571,032,500
Taxable Sales, Business to Business (Non-Retail Outlets) (b)	$5,458,071,614
Total Taxable Sales, Employment Generated	$7,029,104,114
Employment	837,884
Taxable Sales per Employee	$8,389
New Sales Tax Revenues	**Project**
New Residents	9,955
New Taxable Retail Sales	$97,784,461
New Employees	(2,296)
Total Taxable Sales, Employment Generated	($19,263,318)
SUBTOTAL: New Taxable Sales	$78,521,143
City's share of one percent sales tax (d)	1.00%
Total Sales Tax Revenues	**$785,211**

Notes:

(a) Equals total taxable retail sales, less the amount spent by employees.

(b) Based on 2011 taxable sales, increased to 2013 dollars using the Consumer Price Index.

(c) Based on average daily employee taxable sales expenditures of $7.50.

(d) Local jurisdictions are eligible to receive up to 1% of total taxable sales in sales tax revenues.

Sources: California State Board of Equalization, 2011; Bureau of Labor Statistics, 2013; BAE, 2013.

Business Taxes

The City receives business taxes from all businesses operating within its jurisdiction and rental unit business taxes from all residential rental unit owners.

Business Taxes

Currently the City charges business taxes based on the total number of employees per establishment. Businesses with 12 or fewer employees pay $35 per year, while those businesses with 13 or more employees pay $125 per year plus $5 per employee. Based on the proposed densities, types of development, and geographic location of the Project, the analysis assumes that one-third of all retail employees and one-half of the office workers would be employed at establishments with 12 or fewer employees. The remaining employees would work at establishments that have more than 12 employees.[6]

[6] Employment density assumptions used to project total employment are used for the total establishment projections.

Rental Unit Business Taxes

The City also charges a business tax on residential rental units based on the number of units available for rent, per parcel. Property owners with up to ten multifamily units available per parcel pay $50 per year plus $5 per rental unit. At the other end of the spectrum, owners of developments with more than 100 units per parcel pay $150 per year plus $8 per unit. Because all of the residential units in the Project would be multifamily, but would likely include for sale condominium units, the analysis assumes that 50 percent of all residential units would be available for rent and therefore, subject to the rental unit business tax.

Business Tax Revenue Projections

As Table 7 shows, from the Project, new commercial and rental residential development would generate approximately $4,000 in new annual business tax revenues.

Table 7: Business Tax Revenue Projections

(figures in parentheses indicate a decrease)

Assumptions	Base Annual Fee	Additional Fee per Unit / Employee
Business Taxes Schedule		
Businesses with 12 or fewer employees	$35	$0
Businesses with 13 or more employees	$125	$5
Rental Unit Business Tax Schedule, Multifamily Units		
2-10 Units	$50	$5
11-100 Units	$57	$9
101+ Units	$150	$8

Projected Revenues from New Development	Project
New Employees	(2,296)
New Employees in Firms of 12 or less (a)	(1,093)
New Firms with less than 12 employees	(92)
New Employees in Firms of 13 or more	(1,203)
New Firms with 13 or more employees	(80)
SUBTOTAL: New Business Taxes, Local Businesses	($19,234)
New Rental Units (b)	2,359
Number of Parcels	29
Average Number of Units per Parcel	84
SUBTOTAL: New Business Taxes, Rental Units	$23,224
Net New Business Tax Revenues	**$3,991**

Notes:

(a) Assumes 1/3 of retail establishments and 1/2 of office establishments have 12 or fewer employees.

(b) Assumed percentage of units available as for rent: 50%

Sources: City of San Diego FY 2014 Adopted Budget, 2013; ACS, 2012; BAE, 2013.

Licenses and Permits Fees

The City receives revenues from parking meters and alarm permit fees, as well as cost recovery revenues from regulating activities.[7] As the service population increases, these revenues would be expected to increase proportionately. In order to project these additional revenues, the fiscal model calculates the existing revenues on an average per service population basis. As Table 8 on the following page shows, in Fiscal Year 2014, the City estimates that its General Fund will receive approximately $17.4 million in License and Permit revenues, or $10 per service population. Applying this average revenue factor to the new service population shows that from the Project, the City could receive $88,000 in new annual License and Permit revenues.

Table 8: Licenses and Permits Revenue Projections

(figures in parentheses indicate a decrease)

Assumptions	**2014 Budget**
Parking Meters	$8,369,891
Other Licenses and Permits	$9,058,743
Total Licenses and Permits, Excluding Business Taxes	$17,428,634
Service Population, 2013	1,745,180
General Fund Revenues per Service Population	$9.99
Projected Revenues from New Development	**Project**
New Residents	9,955
New Employees	(2,296)
New Service Population (a)	8,807
Net New Licenses and Permits Revenues	**$87,952**

Note:
(a) Service population equals the resident population plus one-half the employment population.

Sources: California State Department of Finance, 2013; City of San Diego FY 2014 Adopted Budget, 2013; ACS, 2012; BAE, 2013.

Franchise Fees

The City receives Franchise Fee revenues from SDG&E, cable companies, and private refuse haulers, based on their gross receipts.[8] As the service population increases, demand for electricity, cable services, and refuse hauling would also increase proportionately, which would increase the providers' gross receipts. In order to project these additional revenues, the fiscal model calculates the existing revenues on an average per service population basis. As Table 9 on the following page shows, in Fiscal Year 2014, the City estimates that its General Fund will receive approximately $68.4 million in Franchise Fee revenues, or $39.19 per service population. Applying this average revenue factor to the new service population shows that from the Project, the City could receive $345,000 in new annual Franchise Fee revenues.

[7] City of San Diego Fiscal Year 2014 Adopted Budget, page 105.
[8] City of San Diego Fiscal Year 2014 Adopted Budget, page 104. By State law, telephone companies do not pay franchise fees.

Table 9: Franchise Fee Revenue Projections

(figures in parentheses indicate a decrease)

Assumptions	2014 Budget
General Fund Budget	$68,400,000
Service Population, 2013	1,745,180
General Fund Revenues per Service Population	$39.19

Projected Revenues from New Development	Project
New Residents	9,955
New Employees	(2,296)
New Service Population (a)	8,807
Net New Franchise Fee Revenues	**$345,173**

Note:

(a) Service population equals the resident population plus one-half the employment population.

Sources: California State Department of Finance, 2013; City of San Diego FY 2014 Adopted Budget, 2013; ACS, 2012; BAE, 2013.

Fines, Forfeitures, and Penalties

According to the City's Fiscal Year 2014 budget, Fines, Forfeitures, and Penalties revenues come from the violation of laws or regulations in the form of parking and other vehicle related violations, negligent impounds, collection referrals, and litigation awards.[9] As the service population increases, these revenues would also likely increase proportionately. In order to project these additional revenues, the fiscal model calculates the existing revenues on an average per service population basis. As Table 10 on the following page shows, in Fiscal Year 2014, the City estimates that its General Fund will receive approximately $29.3 million in Fines, Forfeitures, and Penalties revenues, or $16.79 per service population. Applying this average revenue factor to the new service population shows that from the Project, the City could receive $148,000 in Fines, Forfeitures, and Penalties revenues.

[9] City of San Diego Fiscal Year 2014 Adopted Budget, page 106.

Table 10: Fines, Forfeitures, and Penalties Revenue Projections

(figures in parentheses indicate a decrease)

Assumptions	2014 Budget
General Fund Budget	$29,300,000
Service Population, 2013	1,745,180
General Fund Revenues per Service Population	$16.79

Projected Revenues from New Development	Project
New Residents	9,955
New Employees	(2,296)
New Service Population (a)	8,807
Net New Franchise Fee Revenues	**$147,859**

Note:
(a) Service population equals the resident population plus one-half the employment population.

Sources: California State Department of Finance, 2013; City of San Diego FY 2014 Adopted Budget, 2013; ACS, 2012; BAE, 2013.

Projected General Fund Costs

This fiscal impact analysis utilizes average cost multipliers derived from the City of San Diego's current budget to project increased General Fund costs for public services as a result of buildout of the Project. All cost projections are for the point in time that development would reach buildout, but are expressed in terms of 2013 dollars.

The analysis uses net General Fund average service population cost factors to project the costs associated with providing increased municipal services to new development. The net General Fund cost for each function is the total expenditures for the function, less any program revenues or transfers of funds in from other sources (e.g., user fees/charges for services, state grants, reimbursements, etc.). The net General Fund cost thus provides an indicator of the City's costs for the different services which must be funded using the revenues from the general discretionary sources projected in the Revenues section of this report.

This analysis excludes those departments whose costs are not expected to be affected by new development (e.g., debt management, department of information technology). Although these departments are funded through the General Fund, they would not experience increased costs to serve new development, either directly because of new resident and employee demands for municipal services, or indirectly because they provide services to other City departments and would need to increase as the City hires additional staff. The City's Finance Department's staff provided information on which departments would not be expected to expand as a result of new development.

Current Net General Fund Costs for Services

The following subsections provide brief explanations of the calculations of net General Fund variable service costs for each function. The General Fund service cost for each function, net of other function-specific revenues, provide the basis to calculate a current City cost per service population. The resulting cost figure is then used to project increased City costs associated with new development that can be expected at buildout based on the development potential identified in the Project.

Police Costs

Police represents the largest annual expense category in the City budget. According to the City's Fiscal Year 2014 budget, there are approximately 1.48 sworn officers per 1,000 population,[10] which translates into net General Fund expenditures of $202.6 million or $116.08 per service population at current service levels. Assuming that service levels remain constant and all Police costs, excluding debt, would increase with new development, the City could anticipate increased Police costs of $1.02 million per year from the Project. Table 11 on the next page shows the projected Police costs from the Project.

[10] City of San Diego Fiscal Year 2014 Adopted Budget, page 444.

Table 11: Police Cost Projections

Assumptions	2014 Budget
Administration	$7,233,063
Administrative Services	$12,026,844
Centralized Investigations	$617,058
Family Justice Center	$169,122,582
Neighborhood Policing	$7,272,716
Patrol Operations	$19,182,799
Logistics	$5,222,757
Less: Other Sources of Revenue (a)	($18,101,951)
Net Charges to General Fund	$202,575,868
Service Population, 2013	1,745,180
General Fund Costs per Service Population	$116.08

Projected Costs from New Development	Project
New Residents	9,955
New Employees	(2,296)
New Service Population (b)	8,807
Net General Fund Costs	**$1,022,278**

Notes:

(a) Other sources of revenue include money that would not increase and comes from outside of the General Fund.

Charges for Service	$10,862,285
Revenue from Federal Agencies	$2,756,720
Revenue from Money and Property	$216,149
Revenue from Other Agencies	$758,423
Transfers In	$3,508,374

(b) Service population equals the resident population plus one-half the employment population

Sources: California State Department of Finance, 2013; City of San Diego FY 2014 Adopted Budget, 2013; ACS, 2012; BAE, 2013.

Fire-Rescue Costs

The City's Fire-Rescue department provides fire suppression, emergency medical treatment and transport, technical rescue, hazardous materials response, fire investigation, explosives disarmament, fire safety inspection and education programs, equipment and facilities maintenance, boating enforcement and rescue, beach safety and swimmer rescue, and the operation of two 911 communications centers to the City of San Diego and its inhabitants.[11] According to the City's Fiscal Year 2014 budget, there are approximately 0.63 sworn firefighters and 0.11 lifeguards per 1,000 population, which translates into net General Fund expenditures of $200 million or $114.71 per service population at current service levels.

According to the Department's Assistant Fire Chief, Station 25 would primarily serve the Study area, until such time as the Community Plan area reaches a threshold that warrants the development of a new station, which would be located at I-5 and Balboa Avenue, north of the Study area. Although the Study area development levels presented in this analysis would not push the area over that threshold, the Department is concerned about the impact of new development on response times, and indicated that the City would need to hire additional staff to maintain existing service levels.

[11] City of San Diego Fiscal Year 2014 Adopted Budget, page 261.

Even without new development, the Department has a goal of increasing its service standards from existing levels, which would require additional firefighters. An increase in standards would require a study that would need to be completed and adopted by the City Council. Since this is a currently a preliminary goal and has not yet been adopted by the City Council, this analysis projects Fire-Rescue costs based on existing service levels.

Assuming that response times remain at their current levels, and all Fire-Rescue costs excluding debt would increase with new development, the City could anticipate increased Fire-Rescue costs of $1.01 million per year from the Project. Table 12 shows the projected Fire-Rescue costs under the Project.

Table 12: Fire-Rescue Cost Projections

Assumptions	2014 Budget
Administrative Operations	$7,233,063
Communications	$12,026,844
Emergency Medical Services - Fire	$617,058
Emergency Operations	$169,122,582
Fire Prevention	$7,272,716
Lifeguard Services	$19,182,799
Logistics	$5,222,757
Special Operations	$2,001,487
Less: Other Sources of Revenue (a)	($22,498,106)
Net Charges to General Fund	$200,181,200
Service Population, 2013	1,745,180
General Fund Costs per Service Population	$114.71

Projected Costs from New Development	Project
New Residents	9,955
New Employees	(2,296)
New Service Population (b)	8,807
Net General Fund Costs	**$1,010,193**

Notes:

(a) Other sources of revenue include money that would not increase and comes from outside of the General Fund.

Charges for Service	$18,635,703
Revenue from Federal Agencies	$218,000
Revenue from Money and Property	$0
Revenue from Other Agencies	$136,029
Transfers In	$3,508,374

(b) Service population equals the resident population plus one-half the employment population

Sources: California State Department of Finance, 2013; City of San Diego FY 2014 Adopted Budget, 2013; ACS, 2012; BAE, 2013.

General Government

General Government includes those departments that provide City administrative functions. City Department of Finance staff were interviewed to determine which departments would need to expand as a result of new development. While the City Council would likely need to devote resources to reviewing projects within the Study area, the City Comptroller's Office would not be impacted. Per City staff, the following legislative and administrative departments

would likely be impacted either directly by the new development, or indirectly as they serve other municipal departments:[12]

- City Attorney
- City Council
- City Treasurer
- Citywide Program Expenditures
- Office of the Mayor
- Personnel
- Purchasing and Contracting

According to the City's Fiscal Year 2014 budget, the City anticipates 2014 net General Fund expenditures of $92.8 million or $53.16 per capita on General Government functions that would be impacted by new development. As Table 13 shows, applying this average cost factor to the new resident population indicates that from the Project, the City could spend an additional $468,000 per year on General Government services.

Table 13: General Government Cost Projections

Assumptions	2014 Budget
City Attorney	$45,689,443
City Council	$13,029,699
City Treasurer	$20,495,483
Citywide Program Expenditures (a)	$3,823,343
Office of the Mayor	$3,671,233
Personnel	$7,012,193
Purchasing and Contracting	$4,804,683
SUBTOTAL: General Government (b)	$98,526,077
Less: Other Sources of Revenue (c)	($5,744,561)
Net General Government Charges to General Fund	$92,781,516
Service Population, 2013	1,745,180
General Fund Costs per Service Population	$53.16
Projected Costs from New Development	**Project**
New Residents	9,955
New Employees	(2,296)
New Service Population (d)	8,807
Net General Fund Costs	**$468,212**

Notes:

(a) Only includes cost related to property tax administration.

(b) Includes those aspects of City administrative functions expected to increase with new development or service population.

(c) Other sources of revenue include money that would not increase and comes from outside of the General Fund.

Charges for Service	$5,380,184
Revenue from Money and Property	$0
Revenue from Other Agencies	$364,377
Transfers In	$0

(d) Service population equals the resident population plus one-half the employment population

Sources: California State Department of Finance, 2013; City of San Diego FY 2014 Adopted Budget, 2013; ACS, 2012; BAE, 2013.

[12] For example, the Personnel department would need to expand to serve the additional police, fire, and other service providers hired due to increased demand for those departments' services.

Park and Recreation

The Park and Recreation department operates and maintains the City's 41,000 acres of park, open space, and aquatic areas, as well as oversees and maintains recreation facilities and programs.[13] Although residents and workers are eligible to use the City's park and recreation resources, residents use local park and recreation services at a much higher rate than employees. Therefore, this analysis projects park and recreation costs from new development on a per capita basis, rather than per service population.

According to the City's Fiscal Year 2014 budget, the City anticipates 2014 net General Fund expenditures of $57.8 million or $43.59 per capita. As Table 14 shows, applying this average cost factor to the new resident population indicates that from the Project, the City could spend an additional $434,000 per year on Park and Recreation services.

Table 14: Park and Recreation Cost Projections

Assumptions	**2014 Budget**
Administrative Services	$2,637,403
Community Parks I	$21,211,451
Community Parks II	$21,189,110
Developed Regional Parks	$35,117,576
Open Space	$9,812,440
Less: Other Sources of Revenue (a)	($32,158,956)
Net Charges to General Fund	$57,809,024
Resident Population, 2013 (b)	1,326,238
General Fund Costs per Service Population	$43.59
Projected Costs from New Development	**Project**
New Residents	9,955
Net General Fund Costs	**$433,925**

Notes:

(a) Other sources of revenue include money that would not increase and comes from outside of the General Fund.

Charges for Service	$30,990,656
Revenue from Money and Property	$465,300
Transfers In	$703,000

(b) Based on resident population to reflect that local parks primarily serve the resident population.

Sources: California State Department of Finance, 2013; City of San Diego FY 2014 Adopted Budget, 2013; ACS, 2012; BAE, 2013.

Transportation and Storm Water

The Transportation and Storm Water department "provides operating and maintenance services for streets, sidewalks, and storm drains; leads efforts to protect and improve the water quality of rivers, creeks, bays, and the ocean; performs traffic and transportation system engineering; manages the Utilities Undergrounding Program; and plans and coordinates work in the public right-of-way"[14] in San Diego. Although development in the Study area would be infill, new residents and employees using the existing transportation network and future transit

[13] City of San Diego Fiscal Year 2014 Adopted Budget, page 399.
[14] City of San Diego Fiscal Year 2014 Adopted Budget, page 651.

would add to the existing user base, thereby increasing demand for maintenance. Thus, this analysis assumes that new development would proportionately increase demand for transportation and storm water services.

According to the City's Fiscal Year 2014 budget, the City anticipates 2014 net General Fund expenditures of $77.2 million or $44.25 per service population. As Table 15 shows, applying this average cost factor to the new service population indicates that from the Project, the City could spend an additional $390,000 per year on Transportation and Storm Water services.

Table 15: Transportation and Storm Water Cost Projections

Assumptions	2014 Budget
Admin and Right-of-Way Coordination	$1,398,151
Storm Water	$35,100,865
Street	$44,519,889
Transportation Engineering Operations	$11,093,564
Less: Other Sources of Revenue (a)	($14,887,941)
Net Charges to General Fund	$77,224,528
Service Population, 2013	1,745,180
General Fund Costs per Service Population	$44.25
Projected Costs from New Development	**Project**
New Residents	9,955
New Employees	(2,296)
New Service Population (b)	8,807
Net General Fund Costs	**$389,705**

Notes:

(a) Other sources of revenue include money that would not increase and comes from outside of the General Fund.

Charges for Service	$11,322,284
Revenue from Money and Property	$57,283
Revenue from Other Agencies	$0
Transfers In	$3,508,374

(b) Service population equals the resident population plus one-half the employment population

Sources: California State Department of Finance, 2013; City of San Diego FY 2014 Adopted Budget, 2013; ACS, 2012; BAE, 2013.

Library

The City of San Diego's Library System includes a Central Library, 35 branch libraries, and an adult literacy program.[15] The Clairemont Branch Library located at 2920 Burgener Boulevard would primarily serve new development in the Study area. Although the library serves both residents and workers, residents use local library services at a much higher rate than employees. Therefore, this analysis projects library costs from new development on a per capita basis.

According to the City's Fiscal Year 2014 budget, the City anticipates 2014 net General Fund expenditures of $41.8 million or $31.50 per capita. As Table 16 on the following page shows,

[15] City of San Diego Fiscal Year 2014 Adopted Budget, page 305.

applying this average cost factor to the new resident population indicates that from the Project, the City could spend an additional $314,000 per year on Library services.

Table 16: Library Cost Projections

Assumptions	2014 Budget
Branch Libraries	$20,557,812
Central Library	$19,976,934
Library Administration	$3,277,171
Less: Other Sources of Revenue (a)	($2,033,500)
Net Charges to General Fund	$41,778,417
Resident Population, 2013 (b)	1,326,238
General Fund Costs per Service Population	$31.50
Projected Costs from New Development	**Project**
New Residents	9,955
Net General Fund Costs	**$313,596**

Notes:

(a) Other sources of revenue include money that would not increase and comes from outside of the General Fund.

Charges for Service	$1,395,500
Revenue from Money and Property	$638,000
Transfers In	$0

(b) Based on resident population to reflect that libraries primarily serve the resident population.

Sources: California State Department of Finance, 2013; City of San Diego FY 2014 Adopted Budget, 2013; ACS, 2012; BAE, 2013.

Environmental Services

The Environmental Services department provides refuse collection, as well as energy and waste conservation education and programming in San Diego. Its four divisions include: Collection Services; Energy, Sustainability, and Environmental Protection; Waste Reduction and Disposal; and the Office of the Director.[16] According to the City's Fiscal Year 2014 budget, the City anticipates 2014 net General Fund expenditures of $35.2 million or $20.19 per service population. As Table 17 on the following page shows, applying this average cost factor to the new service population indicates that from the Project, the City could spend an additional $178,000 per year on Environmental Services.

[16] City of San Diego Fiscal Year 2014 Adopted Budget, page 219.

Table 17: Environmental Services Cost Projections

Assumptions	2014 Budget
Collection Services	$32,257,985
Energy Sustainability and Environmental Protection	$2,147,205
Office of the Director	$1,764,655
Less: Charges for Services	($939,829)
Net Charges to General Fund	$35,230,016
Service Population, 2013	1,745,180
General Fund Costs per Service Population	$20.19

Projected Costs from New Development	Project
New Residents	9,955
New Employees	(2,296)
New Service Population (a)	8,807
Net General Fund Costs	**$177,785**

Note:
(a) Service population equals the resident population plus one-half the employment population

Sources: California State Department of Finance, 2013; City of San Diego FY 2014 Adopted Budget, 2013; ACS, 2012; BAE, 2013.

Public Works

The City's Public Works department provides a range of services for the City including contracting and procurement, overseeing engineering and capital projects, and providing general services. The contracting group provides procurement services for Capital Improvements Programs contractors and consultants.[17] The Engineering and Capital Projects group works on "various public infrastructure assets to rehabilitate, restore, improve, and add to the City's capital facilities,"[18] while the General Services group provides basic maintenance, repair, and publishing services to other City departments.[19]

According to the City's Fiscal Year 2014 budget, the City anticipates 2014 net General Fund expenditures of $18.4 million or $10.53 per service population. As Table 18 on the following page shows, applying this average cost factor to the new service population indicates that from the Project, the City could spend an additional $93,000 per year on Public Works.

[17] City of San Diego Fiscal Year 2014 Adopted Budget, page 515.
[18] City of San Diego Fiscal Year 2014 Adopted Budget, page 523.
[19] City of San Diego Fiscal Year 2014 Adopted Budget, page 535.

Table 18: Public Works Cost Projections

Assumptions	2014 Budget
Public Works - Contracting	$2,107,234
Public Works - Engineering and Capital Projects	
Architectural Engineering and Parks	$7,886,898
Business and Support Services	$339,196
Field Engineering	$19,812,714
Project Implementation	$18,135,326
Public Works - Contracting	$0
Right-of-Way Design	$15,733,129
Public Works - General Services	
Administration	$151,280
Facilities	$15,678,795
Less: Charges for Service	($61,462,332)
Net Charges to General Fund	$18,382,240
Service Population, 2013	1,745,180
General Fund Costs per Service Population	$10.53
Projected Costs from New Development	**Project**
New Residents	9,955
New Employees	(2,296)
New Service Population (a)	8,807
Net General Fund Costs	**$92,764**

Note:
(a) Service population equals the resident population plus one-half the employment population

Sources: California State Department of Finance, 2013; City of San Diego FY 2014 Adopted Budget, 2013; ACS, 2012; BAE, 2013.

All Other Departments

This section provides a combined cost projection for the following five departments that individually have much smaller new service costs than the other General Fund departments: Development Services; Economic Development; Public Utilities; Civic and Urban Initiatives; and Office of Homeland Security. Each department's net General Fund Costs represented no more than 2 percent of overall net new general fund costs from the Project. The projected new service costs are described below and summarized in Table 19 at the end of this section.

Development Services

The City's Development Services department provides "Entitlements, Building Construction and Safety, Current and Long Range Planning, Facilities Financing, and Neighborhood Code Enforcement" services to the City of San Diego and its inhabitants.[20] According to the City's Fiscal Year 2014 budget, the City anticipates 2014 net General Fund expenditures of $14.1 million or $8.06 per service population. Applying this average cost factor to the new service population indicates that from the Project, the City could spend an additional $71,000 per year on Development Services.

[20] City of San Diego Fiscal Year 2014 Adopted Budget, page 179.

Economic Development Costs
The Economic Development department provides a variety of services to the City that are focused around improving quality of life, growing the local economy and tax base, and creating new opportunities for San Diego residents. The Department is organized into two main sections: Community Development and Economic Growth Services. The Community Development group oversees small business programs and administers HUD grants, while the Economic Growth Services section is responsible for working with businesses on the regulatory landscape; unwinding the former Redevelopment Agency via the Successor Agency and Civic San Diego; administering federal Economic Development Administration grants; and attracting new businesses to the region, particularly those in expanding industry clusters and emerging markets.[21]

According to the City's Fiscal Year 2014 budget, the City anticipates 2014 net General Fund expenditures of $8.8 million or $5.01 per service population. Applying this average cost factor to the new service population indicates that from the Project, the City could spend an additional $44,000 per year on Economic Development services.

Public Utilities
The Public Utilities department provides services related to water, wastewater, and recycled water to the City of San Diego. Although Enterprise, Sewer, and other non-General Fund sources provide the majority of funding for this department, the City does anticipate spending approximately $1.0 million in net General Fund expenditures, or $0.59 per service population on Public Utilities, primarily for contracts that this analysis assumes will continue in the future. Applying this average cost factor to the new service population indicates that from the Project, the City could spend an additional $5,200 per year on Public Utilities.

Civic and Urban Initiatives Costs
The Civic and Urban Initiatives Program, or "incubator for Civic Imagination," is a new department/program dedicated to improving the local quality of life through innovative approaches to community participation, as well as urban thinking and implementation.[22] In Fiscal Year 2014, the City anticipates spending approximately $946,000 out of the General Fund or $0.54 per service population. Applying this average cost factor to the new service population indicates that from the Project, the City could spend an additional $4,800 per year on Civic and Urban Initiatives.

Office of Homeland Security
The Office of Homeland Security's mission is to "mitigate, prepare for, respond to, and recover from natural and mad-made disasters."[23] This includes training City staff and the general population, as well as putting in place emergency response protocols and integrating the City's emergency plans with County, State, Federal jurisdictions' plans. Because this department is responsible for working with City staff and the general public, its costs are expected to increase as new development generates additional service population and demand for other City services (e.g., Police, Fire-Rescue).

---

[21] City of San Diego Fiscal Year 2014 Adopted Budget, page 207.
[22] City of San Diego Fiscal Year 2014 Adopted Budget, page 119.
[23] City of San Diego Fiscal Year 2014 Adopted Budget, page 350.

According to the City's Fiscal Year 2014 budget, the City anticipates 2014 net General Fund expenditures of $804,200 or $0.46 per service population. Applying this average cost factor to the new service population indicates that from the Project, the City could spend an additional $4,100 on the Office of Homeland Security.

Table 19 summarizes the new fiscal service costs for the above five General Fund departments. Collectively, the new service costs associated with the Project would result in additional costs of $129,000 per year.

Table 19: All Other Departments Cost Projections

Assumptions	2014 Budget
Development Services	
Admin & Support; City Planning; Code Compliance	$15,048,760
Less Charges for Services	($980,216)
Net Charges to General Fund	$14,068,544
Economic Development	
ED; Econ. Growth; HUD Programs; Small Business & Neigh'ds	$12,944,622
Less Charges for Services	($4,192,638)
Net Charges to General Fund	$8,751,984
Public Utilities	
Water	$1,969,446
Less Charges for Services	($940,000)
Net Charges to General Fund	$1,029,446
Civic and Urban Initiatives	
Civic and Urban Initiatives	$945,987
Less Charges for Services	$0
Net Charges to General Fund	$945,987
Office of Homeland Security	
Office of Homeland Security	$1,735,205
Less Charges for Services	($930,957)
Net Charges to General Fund	$804,248
All Other Depts. Net Charges to General Fund	**$25,600,209**
Service Population, 2013	1,745,180
General Fund Costs per Service Population	$14.67
Projected Costs from New Development	**Project**
New Residents	9,955
New Employees	(2,296)
New Service Population (a)	8,807
Net General Fund Costs	**$129,189**

Note:
(a) Service population equals the resident population plus one-half the employment population

Sources: California State Department of Finance, 2013; City of San Diego FY 2014 Adopted Budget, 2013; ACS, 2012; BAE, 2013.

Projected Net Fiscal Impacts

Table 20 on the following page summarizes on a line-item basis the fiscal impact analysis results for the Project. As shown in the table, the fiscal impact model projects that at buildout the Study area would generate $3.8 million in new annual General Fund revenues, versus $4 million in new annual General Fund expenditures, resulting in a net annual fiscal impact (deficit) of slightly more than $200,000 per year. Relative to the City's annual General Fund budget of approximately $1.2 billion, this represents a 0.02 percent increase in the deficit. This difference is within the range of what could be expected as normal annual variation in either General Fund revenues or expenditures.

The projected slight fiscal deficits can be attributed to several factors including:

- Use of an average cost approach to forecasting new police and fire-rescue expenditures that may somewhat overstate these expenditures. This method was used due to these department's being unable to provide marginal cost information (often, within a given area existing police and fire-rescue services are able to service some level of new development with no significant increase in costs);
- Comprehensive inclusion of all City services that might be potentially increase additional costs in conjunction with new development, even though the actual rate of use may vary (for example, new Millennial households may use Library services less than the Citywide average);
- Relatively expensive administrative costs compared to similarly sized cities; and
- A development program that adds substantial new residential units, while decreasing commercial uses. Residential uses tend to be relatively higher consumers of public services, compared to commercial uses.

For the Project, the vast majority of projected cost increases are associated with the need to expand the City's Police and Fire-Rescue departments as the City grows. Among all the General Fund budget groups analyzed, Police currently accounts for the largest share of expenditures, followed by Fire-Rescue. The nature of these services are such that the City collects relatively little in the way of offsetting revenues; thus, these services are most dependent upon support from the General Fund's general purpose revenues, such as property tax, sales tax, and sales tax in-lieu of vehicle license fees.

Even though residential users tend to be greater consumers of public services than commercial services, the increase in residential uses within the Study area can create other non-fiscal benefits for the City. Transit-oriented development with a mix of uses, including residential, activates space for longer periods than purely commercial space, can attract new retail uses and services for existing residents, and enhances both the quality of life and public safety. TOD contributes to increased transit ridership, and reduces vehicle miles traveled, which can create significant benefits by accommodating future growth without a commensurate increase in traffic congestion, thereby creating mobility, air quality, and other benefits. Any full consideration of Project benefits and costs should include fiscal as well as non-fiscal items.

Table 20: Net Fiscal Impact

Net New Revenues	Project
Property Tax	$1,824,805
Property Transfer Taxes	$86,889
ILVLF	$526,582
Sales Tax	$785,211
Business Taxes	$3,991
Other Licenses and Permits	$87,952
Franchise Fees	$345,173
Fines, Forfeitures, and Penalties	$147,859
Total Net New Revenues	**$3,808,462**
Net New Costs	
Police	$1,022,278
Fire	$1,010,193
General Government	$468,212
Park and Recreation	$433,925
Transportation and Storm Water	$389,705
Library	$313,596
Environmental Services	$177,785
Public Works	$92,764
Development Services	$70,995
Economic Development	$44,166
Public Utilities	$5,195
Civic and Urban Initiatives	$4,774
Office of Homeland Security	$4,059
Total Net New Costs	**$4,037,647**
Net Fiscal Surplus / (Deficit)	**($229,185)**

Source: BAE, 2013.