California
Manual on Uniform Traffic Control Devices
for Streets and Highways
**(FHWA's MUTCD 2003 Edition,
as amended for use in California)**

PART 4
Highway Traffic Signals

STATE OF CALIFORNIA
BUSINESS, TRANSPORTATION AND HOUSING AGENCY
DEPARTMENT OF TRANSPORTATION

(This page left intentionally blank)

PART 4. HIGHWAY TRAFFIC SIGNALS

TABLE OF CONTENTS

		Page
CHAPTER 4A.	**GENERAL**	
Section 4A.01	Types	4A-1
Section 4A.02	Definitions Relating to Highway Traffic Signals	4A-1
CHAPTER 4B.	**TRAFFIC CONTROL SIGNALS - GENERAL**	
Section 4B.01	General	4B-1
Section 4B.02	Basis of Installation or Removal of Traffic Control Signals	4B-1
Section 4B.03	Advantages and Disadvantages of Traffic Control Signals	4B-1
Section 4B.04	Alternatives to Traffic Control Signals	4B-2
Section 4B.05	Adequate Roadway Capacity	4B-2
Section 4B.101(CA)	Traffic Signal Development Procedures – Introduction	4B-3
Section 4B.102(CA)	Project Report	4B-3
Section 4B.103(CA)	Submittals	4B-4
Section 4B.104(CA)	Financing	4B-4
Section 4B.105(CA)	Design Cost	4B-4
Section 4B.106(CA)	Construction Costs – Conventional Highways	4B-5
Section 4B.107(CA)	Construction Costs – Freeways	4B-6
Section 4B.108(CA)	Roadway Improvements by Local Agencies	4B-7
Section 4B.109(CA)	Cooperative Agreements	4B-7
Section 4B.110(CA)	Engineering Services for Local Agencies	4B-7
Section 4B.111(CA)	Salvaged Electrical Equipment	4B-7
Section 4B.112(CA)	Encroachment Permits	4B-8
Section 4B.113(CA)	Modifications of Existing Signals	4B-8
Section 4B.114(CA)	Signals on Poles Owned by Others	4B-9
CHAPTER 4C.	**TRAFFIC CONTROL SIGNAL NEEDS STUDIES**	
Section 4C.01	Studies and Factors for Justifying Traffic Control Signals	4C-1
Section 4C.02	Warrant 1, Eight-Hour Vehicular Volume	4C-3
Section 4C.03	Warrant 2, Four-Hour Vehicular Volume	4C-4
Section 4C.04	Warrant 3, Peak Hour	4C-4
Section 4C.05	Warrant 4, Pedestrian Volume	4C-5
Section 4C.06	Warrant 5, School Crossing	4C-5
Section 4C.07	Warrant 6, Coordinated Signal System	4C-6
Section 4C.08	Warrant 7, Crash Experience	4C-6
Section 4C.09	Warrant 8, Roadway Network	4C-7
Section 4C.101(CA)	Criterion for School Crossing Traffic Signals	4C-7
Section 4C.102(CA)	Bicycle Signal Warrant	4C-7
CHAPTER 4D.	**TRAFFIC CONTROL SIGNAL FEATURES**	
Section 4D.01	General	4D-1

		Page
Section 4D.02	Responsibility For Operation and Maintenance	4D-1
Section 4D.03	Provisions for Pedestrians	4D-2
Section 4D.04	Meaning of Vehicular Signal Indications	4D-2
Section 4D.05	Application of Steady Signal Indications	4D-4
Section 4D.06	Application of Steady Signal Indications For Left Turns	4D-6
Section 4D.07	Application of Steady Signal Indications For Right Turns	4D-9
Section 4D.08	Prohibited Steady Signal Indications	4D-10
Section 4D.09	Unexpected Conflicts during Green or Yellow Intervals	4D-10
Section 4D.10	Yellow Change and Red Clearance Intervals	4D-11
Section 4D.11	Application of Flashing Signal Indications	4D-11
Section 4D.12	Flashing Operation of Traffic Control Signals	4D-12
Section 4D.13	Preemption and Priority Control of Traffic Control Signals	4D-13
Section 4D.14	Coordination of Traffic Control Signals	4D-17
Section 4D.15	Size, Number, and Location of Signal Faces by Approach	4D-17
Section 4D.16	Number and Arrangement of Signal Sections in Vehicular Traffic Control Signal Faces	4D-20
Section 4D.17	Visibility, Shielding, and Positioning of Signal Faces	4D-21
Section 4D.18	Design, Illumination, and Color of Signal Sections	4D-22
Section 4D.19	Lateral Placement of Signal Supports and Cabinets	4D-23
Section 4D.20	Temporary Traffic Control Signals	4D-24
Section 4D.21	Traffic Signal Signs, Auxiliary	4D-25
Section 4D.101(CA)	Traffic Signal Design Introduction	4D-25
Section 4D.102(CA)	Signal Plan Schedules	4D-25
Section 4D.103(CA)	Vehicle Detectors	4D-26
Section 4D.104(CA)	Bicycle Signals	4D-26
Section 4D.105(CA)	Bicycle Detectors	4D-27
Section 4D.106(CA)	Selection of Traffic Signal Operation	4D-27
Section 4D.107(CA)	Selection of Left-Turn Phasing	4D-27
Section 4D.108(CA)	Simultaneous or Dual-Left	4D-27
Section 4D.109(CA)	Lead-Lag	4D-28
Section 4D.110(CA)	Opposite or Opposing	4D-28
Section 4D.111(CA)	Permissive Left-Turn Phasing	4D-28
Section 4D.112(CA)	Signals at Interchanges	4D-28
Section 4D.113(CA)	Timing of Green Intervals	4D-29
Section 4D.114(CA)	Review of Traffic Signal Operations	4D-29

CHAPTER 4E. PEDESTRIAN CONTROL FEATURES

Section 4E.01	Pedestrian Signal Heads	4E-1
Section 4E.02	Meaning of Pedestrian Signal Head Indications	4E-1
Section 4E.03	Application of Pedestrian Signal Heads	4E-1
Section 4E.04	Size, Design, and Illumination of Pedestrian Signal Head Indications.	4E-2
Section 4E.05	Location and Height of Pedestrian Signal Heads	4E-2
Section 4E.06	Accessible Pedestrian Signals	4E-3
Section 4E.07	Countdown Pedestrian Signals	4E-5

		Page
Section 4E.08	Pedestrian Detectors	4E-6
Section 4E.09	Accessible Pedestrian Signal Detectors	4E-6
Section 4E.10	Pedestrian Intervals and Signal Phases	4E-7
Section 4E.101(CA)	Financing	4E-8
CHAPTER 4F.	**TRAFFIC CONTROL SIGNALS FOR EMERGENCY VEHICLE ACCESS**	
Section 4F.01	Applications of Emergency-Vehicle Traffic Control Signals	4F-1
Section 4F.02	Design of Emergency-Vehicle Traffic Control Signals	4F-1
Section 4F.03	Operation of Emergency-Vehicle Traffic Control Signals	4F-1
CHAPTER 4G.	**TRAFFIC CONTROL SIGNALS FOR ONE-LANE, TWO-WAY FACILITIES**	
Section 4G.01	Application of Traffic Control Signals for One-Lane, Two-Way Facilities	4G-1
Section 4G.02	Design of Traffic Control Signals for One-Lane, Two-Way Facilities	4G-1
Section 4G.03	Operation of Traffic Control Signals for One-Lane, Two-Way Facilities	4G-1
CHAPTER 4H.	**TRAFFIC CONTROL SIGNALS FOR FREEWAY ENTRANCE RAMPS**	
Section 4H.01	Application of Freeway Entrance Ramp Control Signals	4H-1
Section 4H.02	Design of Freeway Entrance Ramp Control Signals	4H-1
CHAPTER 4I.	**TRAFFIC CONTROL FOR MOVABLE BRIDGES**	
Section 4I.01	Application of Traffic Control for Movable Bridges	4I-1
Section 4I.02	Design and Location of Movable Bridge Signals and Gates	4I-1
Section 4I.03	Operation of Movable Bridge Signals and Gates	4I-2
CHAPTER 4J.	**LANE-USE CONTROL SIGNALS**	
Section 4J.01	Application of Lane-Use Control Signals	4J-1
Section 4J.02	Meaning of Lane-Use Control Signal Indications	4J-1
Section 4J.03	Design of Lane-Use Control Signals	4J-2
Section 4J.04	Operation of Lane-Use Control Signals	4J-3
CHAPTER 4K.	**FLASHING BEACONS**	
Section 4K.01	General Design and Operation of Flashing Beacons	4K-1
Section 4K.02	Intersection Control Beacon	4K-1
Section 4K.03	Warning Beacon	4K-2

		Page
Section 4K.04	Speed Limit Sign Beacon	4K-2
Section 4K.05	Stop Beacon	4K-3
Section 4K.101(CA)	Warning Beacon Financing	4K-3
Section 4K.102(CA)	Signal Ahead Flashing Beacons	4K-3
Section 4K.103(CA)	Flashing Beacons at School Crossings	4K-4
Section 4K.104(CA)	Speed Limit Sign Beacon	4K-4
Section 4K.105(CA)	Flashing Beacons for Fire Stations	4K-4
Section 4K.106(CA)	Stop Sign Flashing Beacons	4K-4
Section 4K.107(CA)	Flashing Beacons for Bus Stops on Freeway Interchanges	4K-5
CHAPTER 4L.	**IN-ROADWAY LIGHTS**	
Section 4L.01	Application of In-Roadway Lights	4L-1
Section 4L.02	In-Roadway Warning Lights at Crosswalks	4L-1
Section 4L.101(CA)	In-Roadway Warning Lights at Crosswalks Financing and Maintenance-State Highways	4L-2

FIGURES

CHAPTER 4C.	**TRAFFIC CONTROL SIGNAL NEEDS STUDIES**	
Figure 4C-1	Warrant 2, Four-Hour Vehicular Volume	4C-9
Figure 4C-2	Warrant 2, Four-Hour Vehicular Volume (70% Factor)	4C-9
Figure 4C-3	Warrant 3, Peak Hour	4C-10
Figure 4C-4	Warrant 3, Peak Hour (70% Factor)	4C-10
Figure 4C-101(CA)	Traffic Signal Warrants Worksheet	4C-11
Figure 4C-102(CA)	Traffic Count Worksheet	4C-15
Figure 4C-103(CA)	Traffic Signal Warrants Worksheet (Average Traffic Estimate Form)	4C-16
CHAPTER 4D.	**TRAFFIC CONTROL SIGNAL FEATURES**	
Figure 4D-1	Maximum Mounting Height of Signal Faces Located Between 12 Meters (4 Feet) and 16 Meters (53 Feet) from Stop Line	4D-30
Figure 4D-2	Horizontal Location of Signal Faces	4D-31
Figure 4D-3	Typical Arrangements of Signal Lenses in Signal Faces	4D-32
Figure 4D-3(CA)	Typical Arrangements of Signal Lenses in Signal Faces	4D-33
Figure 4D-101(CA)	Left-Turn Phasing Methods (Phase Diagrams)	4D-34
Figure 4D-102(CA)	Typical Signal Layout at Offset Intersections, Signalized and Marked as a Single Intersection	4D-35
Figure 4D-103(CA)	Typical Signal Layout (Two Phase Operation)	4D-39
Figure 4D-104(CA)	Typical Signal Layout (Three Phase Operation)	4D-40
Figure 4D-105(CA)	Typical Signal Layout (Five Phase "Dual Left" Operation)	4D-41
Figure 4D-106(CA)	Typical Signal Layout (Six Phase "Opposing" Operation)	4D-42
Figure 4D-107(CA)	Typical Signal Layout (Eight Phase "Quad Left" Operation)	4D-43
Figure 4D-108(CA)	Typical Traffic Signal Installation	4D-44

		Page
Figure 4D-109(CA)	Diamond Interchange Timing Chart (Heavy Left-Turn – 200 vphpl or More – Using Two Controllers)	4D-45
Figure 4D-110(CA)	Diamond Interchange Timing Chart (Light Left-Turn – 200 vphpl or Less – Using Two Controllers)	4D-46
Figure 4D-111(CA)	Bicycle Detection Systems	4D-47
CHAPTER 4E.	**PEDESTRIAN CONTROL FEATURES**	
Figure 4E-1	Typical Pedestrian Signal Indications	4E-9
Figure 4E-2	Recommended Pushbutton Locations for Accessible Pedestrian Signals	4E-10
CHAPTER 4J.	**LANE-USE CONTROL SIGNALS**	
Figure 4J-1	Left-Turn Lane-Use Control Signals	4J-4
CHAPTER 4K.	**FLASHING BEACONS**	
Figure 4K-101(CA)	Flashing Beacon at School Crossings Worksheet	4K-6
CHAPTER 4L.	**IN-ROADWAY LIGHTS**	
Figure 4L-101(CA)	Typical Layout For In Roadway Warning Lights (IRWL's)	4L-3

TABLES

CHAPTER 4C.	**TRAFFIC CONTROL SIGNAL NEEDS STUDIES**	
Table 4C-1	Warrant 1, Eight-Hour Vehicular Volume.	4C-17
CHAPTER 4D.	**TRAFFIC CONTROL SIGNAL FEATURES**	
Table 4D-1	Minimum Sight Distance	4D-48
Table 4D-101(CA)	Suggested Detector Setbacks from Limitline	4D-49
Table 4D-102(CA)	Minimum Yellow Light Change Interval	4D-50
Table 4D-103(CA)	Traffic Signal Timing Analysis Chart	4D-51
Table 4D-104(CA)	Signal Operations – Vehicular Speed	4D-52
Table 4D-105(CA)	Pole and Equipment Schedule	4D-54
Table 4D-106(CA)	Conductor and Conduit Schedule	4D-55
Table 4D-107(CA)	Available Conduit Area	4D-56
Table 4D-108(CA)	Conductor Size	4D-57

(This page left intentionally blank)

CHAPTER 4A. GENERAL

Section 4A.01 Types

Support:

The following types and uses of highway traffic signals are discussed in Part 4: traffic control signals; pedestrian signals; emergency-vehicle traffic control signals; traffic control signals for one-lane, two-way facilities; traffic control signals for freeway entrance ramps; traffic control signals for movable bridges; lane-use control signals; flashing beacons; and in-roadway lights.

Section 4A.02 Definitions Relating to Highway Traffic Signals

Standard:

The following technical terms, when used in Part 4, shall be defined as follows:

1. **Accessible Pedestrian Signal—a device that communicates information about pedestrian timing in nonvisual format such as audible tones, verbal messages, and/or vibrating surfaces.**
2. **Active Grade Crossing Warning System—the flashing-light signals, with or without warning gates, together with the necessary control equipment used to inform road users of the approach or presence of trains at highway-rail grade crossings or highway-light rail transit grade crossings.**
3. **Actuated Operation—a type of traffic control signal operation in which some or all signal phases are operated on the basis of actuation.**
4. **Actuation—initiation of a change in or extension of a traffic signal phase through the operation of any type of detector.**
5. **Approach—all lanes of traffic moving towards an intersection or a midblock location from one direction, including any adjacent parking lane(s).**
6. **Average Day—a day representing traffic volumes normally and repeatedly found at a location, typically a weekday when volumes are influenced by employment or a weekend day when volumes are influenced by entertainment or recreation.**
7. **Backplate—see Signal Backplate.**
8. **Beacon—a highway traffic signal with one or more signal sections that operates in a flashing mode.**
9. **Conflict Monitor—a device used to detect and respond to improper or conflicting signal indications and improper operating voltages in a traffic controller assembly.**
10. **Controller Assembly—a complete electrical device mounted in a cabinet for controlling the operation of a highway traffic signal.**
11. **Controller Unit—that part of a controller assembly that is devoted to the selection and timing of the display of signal indications.**
12. **Crosswalk—(a) that part of a roadway at an intersection included within the connections of the lateral lines of the sidewalks on opposite sides of the highway measured from the curbs or in the absence of curbs, from the edges of the traversable roadway, and in the absence of a sidewalk on one side of the roadway, the part of a roadway included within the extension of the lateral lines of the sidewalk at right angles to the centerline; (b) any portion of a roadway at an intersection or elsewhere distinctly indicated as a pedestrian crossing by lines on the surface, which may be supplemented by a contrasting pavement texture, style, or color.**
13. **Cycle Length—the time required for one complete sequence of signal indications.**
14. **Dark Mode—the lack of all signal indications at a signalized location. (The dark mode is most commonly associated with power failures, ramp meters, beacons, and some movable bridge signals.)**
15. **Detector—a device used for determining the presence or passage of vehicles or pedestrians.**
16. **Dual-Arrow Signal Section—a type of signal section designed to include both a yellow arrow and a green arrow.**
17. **Emergency Vehicle Traffic Control Signal—a special traffic control signal that assigns the right of-way to an authorized emergency vehicle.**

18. Flasher—a device used to turn highway traffic signal indications on and off at a repetitive rate of approximately once per second.
19. Flashing—an operation in which a highway traffic signal indication is turned on and off repetitively.
20. Flashing Mode—a mode of operation in which at least one traffic signal indication in each vehicular signal face of a highway traffic signal is turned on and off repetitively.
21. Full-Actuated Operation—a type of traffic control signal operation in which all signal phases function on the basis of actuation.
22. Highway Traffic Signal—a power-operated traffic control device by which traffic is warned or directed to take some specific action. These devices do not include signals at toll plazas, power-operated signs, illuminated pavement markers, warning lights (see Section 6F.78), or steady-burning electric lamps.
23. In-Roadway Lights—a special type of highway traffic signal installed in the roadway surface to warn road users that they are approaching a condition on or adjacent to the roadway that might not be readily apparent and might require the road users to slow down and/or come to a stop.
24. Intersection—(a) the area embraced within the prolongation or connection of the lateral curb lines, or if none, the lateral boundary lines of the roadways of two highways that join one another at, or approximately at, right angles, or the area within which vehicles traveling on different highways that join at any other angle might come into conflict; (b) the junction of an alley or driveway with a roadway or highway shall not constitute an intersection.
25. Intersection Control Beacon—a beacon used only at an intersection to control two or more directions of travel.
26. Interval—the part of a signal cycle during which signal indications do not change.
27. Interval Sequence—the order of appearance of signal indications during successive intervals of a signal cycle.
28. Lane-Use Control Signal—a signal face displaying signal indications to permit or prohibit the use of specific lanes of a roadway or to indicate the impending prohibition of such use.
29. Lens—see Signal Lens.
30. Louver—see Signal Louver.
31. Major Street—the street normally carrying the higher volume of vehicular traffic.
32. Malfunction Management Unit—same as Conflict Monitor.
33. Minor Street—the street normally carrying the lower volume of vehicular traffic.
34. Movable Bridge Resistance Gate—a type of traffic gate, which is located downstream of the movable bridge warning gate, that provides a physical deterrent to vehicle and/or pedestrian traffic when placed in the appropriate position.
35. Movable Bridge Signal—a highway traffic signal installed at a movable bridge to notify traffic to stop during periods when the roadway is closed to allow the bridge to open.
36. Movable Bridge Warning Gate—a type of traffic gate designed to warn, but not primarily to block, vehicle and/or pedestrian traffic when placed in the appropriate position.
37. Pedestrian Change Interval—an interval during which the flashing UPRAISED HAND (symbolizing DONT WALK) signal indication is displayed. When a verbal message is provided at an accessible pedestrian signal, the verbal message is "wait."
38. Pedestrian Clearance Time—the time provided for a pedestrian crossing in a crosswalk, after leaving the curb or shoulder, to travel to the far side of the traveled way or to a median.
39. Pedestrian Signal Head—a signal head, which contains the symbols WALKING PERSON (symbolizing WALK) and UPRAISED HAND (symbolizing DONT WALK), that is installed to direct pedestrian traffic at a traffic control signal.
40. Permissive Mode—a mode of traffic control signal operation in which, when a CIRCULAR GREEN signal indication is displayed, left or right turns are permitted to be made after yielding to pedestrians and/or oncoming traffic.

41. Platoon—a group of vehicles or pedestrians traveling together as a group, either voluntarily or involuntarily, because of traffic signal controls, geometrics, or other factors.
42. Preemption Control—the transfer of normal operation of a traffic control signal to a special control mode of operation.
43. Pretimed Operation—a type of traffic control signal operation in which none of the signal phases function on the basis of actuation.
44. Priority Control—a means by which the assignment of right-of-way is obtained or modified.
45. Protected Mode—a mode of traffic control signal operation in which left or right turns are permitted to be made when a left or right GREEN ARROW signal indication is displayed.
46. Pushbutton—a button to activate pedestrian timing.
47. Pushbutton Locator Tone—a repeating sound that informs approaching pedestrians that they are required to push a button to actuate pedestrian timing and that enables pedestrians who have visual disabilities to locate the pushbutton.
48. Ramp Control Signal—a highway traffic signal installed to control the flow of traffic onto a freeway at an entrance ramp or at a freeway-to-freeway ramp connection.
49. Ramp Meter—see Ramp Control Signal.
50. Red Clearance Interval—an optional interval that follows a yellow change interval and precedes the next conflicting green interval.
51. Right-of-Way (Assignment)—the permitting of vehicles and/or pedestrians to proceed in a lawful manner in preference to other vehicles or pedestrians by the display of signal indications.
52. Roadway Network—a geographical arrangement of intersecting roadways.
53. Semiactuated Operation—a type of traffic control signal operation in which at least one, but not all, signal phases function on the basis of actuation.
54. Separate Left-Turn Signal Face—a signal face for controlling a left-turn movement that sometimes displays a different color of circular signal indication than the adjacent through signal faces display.
55. Shared Left-Turn Signal Face—a signal face, for controlling both a left turn movement and the adjacent through movement, that always displays the same color of circular signal indication that the adjacent through signal face or faces display.
56. Signal Backplate—a thin strip of material that extends outward from and parallel to a signal face on all sides of a signal housing to provide a background for improved visibility of the signal indications.
57. Signal Coordination—the establishment of timed relationships between adjacent traffic control signals.
58. Signal Face—that part of a traffic control signal provided for controlling one or more traffic movements on a single approach.
59. Signal Head—an assembly of one or more signal sections.
60. Signal Housing—that part of a signal section that protects the light source and other required components.
61. Signal Indication—the illumination of a signal lens or equivalent device.
62. Signal Lens—that part of the signal section that redirects the light coming directly from the light source and its reflector, if any.
63. Signal Louver—a device that can be mounted inside a signal visor to restrict visibility of a signal indication from the side or to limit the visibility of the signal indication to a certain lane or lanes, or to a certain distance from the stop line.
64. Signal Phase—the right-of-way, yellow change, and red clearance intervals in a cycle that are assigned to an independent traffic movement or combination of movements.
65. Signal Section—the assembly of a signal housing, signal lens, and light source with necessary components to be used for providing one signal indication.
66. Signal System—two or more traffic control signals operating in signal coordination.
67. Signal Timing—the amount of time allocated for the display of a signal indication.

68. Signal Visor—that part of a signal section that directs the signal indication specifically to approaching traffic and reduces the effect of direct external light entering the signal lens.
69. Signal Warrant—a threshold condition that, if found to be satisfied as part of an engineering study, shall result in analysis of other traffic conditions or factors to determine whether a traffic control signal or other improvement is justified.
70. Speed Limit Sign Beacon—a beacon used to supplement a SPEED LIMIT sign.
71. Steady (Steady Mode)—the continuous illumination of a signal indication for the duration of an interval, signal phase, or consecutive signal phases.
72. Stop Beacon—a beacon used to supplement a STOP sign, a DO NOT ENTER sign, or a WRONG WAY sign.
73. Traffic Control Signal (Traffic Signal)—any highway traffic signal by which traffic is alternately directed to stop and permitted to proceed.
74. Vibrotactile Pedestrian Device—a device that communicates, by touch, information about pedestrian timing using a vibrating surface.
75. Visibility-Limited Signal Face or Signal Section—a type of signal face or signal section designed (or shielded, hooded, or louvered) to restrict the visibility of a signal indication from the side, to a certain lane or lanes, or to a certain distance from the stop line.
76. Walk Interval—an interval during which the WALKING PERSON (symbolizing WALK) signal indication is displayed. When a verbal message is provided at an accessible pedestrian signal, the verbal message is "walk sign."
77. Warning Beacon—a beacon used only to supplement an appropriate warning or regulatory sign or marker.
78. Yellow Change Interval—the first interval following the green interval during which the yellow signal indication is displayed.

(This space left intentionally blank)

CHAPTER 4B. TRAFFIC CONTROL SIGNALS—GENERAL

Section 4B.01 General

Standard:

A traffic control signal (traffic signal) shall be defined as any highway traffic signal by which traffic is alternately directed to stop and permitted to proceed.

Traffic shall be defined as pedestrians, bicyclists, ridden or herded animals, vehicles, streetcars, and other conveyances either singularly or together while using any highway for purposes of travel.

Support:

Words such as pedestrians and bicyclists are used redundantly in selected sections of Part 4 to encourage sensitivity to these elements of "traffic."

Standards for traffic control signals are important because traffic control signals need to attract the attention of a variety of road users, including those who are older, those with impaired vision, as well as those who are fatigued or distracted, or who are not expecting to encounter a signal at a particular location.

Section 4B.02 Basis of Installation or Removal of Traffic Control Signals

Guidance:

The selection and use of traffic control signals should be based on an engineering study of roadway, traffic, and other conditions.

Support:

A careful analysis of traffic operations, pedestrian and bicyclist needs, and other factors at a large number of signalized and unsignalized locations, coupled with engineering judgment, has provided a series of signal warrants, described in Chapter 4C, that define the minimum conditions under which installing traffic control signals might be justified.

Guidance:

Engineering judgment should be applied in the review of operating traffic control signals to determine whether the type of installation and the timing program meet the current requirements of all forms of traffic.

If changes in traffic patterns eliminate the need for a traffic control signal, consideration should be given to removing it and replacing it with appropriate alternative traffic control devices, if any are needed.

Option:

If the engineering study indicates that the traffic control signal is no longer justified, removal may be accomplished using the following steps:

A. Determine the appropriate traffic control to be used after removal of the signal.
B. Remove any sight-distance restrictions as necessary.
C. Inform the public of the removal study, for example by installing an informational sign (or signs) with the legend TRAFFIC SIGNAL UNDER STUDY FOR REMOVAL at the signalized location in a position where it is visible to all road users.
D. Flash or cover the signal heads for a minimum of 90 days, and install the appropriate stop control or other traffic control devices.
E. Remove the signal if the engineering data collected during the removal study period confirms that the signal is no longer needed. Instead of total removal of the traffic control signal, the poles and cables may remain in place after removal of the signal heads for continued analysis.

Standard:

Once a traffic signal at an intersection or pedestrian crossing has been energized, it shall not be turned off unless arrangements have been made for temporary control by traffic officers, temporary stop signs or an approved temporary signal.

Section 4B.03 Advantages and Disadvantages of Traffic Control Signals

Support:

When properly used, traffic control signals are valuable devices for the control of vehicular and pedestrian traffic. They assign the right-of-way to the various traffic movements and thereby profoundly influence traffic flow.

Traffic control signals that are properly designed, located, operated, and maintained will have one or more of the following advantages:

A. They provide for the orderly movement of traffic.
B. They increase the traffic-handling capacity of the intersection if:
   1. Proper physical layouts and control measures are used, and
   2. The signal operational parameters are reviewed and updated (if needed) on a regular basis (as engineering judgment determines that significant traffic flow and/or land use changes have occurred) to maximize the ability of the traffic control signal to satisfy current traffic demands.
C. They reduce the frequency and severity of certain types of crashes, especially right-angle collisions.
D. They are coordinated to provide for continuous or nearly continuous movement of traffic at a definite speed along a given route under favorable conditions.
E. They are used to interrupt heavy traffic at intervals to permit other traffic, vehicular or pedestrian, to cross.

Traffic control signals are often considered a panacea for all traffic problems at intersections. This belief has led to traffic control signals being installed at many locations where they are not needed, adversely affecting the safety and efficiency of vehicular, bicycle, and pedestrian traffic.

Traffic control signals, even when justified by traffic and roadway conditions, can be ill-designed, ineffectively placed, improperly operated, or poorly maintained. Improper or unjustified traffic control signals can result in one or more of the following disadvantages:

A. Excessive delay;
B. Excessive disobedience of the signal indications;
C. Increased use of less adequate routes as road users attempt to avoid the traffic control signals; and
D. Significant increases in the frequency of collisions (especially rear-end collisions).

Section 4B.04 <u>Alternatives to Traffic Control Signals</u>

Guidance:

Since vehicular delay and the frequency of some types of crashes are sometimes greater under traffic signal control than under STOP sign control, consideration should be given to providing alternatives to traffic control signals even if one or more of the signal warrants has been satisfied.

Option:

These alternatives may include, but are not limited to, the following:

A. Installing signs along the major street to warn road users approaching the intersection;
B. Relocating the stop line(s) and making other changes to improve the sight distance at the intersection;
C. Installing measures designed to reduce speeds on the approaches;
D. Installing a flashing beacon at the intersection to supplement STOP sign control;
E. Installing flashing beacons on warning signs in advance of a STOP sign controlled intersection on major-and/or minor-street approaches;
F. Adding one or more lanes on a minor-street approach to reduce the number of vehicles per lane on the approach;
G. Revising the geometrics at the intersection to channelize vehicular movements and reduce the time required for a vehicle to complete a movement, which could also assist pedestrians;
H. Installing roadway lighting if a disproportionate number of crashes occur at night;
I. Restricting one or more turning movements, perhaps on a time-of-day basis, if alternate routes are available;
J. If the warrant is satisfied, installing multiway STOP sign control;
K. Installing a roundabout intersection; and
L. Employing other alternatives, depending on conditions at the intersection.

Section 4B.05 <u>Adequate Roadway Capacity</u>

Support:

The delays inherent in the alternating assignment of right-of-way at intersections controlled by traffic control signals can frequently be reduced by widening the major roadway, the minor roadway, or both

roadways. Widening the minor roadway often benefits the operations on the major roadway, because it reduces the green time that must be assigned to minor-roadway traffic. In urban areas, the effect of widening can be achieved by eliminating parking on intersection approaches. It is desirable to have at least two lanes for moving traffic on each approach to a signalized location. Additional width on the departure side of the intersection, as well as on the approach side, will sometimes be needed to clear traffic through the intersection effectively.

Guidance:

Adequate roadway capacity should be provided at a signalized location. Before an intersection is widened, the additional green time pedestrians need to cross the widened roadways should be considered to determine if it will exceed the green time saved through improved vehicular flow.

Section 4B.101(CA) Traffic Signal Development Procedures – Introduction

Support:

General requirements for the development of traffic signal, lighting and electrical systems projects are noted in the Department of Transportation's Project Development Procedures Manual. See Section 1A.11 for information regarding this publication. The cost of traffic signals on Federal Aid highway projects is eligible for federal participation under certain conditions.

Option:

The preparation of a Project Study Report may be required for major traffic signal lighting and/or electrical system projects for scoping and programming purposes.

Guidance:

The Department of Transportation's Project Development Procedures Manual and the appropriate Program Advisor should be consulted to determine specific reporting requirements.

Section 4B.102(CA) Project Report

Standard:

The Department of Transportation's District shall prepare a project report of the investigation of conditions at locations where a new traffic signal is to be installed, an existing traffic signal is to be modified or an existing traffic signal is to be removed on the State highway. The Department of Transportation's District Directors are authorized to approve project reports in accordance with the current departmental policies contained in the Project Development Procedures Manual. Three copies of the District-approved project report shall be forwarded to the Department of Transportation's Chief, State and Local Project Development. A project report shall be prepared whether the work is performed by the State or by others, if the traffic signal is located on the State highway.

Guidance:

General requirements for project reports are noted in the Department of Transportation's Project Development Procedures Manual. A project report for the installation, modification (except for upgrading projects involving specific equipment) or removal of a traffic signal should include the following specific information:

1. Traffic Counts.
   a) Both pedestrian and vehicular traffic counts should include the periods of the average day when the signals would appear to be needed most. The counts should be at least eight hours in duration, not necessarily consecutive, but including a.m. and p.m. peak hours.
   b) Traffic counts for a new signal shall be shown on appropriate Traffic Signal Warrant Sheets and a Directional Traffic Count Sheet. See Figures 4C-101(CA) thru 4C-103(CA).
   c) Where pedestrian volumes are significant, show the volume on each crosswalk for the same periods as the vehicle count.
   d) When estimated traffic volumes are used in establishing traffic signal warrants, they should be prepared on Form TS-10D. See Figure 4C-103(CA).
2. Collision Diagram.

   A collision diagram for the intersection covering the recent collision experience history. The diagram should cover a 3-year interval.

3. Condition Diagram.
   A condition diagram showing existing roadway conditions. Any railroad grade crossing within 60 m (200 ft) of the intersection should be shown.
4. Improvement Diagram.
   A diagram showing existing and proposed signals, phasing, channelization and other proposed improvements. This may be combined with 1, 2 and/or 3 on a single plan.
5. Estimate.
   An estimate of the cost of the project (including State furnished materials) and the proposed method of financing.
6. Other Specialized Data When Appropriate:
   a. Classification of Vehicles. The classification is required when it is a significant factor in affecting intersection capacity.
   b. Critical Speed (85th percentile) of Approaching Vehicles. This is the speed at a point unaffected by existing controls.
   c. Time-Space Diagram. When the project involves a coordinated traffic signal system.

Section 4B.103(CA) Submittals

Support:

General requirements for the submittal of plans, specifications and estimates are noted in the Department of Transportation's Project Development Procedures Manual and the PS&E Guide. See Section 1A.11 for information regarding these publications.

Standard:

All electrical plans shall bear the following: "Note: This plan accurate for electrical work only."

Section 4B.104(CA) Financing

Guidance:

Unless previously budgeted, the financing of a project should be considered only after receipt of the PS&E Report and cooperative agreements.

Support:

Normally, the costs of a new traffic signal or the modification of a signal or signal system are to be shared with a local agency.

Option:

In situations where a new traffic signal or a modification to an existing traffic signal or traffic signal system is urgently needed to improve safety or traffic flow on the State highway and the local agencies are unable to finance their prorated share of the cost, the State may accept a lesser participation, or even no participation, by the local authorities.

Standard:

The definition of "urgently needed" shall be made by the Department of Transportation's District Director.

The cost of small projects such as modifications to existing traffic signals (detectors, signal heads, mast arms, etc.) where the prorated share of the local agency is $3,000 or less, shall be at 100% State expense.

Section 4B.105(CA) Design Cost

Standard:

The following criteria shall apply in determining the amount of participation in the design cost by the State and a local agency:

a Where the State prepares plans for the installation or modification of a traffic signal or a traffic signal system on a State highway, the design costs should be shared with the local agency. Where the local agency is to prepare the plans, the State may participate in the design costs. Participation should be the same as construction cost participation and be covered by a cooperative agreement.

Guidance:

b Estimated design costs should be determined on the basis of an agreed fixed percentage of the total project costs. The fixed percentage should be based on historical design costs for projects in the price range concerned.

Standard:

c Where the State is requested by a local agency to prepare plans and specifications for a traffic signal project that does not involve State participation in the construction costs, the design costs shall be borne entirely by the local agency or others. The State may, however, assume the design engineering costs and the construction engineering costs, where the local agency agrees to pay all of the construction costs for a warranted project and where all of the costs would normally be shared on a prorated basis.

Section 4B.106(CA) Construction Costs - Conventional Highways

Standard:

The following criteria shall apply in determining the amount of the construction costs by the State and local agency for a traffic signal, safety lighting, and channelization or widening project on conventional State highways.

Channelization and/or Widening Costs. On cooperatively financed projects, the channelization and/or widening costs shall be shared as follows:

- Channelization on and/or widening of the State highway shall be at 100% State expense.
- Channelization on and/or widening of the local street shall be at 100% local agency expense.
- Where the local agency's portion of the channelization or widening is a minor part of the channelization or widening being constructed by the State and the local agency's share of the work amounts to $3,000, or less, the State may assume the entire cost of the channelization or widening.

Channelization and/or widening required, as a part of the conditions of a permit by a private party shall be at 100% expense of the private party.

In Cases A, B, and D listed below, the costs of constructing the electrical facilities are to be shared by the State and local agencies. The costs shall be shared on a prorated basis in the same ratio as the number of legs in the intersection under each agency's jurisdiction bears to the total number of legs.

Case A. Installation or Modification of a Traffic Signal and/or Safety Lighting at an Existing Intersection. When a traffic signal and/or safety lighting is to be installed or modified at the intersection of a State highway and a local road, local agency participation in the installation or modification costs shall be sought.

Guidance:

Case B. Existing Driveways at Existing Signalized Intersections. A private driveway that constitutes a leg at an existing signalized intersection should be treated as follows:

1. If the driveway does not generate appreciable traffic, no control is required.
2. If the driveway serves an area that generates sufficient traffic to constitute a problem, it should be controlled. One example of control is the use of a red flashing beacon and/or a Right Turn Arrow ONLY (R3-5R) sign to control egress from the private driveway. Another would be to provide signal indications for the private driveway.

Standard:

3. Costs shall be as in Case D.

Case C. A New Road or Driveway at an Existing Signalized Intersection. Where a new road or driveway is to be constructed to enter an existing "T" intersection, the cost of necessary right-of-way, traffic signal and/or safety lighting shall be at 100% local agency or permittee expense. The cost shall include the signal faces and detectors for the new approach and signal faces and detectors for left turns into the new approach and channelization, if necessary.

Case D. Installation of a Traffic Signal and/or Safety Lighting at an existing intersection with a Driveway. Where a traffic signal and/or safety lighting is to be installed at an existing intersection serving an area which generates sufficient traffic to constitute a problem that includes a private driveway as the fourth approach, the cost of signal and lighting equipment for the driveway approach shall be included in the cost of the entire installation.

Where one or more legs of the intersection are under the jurisdiction of a local agency, the construction costs shall be shared with the local agency. The cost of the driveway leg shall be included with the local agency's share. It shall be the responsibility of the local agency to obtain the right-of-way, right-of-entry or easement necessary to install and maintain the signal equipment to be located on private property.

Case E. Reconstruction of a Conventional State Highway. When it is necessary to widen or reconstruct a State highway, the reconstruction and relocation of traffic control devices and safety lighting systems, shall be at 100% State expense. Local participation for purposes of expediting a project should be accepted. Additional traffic control devices installed in connection with reconstruction of a conventional highway are to be treated as in Case A.

Case F. Relocation of a Conventional State Highway. When an existing State highway is relocated, the State will install warranted traffic control devices and safety lighting at State expense. Local participation will not be required. If, however, a local authority wishes to participate in a project in order to expedite it, local participation should be accepted.

Case G. Installation of a Traffic Signal and/or Safety Lighting at a Private Driveway or Privately Owned Street. The cost of a new traffic signal and/or safety lighting installed at a private driveway or privately owned street (i.e., not under the jurisdiction of a city or county) shall be entirely at the expense of the property owner or developer.

The permittee shall grant the State access rights to the private property at any time for the purpose of maintaining or timing the signal and lighting.

Upon installation, all rights, title and interest in the traffic signal equipment shall be granted to the State by the permittee. In the event that the State finds it advisable for the signals to be removed, the State will remove and salvage the equipment.

Case H. Reconstruction of Existing Facilities. When affected by State highway construction, existing street lighting, police and fire alarm systems, and similar systems owned by a city, county or publicly owned service district shall be relocated at the sole expense of the owner, unless prior rights can be established.

Case I. School Traffic Signals and Flashing Beacons. Where traffic signals and/or flashing beacons are justified only by the School Area Traffic Signal Warrant on a State highway, the installation shall be at 100% State expense. When any other warrant is met also, the cost is shared in the usual manner.

Section 4B.107(CA) Construction Costs – Freeways

Standard:

The installation of electrical work and channelization at an intersection of a freeway ramp and a local road shall be at 100% State expense if such improvements are warranted at the time the freeway is to be opened to traffic, or if they are estimated to be warranted within five years after the date the freeway is opened to traffic.

Support:

It can be difficult to accurately predict the traffic pattern at interchanges at the time of the freeway design. Therefore, the need for signals at the ramp connections to local roads cannot always be anticipated.

Standard:

If within five years after the date of completion of the freeway, the interchange does not operate in the manner intended, and signal warrants are met, it shall be the policy to provide signals, lighting, channelization or roadway widening as necessary to facilitate the flow of traffic through the interchange. This work shall be done entirely at State expense in the same manner as it would have been done had it been planned in the original freeway project. This shall include widening of roadway approaches to proposed signalized ramp intersections in accordance with present design practice entirely at State expense.

After the five-year period, the cost of installation shall be financed in the same manner as for existing intersections.

Guidance:

Approval by local agencies should be obtained for changes to roads under their jurisdiction.

Option:

In lieu of treating each ramp intersection individually and sharing the costs on the basis of the number of legs under each jurisdiction, the concept of the overall facility as described in the Department of Transportation's Maintenance Manual may be used. See Section 1A.11 for information regarding this publication.

Standard:

Frontage roads or portions of frontage roads, which serve as connections between ramps to or from the freeway and existing public roads and which are retained under State jurisdiction, shall be considered as freeway ramps and electrical work at the intersections shall be financed as described above.

Any time the interchange is revised by adding or relocating ramps, it is considered a new interchange and the cost of signals at the ramp terminals and/or the connection to the local road shall be at 100% State expense.

Section 4B.108(CA) Roadway Improvements by Local Agencies

Standard:

Any new connection of a local street to a State highway, including any electrical work, widening and/or channelization required within the State highway right of way, shall be at 100% local agency expense.

At existing intersections any relocation or improvement of electrical facilities due to widening and/or channelization of the local street shall be at 100% local agency expense.

Section 4B.109(CA) Cooperative Agreements

Support:

When a local agency participates in the various project costs, a cooperative agreement is required.

Standard:

Each agreement shall include a statement of ownership, maintenance and operation.

Support:

Pre-approved agreement forms and procedure details are available.

Section 4B.110(CA) Engineering Services for Local Agencies

Standard:

Contracts with local agencies for the State to provide traffic signal control system engineering services shall include a clause relating to "Legal Relationships and Responsibilities".

Support:

Pre-approved wording is available.

Section 4B.111(CA) Salvaged Electrical Equipment

Support:

A construction project sometimes includes the removal of traffic signal, lighting or other electrical equipment that is not to be reused on the particular project.

Guidance:

The determination as to whether particular electrical equipment is salvable should be made at the Department of Transportation's District level. The determination as to whether or not to salvage existing equipment should be made on the basis of the economic benefit to the State and on the conservation of energy and/or materials that would result from salvaging and/or reinstallation. Equipment should be salvaged if it falls within one of the following categories:

- It is an item for which there is a foreseeable use.
- It is part of an electrical installation owned jointly with another agency and the other agency has requested the salvaged equipment.
- It is usable in some other Department of Transportation's District.
- It can be immediately disposed of by other means.

Standard:

All electrical equipment removed and determined not to be salvable shall become the property of the contractor.

Equipment determined to be salvable shall be disposed of as follows:

- If the electrical installation is jointly owned by the State and one or more local agencies, each of the owners shall share in the salvage value. The local agencies shall be given first choice in obtaining the salvaged equipment. The agency obtaining the salvaged equipment shall reimburse the other agency in accordance with the proportionate ownership.
- Where the State or local agency is replacing existing electrical equipment without the other agency participating in the cost of the new equipment, the salvaged equipment shall belong to the party or parties who bore the cost of the new equipment unless otherwise specified in an agreement or encroachment permit.

The salvage value shall be determined at the Department of Transportation's District level during preparation of the preliminary report.

Guidance:

The salvage value should be such that if the equipment were taken into State storage it could be used economically for maintenance or as State-furnished material on contracts. The estimated salvage value should make the equipment more attractive to local agencies than the money representing the other partner's share of the salvage value. Wire and wiring supplies such as conduit, junction boxes, and connectors, and other materials should be considered as a lot at no value, or in any case, not more than the nominal sum of $1.

Support:

Often, salvaged electrical equipment is available for use on new installations; in many cases this will result in considerable savings.

Section 4B.112(CA) Encroachment Permits

Standard:

Encroachment permits are required for a local agency or a private party to install or modify traffic signals and street lighting on a State highway.

Guidance:

Plans and Specifications prepared by Permittees should conform to State Standard Specifications, Standard Plans and be submitted to the Department of Transportation's District for review and approval.

Standard:

In each case, a statement of ownership, maintenance and operation shall be included in the permit.

Support:

A Permit Engineering Evaluation Report (PEER) may be prepared in lieu of a project report for all projects estimated to cost $1,000,000 or less, as part of the encroachment permit review process. Instructions for PEER's are found in the Department of Transportation's Project Development Procedures Manual and the Encroachment Permits Manual. See Section 1A.11 for information regarding these publications.

Standard:

All projects financed, in whole or in part, from retail transactions and use taxes and projects costing more than $1,000,000 requires a cooperative agreement.

Section 4B.113(CA) Modifications of Existing Signals

Guidance:

Where existing signals are to be modified, construction plans should include a separate plan of the existing system as well as a plan showing the modifications.

Option:

It may also be necessary to include a tabulation on the plan showing such appurtenances as backplates and special signal faces that may be difficult to discern on a complicated plan.

Guidance:

The design of any signal modification project should include adequate consideration for keeping the existing signals in operation while the modification work is being done.

Section 4B.114(CA) Signals on Poles Owned by Others

Option:

Traffic signal equipment may be attached to poles owned by utility companies or other agencies when it is desired to keep the number of poles at an intersection to a minimum.

Guidance:

In such cases, the Agency should enter into an agreement with the owner of the pole. The agreement should be written to hold the owner of the pole free of liability relative to operation of the traffic signal or damage to the pole and to make the State or Local Transportation Agency responsible for moving the equipment in the event the pole is removed or relocated.

(This space left intentionally blank)

(This page left intentionally blank)

CHAPTER 4C. TRAFFIC CONTROL SIGNAL NEEDS STUDIES

Section 4C.01 Studies and Factors for Justifying Traffic Control Signals

Standard:

An engineering study of traffic conditions, pedestrian characteristics, and physical characteristics of the location shall be performed to determine whether installation of a traffic control signal is justified at a particular location.

The investigation of the need for a traffic control signal shall include an analysis of the applicable factors contained in the following traffic signal warrants and other factors related to existing operation and safety at the study location:

Warrant 1, Eight-Hour Vehicular Volume.
Warrant 2, Four-Hour Vehicular Volume.
Warrant 3, Peak Hour.
Warrant 4, Pedestrian Volume.
Warrant 5, School Crossing.
Warrant 6, Coordinated Signal System.
Warrant 7, Crash Experience.
Warrant 8, Roadway Network.

The satisfaction of a traffic signal warrant or warrants shall not in itself require the installation of a traffic control signal.

Support:

Sections 8D.07 and 10D.05 contain information regarding the use of traffic control signals instead of gates and/or flashing light signals at highway-railroad grade crossings and highway-light rail transit grade crossings, respectively.

Guidance:

A traffic control signal should not be installed unless one or more of the factors described in this Chapter are met.

A traffic control signal should not be installed unless an engineering study indicates that installing a traffic control signal will improve the overall safety and/or operation of the intersection.

A traffic control signal should not be installed if it will seriously disrupt progressive traffic flow.

The study should consider the effects of the right-turn vehicles from the minor-street approaches. Engineering judgment should be used to determine what, if any, portion of the right-turn traffic is subtracted from the minor-street traffic count when evaluating the count against the above signal warrants.

Engineering judgment should also be used in applying various traffic signal warrants to cases where approaches consist of one lane plus one left-turn or right-turn lane. The site-specific traffic characteristics dictate whether an approach should be considered as one lane or two lanes. For example, for an approach with one lane for through and right-turning traffic plus a left-turn lane, engineering judgment could indicate that it should be considered a one-lane approach if the traffic using the left-turn lane is minor. In such a case, the total traffic volume approaching the intersection should be applied against the signal warrants as a one-lane approach. The approach should be considered two lanes if approximately half of the traffic on the approach turns left and the left-turn lane is of sufficient length to accommodate all left-turn vehicles.

Similar engineering judgment and rationale should be applied to a street approach with one lane plus a right-turn lane. In this case, the degree of conflict of minor-street right-turn traffic with traffic on the major street should be considered. Thus, right-turn traffic should not be included in the minor-street volume if the movement enters the major street with minimal conflict. The approach should be evaluated as a one-lane approach with only the traffic volume in the through/left-turn lane considered.

At a location that is under development or construction and where it is not possible to obtain a traffic count that would represent future traffic conditions, hourly volumes should be estimated as part of an engineering study for comparison with traffic signal warrants. Except for locations where the engineering study uses the satisfaction of Warrant 8 to justify a signal, a traffic control signal installed under projected conditions should have an engineering study done within 1 year of putting the signal into stop-and-go

operation to determine if the signal is justified. If not justified, the signal should be taken out of stop-and-go operation or removed.

For signal warrant analysis, a location with a wide median, even if the median width is greater than 9 m (30 ft), should be considered as one intersection.

Option:

At an intersection with a high volume of left-turn traffic from the major street, the signal warrant analysis may be performed in a manner that considers the higher ~~of the major-street left-turn volumes as the "minor-street" volume and the corresponding single direction of opposing traffic on the major street as the "major-street" volume~~ volume of the major-street left-turn volumes plus the higher volume minor-street approach as the "minor street" volume and both approaches of the major street minus the higher of the major-street left-turn volume as "major street" volume.

For signal warrant analysis, bicyclists may be counted as either vehicles or pedestrians.

Support:

When performing a signal warrant analysis, bicyclists riding in the street with other vehicular traffic are usually counted as vehicles and bicyclists who are clearly using pedestrian facilities are usually counted as pedestrians.

Option:

Engineering study data may include the following:

A. The number of vehicles entering the intersection in each hour from each approach during 12 hours of an average day. It is desirable that the hours selected contain the greatest percentage of the 24-hour traffic volume.

B. Vehicular volumes for each traffic movement from each approach, classified by vehicle type (heavy trucks, passenger cars and light trucks, public-transit vehicles, and, in some locations, bicycles), during each 15-minute period of the 2 hours in the morning and 2 hours in the afternoon during which total traffic entering the intersection is greatest.

C. Pedestrian volume counts on each crosswalk during the same periods as the vehicular counts in Item B above and during hours of highest pedestrian volume. Where young, elderly, and/or persons with physical or visual disabilities need special consideration, the pedestrians and their crossing times may be classified by general observation.

D. Information about nearby facilities and activity centers that serve the young, elderly, and/or persons with disabilities, including requests from persons with disabilities for accessible crossing improvements at the location under study. These persons might not be adequately reflected in the pedestrian volume count if the absence of a signal restrains their mobility.

E. The posted or statutory speed limit or the 85th-percentile speed on the uncontrolled approaches to the location.

F. A condition diagram showing details of the physical layout, including such features as intersection geometrics, channelization, grades, sight-distance restrictions, transit stops and routes, parking conditions, pavement markings, roadway lighting, driveways, nearby railroad crossings, distance to nearest traffic control signals, utility poles and fixtures, and adjacent land use.

G. A collision diagram showing crash experience by type, location, direction of movement, severity, weather, time of day, date, and day of week for at least 1 year.

The following data, which are desirable for a more precise understanding of the operation of the intersection, may be obtained during the periods specified in Item B of the preceding paragraph:

A. Vehicle-hours of stopped time delay determined separately for each approach.

B. The number and distribution of acceptable gaps in vehicular traffic on the major street for entrance from the minor street.

C. The posted or statutory speed limit or the 85th-percentile speed on controlled approaches at a point near to the intersection but unaffected by the control.

D. Pedestrian delay time for at least two 30-minute peak pedestrian delay periods of an average weekday or like periods of a Saturday or Sunday.

E. Queue length on stop-controlled approaches.

Standard:

Delay, congestion, approach conditions, driver confusion, future land use or other evidence of the need for right of way assignment beyond that which could be provided by stop sign shall be demonstrated.

Support:

Figure 4C–101(CA) and 4C-103(CA) are examples of warrant sheets.

Guidance:

Figure 4C-103(CA) should be used only for new intersections or other locations where it is not reasonable to count actual traffic volumes.

Section 4C.02 Warrant 1, Eight-Hour Vehicular Volume

Support:

The Minimum Vehicular Volume, Condition A, is intended for application at locations where a large volume of intersecting traffic is the principal reason to consider installing a traffic control signal.

The Interruption of Continuous Traffic, Condition B, is intended for application at locations where Condition A is not satisfied and where the traffic volume on a major street is so heavy that traffic on a minor intersecting street suffers excessive delay or conflict in entering or crossing the major street.

It is intended that Warrant 1 be treated as a single warrant. If Condition A is satisfied, then the criteria for Warrant 1 is satisfied and Condition B and the combination of Conditions A and B are not needed. Similarly, if Condition B is satisfied, then the criteria for Warrant 1 is satisfied and the combination of Conditions A and B is not needed.

Standard:

The need for a traffic control signal shall be considered if an engineering study finds that one of the following conditions exist for each of any 8 hours of an average day:

A. The vehicles per hour given in both of the 100 percent columns of Condition A in Table 4C-1 exist on the major-street and the higher-volume minor-street approaches, respectively, to the intersection; or

B. The vehicles per hour given in both of the 100 percent columns of Condition B in Table 4C-1 exist on the major-street and the higher-volume minor-street approaches, respectively, to the intersection.

In applying each condition the major-street and minor-street volumes shall be for the same 8 hours. On the minor street, the higher volume shall not be required to be on the same approach during each of these 8 hours.

Option:

If the posted or statutory speed limit or the 85th-percentile speed on the major street exceeds ~~70 km/h~~ 64 km/h or exceeds 40 mph, or if the intersection lies within the built-up area of an isolated community having a population of less than 10,000, the traffic volumes in the 70 percent columns in Table 4C-1 may be used in place of the 100 percent columns.

Guidance:

The combination of Conditions A and B is intended for application at locations where Condition A is not satisfied and Condition B is not satisfied and should be applied only after an adequate trial of other alternatives that could cause less delay and inconvenience to traffic has failed to solve the traffic problems.

Standard:

The need for a traffic control signal shall be considered if an engineering study finds that both of the following conditions exist for each of any 8 hours of an average day:

A. The vehicles per hour given in both of the 80 percent columns of Condition A in Table 4C-1 exist on the major-street and the higher-volume minor-street approaches, respectively, to the intersection; and

B. The vehicles per hour given in both of the 80 percent columns of Condition B in Table 4C-1 exist on the major-street and the higher-volume minor-street approaches, respectively, to the intersection.

These major-street and minor-street volumes shall be for the same 8 hours for each condition; however, the 8 hours satisfied in Condition A shall not be required to be the same 8 hours satisfied in Condition B. On the minor street, the higher volume shall not be required to be on the same approach during each of the 8 hours.

Option:

If the posted or statutory speed limit or the 85th-percentile speed on the major street exceeds ~~70 km/h~~ 64 km/h or exceeds 40 mph, or if the intersection lies within the built-up area of an isolated community having a population of less than 10,000, the traffic volumes in the 56 percent columns in Table 4C-1 may be used in place of the 80 percent columns.

Section 4C.03 Warrant 2, Four-Hour Vehicular Volume

Support:

The Four-Hour Vehicular Volume signal warrant conditions are intended to be applied where the volume of intersecting traffic is the principal reason to consider installing a traffic control signal.

Standard:

The need for a traffic control signal shall be considered if an engineering study finds that, for each of any 4 hours of an average day, the plotted points representing the vehicles per hour on the major street (total of both approaches) and the corresponding vehicles per hour on the higher-volume minor-street approach (one direction only) all fall above the applicable curve in Figure 4C-1 for the existing combination of approach lanes. On the minor street, the higher volume shall not be required to be on the same approach during each of these 4 hours.

Option:

If the posted or statutory speed limit or the 85th-percentile speed on the major street exceeds ~~70 km/h~~ 64 km/h or exceeds 40 mph or if the intersection lies within the built-up area of an isolated community having a population of less than 10,000, Figure 4C-2 may be used in place of Figure 4C-1.

Section 4C.04 Warrant 3, Peak Hour

Support:

The Peak Hour signal warrant is intended for use at a location where traffic conditions are such that for a minimum of 1 hour of an average day, the minor-street traffic suffers undue delay when entering or crossing the major street.

Standard:

This signal warrant shall be applied only in unusual cases, such as office complexes, manufacturing plants, industrial complexes, or high-occupancy vehicle facilities that attract or discharge large numbers of vehicles over a short time.

The need for a traffic control signal shall be considered if an engineering study finds that the criteria in either of the following two categories are met:

A. If all three of the following conditions exist for the same 1 hour (any four consecutive 15-minute periods) of an average day:
   1. The total stopped time delay experienced by the traffic on one minor-street approach (one direction only) controlled by a STOP sign equals or exceeds: 4 vehicle-hours for a one-lane approach; or 5 vehicle-hours for a two-lane approach, and
   2. The volume on the same minor-street approach (one direction only) equals or exceeds 100 vehicles per hour for one moving lane of traffic or 150 vehicles per hour for two moving lanes, and
   3. The total entering volume serviced during the hour equals or exceeds 650 vehicles per hour for intersections with three approaches or 800 vehicles per hour for intersections with four or more approaches.

B. The plotted point representing the vehicles per hour on the major street (total of both approaches) and the corresponding vehicles per hour on the higher-volume minor-street approach (one direction only) for 1 hour (any four consecutive 15-minute periods) of an average

day falls above the applicable curve in Figure 4C-3 for the existing combination of approach lanes.

Option:

If the posted or statutory speed limit or the 85th-percentile speed on the major street exceeds ~~70 km/h~~ 64 km/h or exceeds 40 mph, or if the intersection lies within the built-up area of an isolated community having a population of less than 10,000, Figure 4C-4 may be used in place of Figure 4C-3 to satisfy the criteria in the second category of the Standard.

Section 4C.05 Warrant 4, Pedestrian Volume

Support:

The Pedestrian Volume signal warrant is intended for application where the traffic volume on a major street is so heavy that pedestrians experience excessive delay in crossing the major street.

Standard:

The need for a traffic control signal at an intersection or midblock crossing shall be considered if an engineering study finds that both of the following criteria are met:

A. The pedestrian volume crossing the major street at an intersection or midblock location during an average day is 100 or more for each of any 4 hours or 190 or more during any 1 hour; and

B. There are fewer than 60 gaps per hour in the traffic stream of adequate length to allow pedestrians to cross during the same period when the pedestrian volume criterion is satisfied. Where there is a divided street having a median of sufficient width for pedestrians to wait, the requirement applies separately to each direction of vehicular traffic.

The Pedestrian Volume signal warrant shall not be applied at locations where the distance to the nearest traffic control signal along the major street is less than 90 m (300 ft), unless the proposed traffic control signal will not restrict the progressive movement of traffic.

If this warrant is met and a traffic control signal is justified by an engineering study, the traffic control signal shall be equipped with pedestrian signal heads conforming to requirements set forth in Chapter 4E.

Guidance:

If this warrant is met and a traffic control signal is justified by an engineering study, then:

A. If at an intersection, the traffic control signal should be traffic-actuated and should include pedestrian detectors.

B. If at a nonintersection crossing, the traffic control signal should be pedestrian-actuated, parking and other sight obstructions should be prohibited for at least 30 m (100 ft) in advance of and at least 6.1 m (20 ft) beyond the crosswalk, and the installation should include suitable standard signs and pavement markings.

C. Furthermore, if installed within a signal system, the traffic control signal should be coordinated.

Option:

The criterion for the pedestrian volume crossing the major roadway may be reduced as much as 50 percent if the average crossing speed of pedestrians is less than 1.2 m/sec (4 ft/sec).

A traffic control signal may not be needed at the study location if adjacent coordinated traffic control signals consistently provide gaps of adequate length for pedestrians to cross the street, even if the rate of gap occurrence is less than one per minute.

Section 4C.06 Warrant 5, School Crossing

Support:

The School Crossing signal warrant is intended for application where the fact that school children cross the major street is the principal reason to consider installing a traffic control signal.

Standard:

The need for a traffic control signal shall be considered when an engineering study of the frequency and adequacy of gaps in the vehicular traffic stream as related to the number and size of groups of school children at an established school crossing across the major street shows that the number of adequate gaps in the traffic stream during the period when the children are using the

crossing is less than the number of minutes in the same period (see Section 7A.03) and there are a minimum of 20 students during the highest crossing hour.

Before a decision is made to install a traffic control signal, consideration shall be given to the implementation of other remedial measures, such as warning signs and flashers, school speed zones, school crossing guards, or a grade-separated crossing.

The School Crossing signal warrant shall not be applied at locations where the distance to the nearest traffic control signal along the major street is less than 90 m (300 ft), unless the proposed traffic control signal will not restrict the progressive movement of traffic.

Guidance:

If this warrant is met and a traffic control signal is justified by an engineering study, then:

A. If at an intersection, the traffic control signal should be traffic-actuated and should include pedestrian detectors.
B. If at a nonintersection crossing, the traffic control signal should be pedestrian-actuated, parking and other sight obstructions should be prohibited for at least 30 m (100 ft) in advance of and at least 6.1 m (20 ft) beyond the crosswalk, and the installation should include suitable standard signs and pavement markings.
C. Furthermore, if installed within a signal system, the traffic control signal should be coordinated.

Section 4C.07 <u>Warrant 6, Coordinated Signal System</u>

Support:

Progressive movement in a coordinated signal system sometimes necessitates installing traffic control signals at intersections where they would not otherwise be needed in order to maintain proper platooning of vehicles.

Standard:

The need for a traffic control signal shall be considered if an engineering study finds that one of the following criteria is met:

A. On a one-way street or a street that has traffic predominantly in one direction, the adjacent traffic control signals are so far apart that they do not provide the necessary degree of vehicular platooning.
B. On a two-way street, adjacent traffic control signals do not provide the necessary degree of platooning and the proposed and adjacent traffic control signals will collectively provide a progressive operation.

Guidance:

The Coordinated Signal System signal warrant should not be applied where the resultant spacing of traffic control signals would be less than 300 m (1,000 ft).

Section 4C.08 <u>Warrant 7, Crash Experience</u>

Support:

The Crash Experience signal warrant conditions are intended for application where the severity and frequency of crashes are the principal reasons to consider installing a traffic control signal.

Standard:

The need for a traffic control signal shall be considered if an engineering study finds that all of the following criteria are met:

A. Adequate trial of alternatives with satisfactory observance and enforcement has failed to reduce the crash frequency; and
B. Five or more reported crashes, of types susceptible to correction by a traffic control signal, have occurred within a 12-month period, each crash involving personal injury or property damage apparently exceeding the applicable requirements for a reportable crash; and
C. For each of any 8 hours of an average day, the vehicles per hour (vph) given in both of the 80 percent columns of Condition A in Table 4C-1 (see Section 4C.02), or the vph in both of the 80 percent columns of Condition B in Table 4C-1 exists on the major-street and the higher-volume minor-street approach, respectively, to the intersection, or the volume of pedestrian traffic is

not less than 80 percent of the requirements specified in the Pedestrian Volume warrant. These major-street and minor-street volumes shall be for the same 8 hours. On the minor street, the higher volume shall not be required to be on the same approach during each of the 8 hours.

Option:

If the posted or statutory speed limit or the 85th-percentile speed on the major street exceeds ~~70 km/h~~ 64 km/h or exceeds 40 mph, or if the intersection lies within the built-up area of an isolated community having a population of less than 10,000, the traffic volumes in the 56 percent columns in Table 4C-1 may be used in place of the 80 percent columns.

Section 4C.09 Warrant 8, Roadway Network

Support:

Installing a traffic control signal at some intersections might be justified to encourage concentration and organization of traffic flow on a roadway network.

Standard:

The need for a traffic control signal shall be considered if an engineering study finds that the common intersection of two or more major routes meets one or both of the following criteria:

A. The intersection has a total existing, or immediately projected, entering volume of at least 1,000 vehicles per hour during the peak hour of a typical weekday and has 5-year projected traffic volumes, based on an engineering study, that meet one or more of Warrants 1, 2, and 3 during an average weekday; or

B. The intersection has a total existing or immediately projected entering volume of at least 1,000 vehicles per hour for each of any 5 hours of a nonnormal business day (Saturday or Sunday).

A major route as used in this signal warrant shall have one or more of the following characteristics:

A. It is part of the street or highway system that serves as the principal roadway network for through traffic flow; or

B. It includes rural or suburban highways outside, entering, or traversing a City; or

C. It appears as a major route on an official plan, such as a major street plan in an urban area traffic and transportation study.

Section 4C.101(CA) Criterion for School Crossing Traffic Signals

Standard:

1. The signal shall be designed for full-time operation.
2. Pedestrian signal faces of the International Symbol type shall be installed at all marked crosswalks at signalized intersections along the "Suggested Route to School."
3. If an intersection is signalized under this guideline for school pedestrians, the entire intersection shall be signalized.
4. School area traffic signals shall be traffic actuated type with push buttons or other detectors for pedestrians.

Option:

Non-intersection school pedestrian crosswalk locations may be signalized when justified.

Section 4C.102(CA) Bicycle Signal Warrant

Guidance:

A bicycle signal should be considered for use only when the volume and collision or volume and geometric warrants have been met:

1. Volume; When $W = B \times V$ and $W \geq 50{,}000$ and $B \geq 50$.
   Where: W is the volume warrant. B is the number of bicycles at the peak hour entering the intersection. V is the number of vehicles at the peak hour entering the intersection. B and V shall use the same peak hour.
2. Collision; When 2 or more bicycle/vehicle collisions of types susceptible to correction by a bicycle signal have

occurred over a 12-month period and the responsible public works official determines that a bicycle signal will reduce the number of collisions.

3. Geometric; (a) Where a separate bicycle/ multi use path intersects a roadway. (b) At other locations to facilitate a bicycle movement that is not permitted for a motor vehicle.

(This space left intentionally blank)

Figure 4C-1. Warrant 2, Four-Hour Vehicular Volume

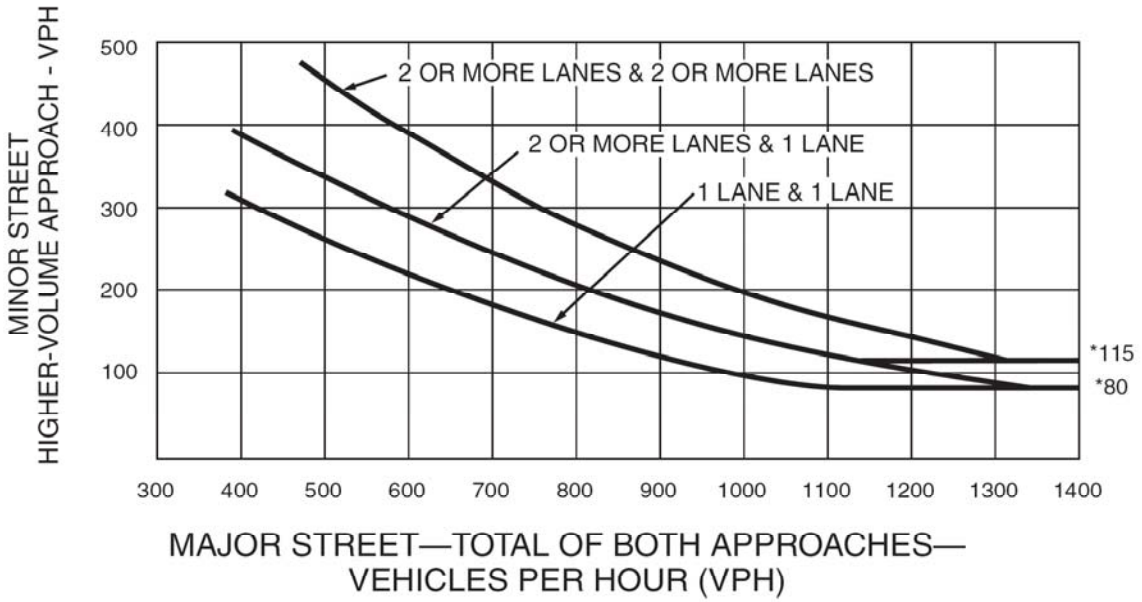

*Note: 115 vph applies as the lower threshold volume for a minor-street approach with two or more lanes and 80 vph applies as the lower threshold volume for a minor-street approach with one lane.

Figure 4C-2. Warrant 2, Four-Hour Vehicular Volume (70% Factor)

(COMMUNITY LESS THAN 10,000 POPULATION OR ABOVE ~~70~~ 64 km/h OR ABOVE 40 mph ON MAJOR STREET)

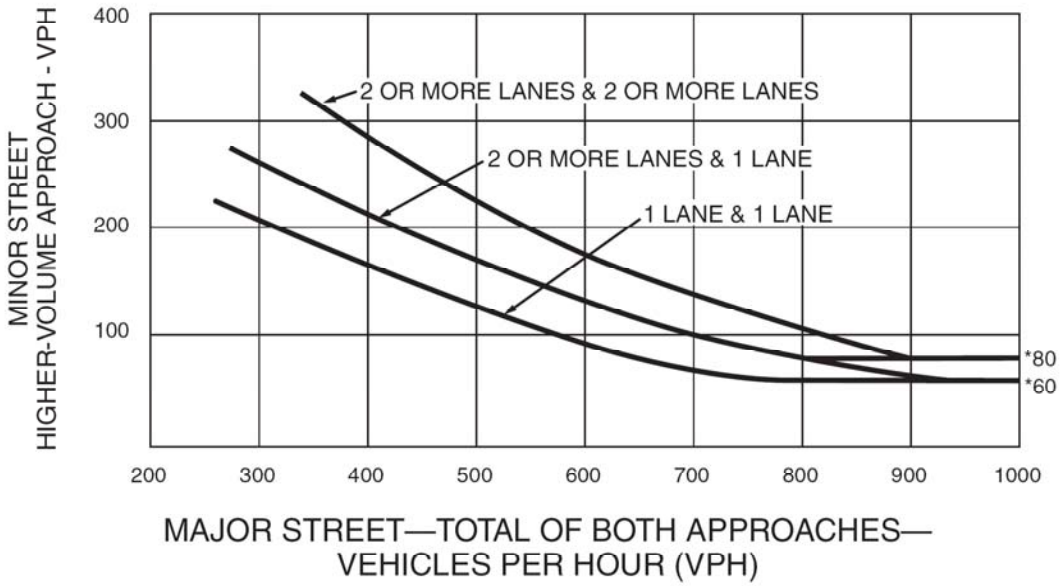

*Note: 80 vph applies as the lower threshold volume for a minor-street approach with two or more lanes and 60 vph applies as the lower threshold volume for a minor-street approach with one lane.

Figure 4C-3. Warrant 3, Peak Hour

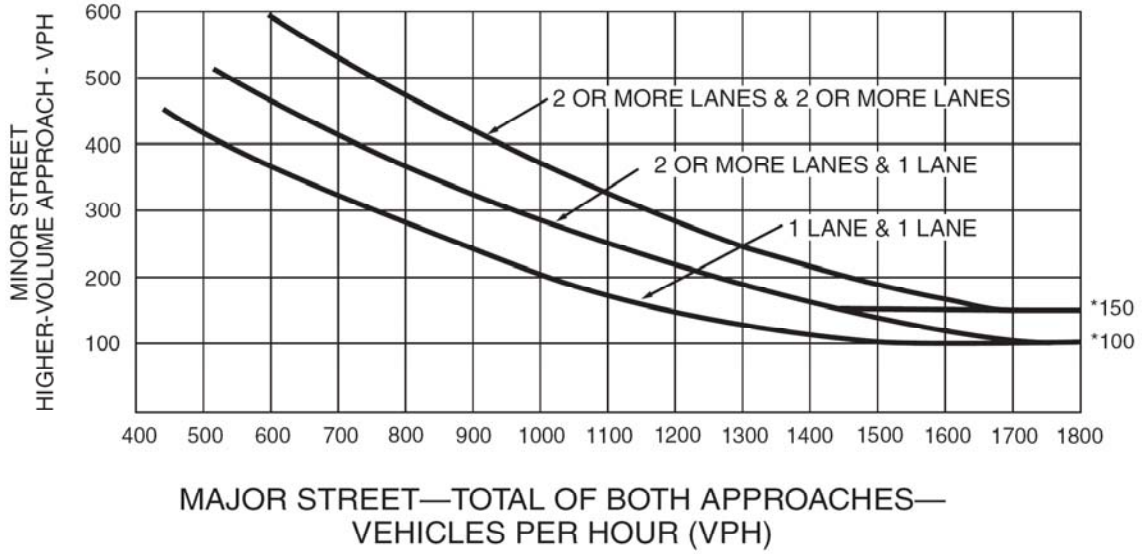

*Note: 150 vph applies as the lower threshold volume for a minor-street approach with two or more lanes and 100 vph applies as the lower threshold volume for a minor-street approach with one lane.

Figure 4C-4. Warrant 3, Peak Hour (70% Factor)

(COMMUNITY LESS THAN 10,000 POPULATION OR ABOVE ~~70~~ 64 km/h OR ABOVE 40 mph ON MAJOR STREET)

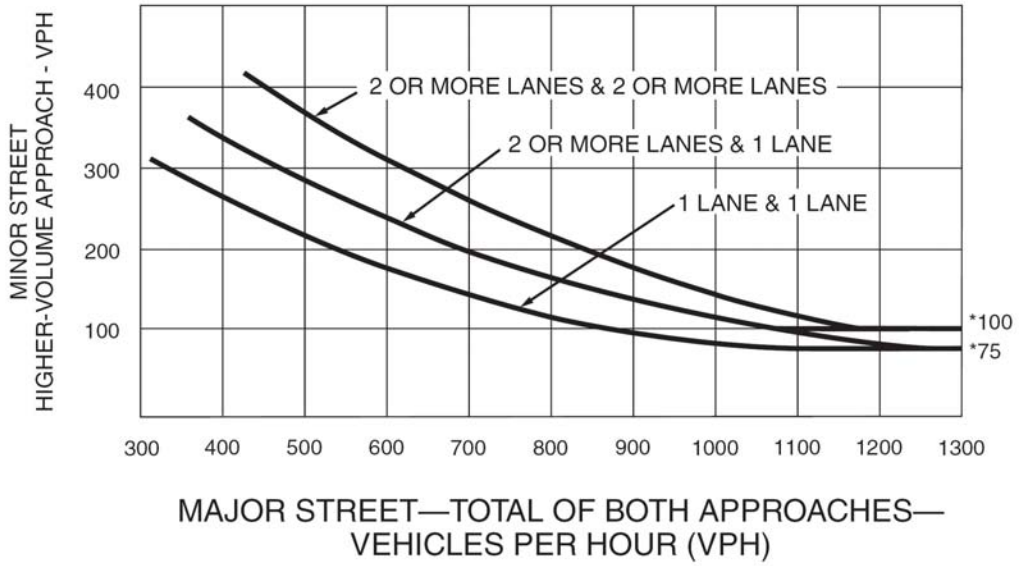

*Note: 100 vph applies as the lower threshold volume for a minor-street approach with two or more lanes and 75 vph applies as the lower threshold volume for a minor-street approach with one lane.

Figure 4C-101 (CA). Traffic Signal Warrants Worksheet (Sheet 1 of 4)

COUNT DATE _____

_____ DIST _____ CO _____ RTE _____ PM

CALC _____ DATE _____
CHK _____ DATE _____

Major St: _____ Critical Approach Speed _____ mph
Minor St: _____ Critical Approach Speed _____ mph

Speed limit or critical speed on major street traffic > 64 km/h (40 mph)..... ☐ or
In built up area of isolated community of < 10,000 population..... ☐
} **RURAL (R)**

☐ **URBAN (U)**

WARRANT 1 - Eight Hour Vehicular Volume **SATISFIED YES ☐ NO ☐**
(Condition A or Condition B or combination of A and B must be satisfied)

Condition A - Minimum Vehicle Volume **100% SATISFIED YES ☐ NO ☐**
80% SATISFIED YES ☐ NO ☐

	MINIMUM REQUIREMENTS (80% SHOWN IN BRACKETS)												Hour
	U	R	U	R									
APPROACH LANES	1		2 or More										
Both Approaches Major Street	500 (400)	350 (280)	600 (480)	420 (336)									
Highest Approach Minor Street	150 (120)	105 (84)	200 (160)	140 (112)									

Condition B - Interruption of Continuous Traffic **100% SATISFIED YES ☐ NO ☐**
80% SATISFIED YES ☐ NO ☐

	MINIMUM REQUIREMENTS (80% SHOWN IN BRACKETS)												Hour
	U	R	U	R									
APPROACH LANES	1		2 or More										
Both Approaches Major Street	750 (600)	525 (420)	900 (720)	630 (504)									
Highest Approach Minor Street	75 (60)	53 (42)	100 (80)	70 (56)									

Combination of Conditions A & B **SATISFIED YES ☐ NO ☐**

REQUIREMENT	CONDITION	✓	FULFILLED
TWO CONDITIONS SATISFIED 80%	A. MINIMUM VEHICULAR VOLUME		Yes ☐ No ☐
	AND, B. INTERRUPTION OF CONTINUOUS TRAFFIC		
AND, AN ADEQUATE TRIAL OF OTHER ALTERNATIVES THAT COULD CAUSE LESS DELAY AND INCONVENIENCE TO TRAFFIC HAS FAILED TO SOLVE THE TRAFFIC PROBLEMS			Yes ☐ No ☐

The satisfaction of a traffic signal warrant or warrants shall not in itself require the installation of a traffic control signal.

Figure 4C-101 (CA). Traffic Signal Warrants Worksheet (Sheet 2 of 4)

WARRANT 2 - Four Hour Vehicular Volume **SATISFIED* YES ☐ NO ☐**

Record hourly vehicular volumes for any four hours of an average day.

APPROACH LANES	One	2 or More				Hour
Both Approaches - Major Street						
Higher Approach - Minor Street						

*All plotted points fall above the curves in Figure 4C-1. (URBAN AREAS)	Yes ☐	No ☐
OR, All plotted points fall above the curves in Figure 4C-2. (RURAL AREAS)	Yes ☐	No ☐

WARRANT 3 - Peak Hour **SATISFIED YES ☐ NO ☐**
(Part A or Part B must be satisfied)

PART A **SATISFIED YES ☐ NO ☐**

(All parts 1, 2, and 3 below must be satisfied for the same one hour, for any four consecutive 15-minute periods)

1. The total delay experienced for traffic on one minor street approach (one direction only) controlled by a STOP sign equals or exceeds four vehicle-hours for a one-lane approach, or five vehicle-hours for a two-lane approach; AND	Yes ☐	No ☐
2. The volume on the same minor street approach (one direction only) equals or exceeds 100 vph for one moving lane of traffic or 150 vph for two moving lanes; AND	Yes ☐	No ☐
3. The total entering volume serviced during the hour equals or exceeds 800 vph for intersections with four or more approaches or 650 vph for intersections with three approaches.	Yes ☐	No ☐

PART B **SATISFIED YES ☐ NO ☐**

APPROACH LANES	One	2 or More		Hour
Both Approaches - Major Street				
Higher Approach - Minor Street				

The plotted point falls above the curve in Figure 4C-3.	Yes ☐	No ☐
OR, The plotted point falls above the curve in Figure 4C-4.	Yes ☐	No ☐

The satisfaction of a traffic signal warrant or warrants shall not in itself require the installation of a traffic control signal.

Figure 4C-101 (CA). Traffic Signal Warrants Worksheet (Sheet 3 of 4)

WARRANT 4 - Pedestrian Volume (All Parts Must Be Satisfied) — **SATISFIED YES ☐ NO ☐**

Part A (Parts 1 or 2 must be satisfied) — **SATISFIED YES ☐ NO ☐**

Hours - - ->

1.	Pedestrian Volume					Any hour ≥ 190	Yes ☐ No ☐
						OR any 4 hours ≥ 100	Yes ☐ No ☐
	Adequate Crossing Gaps					AND < 60 gap/hr	Yes ☐ No ☐

2.	Pedestrian Volume	Any hour ≥ 95	Yes ☐ No ☐
		OR Any 4 hours ≥ 50	Yes ☐ No ☐
		AND ped crossing < 1.2m/s (4 ft/sec)	Yes ☐ No ☐

Part B — **SATISFIED YES ☐ NO ☐**

AND, The distance to the nearest traffic signal along the major street is greater than 90 m (300 ft)	Yes ☐ No ☐
OR, The proposed traffic signal will not restrict progressive traffic flow along the major street.	Yes ☐ No ☐

WARRANT 5 - School Crossing (Parts A and B, or Part C Must Be Satisfied) — **SATISFIED YES ☐ NO ☐**

Part A — **SATISFIED YES ☐ NO ☐**

Gap/Minutes and # of Children

Hour

Gaps vs Minutes	Minutes Children Using Crossing		Gaps < Minutes	YES ☐ NO ☐
	Number of Adequate Gaps		AND Children > 20/hr	YES ☐ NO ☐
School Age Pedestrians Crossing Street / hr				

AND, Consideration has been given to less restrictive remedial measures.	Yes ☐ No ☐

Part B — **SATISFIED YES ☐ NO ☐**

The distance to the nearest traffic signal along the major street is greater than 90 m (300 ft)	Yes ☐ No ☐
OR, The proposed signal will not restrict the progressive movement of traffic.	Yes ☐ No ☐

Part C (All Parts 1, 2, and 3 below must be satisfied) — **SATISFIED YES ☐ NO ☐**

		U	R_y*			
1.	Vehicles/hr	500	350			Yes ☐ No ☐
	AND, School Age Pedestrians Crossing Street / hr	100	70			Yes ☐ No ☐
	OR, School Age Pedestrians Crossing Street / day	500	350			Yes ☐ No ☐

* When the critical (85th percentile approach speed exceeds 55 km/h (35 mph) or the sight distance to the intersection is less than the required stopping distance, rural criteria should be used.

2.	Other signal warrants are met.	Yes ☐ No ☐
3.	The distance to the nearest controlled crossing is greater than 180 m (600 ft).	Yes ☐ No ☐

The satisfaction of a traffic signal warrant or warrants shall not in itself require the installation of a traffic control signal.

Figure 4C-101 (CA). Traffic Signal Warrants Worksheet (Sheet 4 of 4)

WARRANT 6 - Coordinated Signal System **SATISFIED YES ☐ NO ☐**
(All Parts Must Be Satisfied)

MINIMUM REQUIREMENTS	DISTANCE TO NEAREST SIGNAL	
≥ 300 m (1000 ft)	N _____ ft, S _____ ft, E _____ ft, W _____ ft	Yes ☐ No ☐
On a one-way street or a street that has traffic predominantly in one direction, the adjacent traffic control signals are so far apart that they do not provide the necessary degree of vehicular platooning. OR, On a two-way street, adjacent traffic control signals do not provide the necessary degree of platooning and the proposed and adjacent traffic control signals will collectively provide a progressive operation.		Yes ☐ No ☐

WARRANT 7 - Crash Experience Warrant **SATISFIED YES ☐ NO ☐**
(All Parts Must Be Satisfied)

Adequate trial of alternatives with satisfactory observance and enforcement has failed to reduce the crash frequency.			Yes ☐ No ☐
REQUIREMENTS 5 OR MORE	Number of crashes within a 12 month period susceptible to correction by a traffic signal, and involving injury or damage exceeding the requirements for a reportable crash.		Yes ☐ No ☐
REQUIREMENTS	CONDITIONS	✓	
ONE CONDITION SATISFIED 80%	Warrant 1, Condition A - Minimum Vehicular Volume		Yes ☐ No ☐
	OR, Warrant 1, Condition B - Interruption of continuous traffic		
	OR, Warrant 4, Pedestrian Volume Condition Ped Vol ≥ 152 for any hour OR, Ped Vol ≥ 80 for any 4 hours		

WARRANT 8 - Roadway Network **SATISFIED YES ☐ NO ☐**
(All Parts Must Be Satisfied)

MINIMUM VOLUME REQUIREMENTS	ENTERING VOLUMES - ALL APPROACHES			✓	FULFILLED
1000 Veh/Hr	During Typical Weekday Peak Hour _____ Veh/Hr and has 5-year projected traffic volumes that meet one or more of Warrants 1, 2, and 3 during an average weekday. OR During Each of Any 5 Hrs. of a Sat. and/or Sun _____ Veh/Hr				Yes ☐ No ☐
CHARACTERISTICS OF MAJOR ROUTES		MAJOR ROUTE A	MAJOR ROUTE B		
Hwy. System Serving as Principal Network for Through Traffic					
Rural or Suburban Highway Outside Of, Entering, or Traversing a City					
Appears as Major Route on an Official Plan					
Any Major Route Characteristics Met, Both Streets					Yes ☐ No ☐

The satisfaction of a traffic signal warrant or warrants shall not in itself require the installation of a traffic control signal.

Figure 4C-102 (CA). Traffic Count Worksheet

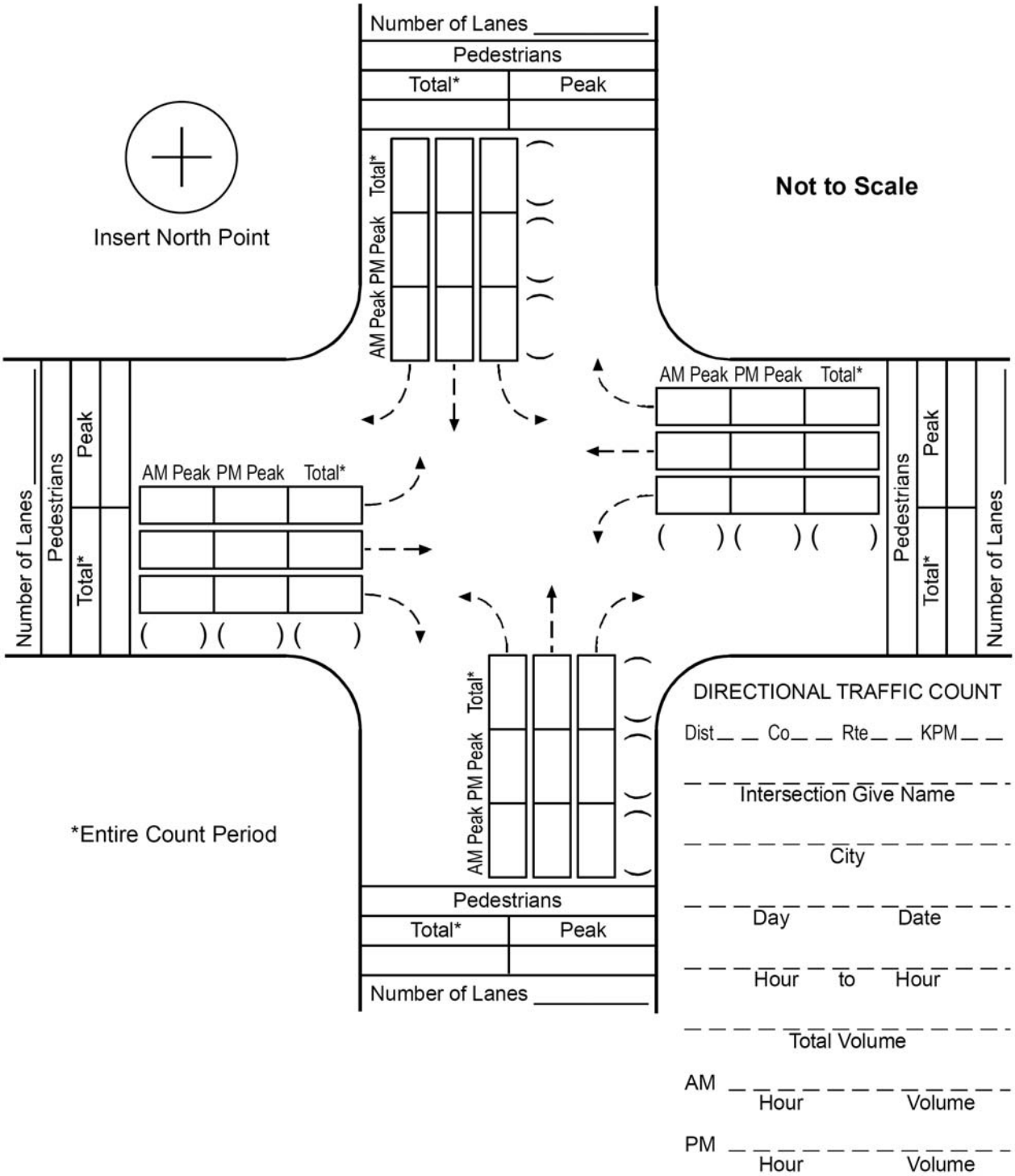

Figure 4C-103 (CA). Traffic Signal Warrants Worksheet (Average Traffic Estimate Form)

COUNT DATE _____

_____ _____ _____ _____
DIST CO RTE PM

CALC _____ DATE _____
CHK _____ DATE _____

Major St: _____ Critical Approach Speed _____ mph
Minor St: _____ Critical Approach Speed _____ mph

Speed limit or critical speed on major street traffic > 64 km/h (40 mph)..... ☐ or
In built up area of isolated community of < 10,000 population..... ☐
} **RURAL (R)**
☐ **URBAN (U)**

(Based on Estimated Average Daily Traffic - See Note)

URBAN..... RURAL.....	Minimum Requirements EADT			
CONDITION A - Minimum Vehicular Volume Satisfied _____ Not Satisfied _____	Vehicles Per Day on Major Street (Total of Both Approaches)		Vehicles Per Day on Higher-Volume Minor Street Approach (One Direction Only)	
Number of lanes for moving traffic on each approach Major Street / Minor Street	Urban	Rural	Urban	Rural
1..... / 1.....	8,000	5,600	2,400	1,680
2 or More..... / 1.....	9,600	6,720	2,400	1,680
2 or More..... / 2 or More.....	9,600	6,720	3,200	2,240
1..... / 2 or More.....	8,000	5,600	3,200	2,240
CONDITION B - Interruption of Continuous Traffic Satisfied _____ Not Satisfied _____	Vehicles Per Day on Major Street (Total of Both Approaches)		Vehicles Per Day on Higher-Volume Minor Street Approach (One Direction Only)	
Number of lanes for moving traffic on each approach Major Street / Minor Street	Urban	Rural	Urban	Rural
1..... / 1.....	12,000	8,400	1,200	850
2 or More..... / 1.....	14,400	10,080	1,200	850
2 or More..... / 2 or More.....	14,400	10,080	1,600	1,120
1..... / 2 or More.....	12,000	8,400	1,600	1,120
Combination of CONDITIONS A + B Satisfied _____ Not Satisfied _____ No one condition satisfied, but following conditions fulfilled 80% or more..... _____ A _____ B	2 CONDITIONS 80%		2 CONDITIONS 80%	

Note: To be used only for NEW INTERSECTIONS or other locations where it is not reasonable to count actual traffic volumes.

The satisfaction of a traffic signal warrant or warrants shall not in itself require the installation of a traffic control signal.

Table 4C-1. Warrant 1, Eight-Hour Vehicular Volume

Condition A—Minimum Vehicular Volume									
Number of lanes for moving traffic on each approach		Vehicles per hour on major street (total of both approaches)				Vehicles per hour on higher-volume minor-street approach (one direction only)			
Major Street	Minor Street	100%[a]	80%[b]	70%[c]	56%[d]	100%[a]	80%[b]	70%[c]	56%[d]
1.....	1.....	500	400	350	280	150	120	105	84
2 or more...	1.....	600	480	420	336	150	120	105	84
2 or more...	2 or more...	600	480	420	336	200	160	140	112
1.....	2 or more....	500	400	350	280	200	160	140	112

Condition B—Interruption of Continuous Traffic									
Number of lanes for moving traffic on each approach		Vehicles per hour on major street (total of both approaches)				Vehicles per hour on higher-volume minor-street approach (one direction only)			
Major Street	Minor Street	100%[a]	80%[b]	70%[c]	56%[d]	100%[a]	80%[b]	70%[c]	56%[d]
1.....	1.....	750	600	525	420	75	60	53	42
2 or more...	1.....	900	720	630	504	75	60	53	42
2 or more...	2 or more...	900	720	630	504	100	80	70	56
1.....	2 or more....	750	600	525	420	100	80	70	56

[a] Basic minimum hourly volume.
[b] Used for combination of Conditions A and B after adequate trial of other remedial measures.
[c] May be used when the major-street speed exceeds ~~70 km/h~~ 64 km/h or exceeds 40 mph or in an isolated community with a population of less than 10,000.
[d] May be used for combination of Conditions A and B after adequate trial of other remedial measures when the major-street speed exceeds ~~70 km/h~~ 64 km/h or exceeds 40 mph or in an isolated community with a population of less than 10,000.

(This space left intentionally blank)

(This page left intentionally blank)

CHAPTER 4D. TRAFFIC CONTROL SIGNAL FEATURES

Section 4D.01 General

Support:

The features of traffic control signals of interest to road users are the location, design, and meaning of the signal indications. Uniformity in the design features that affect the traffic to be controlled, as set forth in this Manual, is especially important for reasonably safe and efficient traffic operations.

Pavement markings (see Part 3) that clearly communicate the operational plan of an intersection to road users play an important role in the effective operation of traffic control signals. By designating the number of lanes, the use of each lane, the length of additional lanes on the approach to an intersection, and the proper stopping points, the engineer can design the signal phasing and timing to best match the goals of the operational plan.

Standard:

When a traffic control signal is not in operation, such as before it is placed in service, during seasonal shutdowns, or when it is not desirable to operate the traffic control signal, the signal faces shall be covered, turned, or taken down to clearly indicate that the traffic control signal is not in operation.

A traffic control signal shall control traffic only at the intersection or midblock location where the signal faces are placed.

STOP signs shall not be used in conjunction with any traffic control signal operation~~, except in either of the following cases:~~

~~A. If the signal indication for an approach is a flashing red at all times; or~~

~~B. If a minor street or driveway is located within or adjacent to the area controlled by the traffic control signal, but does not require separate traffic signal control because an extremely low potential for conflict exists.~~

STOP signs shall not be erected at any entrance to an intersection controlled by traffic signals. Refer to CVC 21355(a).

Midblock crosswalks shall not be signalized if they are located within 90 m (300 ft) from the nearest traffic control signal, unless the proposed traffic control signal will not restrict the progressive movement of traffic.

Guidance:

Midblock crosswalks should not be signalized if they are located within 30 m (100 ft) from side streets or driveways that are controlled by STOP signs or YIELD signs.

Pavement markings should be used at traffic control signal locations as provided in Part 3. If the road surface will not retain pavement markings, signs should be installed to provide the needed road user information.

Engineering judgment should be used to determine the proper phasing and timing for a traffic control signal. Since traffic flows and patterns change, phasing and timing should be reevaluated regularly and updated if needed.

Section 4D.02 Responsibility for Operation and Maintenance

Guidance:

Prior to installing any traffic control signal, the responsibility for the maintenance of the signal and all of the appurtenances, hardware, software, and the timing plan(s) should be clearly established. The responsible agency should provide for the maintenance of the traffic control signal and all of its appurtenances in a competent manner.

To this end the agency should:

A. Keep every controller assembly in effective operation in accordance with its predetermined timing schedule; check the operation of the controller assembly frequently enough to verify that it is operating in accordance with the predetermined timing schedule; and establish a policy to maintain a record of all timing changes and that only authorized persons are permitted to make timing changes;

B. Clean the optical system of the signal sections and replace the light sources as frequently as experience proves necessary;
C. Clean and service equipment and other appurtenances as frequently as experience proves necessary;
D. Provide for alternate operation of the traffic control signal during a period of failure, using flashing mode or manual control, or manual traffic direction by proper authorities as might be required by traffic volumes or congestion, or by erecting other traffic control devices;
E. Have properly skilled maintenance personnel available without undue delay for all emergency and lamp failure calls;
F. Provide spare equipment to minimize the interruption of traffic control signal operation as a result of equipment failure;
G. Provide for the availability of properly skilled maintenance personnel for the repair of all components; and
H. Maintain the appearance of the signal displays and equipment.

Support:

The Department of Transportation is responsible for the operation of all State highway traffic signals, regardless of whether the signal is maintained by the State or by others.

Standard:

State highway traffic signals shall include, but are not necessarily limited to, all signals on a State highway and at ramp connections to local streets.

Maintenance and operation of highway traffic signals involving State Highways by an agency other than the Department of Transportation shall require a jointly approved written agreement.

Section 4D.03 <u>Provisions for Pedestrians</u>

Support:

Chapter 4E contains additional information regarding pedestrian signals.

Standard:

The design and operation of traffic control signals shall take into consideration the needs of pedestrian as well as vehicular traffic.

If engineering judgment indicates the need for provisions for a given pedestrian movement, signal faces conveniently visible to pedestrians shall be provided by pedestrian signal heads or a signal face for an adjacent vehicular movement.

Guidance:

Safety considerations should include the installation, where appropriate, of accessible pedestrian signals (see Sections 4E.06 and 4E.09) that provide information in nonvisual format (such as audible tones, verbal messages, and/or vibrating surfaces).

Where pedestrian movements regularly occur, pedestrians should be provided with sufficient time to cross the roadway by adjusting the traffic control signal operation and timing to provide sufficient crossing time every cycle or by providing pedestrian detectors.

Option:

If it is desirable to prohibit certain pedestrian movements at a traffic control signal, a PEDESTRIANS PROHIBITED (R9-3) or No Pedestrian Crossing (R9-3a) sign may be used (see Section 2B.44).

Section 4D.04 <u>Meaning of Vehicular Signal Indications</u>

Support:

The "Uniform Vehicle Code" (see Section 1A.11) is the primary source for the standards for the meaning of vehicular signal indications to both vehicle operators and pedestrians as set forth below, and the standards for the meaning of separate pedestrian signal indications as set forth in Section 4E.02.

Standard:

The following meanings shall be given to highway traffic signal indications for vehicles and pedestrians:

A. Steady green signal indications shall have the following meanings:

1. Traffic, except pedestrians, facing a CIRCULAR GREEN signal indication is permitted to proceed straight through or turn right or left except as such movement is modified by lane-use signs, turn prohibition signs, lane markings, or roadway design. But vehicular traffic, including vehicles turning right or left, shall yield the right-of-way to other vehicles, and to pedestrians lawfully within the intersection or an adjacent crosswalk, at the time such signal indication is exhibited.

2. Traffic, except pedestrians, facing a GREEN ARROW signal indication, shown alone or in combination with another signal indication, is permitted to cautiously enter the intersection only to make the movement indicated by such arrow, or such other movement as is permitted by other signal indications shown at the same time. Such vehicular traffic shall yield the right-of- way to pedestrians lawfully within an adjacent crosswalk and to other traffic lawfully using the intersection.

3. Unless otherwise directed by a pedestrian signal head, pedestrians facing any green signal indication, except when the sole green signal indication is a turn arrow, are permitted to proceed across the roadway within any marked or unmarked crosswalk. The pedestrian shall yield the right-of-way to vehicles lawfully within the intersection at the time that the green signal indication is first shown.

B. Steady yellow signal indications shall have the following meanings:

1. Traffic, except pedestrians, facing a steady CIRCULAR YELLOW or YELLOW ARROW signal indication is thereby warned that the related green movement is being terminated or that a red signal indication will be exhibited immediately thereafter when vehicular traffic shall not enter the intersection.

2. Pedestrians facing a steady CIRCULAR YELLOW or YELLOW ARROW signal indication, unless otherwise directed by a pedestrian signal head, are thereby advised that there is insufficient time to cross the roadway before a red signal indication is shown, and no pedestrian shall then start to cross the roadway.

C. Steady red signal indications shall have the following meanings:

1. Vehicular traffic facing a steady CIRCULAR RED signal indication alone shall stop at a clearly marked stop line, but if there is no stop line, traffic shall stop before entering the crosswalk on the near side of the intersection; or if there is no crosswalk, then before entering the intersection, and shall remain stopped until a signal indication to proceed is shown, or as provided below.

Except when a sign is in place prohibiting a turn on red or a RED ARROW signal indication is displayed, vehicular traffic facing a CIRCULAR RED signal indication is permitted to enter the intersection to turn right, or to turn left from a one-way street into a one-way street, after stopping. Such vehicular traffic shall yield the right-of-way to pedestrians lawfully within an adjacent crosswalk and to other traffic lawfully using the intersection.

2. Vehicular traffic facing a steady RED ARROW signal indication shall not enter the intersection to make the movement indicated by the arrow and, unless entering the intersection to make another movement permitted by another signal indication, shall stop at a clearly marked stop line; but if there is no stop line, before entering the crosswalk on the near side of the intersection, or if there is no crosswalk, then before entering the intersection, and shall remain stopped until a signal indication permitting the movement indicated by such RED ARROW is shown.

~~When an R10-17a sign (see Section 2B.45) is in place permitting a turn on a RED ARROW signal indication, vehicular traffic facing a RED ARROW signal indication is permitted to enter the intersection to turn right, or to turn left from a one-way street into a one-way street,~~

~~after stopping. Such vehicular traffic shall yield the right-of-way to pedestrians lawfully within an adjacent crosswalk and to other traffic lawfully using the intersection.~~ The R10-17a sign shall not be used in California. Turning on a steady red arrow is not permitted in California.

3. Unless otherwise directed by a pedestrian signal head, pedestrians facing a steady CIRCULAR RED or RED ARROW signal indication alone shall not enter the roadway.

D. Flashing signal indications shall have the following meanings:

1. Flashing yellow—When a yellow lens is illuminated with rapid intermittent flashes, vehicular traffic is permitted to proceed through the intersection or past such signal indication only with caution.

2. Flashing red—When a red lens is illuminated with rapid intermittent flashes, vehicular traffic shall stop at a clearly marked stop line; but if there is no stop line, traffic shall stop before entering the crosswalk on the near side of the intersection; or if there is no crosswalk, at the point nearest the intersecting roadway where the driver has a view of approaching traffic on the intersecting roadway before entering the intersection. The right to proceed shall be subject to the rules applicable after making a stop at a STOP sign.

3. Flashing RED ARROW and flashing YELLOW ARROW signal indications have the same meaning as the corresponding flashing circular signal indication, except that they apply only to vehicular traffic intending to make the movement indicated by the arrow.

Section 4D.05 <u>Application of Steady Signal Indications</u>

Standard:

When a traffic control signal is being operated in a steady (stop-and-go) mode, at least one lens in each signal face shall be illuminated at any given time.

A signal face(s) that controls a particular vehicular movement during any interval of a cycle shall control that same movement during all intervals of the cycle.

Steady signal indications shall be applied as follows:

A. A steady CIRCULAR RED signal indication:

1. Shall be displayed when it is intended to prohibit traffic, except pedestrians directed by a pedestrian signal head, from entering the intersection or other controlled area. Turning after stopping is permitted as stated in Item C.1 of Section 4D.04.

2. Shall be displayed with the appropriate GREEN ARROW signal indications when it is intended to permit traffic to make a specified turn or turns, and to prohibit traffic from proceeding straight ahead through the intersection or other controlled area, except in protected only mode turn signal faces, or in protected/permissive mode left-turn operation with separate left-turn signal faces (see Section 4D.06).

B. A steady CIRCULAR YELLOW signal indication:

1. Shall be displayed following a CIRCULAR GREEN or straight-through GREEN ARROW signal indication in the same signal face.

2. Shall not be displayed in conjunction with the change from the CIRCULAR RED signal indication to the CIRCULAR GREEN signal indication.

3. Shall be followed by a CIRCULAR RED signal indication except that, when entering preemption operation, the return to the previous CIRCULAR GREEN signal indication shall be permitted following a CIRCULAR YELLOW signal indication (see Section 4D.13).

4. Shall not be displayed to an approach from which drivers are turning left permissively unless one of the following conditions exists:

(a) A steady CIRCULAR YELLOW signal indication is also being shown simultaneously to the opposing approach;

(b) A separate left-turn signal face is provided and operated as described in Section 4D.06;

~~(c) An engineering study has determined that, because of unique intersection conditions, the conditions described in items (a) and (b) above cannot reasonably be implemented without causing significant operational or safety problems and that the volume of impacted left turning traffic is relatively low, and those left-turning drivers are advised that the opposing~~

~~**traffic is not simultaneously being shown a CIRCULAR YELLOW signal indication if this operation occurs continuously by the installation near the left-most signal head of a W25-1 sign (see Section 2C.39) with the legend ONCOMING TRAFFIC HAS EXTENDED GREEN; or**~~ W25-1 sign shall not be used in California.

~~**(d) Drivers are advised of the operation if it occurs only occasionally, such as during a preemption sequence or because of the skipping of actuated phases, by the installation near the left-most signal head of a W25-2 sign (see Section 2C.39) with the legend ONCOMING TRAFFIC MAY HAVE EXTENDED GREEN.**~~ W25-2 sign shall not be used in California.

C. A steady CIRCULAR GREEN signal indication shall be displayed only when it is intended to permit traffic to proceed in any direction that is lawful and practical.

D. A steady RED ARROW signal indication shall be displayed when it is intended to prohibit traffic, except pedestrians directed by a pedestrian signal head, from entering the intersection or other controlled area to make the indicated turn. Except as described in Item C.2 of Section 4D.04, turning on a steady RED ARROW signal indication shall not be permitted.

E. A steady YELLOW ARROW signal indication:

1. Shall be displayed in the same direction as a GREEN ARROW signal indication following a GREEN ARROW signal indication in the same signal face, unless:

(a) The GREEN ARROW signal indication and a CIRCULAR GREEN (or straight-through GREEN ARROW) signal indication terminate simultaneously in the same signal face, or

(b) The green arrow is a straight-through GREEN ARROW.

(c) There are two or more green arrow indications that terminate simultaneously in the same signal face. See Figure 4D-3(CA).

2. Shall not be displayed in conjunction with the change from a RED ARROW signal indication to a GREEN ARROW signal indication.

3. Shall not be displayed when any conflicting vehicular movement has a green or yellow signal indication or any conflicting pedestrian movement has a WALKING PERSON (symbolizing WALK) or flashing UPRAISED HAND (symbolizing DONT WALK) signal indication (see Section 4D.09).

4. Shall be terminated by a RED ARROW signal indication for the same direction or a CIRCULAR RED signal indication except:

(a) When entering preemption operation, the return to the previous GREEN ARROW signal indication shall be permitted following a YELLOW ARROW signal indication.

(b) When the movement controlled by the arrow is to continue on a permissive mode basis during an immediately following CIRCULAR GREEN signal indication.

F. A steady GREEN ARROW signal indication:

1. Shall be displayed only to allow vehicular movements, in the direction indicated, that are not in conflict with other vehicles moving on a green or yellow signal indication or with pedestrians crossing in conformance with a WALKING PERSON (symbolizing WALK) or flashing UPRAISED HAND (symbolizing DONT WALK) signal indication (see Section 4D.09).

2. Shall be displayed on a signal face that controls a left-turn movement when said movement is not in conflict with other vehicles moving on a green or yellow signal indication or with pedestrians crossing in conformance with a WALKING PERSON (symbolizing WALK) or flashing UPRAISED HAND (symbolizing DONT WALK) signal indication (see Section 4D.09).

3. Shall not be required on the stem of T-intersections or for turns from one-way streets.

Option:

Steady RED ARROW, YELLOW ARROW, and GREEN ARROW signal indications, if not otherwise prohibited, may be used instead of the corresponding circular signal indications at the following locations:

A. On an approach intersecting a one-way street;

B. Where certain movements are prohibited; and

C. Where certain movements are physically impossible.

~~If U-turns are permitted from the approach and if drivers making a right turn from the conflicting approach to the left are simultaneously being shown a right-turn GREEN ARROW signal indication, drivers making a U-turn may be advised of the operation by the installation near the left-turn signal face of a U-TURN YIELD TO RIGHT TURN (R10-16) sign (see Section 2B.45).~~

Standard:

When a RIGHT TURN ARROW controls the Right Turn movement, a conflicting U-turn approach shall be prohibited.

Section 4D.06 <u>Application of Steady Signal Indications for Left Turns</u>

Support:

Left-turning traffic is controlled by one of four modes as follows:

A. Permissive Only Mode—turns made on the CIRCULAR GREEN signal indication after yielding to oncoming traffic and pedestrians;
B. Protected Only Mode—turns made only when the left-turn GREEN ARROW signal indication is displayed;
C. Protected/Permissive Mode—both modes occur on an approach during the same cycle; or
D. Variable Left-Turn Mode—the operating mode changes among the protected only mode and/or the protected/permissive mode and/or the permissive only mode during different periods of the day.

Option:

In areas having a high percentage of elderly drivers, special consideration may be given to the use of protected only mode left-turn phasing, when appropriate.

Standard:

The required left-turn signal faces and operation for an approach shall be determined by the selected mode of left-turn operation, as follows:

A. Permissive Only Mode—The signal indications for permissive only mode left turns shall be provided by the signal faces controlling the through movement, or by a permissive-only left-turn signal face that is either a shared signal face or a separate signal face. A permissive-only shared signal face, regardless of where the permissive-only left-turn signal face is positioned and regardless of how many adjacent through signal faces are provided, shall always simultaneously display the same color of circular indication that the adjacent through signal face or faces display. A separate permissive-only left-turn signal face sometimes displays a different color of circular signal indication than the adjacent through signal faces display.

If a separate left-turn signal face is provided for permissive only left turns, it shall meet the following requirements:

1. During the permissive left-turn movement, the left-turn signal face shall display a CIRCULAR GREEN signal indication.
2. If the CIRCULAR GREEN and CIRCULAR YELLOW signal indications in the left-turn signal face are visibility-limited from the adjacent through movement, the left-turn signal face shall not be required to simultaneously display the same color of circular signal indication as the signal faces for the adjacent through movement.
3. If the CIRCULAR GREEN and CIRCULAR YELLOW signal indications in the left-turn signal face are visibility-limited from the adjacent through movement, the display of a CIRCULAR GREEN signal indication for a permissive left-turn movement while the signal faces for the adjacent through movement display CIRCULAR RED signal indications and the opposing left-turn signal faces display left-turn GREEN ARROW signal indications for a protected left-turn movement shall be permitted.
~~4. If the left-turn signal face does not simultaneously display the same color of circular signal indication as the signal faces for the adjacent through movement, a LEFT TURN YIELD ON GREEN (symbolic green ball) (R10-12) sign or a LEFT TURN SIGNAL—YIELD ON GREEN (symbolic green ball) (R10-21) sign (see Figure 2B-19) shall be used.~~

B. Protected Only Mode—The left-turn signal face shall be capable of displaying one of the following sets of signal indications:

1. Left-turn RED ARROW, YELLOW ARROW, and GREEN ARROW signal indications only. At least one left-turn signal face shall be provided in addition to the two approach signal faces required in Section 4D.15 for the major movement. Only one of the three colors shall be illuminated at any given time. A signal instruction sign shall not be required with this set of signal indications. If used, it shall be a LEFT ON GREEN ARROW ONLY sign (R10-5).

2. CIRCULAR RED, left-turn YELLOW ARROW, and left-turn GREEN ARROW signal indications. At least one left-turn signal face shall be provided in addition to the two approach signal faces required in Section 4D.15 for the major movement. Only one of the three colors shall be illuminated at any given time. Unless the CIRCULAR RED signal indication is shielded, hooded, louvered, positioned, or designed such that it is not readily visible to drivers in the through lane(s), a LEFT TURN SIGNAL sign (R10-10) shall be used.

3. CIRCULAR RED, CIRCULAR YELLOW, CIRCULAR GREEN, and left-turn GREEN ARROW signal indications. This four-section signal face shall be used only when the CIRCULAR GREEN and left-turn GREEN ARROW signal indications begin and terminate together. During each interval, the circular signal indication shall be the same color as the signal indication on the signal face(s) for the adjacent through traffic.

C. Protected/Permissive Mode—The signal indications for protected/permissive mode left turns shall be provided in either a shared signal face or a separate signal face. Any protected/permissive left-turn signal face that always simultaneously displays the same color of circular signal indication that the adjacent through signal faces display shall be considered to be a shared signal face, regardless of where the left-turn signal face is positioned and regardless of how many adjacent through signal faces are provided. Any protected/permissive left-turn signal face that sometimes displays a different color of circular signal indication than the adjacent through signal faces display shall be considered to be a separate signal face. The requirements for each type of signal face are as follows:

1. If a shared signal face is provided, it shall be considered an approach signal face, and shall meet the following requirements:

(a) During the protected left-turn movement, the signal face shall simultaneously display a left-turn GREEN ARROW signal indication and a circular signal indication that is the same color as the signal indication for the adjacent through lane on the same approach as the protected left turn.
During the protected left-turn movement, the signal faces for through traffic on the opposing approach shall simultaneously display CIRCULAR RED signal indications.

(b) During the permissive left-turn movement, all signal faces on the approach shall display CIRCULAR GREEN signal indications.

(c) All signal faces on the approach shall simultaneously display the same color of circular signal indications to both through and left-turn road users.

(d) A supplementary sign shall not be required. If used, it shall be a LEFT TURN YIELD ON GREEN (symbolic green ball) (R10-12) sign (see Figure 2B-19).

2. If a separate signal face is provided, it shall be considered a left-turn signal face, and shall meet the following requirements:

(a) During the protected left-turn movement, the left-turn signal face shall display a left-turn GREEN ARROW signal indication.
During the protected left-turn movement, the signal faces for through traffic on the opposing approach shall simultaneously display CIRCULAR RED signal indications.

(b) During the permissive left-turn movement, the left-turn signal face shall display a CIRCULAR GREEN signal indication.

(c) If the CIRCULAR GREEN and CIRCULAR YELLOW signal indications in the left-turn signal face are visibility-limited from the adjacent through movement, the left-turn signal

face shall not be required to simultaneously display the same color of circular signal indication as the signal faces for the adjacent through movement.

(d) If the CIRCULAR GREEN and CIRCULAR YELLOW signal indications in the left-turn signal face are visibility-limited from the adjacent through movement, the display of a CIRCULAR GREEN signal indication for a permissive left-turn movement while the signal faces for the adjacent through movement display CIRCULAR RED signal indications and the opposing left-turn signal face displays a left-turn GREEN ARROW for a protected left-turn movement shall be permitted.

(e) If the left-turn signal face does not simultaneously display the same color of circular signal indication as the signal faces for the adjacent through movement, a LEFT TURN SIGNAL—YIELD ON GREEN (symbolic green ball) (R10-21) sign (see Figure 2B-19) shall be used.

D. Variable Left-Turn Mode—If the protected only mode occurs during one or more periods of the day, and the permissive only mode or the combined protected/permissive mode occurs during other periods of the day, the requirements of Items A, B, and C in this Standard that are appropriate to that mode of operation shall be met, subject to the following:

1. The CIRCULAR GREEN and CIRCULAR YELLOW signal indications shall not be displayed when operating in the protected only mode.

2. The left-turn GREEN ARROW and left-turn YELLOW ARROW signal indications shall not be displayed when operating in the permissive only mode.

Option:

Additional appropriate signal indications or changeable message signs may be used to meet the requirements for the variable left-turn mode.

Guidance:

Since separate signal phases for protected left turns will reduce the green time available for other phases, alternate means of handling left turn conflicts should be considered first.

Support:

The most likely possibilities are:

1. Prohibition of left turns. This can be done only if there are convenient alternate means of making the movement. Typical alternate means are:
   a. A series of right and/or left turns around a block to permit getting to the desired destination; or
   b. Making the left turn at an adjacent unsignalized intersection during gaps in the opposing through traffic.
2. Geometric changes to eliminate the left turn. An effective change would be a complete separation or a complete or partial "clover leaf" at grade. Any of these, while eliminating left turns, requires additional cost and right of way.
3. Provide protected-permissive or permissive-protected left turn operation. The protected left turn interval may be prohibited during certain periods of the day to allow only permissive intervals for left turn movement in order to increase the green time available for other phases. Refer to Section 4D.112(CA) for the requirements of protected-permissive or permissive-protected left turn operation.

Guidance:

Protected left turn phases should be considered where such alternatives couldn't be utilized, and one or more of the following conditions exist:

1. Collisions - Five or more left turn collisions for a particular left turn movement during a recent 12-month period.
2. Delay - Left-turn delay of one or more vehicles, which were waiting at the beginning of the green interval and are still remaining in the left turn lane after at least 80% of the total number of cycles for one hour.
3. Volume - At new intersections where only estimated volumes are available, the following criteria may be used. For pretimed signal or a background-cycle-controlled actuated signal, a left turn volume of more than two vehicles per approach per cycle for a peak hour; or for a traffic-actuated signal, 50 or more left turning vehicles per hour in one direction with the product of the turning and conflicting through traffic during the peak hour of 100,000 or more.
4. Miscellaneous. Other factors that might be considered include but are not limited to: impaired sight distance due to horizontal or vertical curvature, or where there are a large percentage of buses and trucks.

Section 4D.07 <u>Application of Steady Signal Indications for Right Turns</u>

Support:

Right-turning traffic is controlled by one of four modes as follows:

A. Permissive Only Mode—turns made on the CIRCULAR GREEN signal indication after yielding to pedestrians.

B. Protected Only Mode—turns made only when the right-turn GREEN ARROW signal indication is displayed.

C. Protected/Permissive Mode—both modes occur on an approach during the same cycle.

D. Variable Right-Turn Mode—the operating mode changes among the protected only mode and/or the protected/permissive mode and/or the permissive only mode during different periods of the day.

Standard:

The required right-turn signal faces and operation for an approach shall be determined by the selected mode of right-turn operation, as follows:

A. Permissive Only Mode—A separate signal indication or signal face for right turns shall not be required. The signal indication for permissive only mode right turns shall be the same color as the signal indication for adjacent through traffic, except that if the right turn is held to provide an exclusive pedestrian movement, a separate right-turn RED ARROW signal indication shall be provided.

B. Protected Only Mode—The right-turn signal face shall be capable of displaying one of the following sets of signal indications:

1. Right-turn RED ARROW, YELLOW ARROW, and GREEN ARROW signal indications only. At least one right-turn signal face shall be provided in addition to the two approach signal faces required in Section 4D.15 for the major movement. Only one of the three colors shall be illuminated at any given time. A signal instruction sign shall not be required with this set of signal indications. If used, it shall be a RIGHT ON GREEN ARROW ONLY sign (R10-5a).

2. CIRCULAR RED, right-turn YELLOW ARROW, and right-turn GREEN ARROW signal indications. At least one right-turn signal face shall be provided in addition to the two approach signal faces required in Section 4D.15 for the major movement. Only one of three colors shall be illuminated at any given time. Unless the CIRCULAR RED signal indication is shielded, hooded, louvered, positioned, or designed such that it is not readily visible to drivers in the through lane(s), a RIGHT TURN SIGNAL sign (R10-10R) shall be used.

3. CIRCULAR RED, CIRCULAR YELLOW, CIRCULAR GREEN, and right-turn GREEN ARROW signal indications. This four-section signal face shall be used only when the CIRCULAR GREEN and right-turn GREEN ARROW signal indications begin and terminate together. During each interval, the circular signal indication shall be the same color as the signal indication on the signal faces for the adjacent through traffic.

C. Protected/Permissive Mode—A separate signal face is not required for the right turn, but, if provided, it shall be considered an approach signal face, and shall meet the following requirements:

1. During the protected right-turn movement, the signal face shall simultaneously display:

(a) A right-turn GREEN ARROW signal indication, and

(b) A circular signal indication that is the same color as the signal indication for the adjacent through lane on the same approach as the protected right turn.

2. During the permissive right-turn movement, all signal faces on the approach shall display a CIRCULAR GREEN signal indication.

3. All signal faces on the approach shall simultaneously display the same color of circular signal indications to both through and right-turn road users.

D. Variable Right-Turn Mode—If the protected only mode occurs during one or more periods of the day, and the permissive only mode or the combined protected/permissive mode occurs

during other periods of the day, the requirements of Items A, B, and C in this Standard that are appropriate to that mode of operation shall be met subject to the following:

1. The CIRCULAR GREEN and CIRCULAR YELLOW signal indications shall not be displayed when operating in the protected only mode.

2. The right-turn GREEN ARROW and right-turn YELLOW ARROW signal indications shall not be displayed when operating in the permissive only mode.

Option:

Additional appropriate signal indications or changeable message signs may be used to meet the requirements for the variable right-turn mode.

Guidance:

A right-turn green arrow should be considered for use only when there is an exclusive right-turn lane or it is the only movement that traffic is permitted to make or when the right-turn volume exceeds 200 vehicles per hour.

Section 4D.08 <u>Prohibited Steady Signal Indications</u>

Standard:

The following combinations of signal indications shall not be simultaneously displayed on any one signal face:

A. CIRCULAR GREEN with CIRCULAR YELLOW.

B. CIRCULAR RED with CIRCULAR YELLOW.

C. CIRCULAR GREEN with CIRCULAR RED.

D. Straight-through GREEN ARROW with CIRCULAR RED.

The above combinations shall not be simultaneously displayed in different signal faces on any one approach unless one of the following conditions exists:

A. One of the signal faces is a turn signal controlling a protected only mode turn, and a LEFT (RIGHT) TURN SIGNAL sign (R10-10) (see Sections 4D.06 and 4D.07) is mounted adjacent to each such signal face, or

B. The signal faces are shielded, hooded, louvered, positioned, or designed so that the combination is not confusing to approaching road users.

A straight-through RED ARROW signal indication or a straight-through YELLOW ARROW signal indication shall not be displayed on any signal face, either alone or in combination with any other signal indication.

Section 4D.09 <u>Unexpected Conflicts During Green or Yellow Intervals</u>

Standard:

A steady GREEN ARROW or YELLOW ARROW signal indication shall not be displayed to vehicular movements that are in conflict with the following:

A. Other vehicles moving on a green or yellow signal indication.~~, except for the situation regarding U-turns described in Section 4D.05.~~ Vehicles departing in the same direction shall not be considered in conflict if, for each turn lane with moving traffic, there is a separate departing lane, and pavement markings or raised channelization clearly indicate which departure lane to use.

B. Pedestrians crossing in conformance with a WALKING PERSON (symbolizing WALK) or flashing UPRAISED HAND (symbolizing DONT WALK) signal indication.

Guidance:

No movement that creates an unexpected crossing of pathways of moving vehicles or pedestrians should be allowed during any green or yellow interval, except when all three of the following conditions are met:

A. The movement involves only slight conflict, and

B. Serious traffic delays are substantially reduced by permitting the conflicting movement, and

C. Drivers and pedestrians subjected to the unexpected conflict are effectively warned thereof by a sign.

Section 4D.10 <u>Yellow Change and Red Clearance Intervals</u>

Standard:

A yellow signal indication shall be displayed following every CIRCULAR GREEN or GREEN ARROW signal indication.

The exclusive function of the yellow change interval shall be to warn traffic of an impending change in the right-of-way assignment.

The duration of a yellow change interval shall be predetermined.

Guidance:

A yellow change interval should have a duration of approximately 3 to 6 seconds. The longer intervals should be reserved for use on approaches with higher speeds.

Option:

The yellow change interval may be followed by a red clearance interval to provide additional time before conflicting traffic movements, including pedestrians, are released.

Support:

The purpose of the yellow signal indication is to warn traffic approaching a traffic signal that the related green movement is ending or that a steady red indication will be exhibited immediately thereafter and traffic will be required to stop when the red signal is exhibited.

Standard:

The minimum yellow light change interval shall be in accordance with Table 4D-102(CA). The posted speed limit, or the prima facie speed limit established by the California Vehicle Code (CVC) shall be used for determination of the minimum yellow light change interval for the through traffic movement.

The minimum yellow light change interval for a protected left-turn or protected right-turn phase shall be 3.0 seconds.

Option:

The minimum yellow light change interval for the through movement and the protected left-turn or protected right-turn may be increased based on a field review or by using appropriate judgment. That judgment may be based on numerous factors, including, but not limited to, 85th percentile speed, intersection geometry and field observation of traffic behavior.

Standard:

The duration of a red clearance interval shall be predetermined.

Guidance:

A red clearance interval should have a duration not exceeding 6 seconds.

Support:

When used, red clearance intervals normally range from 0.1 to 2.0 seconds.

Section 4D.11 <u>Application of Flashing Signal Indications</u>

Standard:

The light source of a flashing signal indication shall be flashed continuously at a rate of not less than 50 nor more than 60 times per minute. The illuminated period of each flash shall be not less than half and not more than two-thirds of the total flash cycle.

Flashing signal indications shall comply with the requirements of other Sections of this Manual regarding shielding or positioning of conflicting signal indications, except that flashing yellow signal indications for through traffic shall not be required to be shielded or positioned to prevent visual conflict for road users in separately controlled turn lanes.

The following applications shall apply whenever a traffic control signal is operated in the flashing mode:

A. Each approach or protected only mode turn movement that is controlled during steady mode (stop-and-go) operation shall display a signal indication during flashing operation.

B. All signal faces that are flashed on an approach shall flash the same color, either yellow or red, except that separate signal faces for protected only mode turn movements and separate signal faces for protected/permissive left-turn movements shall be permitted to flash a CIRCULAR RED or RED ARROW signal indication when the through signal indications are flashed yellow.

Shared signal faces for protected/permissive left-turn movements shall not be permitted to flash a CIRCULAR RED signal indication when the through signal indications are flashed yellow.

C. The appropriate RED ARROW or YELLOW ARROW signal indication shall be flashed when a signal face consists entirely of arrow lenses.

D. If a signal face includes both circular and arrow signal lenses of the color that is to be flashed, only the circular signal indication shall be flashed.

Guidance:

When a traffic control signal is operated in the flashing mode, a flashing yellow signal indication should be used for the major street and a flashing red signal indication should be used for the other approaches unless flashing red signal indications are used on all approaches.

Section 4D.12 <u>Flashing Operation of Traffic Control Signals</u>

Standard:

Each traffic control signal shall be provided with an independent flasher mechanism that operates in compliance with Section 4D.11. The flashing operation shall not be terminated by removal or turn off of the controller unit or of the conflict monitor (malfunction management unit) or both.

When a traffic control signal is operated in the flashing mode:

A. Flashing yellow signal indications shall not be displayed for approaches with conflicting traffic movements, except for permissive left-turn movements.

B. At least one signal indication in each signal face on an approach shall be flashed except in the following circumstance:
A single-section signal face consisting of a continuously-illuminated GREEN ARROW signal lens that is used alone to indicate a continuous movement in the steady (stop-and-go) mode shall remain continuously illuminated when the traffic control signal is operated in the flashing mode.

A manual switch, a conflict monitor (malfunction management unit) circuit, and, if appropriate, automatic means shall be provided to initiate the flashing mode.

The transition from steady (stop-and-go) mode to flashing mode, if initiated by a conflict monitor (malfunction management unit) or by a manual switch, shall be permitted to be made at any time.

Programmed changes from steady (stop-and-go) mode to flashing mode shall be made under either of the following circumstances:

A. At the end of the common major-street red interval (such as just prior to the start of the green in both directions on the major street), or

B. Directly from a steady CIRCULAR GREEN or GREEN ARROW signal indication to a flashing CIRCULAR YELLOW or YELLOW ARROW signal indication, respectively.

During programmed changes, no steady green signal indication or flashing yellow signal indication shall be terminated and immediately followed by a steady red or flashing red signal indication without first displaying the steady yellow signal indication.

Changes from flashing mode to steady (stop-and-go) mode shall be made under one of the following procedures:

A. Yellow-red flashing mode: Changes from flashing mode to steady (stop-and-go) mode shall be made at the beginning of the major-street green interval (when a green signal indication is shown to through traffic in both directions on the major street), or if there is no common major-street green interval, at the beginning of the green interval for the major traffic movement on the major street.

B. Red-red flashing mode: Changes from flashing mode to steady (stop-and-go) mode shall be made by changing the flashing red indications to steady red indications followed by appropriate green indications to begin the steady mode cycle. These green indications shall be the beginning of the major-street green interval (when a green signal indication is shown to through traffic in both directions on the major street) or if there is no common major-street green interval, at the beginning of the green interval for the major traffic movement on the major street.

Guidance:

When changing from the yellow-red flashing mode to steady (stop-and-go) mode, if there is no common major-street green interval, the provision of a steady red clearance interval for the other approaches before changing from a flashing yellow or a flashing red signal indication to a green signal indication on the major approach should be considered.

The steady red clearance interval provided during the change from red-red flashing mode to steady (stop-and- go) mode should have a duration of 6 seconds.

Support:

Section 4E.09 contains information regarding the operation of accessible pedestrian signal detector pushbutton locator tones during flashing operation.

Section 4D.13 Preemption and Priority Control of Traffic Control Signals

Option:

Traffic control signals may be designed and operated to respond to certain classes of approaching vehicles by altering the normal signal timing and phasing plan(s) during the approach and passage of those vehicles. The alternative plan(s) may be as simple as extending a currently displayed green interval or as complex as replacing the entire set of signal phases and timing.

Support:

Preemption control (see definition in Section 4A.02) is typically given to trains, boats, emergency vehicles, and light rail ~~transit~~ vehicles.

Examples of preemption control include the following:

A. The prompt displaying of green signal indications at signalized locations ahead of fire vehicles, law enforcement vehicles, ambulances, and other official emergency vehicles;

B. A special sequence of signal phases and timing to provide additional clearance time for vehicles to clear the tracks prior to the arrival of a train or light rail transit vehicle; and

C. A special sequence of signal phases to display a steady red indication to prohibit ~~turning~~ all movements towards the tracks during the approach or passage of a train or transit vehicle.

Priority control (see definition in Section 4A.02) is typically given to certain non-emergency vehicles such as buses and light-rail vehicles.

Examples of priority control include the following:

A. The displaying of early or extended green signal indications at an intersection to assist public transit vehicles in remaining on schedule; and

B. Special phasing to assist public transit vehicles in entering the travel stream ahead of the platoon of traffic.

Some types or classes of vehicles supersede others when a traffic control signal responds to more than one type or class. In general, a vehicle that is more difficult to control supersedes a vehicle that is easier to control. Typically, the order of priority is: train, boat, heavy vehicle (fire vehicle, emergency medical service), light vehicle (law enforcement), light rail transit, rubber-tired transit.

Standard:

During the transition into preemption control:

A. The yellow change interval, and any red clearance interval that follows, shall not be shortened or omitted.

B. The shortening or omission of any pedestrian walk interval and/or pedestrian change interval shall be permitted.

C. The return to the previous steady green signal indication shall be permitted following a steady yellow signal indication in the same signal face, omitting the red clearance interval, if any.

During preemption control and during the transition out of preemption control:

A. The shortening or omission of any yellow change interval, and of any red clearance interval that follows, shall not be permitted.

B. A signal indication sequence from a steady yellow signal indication to a steady green signal indication shall not be permitted.

During priority control and during the transition into or out of priority control:

A. The shortening or omission of any yellow change interval, and of any red clearance interval that follows, shall not be permitted.

B. The shortening of any pedestrian walk interval below that time described in Section 4E.10 shall not be permitted.

C. The omission of a pedestrian walk interval and its associated change interval shall not be permitted unless the associated vehicular phase is also omitted or the pedestrian phase is exclusive.

D. The shortening or omission of any pedestrian change interval shall not be permitted.

E. A signal indication sequence from a steady yellow signal indication to a steady green signal indication shall not be permitted.

Guidance:

When a traffic control signal that is returning to a steady mode from a dark mode (typically upon restoration from a power failure) receives a preemption or priority request, care should be exercised to minimize the possibility of vehicles or pedestrians being misdirected into a conflict with the vehicle making the request.

If a traffic control signal is installed near or within a highway-railroad grade crossing or if a highway-railroad grade crossing with active traffic control devices is within or near a signalized highway intersection, Chapter 8D should be consulted.

Traffic control signals operating under preemption control or under priority control should be operated in a manner designed to keep traffic moving.

Traffic control signals that are designed to respond under preemption or priority control to more than one type or class of vehicle should be designed to respond in the relative order of importance or difficulty in stopping the type or class of vehicle.

Option:

During the change from a dark mode to a steady mode under a preemption or priority request, the display of signal indications that could misdirect road users may be prevented by the following:

A. Having the traffic control signal remain in the dark mode;

B. Having the traffic control signal remain in the flashing mode;

C. Altering the flashing mode;

D. Executing the normal start-up routine before responding; and

E. Responding directly to initial or dwell period.

A distinctive indication may be provided at the intersection to show that an emergency vehicle has been given control of the traffic control signal (see Section 11-106 of the "Uniform Vehicle Code").

Preemption or priority control of traffic control signals may also be a means of assigning priority right-of-way to specified classes of vehicles at certain non-intersection locations such as on approaches to one-lane bridges and tunnels, movable bridges, highway maintenance and construction activities, metered freeway entrance ramps, and transit operations.

Guidance:

Traffic control signals within 60 m (200 ft) of a highway-rail crossing should be operated during railroad pre-emption in a manner that minimizes delay and potential conflicts. These alternatives include steady all-red, all-red flash, limited service or special sequential signal phasing.

Option:

Extinguishable or changeable message regulatory signs and/or appropriate red traffic control signal indications that are visible only during railroad or light rail transit pre-emption may be used to prohibit movements from a signalized location toward a highway-rail crossing. Examples of applicable regulatory signs that may be used in a extinguishable format include the R3-1, R3-2 and R5-1 signs.

Support:

Left turns from a nearby signalized intersection toward a highway-rail crossing can be prohibited during railroad or light rail transit pre-emption by use of a red-left arrow display or an extinguishable R3-2 sign. Likewise, right turns from a nearby signalized intersection toward such a crossing can be prohibited by use of a red right arrow display or a extinguishable R3-1 sign. Through movements from a nearby signalized intersection toward a highway-rail crossing can be prohibited by a circular red display or an extinguishable R5-1 sign.

Where the highway-rail crossing impacts two streets near a signalized intersection, then steady all red operation may be appropriate during railroad or light rail transit pre-emption.

Where the typical pre-emption period tends to be short, such as for light rail vehicles or commuter trains, a single pre-emption signal phase that serves some vehicular movements and prohibits others may be appropriate. So-called "limited-service" operation, which provides a steady circular green to traffic except for the movements that approach the highway-rail crossing, is one such example.

Where the pre-emption period tends to be long, such as for some freight train movements, all-red flash or special sequential phases that alternate among movements that do not approach the highway-rail crossing, possibly in combination with extinguishable signs, may be appropriate to provide alternating right-of-way.

Where there are exclusive turn lanes that accommodate turns toward the highway-rail crossing, then it becomes practical to prohibit those moves during railroad pre-emption.

Where exclusive turn lanes or special sequential phases are not feasible, then all-red flash may be desirable to allow movements to be made after motorists stop to assess the railroad or light rail transit pre-emption operation.

The desirability of prohibiting movements toward the highway-rail crossing during railroad or light rail transit pre-emption increases as:

1) the distance between the signalized intersection and the highway-rail crossing decreases; and,
2) the volume that likely would enter increases.

Railroad Preemption

Support:

Railroad preemption results in a special traffic signal operation depending on the relation of the railroad tracks to the intersection, the number of phases in the traffic signal and other traffic conditions. Railroad preemption is normally initiated by a notification from the railroad grade crossing warning equipment.

Guidance:

Typical circumstances where railroad preemption is required and the following type of signal operation should be provided during preemption:

1. Where a railroad grade crossing, provided with grade crossing warning equipment, is within 60 m (200 ft) of a signalized intersection, preemption of the traffic signal should provide the following sequence of operation:
   a. A yellow change interval and any required red clearance interval for any signal phase that is green or yellow when preemption is initiated and which will be red during the track clearance interval. The length of yellow change and red clearance intervals shall not be altered by preemption. Phases, which are in the green interval when preemption is initiated, and which will be green during the track clearance interval, shall remain green. Any pedestrian walk or clearance interval, in effect when preemption is initiated, shall immediately be terminated and all pedestrian signal faces shall display steady UPRAISED HAND.
   b. A track clearance interval for the signal phase or phases controlling the approach that crosses the railroad tracks. The signal indication for the clearance interval may be either green or flashing red.
   c. A yellow change interval if green signal indications were provided during the track clearance interval.
   d. Depending on traffic requirements and phasing of the traffic signal controller, the traffic signal may then do one of the following:
      (1) Go into flashing operation, with flashing red or flashing yellow indications for the approaches parallel to the railroad tracks and flashing red indications for all other approaches. Pedestrian signals shall be extinguished. If flashing red is used for all approaches, an all-red or other clearance interval shall be provided prior to returning to normal operation.
      (2) Revert to limited operation with those signal indications controlling through and left turn approaches towards the railroad tracks displaying steady red. Permitted pedestrian signal phases shall operate normally. This operation shall be used only if the grade crossing warning equipment includes gates.
   e. The traffic signal shall return to normal operation following release of preemption control.
2. Where the railroad tracks run within a roadway and train speeds exceed 16 km/h (10 mph), preemption of the traffic signal should provide the following sequence of operation.
   a. A yellow change interval and any required red clearance interval for all signal phases that are green or yellow when preemption is initiated and which will be red during the preemption period. The length of yellow change and red clearance intervals shall not be altered by preemption. Phases, which are in the green interval when preemption is initiated, and which will be green during the preemption period, shall

remain green. Any walk or pedestrian clearance intervals in effect when preemption is initiated shall be immediately terminated and all pedestrian signal faces shall display UPRAISED HAND.

b. All signal faces controlling traffic movements parallel to the railroad tracks will display green or flashing yellow indications. All other vehicle signal faces will display steady red indications; pedestrian signal faces will display UPRAISED HAND.

3. Where the railroad tracks run along a roadway of a signalized intersection and train speeds do not exceed 16 km/h (10 mph), trains may be controlled by the vehicle signal indications. This type of train control requires approval from the railroad, the Public Utilities Commission and the Director of Transportation.
4. Unusual or unique track or roadway configurations may require other solutions than those described above.

Emergency Vehicle Preemption

Option:

Authorized emergency vehicles may preempt traffic signals. The purpose of such preemption is to provide the right of way to the emergency vehicle as soon as practical. The preemption may be controlled by one of the following means:

1. By direct wire, modulated light or radio from a remote location such as a fire house; and
2. By modulated light or radio from an emergency vehicle.

Guidance:

Emergency vehicle equipment should be capable of encoding IDs.

Emergency vehicle preemption should provide the following sequence of operation:

1. A yellow change interval and any required red clearance interval for any signal phase that is green or yellow when preemption is initiated and which will be red during the preemption interval. The length of the yellow change and red clearance intervals shall not be altered by preemption. Phases, which are in the green interval when preemption is initiated, and which will be green during the preemption period shall remain green. Any pedestrian walk interval in effect when preemption is initiated shall be immediately terminated. The normal pedestrian clearance interval may be abbreviated.

Standard:

2. An all-red intersection preemption display shall not be used.
3. The traffic signal shall return to normal operation upon termination of the demand for preemption or the termination of the assured green interval.

At a traffic signal provided with both emergency vehicle preemption and railroad preemption, the railroad preemption shall have priority. In the event of a demand for an emergency vehicle preemption during the time that the intersection is operating on railroad preemption, the railroad preemption sequence shall continue unaffected until completion. In the event of a demand for railroad preemption during emergency vehicle preemption operation, railroad preemption shall immediately assume control of the intersection.

When control of emergency vehicle preemption is by means of a radio or modulated light source, the following shall apply:

1. The transmitter shall be permanently mounted on the emergency vehicle or building and shall operate at a range sufficient to permit a normal yellow change interval and any required clearance intervals to take place prior to the arrival of the emergency vehicle. The normal pedestrian clearance interval may be abbreviated.
2. The preemption system may provide an indication (such as a special signal) to the driver of an emergency vehicle that preemption of the traffic signal has been effected. If a special signal light is used, the color shall not be red, yellow, or green.
3. The system shall be designed to prevent simultaneous preemption by two or more emergency vehicles on separate approaches to the intersection.

When performed by a local agency, the installation of emergency vehicle preemption equipment shall be covered by an Encroachment Permit issued by the Department of Transportation's District Director.

The permit shall state the applicable requirements from those listed above and the following:

1. It should be understood that the permit for the installation might be revoked or changed as deemed advisable or necessary by the Department of Transportation.

2. The programming of the preemption equipment shall be as approved in advance by the Department of Transportation and shall not be changed without written permission. The Permittee shall make any changes in programming, requested by the Department of Transportation.
3. The Permittee shall assume all liability for the claims, which arise due to or because of the permit.

Support:

Normally emergency vehicle preemption equipment is installed, operated, and maintained at no cost to the State. An exception is where the equipment is installed for use by vehicles of another State agency.

Standard:

The State shall maintain the preemption equipment at the traffic signal when the signal is maintained by the State. The costs of such maintenance shall be at 100% local agency expense.

Bus/Transit Vehicle Priority

Support:

The requirements for bus/transit vehicle priority insofar as installation, encroachment permit, maintenance and funding are the same as stated above for emergency vehicle preemption.

Standard:

The equipment and operation requirements for bus/transit vehicle priority shall be similar to those above for emergency vehicle priority. Some exceptions to these requirements are:

1. Equipment requirements for the transmitter are set forth in CVC Section 25352.
2. Any pedestrian interval in effect when priority is initiated shall not have its timing affected.

Guidance:

3. Normally, bus/transit priority should not occur more than once every other signal cycle.

Section 4D.14 Coordination of Traffic Control Signals

Guidance:

Traffic control signals within 800 m (0.5 mi) of one another along a major route or in a network of intersecting major routes should be coordinated, preferably with interconnected controller units. However, signal coordination need not be maintained across boundaries between signal systems that operate on different cycle lengths.

Support:

For coordination with railroad-highway grade crossing signals, see Sections 4D.13 and 8D.07.

Section 4D.15 Size, Number, and Location of Signal Faces by Approach

Support:

Sections 4D.05, and 4D.16 through 4D.18 contain additional information regarding the design of signal faces.

Standard:

There shall be two nominal diameter sizes for vehicular signal lenses: 200 mm (8 in) and 300 mm (12 in).

Three-hundred millimeter (12 in) signal lenses shall be used:

A. For signal indications for approaches (see definition in Section 4A.02) where road users view both traffic control and lane-use control signal heads simultaneously;

B. If the nearest signal face is between 35 m (120 ft) and 45 m (150 ft) beyond the stop line, unless a supplemental near-side signal face is provided;

C. For signal faces located more than 45 m (150 ft) from the stop line;

D. For approaches to all signalized locations for which the minimum sight distance in Table 4D-1 cannot be met; and

E. For arrow signal indications.

F. For mast-arm mounted, span-wire mounted and signal bridge mounted indications.

A 200 mm (8 in) signal lens for a CIRCULAR RED signal indication shall not be used in combination with a 300 mm (12 in) signal lens for a CIRCULAR GREEN signal indication or a 300 mm (12 in) signal lens for a CIRCULAR YELLOW signal indication.

Option:

Different sizes of signal lenses may be used in the same signal face or signal head, except for the prohibitions listed in the Standards in this Section.

Guidance:

Three-hundred millimeter (12 in) signal lenses should be used for all signal indications for the following:

A. Approaches with 85th-percentile approach speeds exceeding 60 km/h (40 mph);

B. Approaches where a traffic control signal might be unexpected;

C. All approaches without curbs and gutters where only post-mounted signal heads are used; and

D. Locations where there is a significant percentage of elderly drivers.

Standard:

The signal faces for each approach to an intersection or a midblock location shall be provided as follows:

A. A minimum of two signal faces shall be provided for the major movement on the approach, even if the major movement is a turning movement.

B. See Section 4D.06 for left-turn signal faces.

C. See Section 4D.07 for right-turn signal faces.

D. Except where the width of an intersecting roadway or other conditions make it physically impractical:

1. A signal face installed to satisfy the requirements for left-turn signal faces (see Section 4D.06) and right-turn signal faces (see Section 4D.07), and at least one and preferably both of the two signal faces required for the major movement on the approach shall be located:

(a) Not less than 12 m (40 ft) beyond the stop line.

(b) Not more than 55 m (180 ft) beyond the stop line unless a supplemental near side signal face is provided.

(c) As near as practical to the line of the driver's normal view, if mounted over the roadway.

2. Where the nearest signal face is located between 45 and 55 m (150 and 180 ft) beyond the stop line, engineering judgment of the conditions, including the worst-case visibility conditions, shall be used to determine if the provision of a supplemental near side signal face would be beneficial.

3. A signal face installed to satisfy the requirements for left-turn signal faces (see Section 4D.06) and right-turn signal faces (see Section 4D.07), and at least one and preferably both of the two signal faces required for the major movement on the approach shall be located no higher than at a maximum height to the top of the signal housing mounted over a roadway of 7.8 m (25.6 ft) above the pavement (see Section 4D.17). For viewing distances between 12 m (40 ft) and 16 m (53 ft) from the stop line, the maximum mounting height to the top of the signal housing shall be as shown on Figure 4D-1. (See Section 4D.17 for additional information regarding mounting heights.)

4. At least one and preferably both of the signal faces required by Item A in this Standard shall be located between two lines intersecting with the center of the approach at a point 3 m (10 ft) behind the stop line, one making an angle of approximately 20 degrees to the right of the center of the approach extended, and the other making an angle of approximately 20 degrees to the left of the center of the approach extended (see Figure 4D-2)

5. If both of the signal faces required by Item A in this Standard are post-mounted, they shall both be on the far side of the intersection, one on the right and one on the left of the approach lane(s).

E. If the minimum sight distance in Table 4D-1 cannot be met, a sign shall be installed to warn approaching traffic of the traffic control signal.

F. Required signal faces for through traffic on any one approach shall be located not less than 2.4 m (8 ft) apart measured horizontally perpendicular to the approach between the centers of the signal faces.

G. If more than one turn signal face is provided for a protected-mode turn and if one or both of the signal faces are located over the roadway, the signal faces shall be located not less than 2.4 m (8

ft) apart measured horizontally perpendicular to the approach between the centers of the signal faces.

H. If supplemental signal faces are used, the following limitations shall apply:

1. Left-turn arrows shall not be used in near-right signal faces.

2. Right-turn arrows shall not be used in far-left signal faces. A far-side median-mounted signal face shall be considered a far-left signal for this application.

Guidance:

The two signal faces required for each approach should be continuously visible to traffic approaching the traffic control signal, from a point at least the minimum sight distance indicated in Table 4D-1 in advance of and measured to the stop line. This range of continuous visibility should be provided unless precluded by a physical obstruction or unless another signalized location is within this range.

If two or more left-turn lanes are provided for a separately controlled protected only mode left-turn movement, or if a left-turn movement represents the major movement from an approach, two left-turn signal faces should be provided.

If two or more right-turn lanes are provided for a separately controlled right-turn movement, or if a right-turn movement represents the major movement from an approach, two right-turn signal faces should be provided.

Near-side signal faces should be located as near as practical to the stop line.

If a signal face controls a specific lane or lanes of an approach, its position should make it readily visible to road users making that movement.

Supplemental signal faces should be used if engineering judgment has shown that they are needed to achieve intersection visibility both in advance and immediately before the signalized location. If supplemental signal faces are used, they should be located to provide optimum visibility for the movement to be controlled.

At signalized mid-block crosswalks, at least one of the signal faces should be over the traveled way for each approach.

Option:

If a sign is installed to warn approaching road users of the traffic control signal, the sign may be supplemented by a Warning Beacon (see Section 4K.03).

A Warning Beacon used in this manner may be interconnected with the traffic signal controller assembly in such a manner as to flash yellow during the period when road users passing this beacon at the legal speed for the roadway might encounter a red signal indication (or a queue resulting from the display of the red signal indication) upon arrival at the signalized location.

Standard:

There shall be at least two signal faces for each movement on each signal-controlled approach.

Guidance:

Supplemental signal faces should be considered if any of the following conditions exist:

1. The area is rural.
2. The area is urban and the signal is the first one on a particular highway.
3. The roadway is striped for two or more approach lanes.
4. Where visibility of the signal is affected by alignment or obstructions.

Support:

On an undivided roadway, the signal faces for each through approach of an intersection are usually placed at the far right and far left corners.

Option:

The signal faces for two or more approaches may be combined on a single standard.

Support:

However, it is generally desirable to locate the signal faces on separate standards at curb returns. This practice will tend to maximize the visibility of the signal faces for the controlled approach while minimizing the visibility of the signal faces intended for the cross-street approach.

Guidance:

Separate standards should be considered whenever the curb return radius is greater than 3 m (10 ft).

The preferred locations for new installations of signal faces for fully-protected left turn movements at a typical intersection are on a mast arm of sufficient length to place one signal face as nearly as practical in line with the left turn lane and to place the second face on a standard at the far left corner.

Option:

Unusual roadway geometrics, wide medians, wide roadways, more than one left turn lane in the same direction or other factors may require the left turn signal face(s) to be mounted on standard(s) located in a median to satisfy visibility requirements.

A signal face, containing a circular green indication, may be located in a far median only when:

1. The signal phasing provides a protected left turn movement; or
2. The signal face is provided with some type of visibility control so that the indications are not visible to traffic in the left turn storage lane; or
3. It is not facing a left turn storage lane.

A signal face containing a circular green indication may be located in the near median where there is a left turn storage lane and there is no associated left turn phase.

Supplemental signal faces may be placed at a near side location or suspended from a mast arm.

Section 4D.16 <u>Number and Arrangement of Signal Sections in Vehicular Traffic Control Signal Faces</u>

Standard:

Each signal face at a signalized location shall have three, four, or five signal sections.

A single-section signal face shall be permitted at a traffic control signal if it consists of a continuously illuminated GREEN ARROW signal lens that is being used to indicate a continuous movement.

Arrows shall be pointed:

A. Vertically upward to indicate a straight-through movement;

B. Horizontally in the direction of the turn to indicate a turn at approximately or greater than a right angle; and

C. Upward with a slope at an angle approximately equal to that of the turn if the angle of the turn is substantially less than a right angle.

The signal lenses in a signal face shall be arranged in a vertical or horizontal straight line, except that in a vertical array, signal lenses of the same color may be arranged horizontally adjacent to each other at right angles to the basic straight line arrangement. Such clusters shall be limited to two identical signal lenses or to two or three different signal lenses of the same color.

In each signal face, all red signal lenses in vertically arranged signal faces shall be located above, and in horizontally arranged signal faces shall be located to the left, of all yellow and green signal lenses.

If a CIRCULAR YELLOW signal lens is used, it shall be located between the red signal lens or lenses and all other signal lenses.

In vertically arranged signal faces, each YELLOW ARROW signal lens shall be located immediately above the GREEN ARROW signal lens to which it applies. If a dual-arrow signal section (capable of alternating between the display of a GREEN ARROW and a YELLOW ARROW signal indication) is used, the lenses shall be in the same position relative to other lenses as are the GREEN ARROW signal lenses in a vertically arranged signal face.

In horizontally arranged signal faces, the YELLOW ARROW signal lens shall be located immediately to the left of the GREEN ARROW signal lens. If a dual-arrow signal section (capable of alternating between the display of a GREEN ARROW and a YELLOW ARROW signal indication) is used, the dual left-turn arrow signal lens shall be located immediately to the right of the CIRCULAR YELLOW signal lens, the straight-through GREEN ARROW signal lens shall be located immediately to the right of the CIRCULAR GREEN signal lens, and the dual right-turn arrow signal lens shall be located to the right of all other signal lenses.

The relative positions of signal lenses within the signal face shall be as follows:

A. In a vertically arranged signal face from top to bottom:

CIRCULAR RED

Left-turn RED ARROW
Right-turn RED ARROW
CIRCULAR YELLOW
CIRCULAR GREEN
Straight-through GREEN ARROW
Left-turn YELLOW ARROW
Left-turn GREEN ARROW
Right-turn YELLOW ARROW
Right-turn GREEN ARROW

B. In a horizontally arranged signal face from left to right:
CIRCULAR RED
Left-turn RED ARROW
Right-turn RED ARROW
CIRCULAR YELLOW
Left-turn YELLOW ARROW
Left-turn GREEN ARROW
CIRCULAR GREEN
Straight-through GREEN ARROW
Right-turn YELLOW ARROW
Right-turn GREEN ARROW

C. If adjacent signal indications in a signal face are not identical, their arrangement shall follow Items A or B above, as applicable.

Option:

In a vertically arranged signal face, identical signal indications may be repeated in adjacent horizontal locations within the same signal face.

Horizontally arranged and vertically arranged signal faces may be used on the same approach provided they are separated to meet the lateral separation spacing required in Section 4D.15.

Support:

Figure 4D-3 illustrates some of the possible arrangements of signal lenses in signal faces.

Section 4D.17 <u>Visibility, Shielding, and Positioning of Signal Faces</u>

Standard:

The primary consideration in signal face placement, aiming, and adjustment shall be to optimize the visibility of signal indications to approaching traffic. Road users approaching a signalized intersection or other signalized area, such as a midblock crosswalk, shall be given a clear and unmistakable indication of their right-of-way assignment.

The geometry of each intersection to be signalized, including vertical grades, horizontal curves, and obstructions as well as the lateral and vertical angles of sight toward a signal face, as determined by typical driver-eye position, shall be considered in determining the vertical, longitudinal, and lateral position of the signal face.

In cases where irregular street design necessitates placing signal faces for different street approaches with a comparatively small angle between their respective signal lenses, each signal lens shall, to the extent practical, be shielded or directed by signal visors, signal louvers, or other means so that an approaching road user can see only the signal lens(es) controlling the movements on the road user's approach.

The bottom of the signal housing and any related attachments to a vehicular signal face located over a roadway shall be at least 4.6 m (15 ft) above the pavement. The top of the signal housing of a vehicular signal face located over a roadway shall not be more than 7.8 m (25.6 ft) above the pavement.

Signal visors exceeding 300 mm (12 in) in length shall not be used on free-swinging signal heads.

The bottom of the signal housing (including brackets) of a vehicular signal face that is vertically arranged and not located over a roadway:

A. Shall be at least 2.4 m (8 ft) but not more than 5.8 m (19 ft) above the sidewalk or, if there is no sidewalk, above the pavement grade at the center of the roadway.

B. Shall be at least 1.4 m (4.5 ft) but not more than 5.8 m (19 ft) above the median island grade of a center median island if located on the near side of the intersection.

The bottom of the signal housing (including brackets) of a vehicular signal face that is horizontally arranged and not located over a roadway:

A. Shall be at least 2.4 m (8 ft) but not more than 6.7 m (22 ft) above the sidewalk or, if there is no sidewalk, above the pavement grade at the center of the roadway.

B. Shall be at least 1.4 m (4.5 ft) but not more than 6.7 m (22 ft) above the median island grade of a center median island if located on the near side of the intersection.

Signal heads mounted at less than 4.6 meters (15 feet) from the bottom of the housing and any related attachments at the side of a roadway with curbs shall have a horizontal clearance of not less than 0.6 m (2 ft) from the face of a vertical curb. If there is no curb, signal heads shall have a horizontal clearance of not less than 0.6 m (2 ft) from the edge of a shoulder.

Guidance:

There should be legal authority to prohibit the display of any unauthorized sign, signal, marking, or device that interferes with the effectiveness of any official traffic control device (see Section 11-205 of the "Uniform Vehicle Code").

Signal visors should be used on signal faces to aid in directing the signal indication specifically to approaching traffic, as well as to reduce "sun phantom," which can result when external light enters the lens.

The use of signal visors, or the use of signal faces or devices that direct the light without a reduction in intensity, should be considered as an alternative to signal louvers because of the reduction in light output caused by signal louvers.

The use of a signal backplate for target value enhancement should be considered on signal faces viewed against a bright sky or bright or confusing backgrounds.

Support:

The use of backplates enhances the contrast between the traffic signal indications and their surroundings for both day and night conditions, which is also helpful to elderly drivers.

Guidance:

A signal backplate should be used on signal faces for all roadways.

Option:

Special signal faces, such as visibility-limited signal faces, may be used such that the road user does not see signal indications intended for other approaches before seeing the signal indications for their own approach, if simultaneous viewing of both signal indications could cause the road user to be misdirected.

If the sight distance to the signal heads facing the approach is limited by horizontal or vertical alignment, supplemental signal faces aimed at a point on the approach at which the signal indications first become visible may be used.

Section 4D.18 <u>Design, Illumination, and Color of Signal Sections</u>

Standard:

Each signal indication, except those used for pedestrian signal heads and lane-use control signals, shall be circular or arrow.

Letters or numbers shall not be displayed as part of a vehicular signal indication.

Each signal indication shall be independently illuminated.

Each circular signal indication shall emit a single color: red, yellow, or green.

Each arrow signal indication shall emit a single color: red, yellow, or green except that the alternate display (dual-arrow signal section) of a GREEN ARROW and a YELLOW ARROW signal indication, both pointing in the same direction, shall be permitted, provided that they are not displayed simultaneously.

The arrow, which shall show only one direction, shall be the only illuminated part of an arrow signal indication.

Except for the requirements of this section, the requirements of the "Standards for Vehicle Traffic Control Signal Heads" (see Section 1A.11) shall be met.

References to signal lenses in this section shall not be used to limit signal optical units to incandescent lamps within optical assemblies that include lenses.

Support:

Research has resulted in signal optical units that are not lenses, such as, but not limited to, light-emitting diode (LED) traffic signal modules. Some units are practical for all signal indications, and some are practical for specific types such as visibility-limited signal indications.

Guidance:

The intensity and distribution of light from each illuminated signal lens should conform to the current "Standards for Vehicle Traffic Control Signal Heads" and "Traffic Signal Lamps" (see Section 1A.11).

If a signal indication is operated in the flashing mode for nighttime operation and the signal indication is so bright as to cause excessive glare, some form of automatic dimming should be used to reduce the brilliance of the signal indication.

Standard:

The inside of signal visors (hoods), the entire surface of louvers and fins, and the front surface of backplates shall have a dull black finish to minimize light reflection and to increase contrast between the signal indication and its background.

Section 4D.19 <u>Lateral Placement of Signal Supports and Cabinets</u>

Guidance:

The following items should be considered when placing signal supports and cabinets:

A. Reference should be made to the American Association of State Highway and Transportation Officials (AASHTO) "Roadside Design Guide" (see Section 1A.11) and to the "Americans with Disabilities Act Accessibility Guidelines for Buildings and Facilities (ADAAG)" (see Section 1A.11).

B. Signal supports should be placed as far as practical from the edge of the traveled way without adversely affecting the visibility of the signal indications.

Where supports cannot be located based on the recommended AASHTO clearances, consideration should be given to the use of appropriate safety devices.

No part of a concrete base for a signal support should extend more than 100 mm (4 in) above the ground level at any point. This limitation does not apply to the concrete base for a rigid support.

C. In order to minimize hindrance to the passage of persons with physical disabilities, a signal support or controller cabinet should not obstruct the sidewalk, or access from the sidewalk to the crosswalk.

D. Controller cabinets should be located as far as practical from the edge of the roadway.

E. On medians, the above minimum clearances for signal supports should be obtained if practical.

Guidance:

Normally, controller cabinets should be located in accordance with the following:

1. It should not be vulnerable to traffic.
2. Traffic movements at the intersection should be visible from the controller timing position.
3. The doors of the cabinet should open away from the curb or traveled way.
4. It should be possible to park a maintenance truck close to the cabinet.
5. It should not be located in a drainage ditch, in an area which could be under water or where subjected to water from sprinklers.
6. It should not obstruct sidewalks, wheelchair ramps, or store entrances.
7. It should be placed so as not to obstruct pedestrian or driver visibility.

Support:

Refer to Figures 4D-102(CA) through 4D-108(CA) for typical signal layouts for various intersections.

Standard:

Upon requests, keys for the police panel on traffic signal controller cabinets shall be furnished to the California Highway Patrol offices or local enforcement agencies.

Section 4D.20 <u>Temporary Traffic Control Signals</u>

Standard:

A temporary traffic control signal shall be defined as a traffic control signal that is installed for a limited time period. A portable traffic control signal shall be defined as a temporary traffic control signal that is designed so that it can be easily transported and reused at different locations.

Support:

A temporary traffic control signal is generally installed using methods that minimize the costs of installation, relocation, and/or removal. Typical temporary traffic control signals are for specific purposes, such as for one-lane, two-way facilities in temporary traffic control zones (see Chapter 4G), for a haul-road intersection, or for access to a site that will have a permanent access point developed at another location in the near future.

Standard:

Advance signing shall be used when employing a temporary traffic control signal.

A temporary traffic control signal shall:

A. Meet the physical display and operational requirements of a conventional traffic control signal.

B. Be removed when no longer needed.

C. Be placed in the flashing mode when not being used if it will be operated in the steady mode within 5 working days; otherwise, it shall be removed.

D. Be placed in the flashing mode during periods when it is not desirable to operate the signal, or the signal heads shall be covered, turned, or taken down to indicate that the signal is not in operation.

E. Each temporary signals plan shall include the equipment details.

F. Signal faces, detectors and control equipment shall be kept in good operating condition at all times.

G. Timing of the signals shall be determined by the agency having jurisdiction.

H. A Signal Ahead (W3-3) sign (and flashing beacon, if required) shall be placed on each approach of the highway in advance of the signal.

I. Haul road signals shall be operated using manual control or vehicle detectors. The operation shall provide a green indication to the haul road only if the contractor's equipment is approaching the crossing.

J. The all-red clearance interval shall permit a vehicle to travel the length of the one-way lane before a green indication is shown to opposing traffic.

K. Failure to comply with any of the above or other specified conditions shall be justification for revoking the permit.

Guidance:

A temporary traffic control signal should be used only if engineering judgment indicates that installing the signal will improve the overall safety and/or operation of the location. The use of temporary traffic control signals by a work crew on a regular basis in their work area should be subject to the approval of the jurisdiction having authority over the roadway.

A temporary traffic control signal should not operate longer than 30 days unless associated with a longer-term temporary traffic control zone project.

For use of temporary traffic control signals in temporary traffic control zones, reference should be made to Section 6F.80.

Option:

One-way traffic control signals may utilize semi- or fully-traffic-actuated controller units, or may be manually controlled.

Temporary signals for traffic control at the intersection of a State highway and a haul road, or to provide one-way traffic control through a construction zone, may be either the fixed or portable type. Such-signals are normally installed by a contractor and may require an Encroachment Permit.

Section 4D.21 Traffic Signal Signs, Auxiliary

Support:

Traffic signal signs are sometimes used at highway traffic signal locations to instruct or guide pedestrians, bicyclists, or motorists.

Standard:

The minimum vertical and horizontal clearance of the total assembly of traffic signal signs (see Section 2B.45) shall conform to the provisions of Section 4D.17.

If used, illuminated traffic signal signs shall be designed and mounted in such a manner as to avoid glare and reflections that seriously detract from the signal indications. Traffic control signal faces shall be given dominant position and brightness to maximize their priority in the overall display.

Guidance:

Traffic signal signs should be located adjacent to the signal face to which they apply.

Section 4D.101(CA) Traffic Signal Design and Operations

Support:

The design of traffic signals by the Department of Transportation is based upon the following publications:

1. Standard Specifications.
2. Standard Plans.
3. Signal and Lighting Design Guide.
4. Ramp Meter Design Manual.
5. Highway Design Manual.

Additional references that can be used include:

1. Traffic Engineering Handbook.
2. Manual of Traffic Signal Design.
3. Traffic Control Systems Standards.
4. Traffic Control Devices Handbook.

See Section 1A.11 for information regarding these publications.

Section 4D.102(CA) Signal Plan Schedules

Guidance:

The traffic signal plans for the installation of a new signal or the major modification of an existing signal should include the following schedules:

1. Pole and Equipment Schedule.
   A pole and equipment schedule shows the types of standards, mast arm lengths, types and mounting for vehicle and pedestrian signal faces, and other equipment. See Table 4D-105(CA) and the Standard Plans.
2. Conductors and Conduit Schedule.
   A conductor and conduit schedule shows the size of each conduit run, and the size, type and number of conductors or cables in each conduit run. See Table 4D-106(CA).

Support:

Dimensions of conductors and conduit and data for determining conduit size are shown in Tables 4D-107(CA) and 4D-108(CA).

Section 4D.103(CA) Vehicle Detectors

Support:

The proper operation of a traffic-actuated signal is dependent upon the appropriate type and proper placement of detectors. The types and applications of vehicle detectors currently used include the following:

1) Inductive Loop - The inductive loop detector, because of its presence feature, detects a standing vehicle as well as a moving one. The detection area is roughly that enclosed by the loop.
2) Magnetometer- The magnetometer detector detects a standing vehicle, as well as a moving one, and has a detection area up to 1 m (3.3 ft) in diameter over each sensing element.
3) Magnetic- The magnetic detector detects only vehicles moving in excess of 8 km/h (5 mph). One sensing element covers one or two traffic lanes.
4) Video Detection- Detects vehicles passing through the field of view of a CCTV camera or image sensor. They are useful during construction or other temporary situations when lanes change frequently in width and location as well as where the installation of conduit and detector loops is expensive or difficult. Care is necessary to avoid locations and conditions, which could obscure the detector's visibility such as extreme weather, sun glare and moving shadows.
5) Pressure Sensitive.

Standard:

No new pressure sensitive installations shall be made. Existing units shall be replaced with other types of detectors loop when:

a. They require relocation;
b. The traffic signal is to be modified; or
c. The roadway is to be resurfaced.

Support:

The normal installation of inductive loop and magnetometer detectors requires sound pavement if the detector is to operate reliably.

Guidance:

If the pavement on an approach in which these detectors are to be installed is cracked, the project should include resurfacing of the areas where the detectors and lead-in cables are to be placed.

Support:

Typical installation details for inductive loop and magnetometer detectors are shown on the Standard Plans. The longitudinal location (setback) of detectors relative to the limit line depends on the speed of traffic and the type of detector operation desired. See Table 4D-101(CA) for suggested setback from Limit lines.

Section 4D.104(CA) Bicycle Signals

Support:

A bicycle signal is an electrically powered traffic control device that may only be used in combination with an existing traffic signal. Bicycle signals shall direct bicyclists to take specific actions and may be used to improve an identified safety or operational problem involving bicycles. Refer to CVC 21450.

Standard:

Only green, yellow and red lighted bicycle symbols, shall be used to implement bicycle movement at a signalized intersection. The application of bicycle signals shall be implemented only at locations that meet Department of Transportation Bicycle Signal Warrants (see Section 4C.102(CA)).

A separate signal phase for bicycle movement shall be used.

Guidance:

Alternative means of handling conflicts between bicycles and motor vehicles should be considered first.

Two alternatives that should be considered are:

1. Striping to direct a bicyclist to a lane adjacent to a traffic lane such as a bike lane to left of a right-turn-only lane.
2. Redesigning the intersection to direct a bicyclist from an off-street path to a bicycle lane at a point removed from the signalized intersection.

A bicycle signal phase should be considered only after these and other less restrictive remedies have had an adequate trial with enforcement and with the result that the collision frequency has not been reduced.

Section 4D.105(CA) Bicycle Detectors

Option:

Bicycle detectors may be required at traffic-actuated signal installations.

The loop detector logo shown on Department of Transportation's Standard Plan A24C may be used to show a bicyclist where to stop in a bike lane or traffic lane to be detected.

Support:

See Figure 4D-111(CA) for suggested locations of bicycle detectors and Department of Transportation's Standard Plans for typical bike lane pavement markings.

Efforts need to be made to ensure that signal detection devices are capable of detecting a bicycle. Detectors for traffic-actuated signals need to be located in the bicyclist's expected path, including left-turn lanes and shoulders. Marking the road surface to indicate the optimum location for bicycle detection is helpful to the bicyclist. Video detection is an effective alternate technique to loop detection.

Section 4D.106(CA) Selection of Traffic Signal Operation

Guidance:

A prime factor to be considered in selection of the type of traffic signal operation is adequacy. While it may be true that a sophisticated signal control will operate satisfactorily at any intersection, the intersection should not be provided with a type of control that is unnecessarily complex and expensive.

Support:

The type of traffic signal operation to be used is dependent upon the variations in traffic demand. The two general types of signal operation are pretimed and traffic-actuated. Traffic-actuated operation can be further classified as full-traffic-actuated or semi-traffic-actuated. With full-traffic-actuated operation, all traffic movements or phases are provided with detectors. In semi-traffic-actuated operation, certain phases (usually the coordinated phases) do not have detectors.

Guidance:

Pretimed and semi-traffic-actuated operation should be used in coordinated systems only. They should not be installed at isolated intersections (more than 1.6 km (1 mile) from the closest signalized intersection).

Where the distance between signalized intersections is 0.8 km (0.5 mi) or less, coordination of signals should be considered, including the preparation of a time-space diagram and an evaluation of the cost-effectiveness of coordination.

Discretion should be used with phasing at offset intersections as it may introduce operational problems, which should be recognized and avoided. The most critical of these problems is where one approach right-of-way is terminated while the opposing approach continues with a green indication.

Section 4D.107(CA) Selection of Left-Turn Phasing

Support:

There are various methods to signalize left turn movements. See Figure 4D-101(CA).

Guidance:

If the left turn volume is 300 or more vehicles per hour, or if delays to traffic at the intersection can be significantly reduced, consideration should be given to a two-lane left turn.

Section 4D.108(CA) Dual Left

Support:

This method is most effective during free or isolated operation and is traffic-actuated. It is the most efficient means of providing protected left turn movements since the various phases and combinations of phases appear only on demand. A through movement is allowed to go with its associated left turn movement when there is no opposing left turn traffic.

Section 4D.109(CA) Lead-Lag

Guidance:

This operation can be either pretimed or traffic-actuated. Normally, "Lead-Lag" phasing should be considered for coordinated signals when the offset timing determined by the system time-space diagram results in the arrival of the two directions of traffic at different times during a cycle. This will provide the most efficient progressive band.

Section 4D.110(CA) Opposite or Opposing

Guidance:

Opposing operation should be used where the left turn volume per lane is very high in either direction and is about equal to or greater than the companion through movement.

Support:

This method is especially useful when one of the through lanes must be used as an optional turning lane or where a separate left turn lane cannot be provided.

Section 4D.111(CA) Permissive Left-Turn Phasing

Guidance:

When a protected-permissive or permissive-protected left-turn phasing operation is used for a signal system, no information sign is necessary.

Standard:

If a sign is used, it shall be a LEFT TURN YIELD ON GREEN (Green Ball symbol) (R10-12) sign.

Option:

Public agencies having jurisdiction may use an extinguishable message sign on local roads in place of the R10-12 sign on their local roads that are not part of an intersection with a State highway.

Standard:

The extinguishable message shall say LEFT TURN YIELD in at least 150 mm (6 in) high letters. The light source shall be designed and constructed so that when illuminated, the message shall be white and remain dark when not in use. The message shall be illuminated only when the green permissive ball is lighted.

The following apply to permissive left-turn phasing:

1. This operation shall not be initiated where the left turn collision warrant is satisfied.
2. Both directions of through traffic shall be terminated simultaneously except where opposing left turns or opposing U-turns are prohibited.

Guidance:

3. Signal faces should not be placed in a median facing a left turn lane.

Support:

4. Signs are not required for this operation unless U-turns are to be prohibited.

Section 4D.112(CA) Signals at Interchanges

Support:

Signals at freeway interchanges require special consideration as to phasing and timing to minimize backup of traffic onto the freeway lanes.

In addition, signals at diamond-type interchanges require phasing and timing to provide the necessary turning movements from the cross street to and from the ramps, without a backup of traffic between the ramps.

Guidance:

Figures 4D-109(CA) and 4D-110(CA) are guides and should be used to determine the timing of traffic signals at diamond interchanges. These figures should be used in conjunction with Table 4D-103(CA) to determine the timing of the splits and offsets for diamond interchange signals.

Support:

The decision whether to use pretimed or traffic-actuated operation is dependent not only upon traffic conditions in the interchange area, but also upon traffic conditions along the cross street. For example, a coordinated traffic signal system along the cross street may require that the signals at the interchange be coordinated with the cross street progression.

Section 4D.113(CA) Timing of Green Intervals

Guidance:

The proportion of green time, or split, allotted to each phase or combination of phases during a signal cycle, should be as close as practicable to the proportion of critical lane traffic volumes on the respective approaches. In traffic-actuated operation, this proportioning is done automatically and continuously as a result of vehicle detector inputs to the controller unit.

Option:

Factors that may modify this proportioning are the time required for pedestrian intervals and the requirements of a coordinated system.

Support:

In the usual signal operation, predetermined splits can be selected by time-of-day or traffic-responsive equipment. In coordinated signal systems, the cycle length and the split can be varied by command from the system master controller.

Section 4D.114(CA) Review of Traffic Signal Operations

Guidance:

All traffic signals should be periodically reviewed for proper operation. The traffic signal operation should be observed during morning and evening peak traffic periods and during off-peak periods. If an operating deficiency is observed, the reason for the deficiency should be determined. If there is a malfunction, Maintenance unit should be notified, and after corrective work is done, further surveillance should be conducted to be sure no deficiency remains. If a need for a design change is observed, an analysis should be made to determine what improvement might be necessary to improve the design.

Improvements to consider are:

1. Timing of:
   a. Maximums or Force Offs
   b. Gap Interval
   c. Offsets
   d. Cycle Length
2. Time-of-Day or Traffic Responsive Settings
3. Signal Phasing or Phase Sequence
4. Type of Operation
5. Coordination of Signals
6. Signs, Striping and/or Pavement Markings
7. Roadway Improvements

Standard:

Timing and phasing of traffic signals and any subsequent changes in timing shall be approved by the public agency having jurisdiction. Timing records shall be kept by the agency responsible for the maintenance and/or operation and be readily available to the maintenance and traffic operations staffs and other agencies, where appropriate.

Support:

Aids for timing are shown in Table 4D-104(CA).

(This space left intentionally blank)

Figure 4D-1. Maximum Mounting Height of Signal Faces Located Between 12 Meters (40 Feet) and 16 Meters (53 Feet) from Stop Line

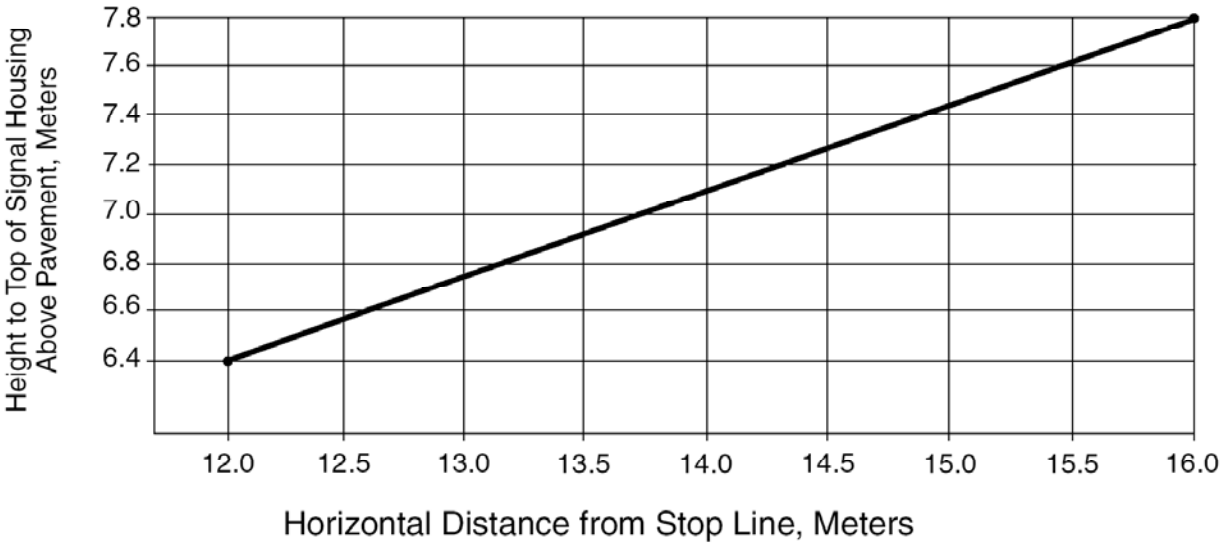

Figure 4D-2. Horizontal Location of Signal Faces

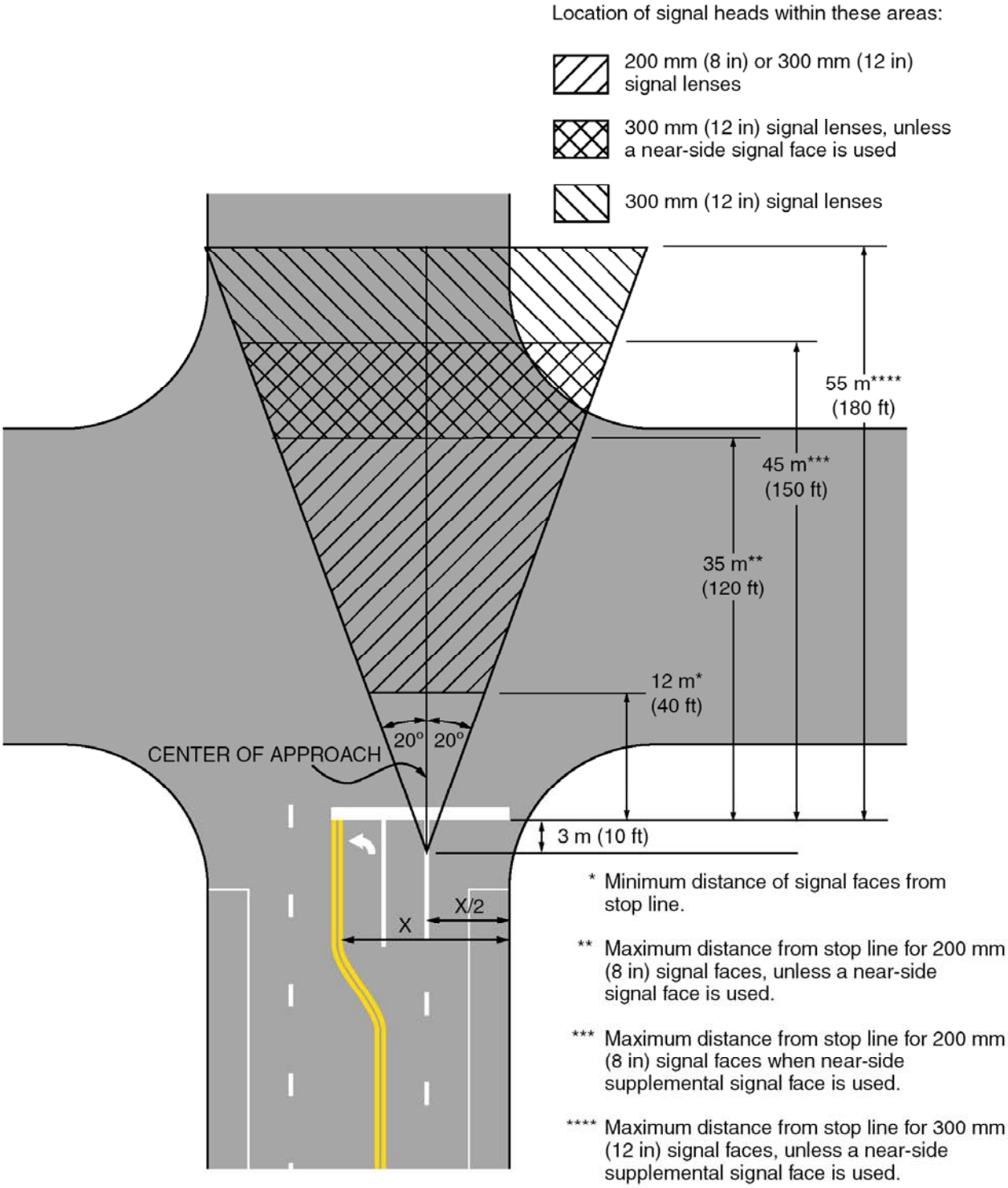

Figure 4D-3. Typical Arrangements of Signal Lenses in Signal Faces

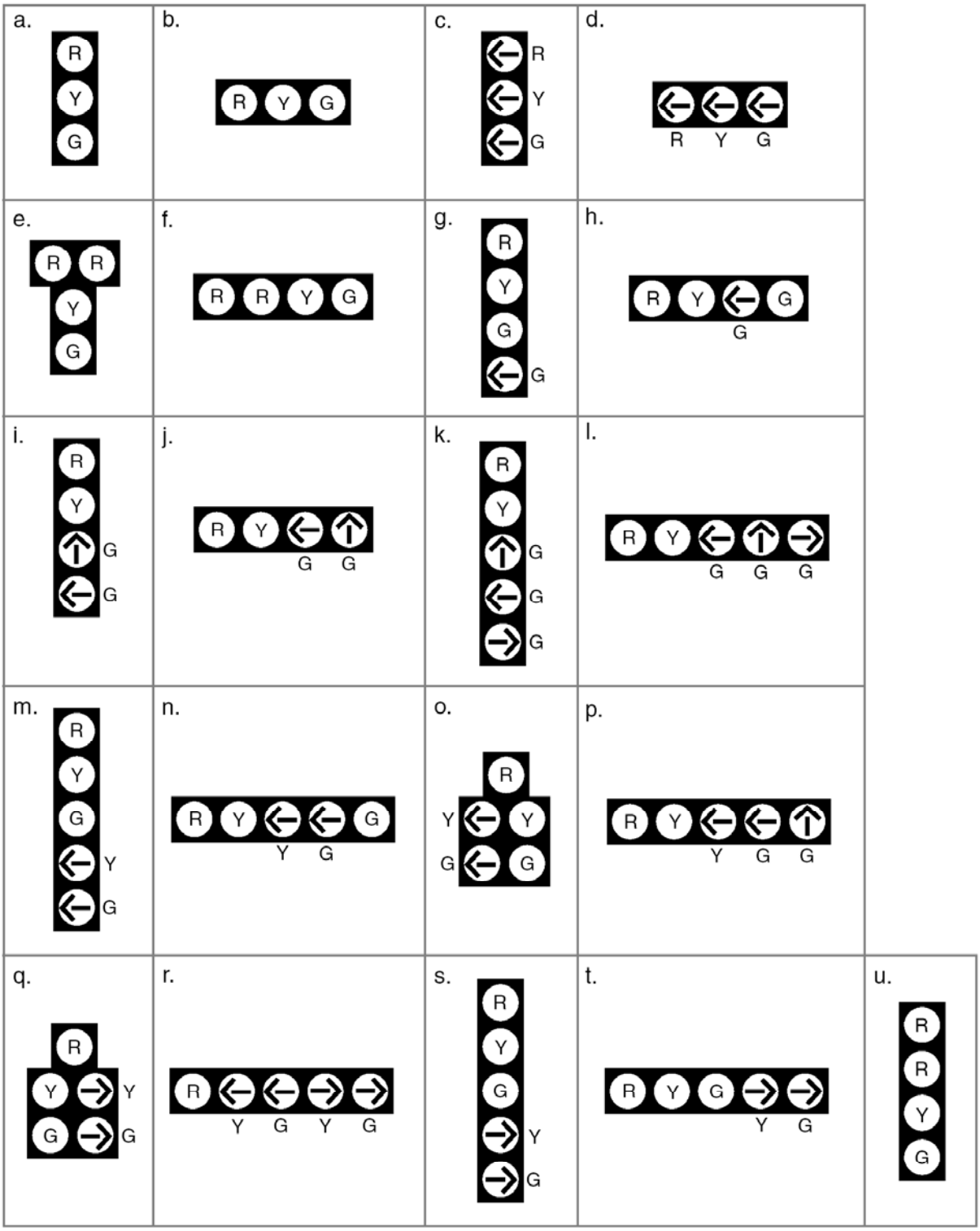

Figure 4D-3 (CA). Typical Arrangements for Signal Lenses in Signal Faces

(This space left intentionally blank)

Figure 4D-101 (CA). Left-Turn Phasing Methods(Phase Diagrams)

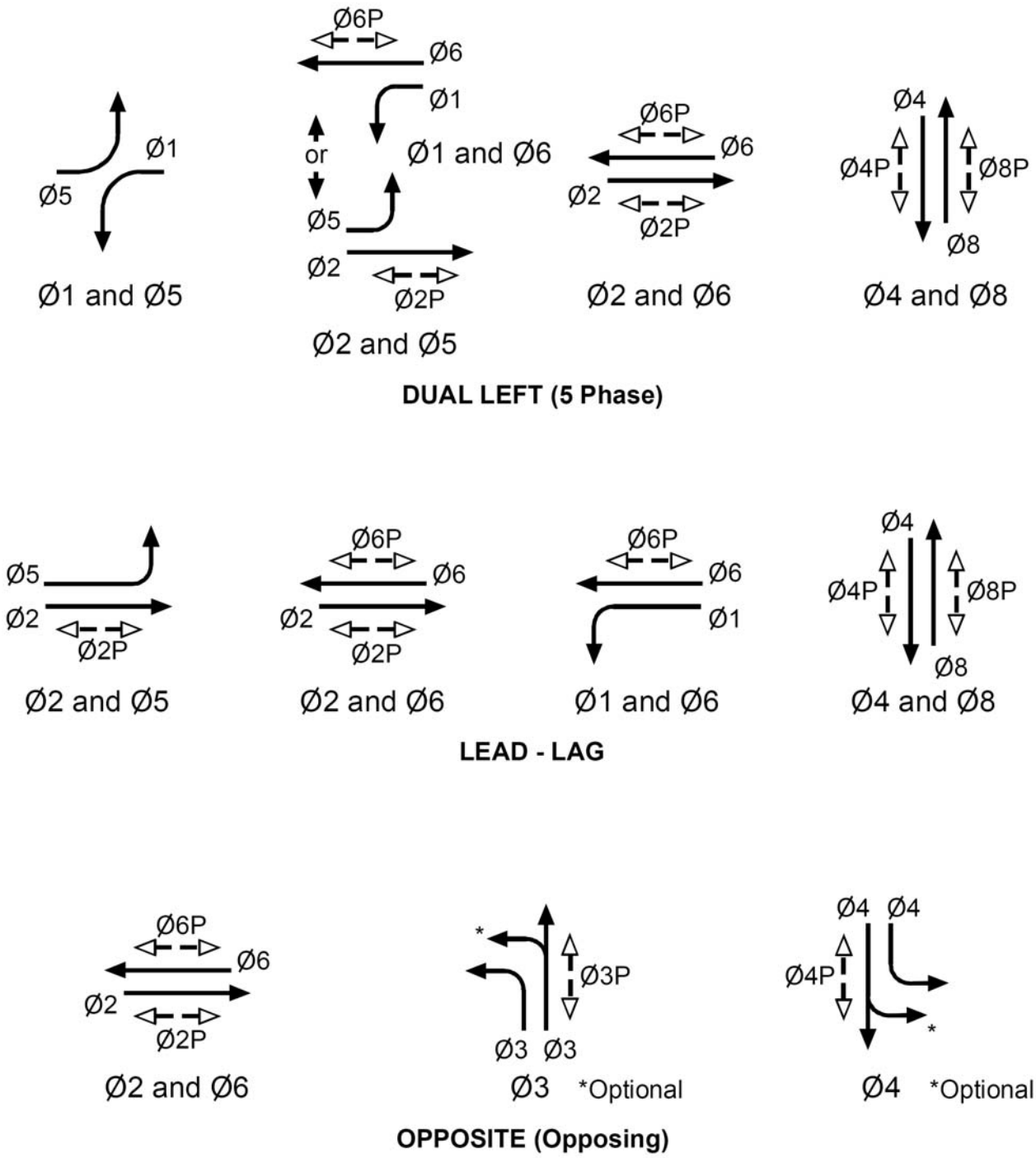

Figure 4D-102 (CA). Typical Signal Layout at Offset Intersections, Signalized and Marked as a Single Intersection (Sheet 1 of 4)

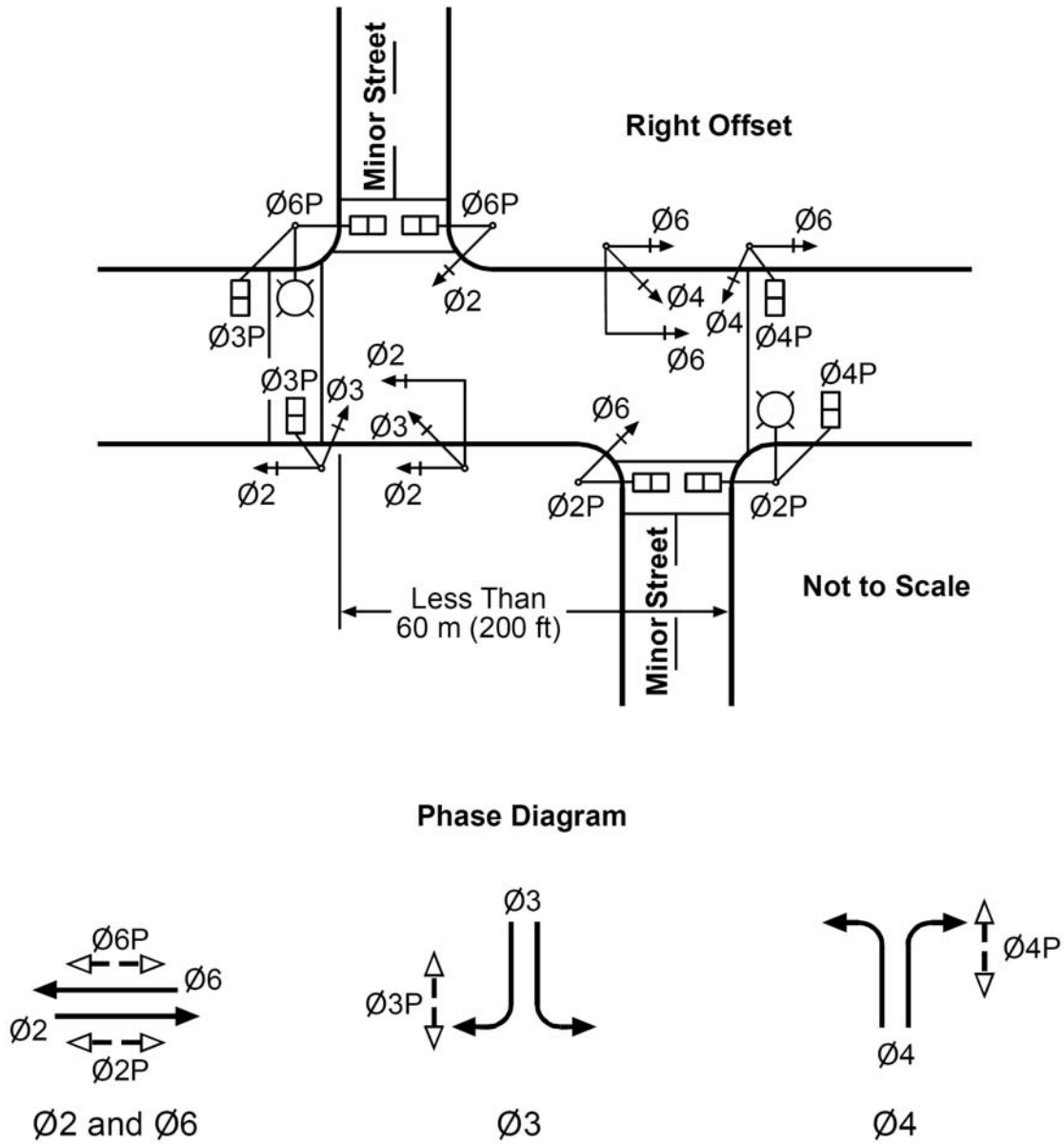

NOTE: Safety Lighting Design shall satisfy the requirements of Traffic Manual, Section 9-10.3.

Figure 4D-102 (CA). Typical Signal Layout at Offset Intersections, Signalized and Marked as a Single Intersection (Sheet 2 of 4)

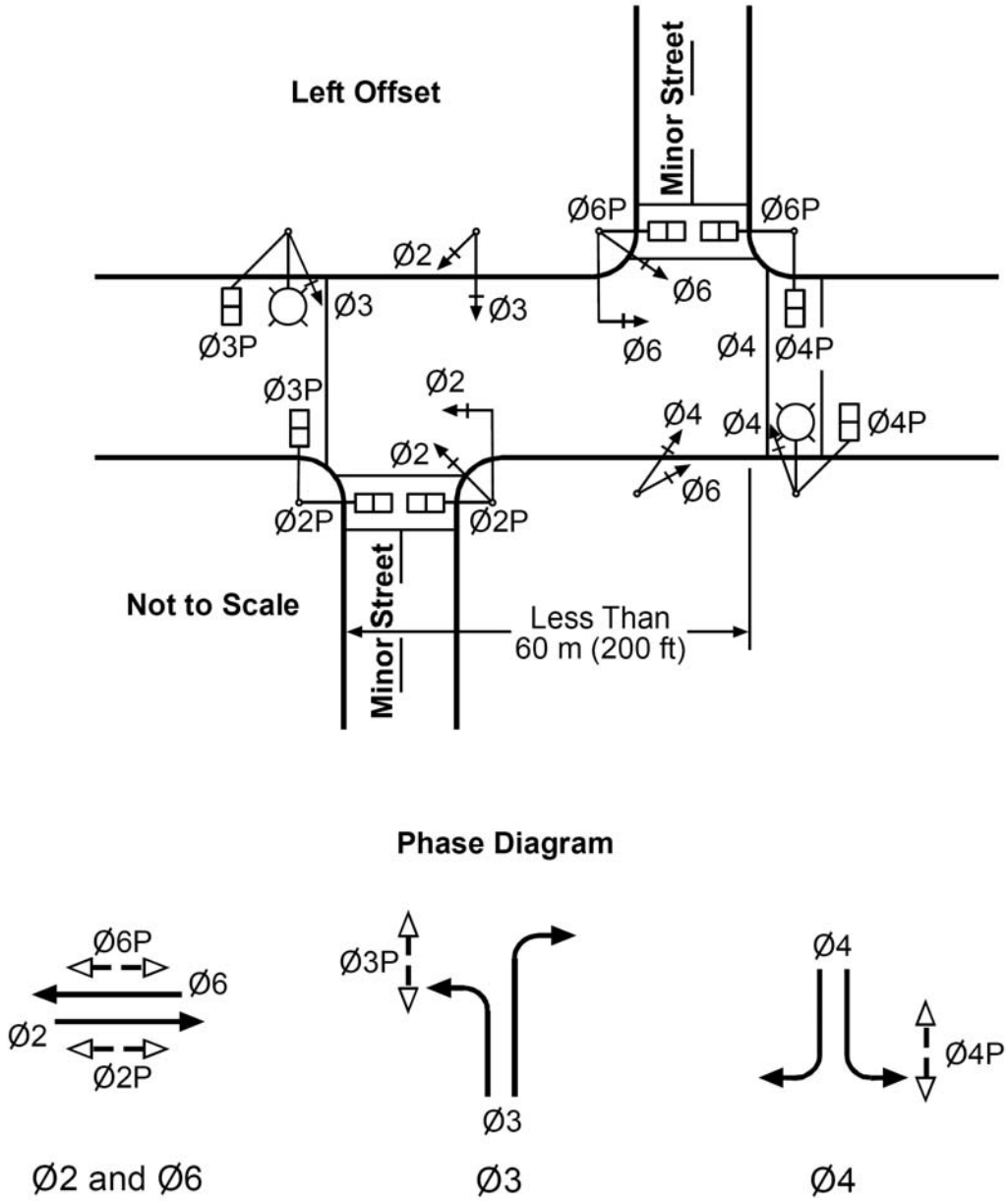

NOTE: Safety Lighting Design shall satisfy the requirements of Traffic Manual, Section 9-10.3.

Figure 4D-102 (CA). Typical Signal Layout at Offset Intersections, Signalized and Marked as a Single Intersection (Sheet 3 of 4)

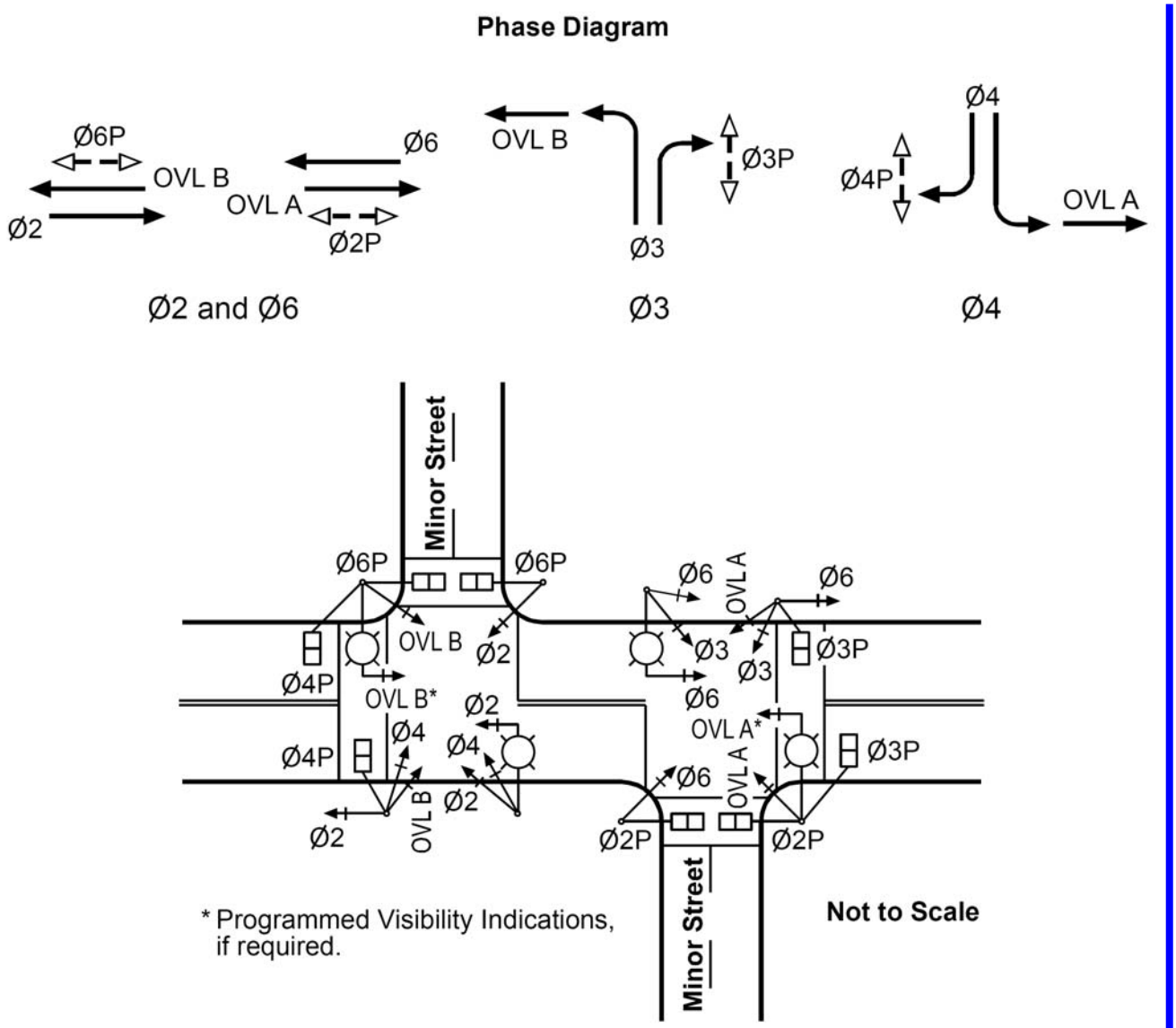

NOTE: Safety Lighting Design shall satisfy the requirements of Traffic Manual, Section 9-10.3.

Figure 4D-102 (CA). Typical Signal Layout at Offset Intersections, Signalized and Marked as a Single Intersection (Sheet 4 of 4)

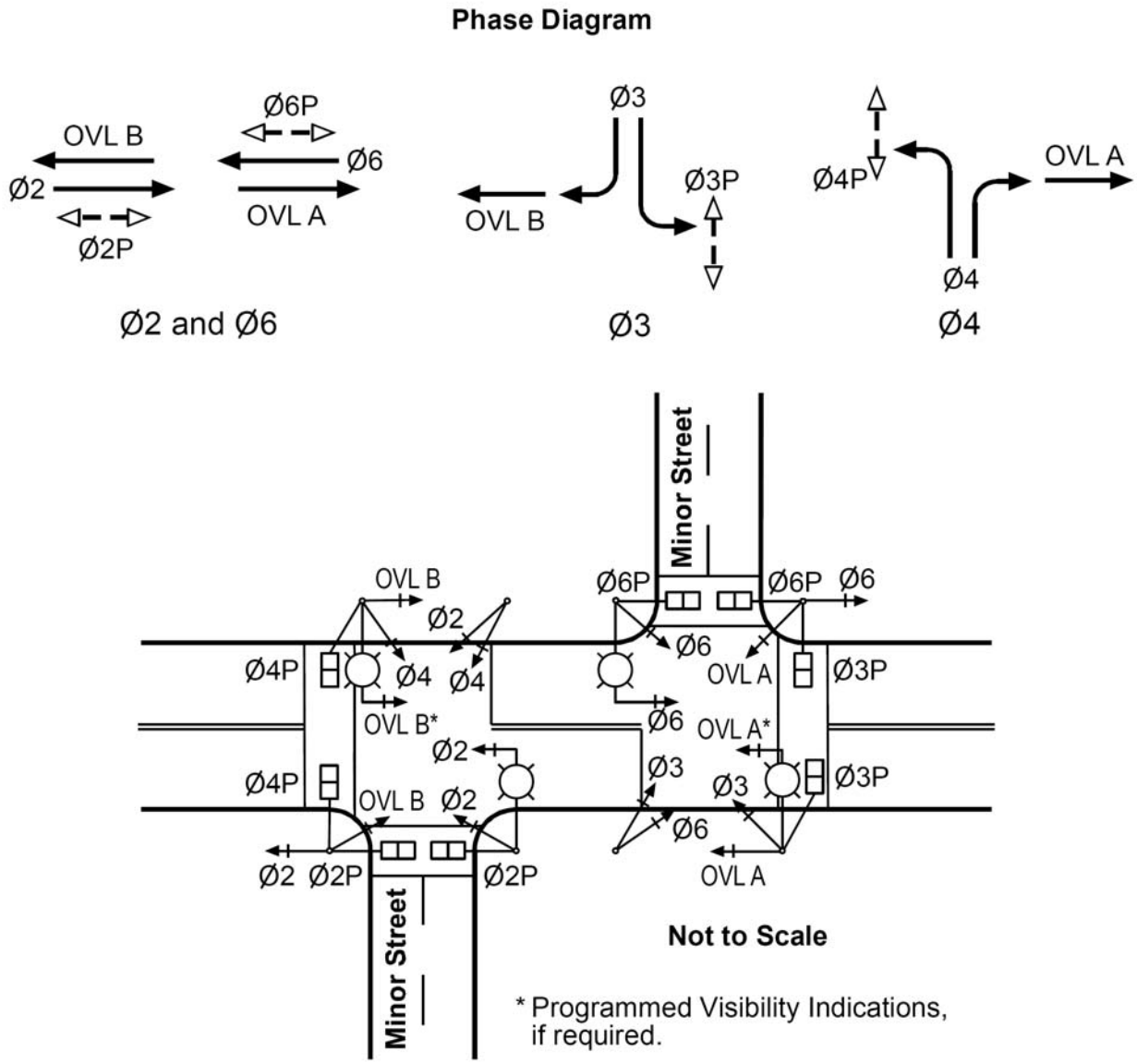

NOTE: Safety Lighting Design shall satisfy the requirements of Traffic Manual, Section 9-10.3.

Figure 4D-103 (CA). Typical Signal Layout (Two Phase Operation)

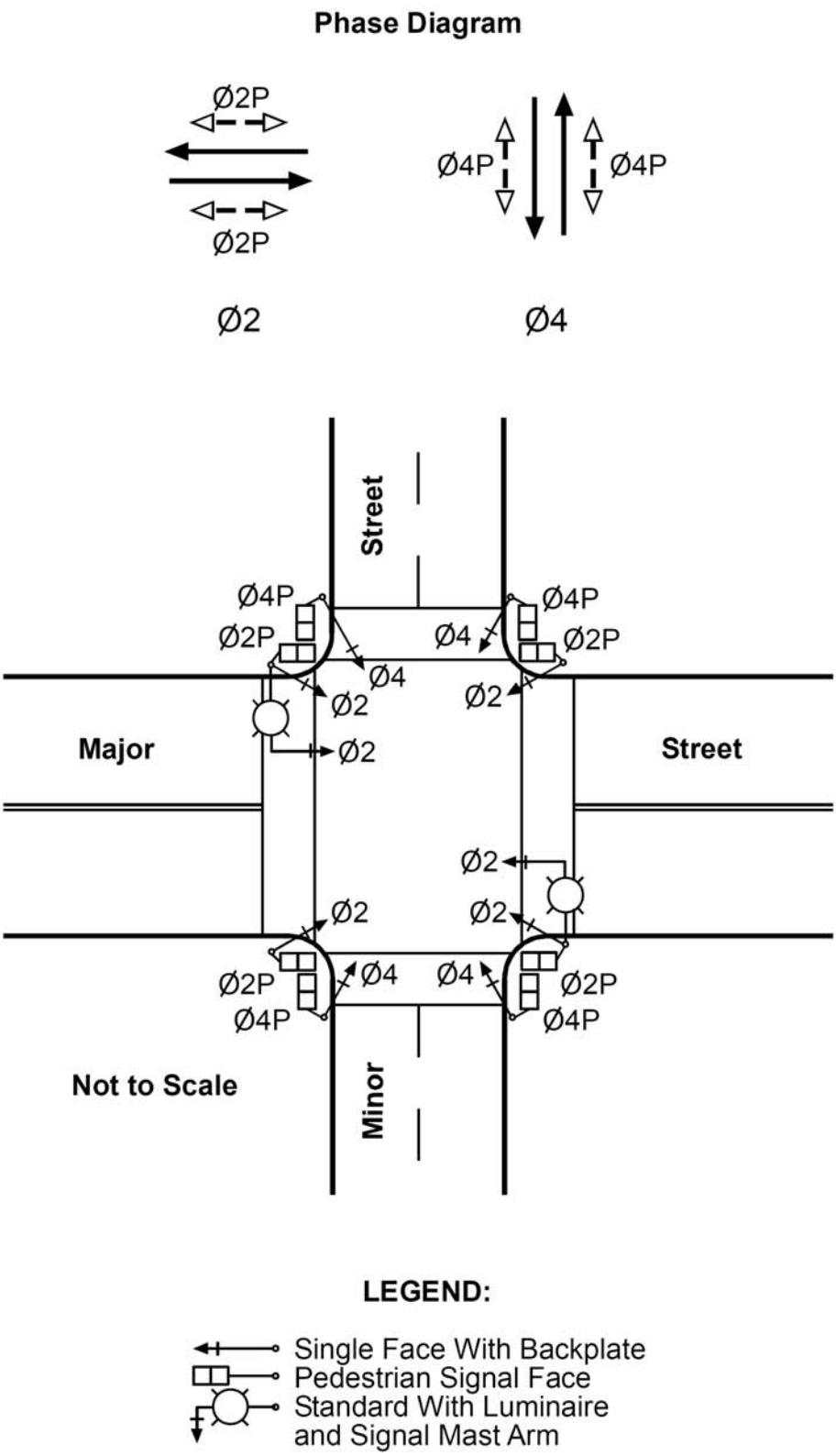

Figure 4D-104 (CA). Typical Signal Layout (Three Phase Operation)

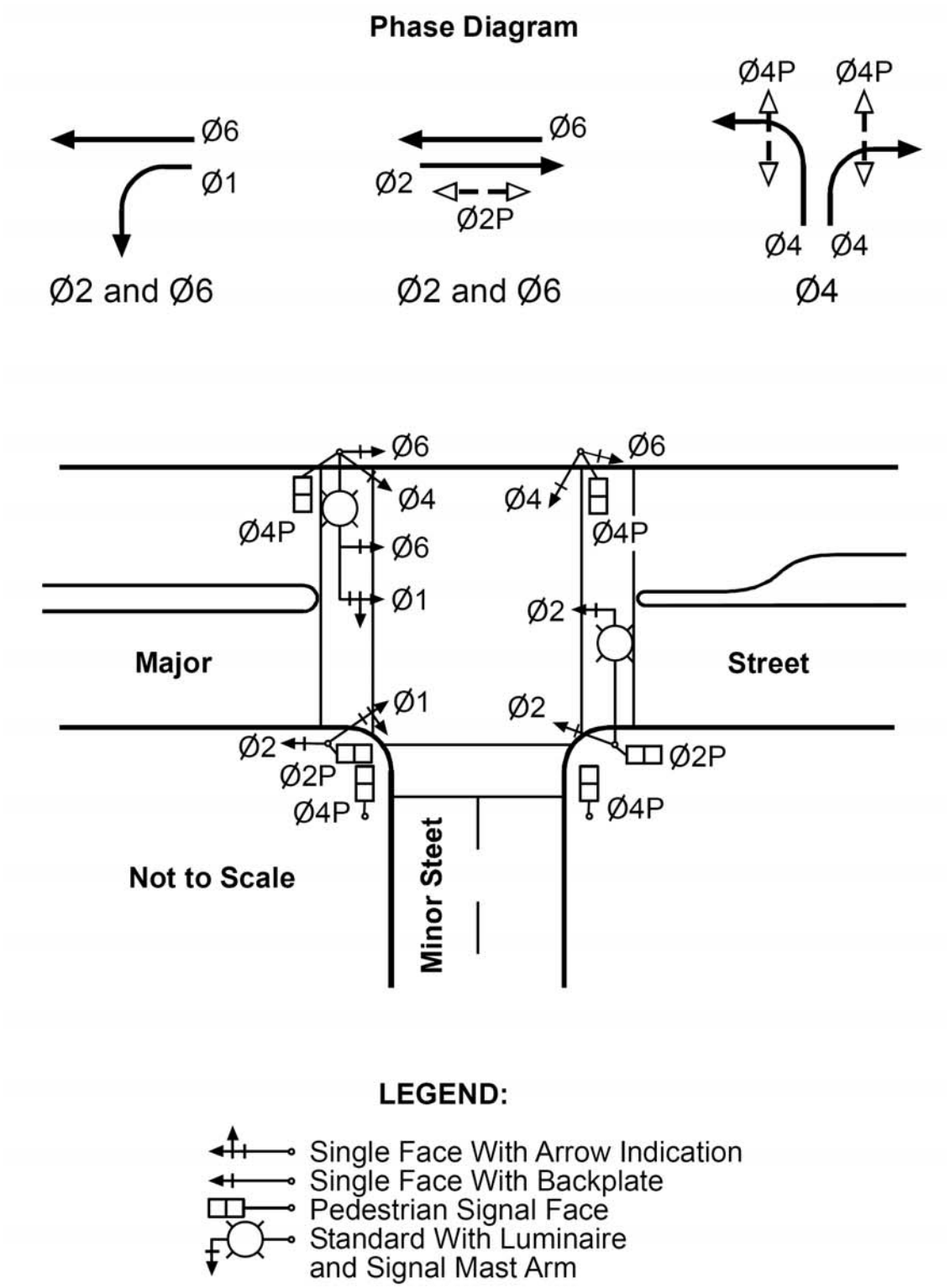

Figure 4D-105 (CA). Typical Signal Layout (Five Phase "Dual Left" Operation)

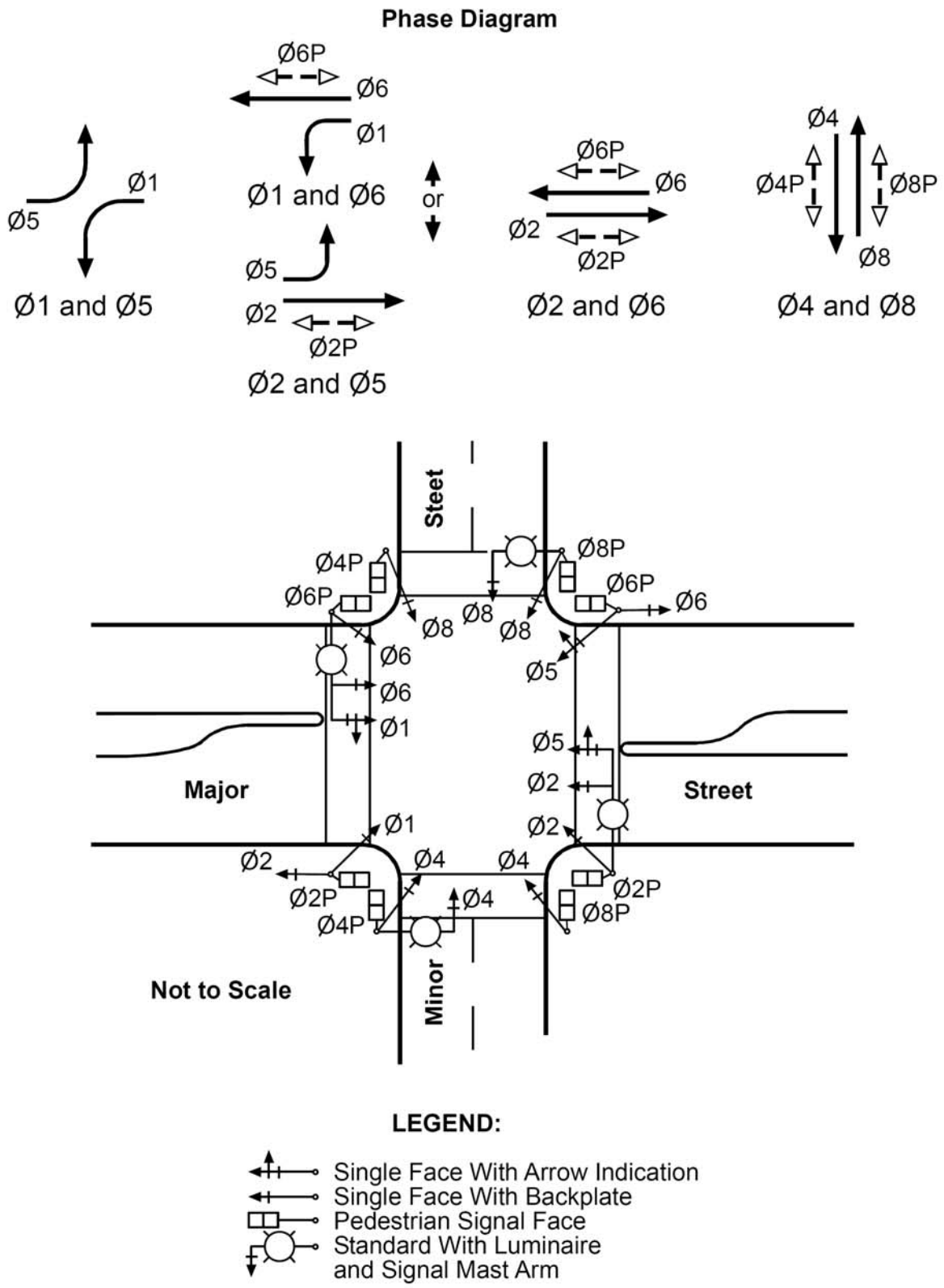

Figure 4D-106 (CA). Typical Signal Layout (Six Phase "Opposing" Operation)

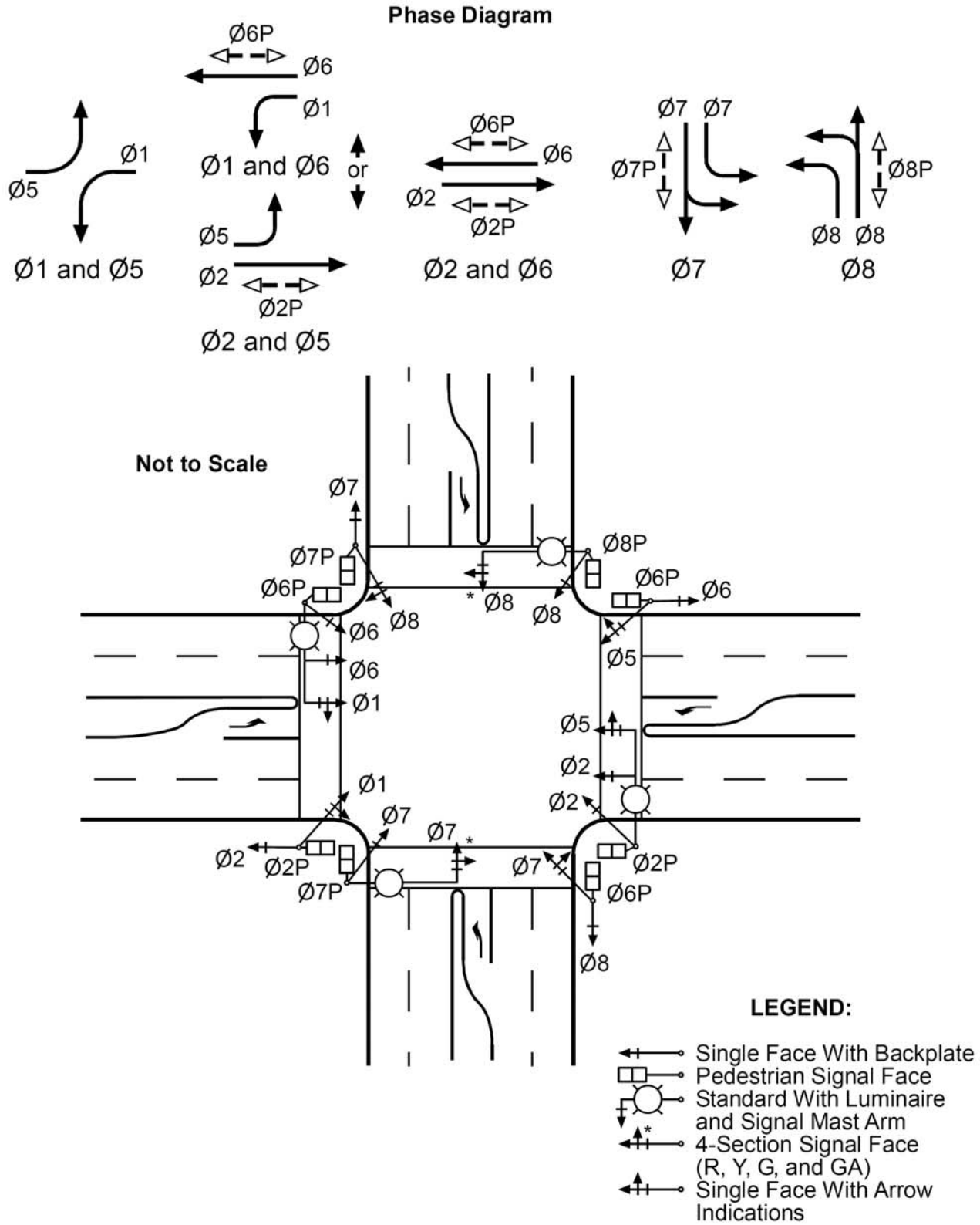

Figure 4D-107 (CA). Typical Signal Layout (Eight Phase "Quad Left" Operation)

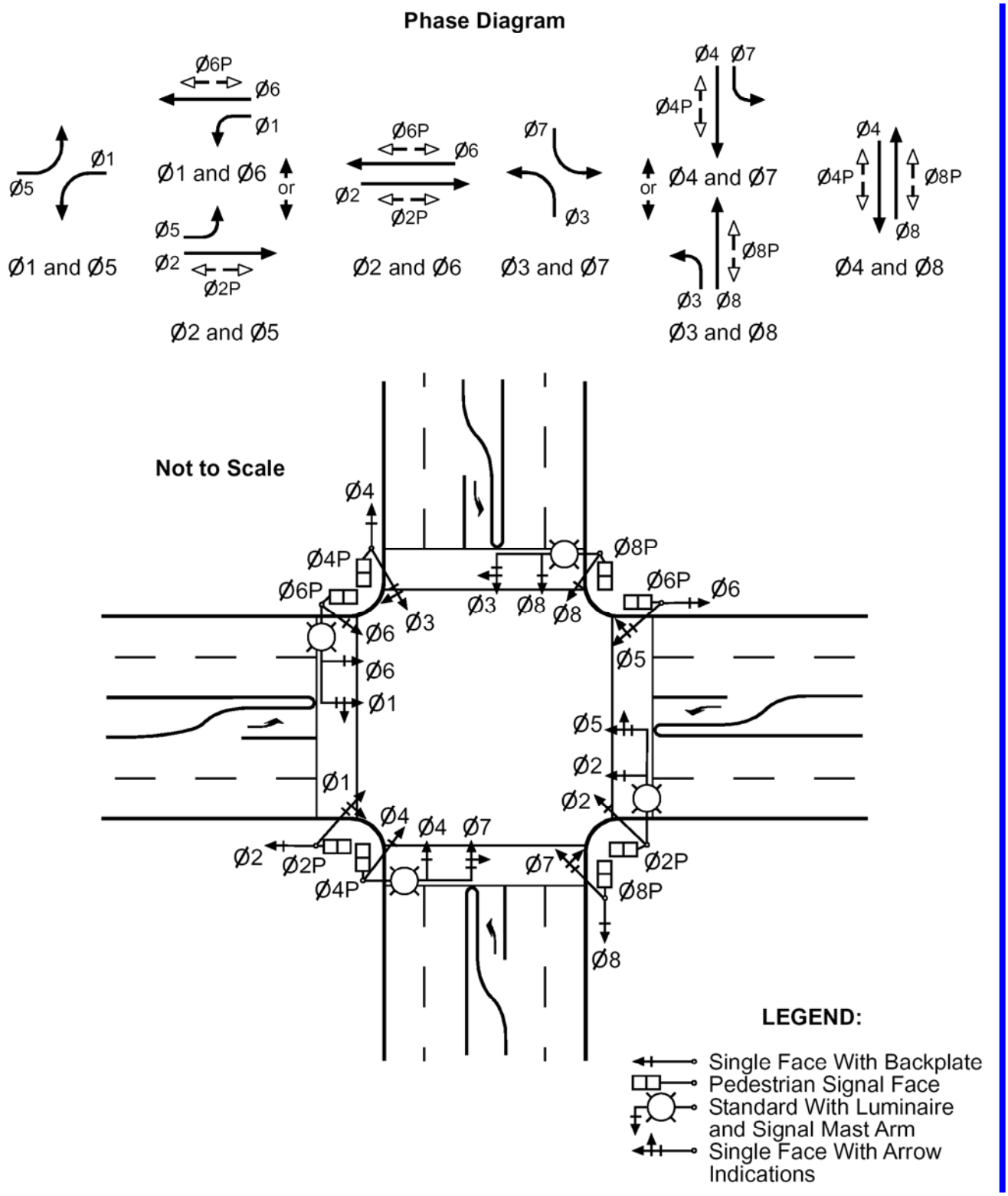

Figure 4D-108 (CA). Typical Traffic Signal Installation

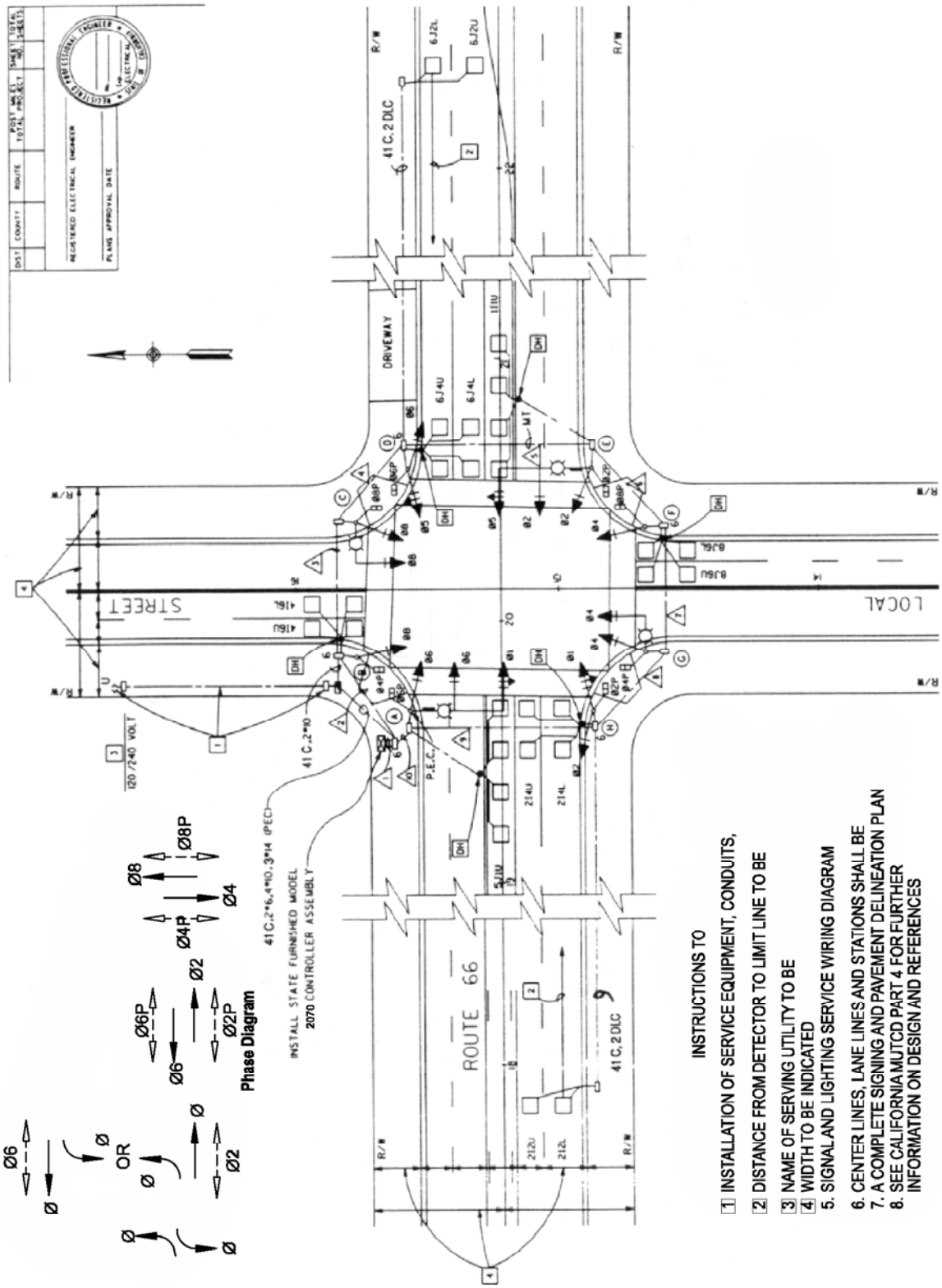

Figure 4D-109 (CA). Diamond Interchange Timing Chart (Heavy Left-Turn - 200 vphpl or More - Using Two Controllers)

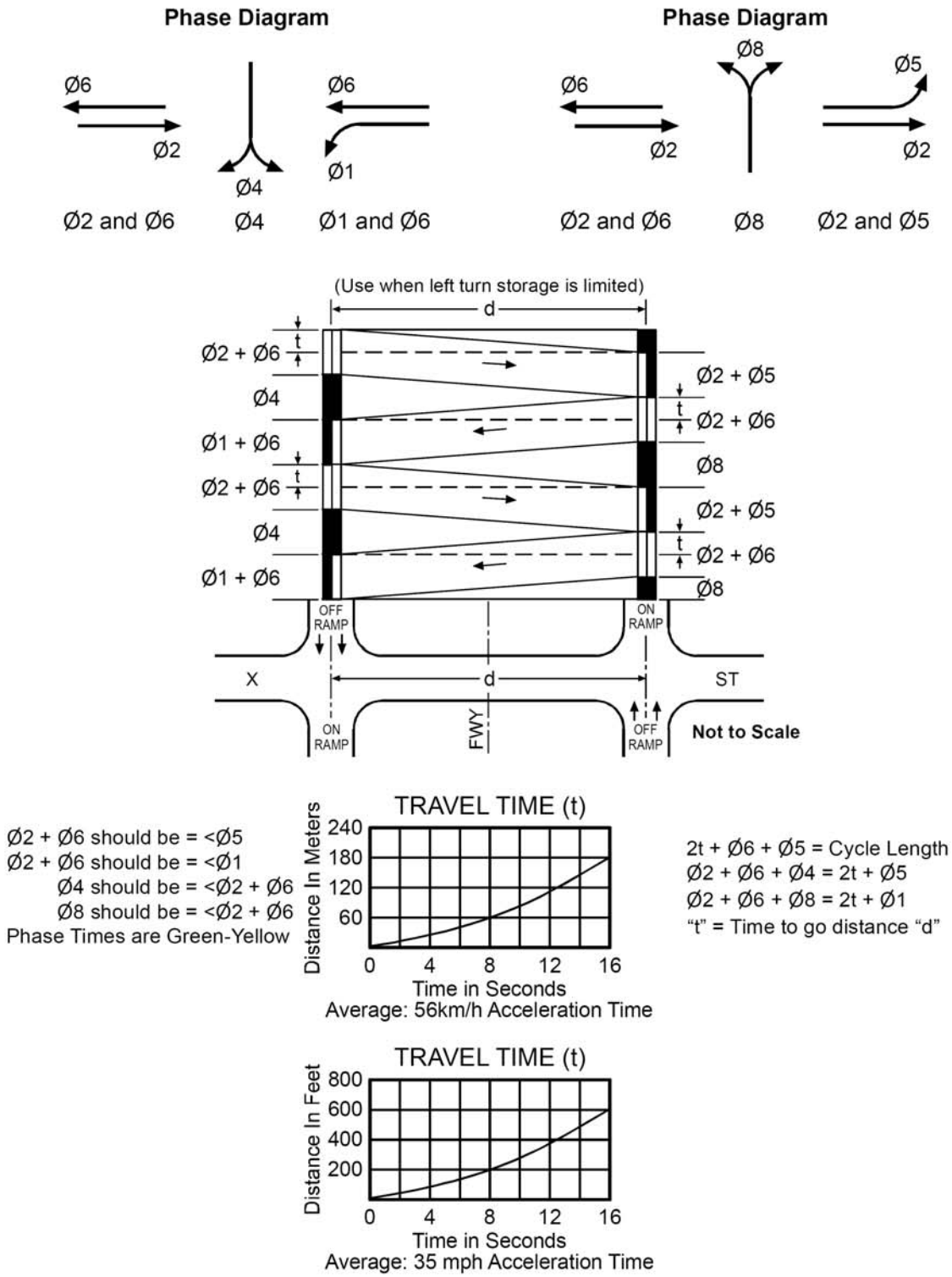

NOTE: These timing guidelines are ideal. Variations in timing may be necessary to provide proper splits to meet volume demands (See Table 4D-101 (CA)).

Figure 4D-110 (CA). Diamond Interchange Timing Chart (Light Left-Turn - 200 vphpl or Less - Using Two Controllers)

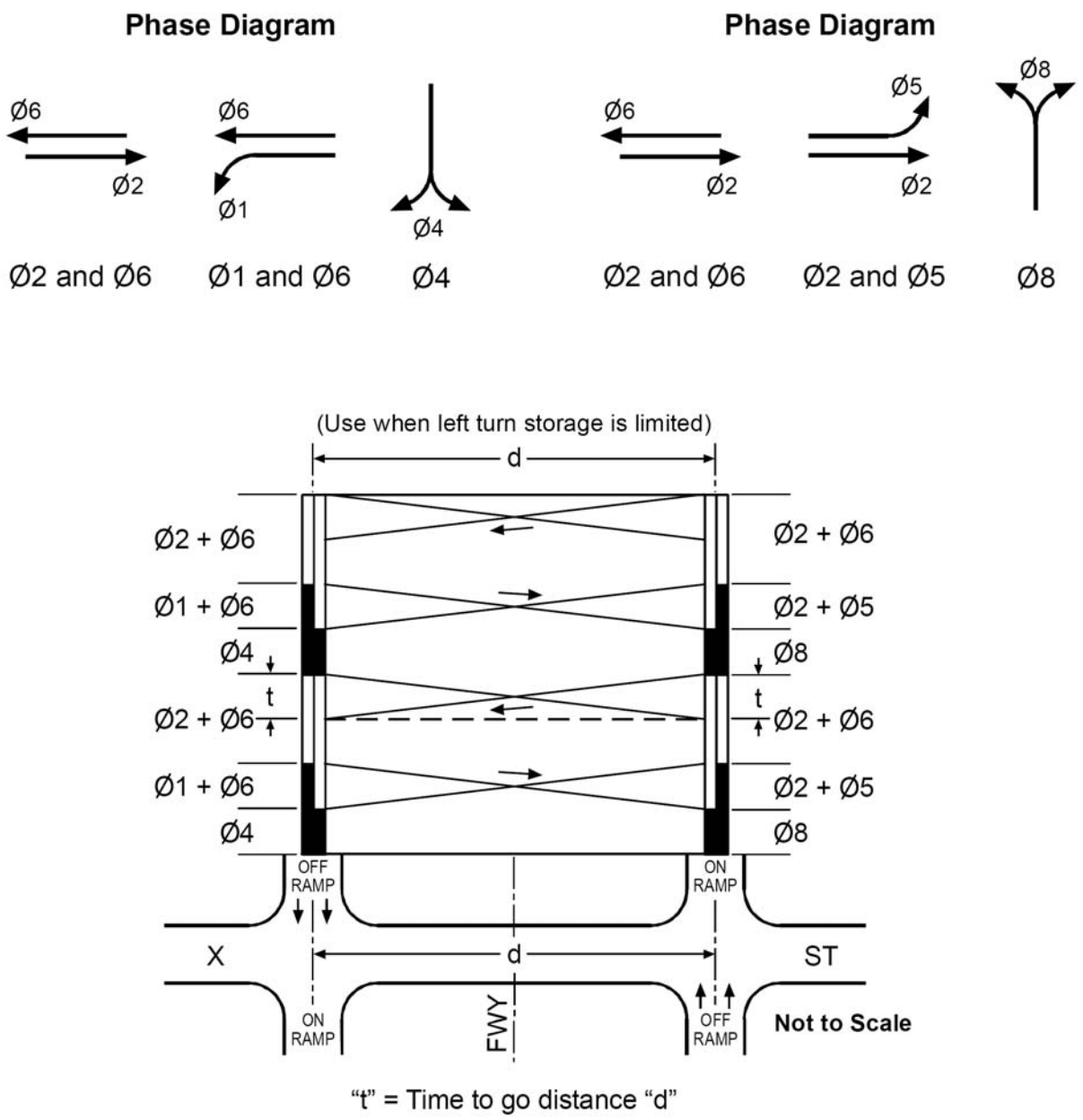

NOTES: 1. These timing guidelines are ideal. Variations in timing may be necessary to provide proper splits to meet volume demands (See Table 4D-101 (CA)).
2. The Green-Yellow interval for phases 1, 4, 5 or 8 should equal time "t".

Figure 4D-111 (CA). Bicycle Detection Systems

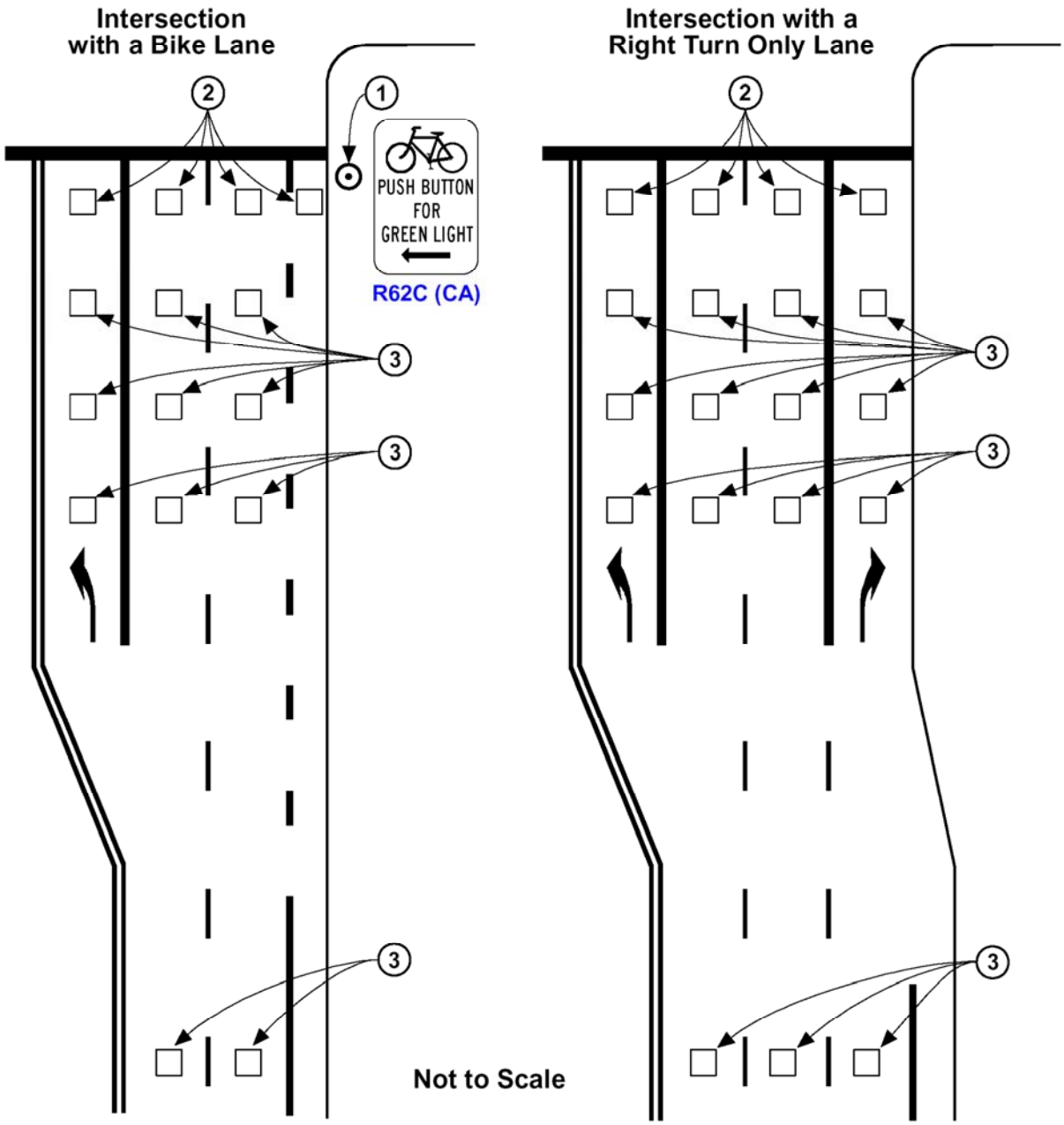

NOTES:

1. Bike/Push Button for Green Light (R62C (CA)) Sign or a Type D Loop Detector may be used to activate a traffic signal. A push button should be located so it is convenient to use by bicyclists.
2. Typical Type D Loop Detector locations.
3. Typical Loop Detector locations. See Section 4D.105 (CA).
4. See Standard Plan A24C for Bicycle Loop Detector pavement marking details.

Table 4D-1. Minimum Sight Distance

85th-Percentile Speed (km/h)	Minimum Sight Distance (meters)
30	50
40	65
50	85
60	110
70	140
80	165
90	195
100	220

85th-Percentile Speed (mph)	Minimum Sight Distance (feet)
20	175
25	215
30	270
35	325
40	390
45	460
50	540
55	625
60	715

(This space left intentionally blank)

Table 4D-101 (CA). Suggested Detector Setbacks From Limitline

Deceleration Rate $d = 3.05\ m/sec^2\ (10\ ft/sec^2)$

Reaction Time $t_R = 1.00\ sec$

Reaction Distance $= Vt_R$

Deceleration Distance $= {}^1/_2 dt^2$ or ${}^1/_2 Vt$ or $\frac{V^2}{2d}$

Deceleration Time $= \frac{V}{d}$

Detector Setback = Deceleration Distance + Reaction Distance $= \frac{V^2}{2d} + Vt_R$

V = Deceleration Speed (m/sec or ft/sec)

t_D **= Deceleration Time (sec)**

Note: Speed must be expressed in feet per second and the Deceleration Setback will be measured in feet.

SPEED				DEC. TIME	DECELERATION DISTANCE		TOTAL TIME	DETECTOR SETBACK			
								ACTUAL		SUGGESTED	
mph	km/h	m/s	feet/s	Seconds	Meters	Feet	Seconds	Meters	Feet	Meters	Feet
25	40	11.18	36.68	3.67	20.49	66.93	4.67	31.67	103.90	30	105
30	48	13.42	44.00	4.40	29.51	96.82	5.40	42.93	140.80	45	140
35	56	15.65	51.35	5.13	40.17	131.80	6.13	55.82	183.10	55	185
40	64	17.89	58.69	5.87	52.46	204.90	6.87	70.35	230.80	70	230
45	72	20.13	66.04	6.60	66.40	217.80	7.60	86.52	283.90	85	285
50	80	22.36	73.36	7.33	81.97	268.90	8.33	104.33	342.30	105	345
55	89	24.60	80.71	8.06	99.18	325.40	9.06	123.78	406.10	125	405
60	97	26.83	88.00	8.80	118.04	387.30	9.80	144.87	475.30	145	475
65	105	29.07	95.37	9.53	138.53	454.50	10.53	167.60	549.90	170	550
70	113	31.29	102.7	10.27	160.50	526.60	11.27	191.79	649.30	190	650

(This space left intentionally blank)

Table 4D-102 (CA). Minimum Yellow Light Change Interval Timing

$$\text{Yellow Time} = \frac{\text{Detector Setback Distance}}{\text{Speed}}$$

$T = \frac{D}{V}$ = The minimum yellow light change interval (sec)

V = Posted speed or prima facie Speed (m/sec or ft/sec)

d = Deceleration Rate (3.05 m/sec^2 or 10 ft/sec^2)

t_R = Reaction Time (1 sec)

Reaction Distance = Vt_R

Deceleration Distance = $\frac{1}{2}dt^2$ or $\frac{1}{2}Vt$ or $\frac{V^2}{2d}$

D = Detector Setback = Deceleration Distance + Reaction Distance = $\frac{V^2}{2d} + Vt_R$

$$T = \frac{\frac{V^2}{2d} + Vt_R}{V}$$

$$\boxed{T = \frac{V}{2d} + t_R}$$

POSTED SPEED or PRIMA FACIE SPEED		MINIMUM YELLOW INTERVAL
mph	km/h	Seconds
25 or less	40 or less	3.0
30	48	3.2
35	56	3.6
40	64	3.9
45	72	4.3
50	80	4.7
55	89	5.0
60	97	5.4
65	105	5.8

Table 4D-103 (CA). Traffic Signal Timing Analysis Chart

Number of Cars	Min. Time in Seconds Req. for Cars	Length of Stopped Queue		Length of Moving Queue		Moving Queue Time (Bond Width in Seconds)	NUMBER OF VEHICLES PER HOUR LANE AT INDICATED CYCLE LENGTH									
		Meters	Feet	Meters (48 km/h)	Feet (30 mph)		50 Sec.	60 Sec.	70 Sec.	80 Sec.	90 Sec.	100 Sec.	120 Sec.	150 Sec.	180 Sec.	240 Sec.
1	4	8	25	0	0	2	70	60	50	45	40	35	30	25	20	15
2	7	16	50	27	88	4	145	120	100	90	80	70	60	50	40	30
3	9	24	75	54	176	6	215	180	150	135	120	110	90	70	60	45
4	11	32	100	81	264	8	290	240	205	180	160	145	120	95	80	60
5	13	40	125	108	352	10	360	360	255	225	200	180	150	120	100	75
6	15	48	150	135	440	12	430	420	310	270	240	215	180	145	120	90
7	17	54	175	162	528	14	505	480	360	315	280	250	210	170	140	105
8	19	62	200	189	616	16	575	540	410	360	320	290	240	190	160	120
9	21	70	225	216	704	18	650	600	460	405	360	320	270	215	180	135
10	23	78	250	243	792	20	720	660	510	450	400	360	300	240	200	150
11	25	84	275	270	880	22	790	720	560	495	440	400	330	265	220	165
12	27	92	300	297	968	24	865	780	610	540	480	430	360	290	240	180
13	29	100	325	324	1056	26	935	840	665	585	520	470	390	315	260	195
14	31	108	350	351	1144	28	1020	900	715	630	560	500	420	340	280	210
15	33	114	375	378	1232	30	1080	960	765	675	600	540	450	365	300	225
16	35	122	400	405	1320	32	1150	1020	815	720	640	580	480	385	320	240
17	37	130	425	432	1408	34	1225	1080	865	765	680	610	510	410	340	255
18	39	138	450	459	1496	36	1295	1140	920	810	720	650	540	430	360	270
19	41	146	475	486	1584	38		1200	970	855	760	680	570	455	380	285
20	43	154	500	513	1672	40		1260	1020	900	800	720	600	480	400	300
21	45	162	525	540	1760	42		1320	1070	945	840	760	630	505	420	315
22	47	170	550	567	1848	44		1380	1120	990	880	790	660	530	440	330
23	49	178	575	594	1936	46		1440	1175	1035	920	830	690	550	460	345
24	51	186	600	621	2024	48			1225	1080	960	860	720	575	480	360
25	53	194	625	648	2112	50			1275	1125	1000	900	750	600	500	375
26	55	202	650	675	2200	52			1325	1170	1040	930	780	625	520	390
27	57	210	675	702	2288	54			1375	1215	1080	960	810	650	540	405
28	59	218	700	729	2376	56			1430	1260	1120	990	840	670	560	420
29	61	226	725	756	2464	58				1305	1160	1020	870	700	580	435

(This space left intentionally blank)

Table 4D-104 (CA). Signal Operations - Vehicular Speed (English Units)

SECONDS		10	15	20	25	30	35	40	45	50	55	60
mph	ft/s	DISTANCE TRAVELED IN FEET										
1	1.46	14.6	21.9	29.3	36.6	44.0	51.3	58.6	66.0	73.3	80.6	88.0
2	2.93	29.3	44.0	58.6	73.3	88.0	102.6	117.3	132.0	146.6	161.3	176.0
3	4.40	44.0	66.0	88.0	110.0	132.0	154.0	176.0	198.0	220.0	242.0	264.0
4	5.86	58.6	88.0	117.3	146.6	176.0	205.3	234.6	264.0	293.3	322.6	352.0
5	7.30	73.0	110.0	147.0	183.0	220.0	257.0	293.0	330.0	367.0	403.0	440.0
10	14.60	146.0	220.0	293.0	366.0	440.0	513.0	587.0	660.0	733.0	807.0	880.0
15	22.00	220.0	330.0	440.0	550.0	660.0	770.0	880.0	990.0	1,100.0	1,210.0	1,320.0
20	29.30	293.0	440.0	587.0	733.0	880.0	1,027.0	1,173.0	1,320.0	1,467.0	1,613.0	1,760.0
25	36.70	367.0	550.0	733.0	917.0	1,100.0	1,283.0	1,467.0	1,650.0	1,833.0	2,017.0	2,200.0
30	44.00	440.0	660.0	880.0	1,100.0	1,320.0	1,540.0	1,760.0	1,980.0	2,200.0	2,420.0	2,640.0
35	51.30	513.0	770.0	1,027.0	1,283.0	1,540.0	1,797.0	2,053.0	2,310.0	2,567.0	2,823.0	3,080.0
40	58.70	587.0	880.0	1,173.0	1,467.0	1,760.0	2,053.0	2,347.0	2,640.0	2,933.0	3,227.0	3,520.0
45	66.00	660.0	990.0	1,320.0	1,650.0	1,980.0	2,310.0	2,640.0	2,970.0	3,300.0	3,630.0	3,960.0
50	73.30	733.0	1,100.0	1,467.0	1,833.0	2,200.0	2,567.0	2,933.0	3,300.0	3,667.0	4,033.0	4,400.0
55	80.70	807.0	1,210.0	1,613.0	2,017.0	2,420.0	2,823.0	3,227.0	3,630.0	4,033.0	4,437.0	4,840.0
60	88.00	880.0	1,320.0	1,760.0	2,200.0	2,640.0	3,080.0	3,520.0	3,960.0	4,400.0	4,840.0	5,280.0
65	95.30	953.0	1,430.0	1,907.0	2,383.0	2,860.0	3,337.0	3,813.0	4,290.0	4,767.0	5,243.0	5,720.0
70	102.70	1,027.0	1,540.0	2,053.0	2,567.0	3,080.0	3,593.0	4,107.0	4,620.0	5,133.0	5,647.0	6,160.0
75	110.00	1,100.0	1,650.0	2,200.0	2,750.0	3,300.0	3,850.0	4,400.0	4,950.0	5,500.0	6,050.0	6,600.0
80	117.30	1,173.0	1,760.0	2,347.0	2,933.0	3,520.0	4,107.0	4,693.0	5,280.0	5,867.0	6,453.0	7,040.0
85	124.70	1,247.0	1,870.0	2,493.0	3,117.0	3,740.0	4,363.0	4,987.0	5,610.0	6,233.0	6,858.0	7,480.0
90	132.00	1,320.0	1,980.0	2,640.0	3,300.0	3,960.0	4,620.0	5,280.0	5,940.0	6,600.0	7,260.0	7,920.0
95	139.30	1,393.0	2,090.0	2,787.0	3,483.0	4,180.0	4,877.0	5,573.0	6,270.0	6,967.0	7,663.0	8,360.0
100	146.70	1,467.0	2,200.0	2,933.0	3,667.0	4,400.0	5,133.0	5,867.0	6,600.0	7,333.0	8,067.0	8,800.0
105	154.00	1,540.0	2,310.0	3,080.0	3,850.0	4,620.0	5,390.0	6,160.0	6,930.0	7,700.0	8,470.0	9,240.0
110	161.30	1,613.0	2,420.0	3,227.0	4,033.0	4,840.0	5,647.0	6,453.0	7,260.0	8,067.0	8,873.0	9,680.0
115	168.60	1,686.0	2,530.0	3,373.0	4,217.0	5,060.0	5,903.0	6,747.0	7,590.0	8,434.0	9,277.0	10,120.0
120	176.00	1,760.0	2,640.0	3,520.0	4,400.0	5,280.0	6,160.0	7,040.0	7,920.0	8,800.0	9,680.0	10,560.0

(This space left intentionally blank)

Table 4D-104 (CA). Signal Operations - Vehicular Speed (Metric Units)

SECONDS		10	15	20	25	30	35	40	45	50	55	60
km/h	m/s	DISTANCE TRAVELED IN METERS										
1	0.28	2.80	4.20	5.60	7.00	8.40	9.80	11.20	12.60	14.00	15.40	16.80
2	0.56	5.60	8.40	11.20	14.00	16.80	19.60	22.40	25.20	28.00	30.80	33.60
3	0.83	8.30	12.45	16.60	20.75	24.90	29.05	33.20	37.35	41.50	45.65	49.80
4	1.10	11.00	16.50	22.00	27.50	33.00	38.50	44.00	49.50	55.00	60.50	66.00
5	1.39	13.90	20.85	27.80	34.75	41.70	48.65	55.60	62.55	69.50	76.45	83.40
10	2.80	28.00	42.00	56.00	70.00	84.00	98.00	112.00	126.00	140.00	154.00	168.00
15	4.17	41.70	62.60	83.40	104.30	125.00	146.00	167.00	188.00	209.00	229.00	250.00
20	5.56	55.60	84.00	111.00	139.00	167.00	195.00	222.00	250.00	278.00	306.00	334.00
25	6.94	69.40	104.00	139.00	174.00	208.00	243.00	278.00	312.00	347.00	382.00	416.00
30	8.33	83.30	125.00	167.00	208.00	250.00	292.00	333.00	375.00	417.00	458.00	500.00
35	9.72	97.20	146.00	194.00	243.00	292.00	340.00	389.00	437.00	486.00	535.00	583.00
40	11.10	111.00	167.00	222.00	278.00	333.00	389.00	444.00	500.00	555.00	611.00	666.00
45	12.50	125.00	188.00	250.00	313.00	375.00	438.00	500.00	563.00	625.00	688.00	750.00
50	13.89	138.90	208.00	278.00	347.00	417.00	486.00	556.00	625.00	695.00	764.00	834.00
55	15.28	152.80	229.00	306.00	382.00	458.00	535.00	611.00	688.00	764.00	840.00	917.00
60	16.67	166.70	250.00	333.00	416.00	500.00	583.00	667.00	750.00	833.00	917.00	1000.00
65	18.06	180.60	271.00	361.00	452.00	542.00	632.00	722.00	813.00	903.00	993.00	1084.00
70	19.44	194.40	292.00	389.00	486.00	583.00	680.00	778.00	875.00	972.00	1069.00	1166.00
75	20.83	208.30	312.00	417.00	521.00	625.00	729.00	833.00	937.00	1042.00	1146.00	1250.00
80	22.22	222.20	333.00	444.00	555.00	667.00	778.00	889.00	1000.00	1111.00	1222.00	1333.00
85	23.61	236.10	354.00	472.00	590.00	708.00	826.00	944.00	1062.00	1180.00	1298.00	1416.00
90	25.00	250.00	375.00	500.00	625.00	750.00	875.00	1000.00	1125.00	1250.00	1375.00	1500.00
95	26.39	263.90	396.00	528.00	660.00	792.00	924.00	1056.00	1188.00	1320.00	1452.00	1584.00
100	27.78	277.80	417.00	556.00	695.00	834.00	972.00	1112.00	1251.00	1390.00	1529.00	1668.00
105	29.17	291.70	437.00	583.00	729.00	875.00	1021.00	1167.00	1313.00	1458.00	1604.00	1750.00
110	30.56	305.60	458.00	611.00	764.00	917.00	1070.00	1222.00	1375.00	1528.00	1681.00	1834.00

(This space left intentionally blank)

Table 4D-105 (CA). Pole and Equipment Schedule

	STANDARD						VEHICLE SIGNAL MAST		PED. SIGNAL MTG.	PPB		HPS LUM.	SPECIAL REQUIREMENTS
	TYPE		SIGNAL MAST ARM		LUMINAIRE MAST ARM								
	Wind Velocity km/h	Wind Velocity mph	Meters	Feet	Meters	Feet	MAST	POLE		Ø	ARROW		
A	24-4-161	24-4-100	10.7	35	3.7	12	MAT MAS	SV-1-T	SP-1-T	4	←	200W	Interally Illuminated Street Name Sign "Local Streets"
B	1A							TV-1-T	SP-1-T	6	→		
C	19-1-161	19-1-100	4.6	15	3.7	12	MAS	SV-1-T	SP-1-T	6	←	200W	
D	1A							TV-2-T	SP-1-T	8	→		
E	24-4-161	24-4-100	10.7	35	3.7	12	MAT MAS	SV-1-T	SP-1-T	8	←	200W	Interally Illuminated Street Name Sign "Local Streets"
F	1A							TV-1-T	SP-1-T	2	→		
G	19-1-161	19-1-100	4.6	15	3.7	12	MAS	SV-1-T	SP-1-T	2	←	200W	
H	1A							TV-2-T	SP-1-T	4	→		

(This space left intentionally blank)

Table 4D-106 (CA). Conductor and Conduit Schedule

AWG or CABLE	CONDUCTOR RUN	1	2	3	4	5	6	7	8	9	10
# 14	Ø1	3								3	3
	Ø2	3					3	3	3	3	3
	Ø4	3						3	3	3	3
	Ø5	6	3	3	3		3	3	3	3	3
	Ø6	6	3	3	3						3
	Ø8	3	3	3							
	Ø2P	2					2	2	2	2	2
	Ø4P	4	2						2	2	2
	Ø6P	4	2	2	2						2
	Ø8P	4	2	2				2	2	2	2
	Ø2PPB	1						1	1	1	1
	Ø4PPB	1								1	1
	Ø6PPB	1	1	1							
	Ø8PPB	2	1	1	1		1	1	1	1	1
	PPB Common	2	1	1	1		1	1	1	1	1
	P.E.C.										3
	Spares	6	3	3	3		3	3	3	3	
	Total # 14	51	21	19	13		13	19	21	25	35
# 10	Internally Illuminated Street Name Sign						2	2	2	2	2
	Luminaires			2			2	2	2	2	2
	Signal Common	2	1	1	1		1	1	1	1	1
	Total # 10	2	1	3	1		5	5	5	5	5
# 6	Signal Service	2									
Detector-Lead-In Cable	Ø 1 Detectors	1					1	1	1	1	1
	Ø 2 Detectors	4								4	4
	Ø 4 Detectors	2	2								
	Ø 5 Detectors	1									1
	Ø 6 Detectors	4	4	4	4						
	Ø 8 Detectors	2						2	2	2	2
	TOTAL DLC	14	6	4	4		1	3	3	7	8
CONDUIT SIZE		2-78C (2-3 in)	78C (3 in)	63C (2.5 in)	53C (2 in)	78C (3 in)	53C (2 in)	63C (2.5 in)	63C (2.5 in)	78C (3 in)	78C (3 in)

Table 4D-107 (CA). Available Conduit Area

SQUARE MILLIMETERS					
CONDUIT SIZE	PERCENT OF FILL				
	26%	35%	40%	50%	100%
35	145	194	220	277	555
41	340	460	526	658	1316
53	563	759	867	1084	2168
63	803	1081	1236	1545	3090
78	1237	1666	1904	2380	4761
91	1661	2235	2554	3193	6387
103	2134	2872	3282	4103	8206

As a practical limit, projects for new installations should be designed to the 26% fill limitation.

SQUARE INCHES					
CONDUIT SIZE	PERCENT OF FILL				
	26%	35%	40%	50%	100%
1"	0.23	0.30	0.35	0.43	0.86
1-1/2"	0.53	0.72	0.82	1.02	2.04
2"	0.87	1.18	1.34	1.68	3.36
2-1/2"	1.24	1.68	1.92	2.45	4.79
3"	1.92	2.58	2.96	3.69	7.38
3-1/2"	2.57	3.47	3.96	4.95	9.90
4"	3.31	4.45	5.09	6.36	12.72

As a practical limit, projects for new installations should be designed to the 26% fill limitation.

Table 4D-108 (CA). Conductor Size

METRIC UNITS			
CONDUCTOR SIZE (AWG)	TYPES TW,THW, USE, RHH & RHN		D.C. RESISTANCE Ohms/1000 m
	INSULATION THICKNESS (mm)	TOTAL AREA (Sq mm)	
#14	1.14	14	10.67
#12	1.14	16	6.33
#10	1.14	20	3.97
#8 Stranded	1.50	40	2.56
#6 Stranded	1.50	53	1.61
#4 Stranded	1.50	70	1.02
#2 Stranded	1.50	95	0.62
Type B Loop DetectorLead-in Cable (DLC)		47	
Type C Loop Detector Lead-in Cable (MLC)		42	
Magnetometer Detector Lead-in Cable (MLC)		32	
Signal Interconnect Cable (3-Pair)		60	
Signal Interconnect Cable (6-Pair)		117	

ENGLISH UNITS			
CONDUCTOR SIZE (AWG)	TYPES TW,THW, USE, RHH & RHN		D.C. RESISTANCE Ohms/1000 ft
	INSULATION THICKNESS (Inches)	TOTAL AREA (Sq Inches)	
#14	0.045	0.021	3.07
#12	0.045	0.025	1.93
#10	0.045	0.031	1.21
#8 Stranded	0.060	0.060	0.78
#6 Stranded	0.060	0.082	0.49
#4 Stranded	0.060	0.109	0.31
#2 Stranded	0.060	0.147	0.19
Type B Loop DetectorLead-in Cable (DLC)		0.073	
Type C Loop Detector Lead-in Cable (MLC)		0.064	
Magnetometer Detector Lead-in Cable (MLC)		0.049	
Signal Interconnect Cable (3-Pair)		0.091	
Signal Interconnect Cable (6-Pair)		0.181	

(This page left intentionally blank)

CHAPTER 4E. PEDESTRIAN CONTROL FEATURES

Section 4E.01 Pedestrian Signal Heads

Support:

Pedestrian signal heads provide special types of traffic signal indications exclusively intended for controlling pedestrian traffic. These signal indications consist of the illuminated symbols of a WALKING PERSON (symbolizing WALK) and an UPRAISED HAND (symbolizing DONT WALK).

Guidance:

Engineering judgment should determine the need for separate pedestrian signal heads (see Section 4D.03) and accessible pedestrian signals (see Section 4E.06).

Standard:

Signal design shall provide for or prohibit pedestrian movements.

Section 4E.02 Meaning of Pedestrian Signal Head Indications

Standard:

Pedestrian signal head indications shall have the following meanings:

A. A steady WALKING PERSON (symbolizing WALK) signal indication means that a pedestrian facing the signal indication is permitted to start to cross the roadway in the direction of the signal indication, possibly in conflict with turning vehicles. The pedestrian shall yield the right-of-way to vehicles lawfully within the intersection at the time that the WALKING PERSON (symbolizing WALK) signal indication is first shown.

B. A flashing UPRAISED HAND (symbolizing DONT WALK) signal indication means that a pedestrian shall not start to cross the roadway in the direction of the signal indication, but that any pedestrian who has already started to cross on a steady WALKING PERSON (symbolizing WALK) signal indication shall proceed out of the traveled way.

C. A steady UPRAISED HAND (symbolizing DONT WALK) signal indication means that a pedestrian shall not enter the roadway in the direction of the signal indication.

D. A flashing WALKING PERSON (symbolizing WALK) signal indication has no meaning and shall not be used.

Section 4E.03 Application of Pedestrian Signal Heads

Standard:

Pedestrian signal heads shall be used in conjunction with vehicular traffic control signals under any of the following conditions:

A. If a traffic control signal is justified by an engineering study and meets either Warrant 4, Pedestrian Volume or Warrant 5, School Crossing (see Chapter 4C);

B. If an exclusive signal phase is provided or made available for pedestrian movements in one or more directions, with all conflicting vehicular movements being stopped; or

C. At an established school crossing at any signalized location.

D. Where engineering judgment determines that multiphase signal indications (as with split-phase timing) would tend to confuse or cause conflicts with pedestrians using a crosswalk guided only by vehicular signal indications.

Guidance:

Pedestrian signal heads should be used under any of the following conditions:

A. If it is necessary to assist pedestrians in making a reasonably safe crossing or if engineering judgment determines that pedestrian signal heads are justified to minimize vehicle-pedestrian conflicts;

B. If pedestrians are permitted to cross a portion of a street, such as to or from a median of sufficient width for pedestrians to wait, during a particular interval but are not permitted to cross the remainder of the street during any part of the same interval; and/or

C. If no vehicular signal indications are visible to pedestrians, or if the vehicular signal indications that are visible to pedestrians starting or continuing a crossing provide insufficient guidance for them to

decide when it is reasonably safe to cross, such as on one-way streets, at T-intersections, or at multiphase signal operations.

Section 4E.04 <u>Size, Design, and Illumination of Pedestrian Signal Head Indications</u>
Standard:

All new pedestrian signal head indications shall be displayed within a rectangular background and shall consist of symbolized messages (see Figure 4E-1), except that existing pedestrian signal head indications with lettered or outline style symbol messages may be retained for the remainder of their useful service life. The symbol designs that are set forth in the "Standard Highway Signs" book shall be used. Each pedestrian signal head indication shall be independently illuminated and emit a single color.

The UPRAISED HAND (symbolizing DONT WALK) signal section shall be mounted directly above or integral with the WALKING PERSON (symbolizing WALK) signal section.

The WALKING PERSON (symbolizing WALK) signal indication shall be white, conforming to the publication entitled "Pedestrian Traffic Control Signal Indications" (see Section 1A.11), with all except the symbol obscured by an opaque material.

The UPRAISED HAND (symbolizing DONT WALK) signal indication shall be Portland orange, conforming to the publication entitled "Pedestrian Traffic Control Signal Indications" (see Section 1A.11), with all except the symbol obscured by an opaque material.

When not illuminated, the WALKING PERSON (symbolizing WALK) and UPRAISED HAND (symbolizing DONT WALK) symbols shall not be readily visible to pedestrians at the far end of the crosswalk that the pedestrian signal head indications control.

For pedestrian signal head indications, the symbols shall be at least 150 mm (6 in) high.

The light source of a flashing UPRAISED HAND (symbolizing DONT WALK) signal indication shall be flashed continuously at a rate of not less than 50 nor more than 60 times per minute. The illuminated period of each flash shall be not less than half and not more than two-thirds of the total flash cycle.

Guidance:

Pedestrian signal head indications should be conspicuous and recognizable to pedestrians at all distances from the beginning of the controlled crosswalk to a point 3 m (10 ft) from the end of the controlled crosswalk during both day and night.

For crosswalks where the pedestrian enters the crosswalk more than 30 m (100 ft) from the pedestrian signal head indications, the symbols should be at least 225 mm (9 in) high.

Option:

An animated eyes symbol may be added to a pedestrian signal head in order to prompt pedestrians to look for vehicles in the intersection during the time that the WALK signal indication is displayed.

Standard:

If used, the animated eyes symbol shall consist of an outline of a pair of white steadily-illuminated eyes with white eyeballs that scan from side to side at a rate of approximately once per second. The animated eyes symbol shall be at least 300 mm (12 in) wide with each eye having a width of at least 125 mm (5 in) and a height of at least 62 mm (2.5 in). The animated eyes symbol shall be illuminated at the start of the walk interval and shall terminate at the end of the walk interval.

Section 4E.05 <u>Location and Height of Pedestrian Signal Heads</u>
Standard:

Pedestrian signal heads shall be mounted with the bottom of the signal housing including brackets not less than 2.1 m (7 ft) nor more than 3 m (10 ft) above sidewalk level, and shall be positioned and adjusted to provide maximum visibility at the beginning of the controlled crosswalk.

If pedestrian signal heads are mounted on the same support as vehicular signal heads, there shall be a physical separation between them.

Section 4E.06 Accessible Pedestrian Signals

Support:

The primary technique that pedestrians who have visual disabilities use to cross streets at signalized locations is to initiate their crossing when they hear the traffic in front of them stop and the traffic alongside them begin to move, corresponding to the onset of the green interval. This technique is effective at many signalized locations. The existing environment is often sufficient to provide the information that pedestrians who have visual disabilities need to operate reasonably safely at a signalized location. Therefore, many signalized locations will not require any accessible pedestrian signals.

Guidance:

If a particular signalized location presents difficulties for pedestrians who have visual disabilities to cross reasonably safely and effectively, an engineering study should be conducted that considers the safety and effectiveness for pedestrians in general, as well as the information needs of pedestrians with visual disabilities.

Support:

The factors that might make crossing at a signalized location difficult for pedestrians who have visual disabilities include: increasingly quiet cars, right turn on red (which masks the beginning of the through phase), continuous right-turn movements, complex signal operations, traffic circles, and wide streets. Further, low traffic volumes might make it difficult for pedestrians who have visual disabilities to discern signal phase changes.

Local organizations, providing support services to pedestrians who have visual and/or hearing disabilities, can often act as important advisors to the traffic engineer when consideration is being given to the installation of devices to assist such pedestrians. Additionally, orientation and mobility specialists or similar staff also might be able to provide a wide range of advice. The U.S. Access Board's Document A-37, "Accessible Pedestrian Signals," provides various techniques for making pedestrian signal information available to persons with visual disabilities (see Page i for the address for the U.S. Access Board).

Accessible pedestrian signals provide information in nonvisual format (such as audible tones, verbal messages, and/or vibrating surfaces).

Information regarding detectors for accessible pedestrian signals is found in Section 4E.09.

Standard:

When used, accessible pedestrian signals shall be used in combination with pedestrian signal timing. The information provided by an accessible pedestrian signal shall clearly indicate which pedestrian crossing is served by each device.

Under stop-and-go operation, accessible pedestrian signals shall not be limited in operation by the time of day or day of week.

Guidance:

The installation of accessible pedestrian signals at signalized locations should be based on an engineering study, which should consider the following factors:

A. Potential demand for accessible pedestrian signals;
B. A request for accessible pedestrian signals;
C. Traffic volumes during times when pedestrians might be present, including periods of low traffic volumes or high turn-on-red volumes;
D. The complexity of traffic signal phasing; and
E. The complexity of intersection geometry.

Support:

Technology that provides different sounds for each nonconcurrent signal phase has frequently been found to provide ambiguous information.

Standard:

When choosing audible tones, possible extraneous sources of sounds (such as wind, rain, vehicle backup warnings, or birds) shall be considered in order to eliminate potential confusion to pedestrians who have visual disabilities.

Guidance:

Audible pedestrian tones should be carefully selected to avoid misleading pedestrians who have visual disabilities when the following conditions exist:

A. Where there is an island that allows unsignalized right turns across a crosswalk between the island and the sidewalk.

B. Where multileg approaches or complex signal phasing require more than two pedestrian phases, such that it might be unclear which crosswalk is served by each audible tone.

C. At intersections where a diagonal pedestrian crossing is allowed, or where one street receives a WALKING PERSON (symbolizing WALK) signal indication simultaneously with another street.

Standard:

When accessible pedestrian signals have an audible tone(s), they shall have a tone for the walk interval. The audible tone(s) shall be audible from the beginning of the associated crosswalk. If the tone for the walk interval is similar to the pushbutton locator tone, the walk interval tone shall have a faster repetition rate than the associated pushbutton locator tone.

Support:

A pushbutton locator tone is a repeating sound that informs approaching pedestrians that they are required to push a button to actuate pedestrian timing, and that enables visually impaired pedestrians to locate the pushbutton (see Section 4E.09).

Guidance:

The accessible walk signal tone should be no louder than the locator tone, except when there is optional activation to provide a louder signal tone for a single pedestrian phase.

Automatic volume adjustment in response to ambient traffic sound level should be provided up to a maximum volume of 89 dBA. Where automatic volume adjustment is used, tones should be no more than 5 dBA louder than ambient sound. The A-weighted sound pressure level should conform to the requirements of "ISO 1996-1:1982" and "ISO 1996-2:1987" (see Page i for the address for the International Organization for Standards).

Standard:

When verbal messages are used to communicate the pedestrian interval, they shall provide a clear message that the walk interval is in effect, as well as to which crossing it applies.

The verbal message that is provided at regular intervals throughout the timing of the walk interval shall be the term "walk sign," which may be followed by the name of the street to be crossed.

A verbal message is not required at times when the walk interval is not timing, but, if provided:

A. It shall be the term "wait."

B. It need not be repeated for the entire time that the walk interval is not timing.

Option:

Accessible pedestrian signals that provide verbal messages may provide similar messages in languages other than English, if needed, except for the terms "walk sign" and "wait."

Support:

A vibrotactile pedestrian device communicates information about pedestrian timing through a vibrating surface by touch.

Standard:

Vibrotactile pedestrian devices, where used, shall indicate that the walk interval is in effect, and for which direction it applies, through the use of a vibrating directional arrow or some other means.

Guidance:

When provided, vibrotactile pedestrian devices should be located next to, and on the same pole as, the pedestrian pushbutton, if any, and adjacent to the intended crosswalk.

Option:

New signalized intersections and planned upgrades to signalized intersections that are equipped with pedestrian crosswalks as well as the following characteristics may be considered for accessible pedestrian signals when the need and viability are confirmed by an engineering study:

a. Intersections near blind centers and senior centers

b. Transit terminals

c. T-type intersections
d. Wide intersections
e. Intersections with unusual geometry
f. Skewed intersections
g. Mid-block crosswalks
h. Intersections with exclusive phasing
i. Intersections with leading pedestrian intervals
j. Intersections with frequent side street calls, and;
k. Intersections with high turning volumes

Option:

The installation of Audible Accessible Pedestrian Signals may be considered when an engineering study and evaluation have been conducted and the following minimum conditions have been met:

a. The proposed intersection crosswalk must be signalized.
b. The audible devices should be retrofittable to the existing traffic signal hardware.
c. The signalized intersection should be equipped with pedestrian push buttons.
c. The selected crosswalk must be suitable for the installation of audible signals, in terms of surrounding land use and traffic patterns.
e. There must be a demonstrated need for the audible signals in the form of a request from an individual or group that would use the audible signal.
f. The individual or group requesting the device should agree to train the visually impaired users of the audible signals.

Guidance:

If the "Cuckoo" /"Peep-Peep" walk sound is chosen, the audible devices selected should emit a "Cuckoo" walk sound for North-South direction and a "Peep-Peep" walk sound for a crosswalk in the East-West direction.

Standard:

The tone of the walk signal shall not be similar to the push button locator tones.

Section 4E.07 <u>Countdown Pedestrian Signals</u>

Option:

A pedestrian interval countdown display may be added to a pedestrian signal head in order to inform pedestrians of the number of seconds remaining in the pedestrian change interval.

Standard:

If used, countdown pedestrian signals shall consist of Portland orange numbers that are at least 150 mm (6 in) in height on a black opaque background. The countdown pedestrian signal shall be located immediately adjacent to the associated UPRAISED HAND (symbolizing DONT WALK) pedestrian signal head indication.

If used, the display of the number of remaining seconds shall begin only at the beginning of the pedestrian change interval. After the countdown displays zero, the display shall remain dark until the beginning of the next countdown.

If used, the countdown pedestrian signal shall display the number of seconds remaining until the termination of the pedestrian change interval. Countdown displays shall not be used during the walk interval nor during the yellow change interval of a concurrent vehicular phase.

Guidance:

If used with a pedestrian signal head that does not have a concurrent vehicular phase, the pedestrian change interval (flashing UPRAISED HAND) should be set to be approximately 4 seconds less than the required pedestrian crossing time (see Section 4E.10) and an additional clearance interval (during which steady UPRAISED HAND is displayed) should be provided prior to the start of the conflicting vehicular phase. In this case, the countdown display of the number of remaining seconds should be displayed only during the display of the flashing UPRAISED HAND, should display zero at the time when the flashing UPRAISED HAND changes to steady UPRAISED HAND, and should be dark during the additional clearance interval prior to the conflicting vehicular phase.

For crosswalks where the pedestrian enters the crosswalk more than 30 m (100 ft) from the countdown pedestrian signal display, the numbers should be at least 225 mm (9 in) in height.

Because some technology includes the countdown pedestrian signal logic in a separate timing device that is independent of the timing in the traffic signal controller, care should be exercised by the engineer when timing changes are made to pedestrian change intervals.

If the pedestrian change interval is interrupted or shortened as a part of a transition into a preemption sequence (see Section 4E.10), the countdown pedestrian signal display should be discontinued and go dark immediately upon activation of the preemption transition.

Section 4E.08 <u>Pedestrian Detectors</u>

Guidance:

When pedestrian actuation is used, pedestrian pushbutton detectors should be capable of easy activation and conveniently located near each end of the crosswalks.

Standard:

Signs (see Section 2B.44) shall be mounted adjacent to or integral with pedestrian pushbutton detectors, explaining their purpose and use.

Option:

At certain locations, a sign in a more visible location may be used to call attention to the pedestrian detector.

Guidance:

If two crosswalks, oriented in different directions, end at or near the same location, the positioning of pedestrian detectors and/or the legends on the pedestrian detector signs should clearly indicate which crosswalk signal is actuated by each pedestrian detector.

Standard:

If the pedestrian clearance time is sufficient only to cross from the curb or shoulder to a median of sufficient width for pedestrians to wait and the signals are pedestrian actuated, an additional pedestrian detector shall be provided in the median.

Guidance:

The use of additional pedestrian detectors on islands or medians where a pedestrian might become stranded should be considered.

A mounting height of approximately 1.1 m (3.5 ft) above the sidewalk should be used for pedestrian pushbutton detectors.

If used, special purpose pushbuttons (to be operated only by authorized persons) should include a housing capable of being locked to prevent access by the general public and do not need an instructional sign.

Standard:

If used, a pilot light or other means of indication installed with a pedestrian pushbutton shall not be illuminated until actuation. Once it is actuated, it shall remain illuminated until the pedestrian's green or WALKING PERSON (symbolizing WALK) signal indication is displayed.

Option:

At signalized locations with a demonstrated need and subject to equipment capabilities, pedestrians with special needs may be provided with additional crossing time by means of an extended pushbutton press.

Section 4E.09 <u>Accessible Pedestrian Signal Detectors</u>

Standard:

An accessible pedestrian signal detector shall be defined as a device designated to assist the pedestrian who has visual or physical disabilities in activating the pedestrian phase.

At accessible pedestrian signal locations with pedestrian actuation, each pushbutton shall activate both the walk interval and the accessible pedestrian signals.

Option:

Accessible pedestrian signal detectors may be pushbuttons or passive detection devices.

Pushbutton locator tones may be used with accessible pedestrian signals.

Guidance:

At accessible pedestrian signal locations, pushbuttons should clearly indicate which crosswalk signal is actuated by each pushbutton. Pushbuttons and tactile arrows should have high visual contrast as described in the "Americans with Disabilities Act Accessibility Guidelines for Buildings and Facilities (ADAAG)" (see Section 1A.11). Tactile arrows should point in the same direction as the associated crosswalk. At corners of signalized locations with accessible pedestrian signals where two pedestrian pushbuttons are provided, the pushbuttons should be separated by a distance of at least 3 m (10 ft). This enables pedestrians who have visual disabilities to distinguish and locate the appropriate pushbutton.

Pushbuttons for accessible pedestrian signals should be located (see Figure 4E-2) as follows:

A. Adjacent to a level all-weather surface to provide access from a wheelchair, and where there is an all-weather surface, wheelchair accessible route to the ramp;
B. Within 1.5 m (5 ft) of the crosswalk extended boundaries;
C. Within 3 m (10 ft) of the edge of the curb, shoulder, or pavement; and
D. Parallel to the crosswalk to be used.

If the pedestrian clearance time is sufficient only to cross from the curb or shoulder to a median of sufficient width for pedestrians to wait and accessible pedestrian detectors are used, an additional accessible pedestrian detector should be provided in the median.

Standard:

When used, pushbutton locator tones shall be easily locatable, shall have a duration of 0.15 seconds or less, and shall repeat at 1-second intervals.

Guidance:

Pushbuttons should be audibly locatable. Pushbutton locator tones should be intensity responsive to ambient sound, and be audible 1.8 to 3.7 m (6 to 12 ft) from the pushbutton, or to the building line, whichever is less. Pushbutton locator tones should be no more than 5 dBA louder than ambient sound.

Pushbutton locator tones should be deactivated during flashing operation of the traffic control signal.

Option:

At locations with pretimed traffic control signals or nonactuated approaches, pedestrian pushbuttons may be used to activate the accessible pedestrian signals.

The audible tone(s) may be made louder (up to a maximum of 89 dBA) by holding down the pushbutton for a minimum of 3 seconds. The louder audible tone(s) may also alternate back and forth across the crosswalk, thus providing optimal directional information.

The name of the street to be crossed may also be provided in accessible format, such as Braille or raised print.

Section 4E.10 Pedestrian Intervals and Signal Phases

Standard:

When pedestrian signal heads are used, a WALKING PERSON (symbolizing WALK) signal indication shall be displayed only when pedestrians are permitted to leave the curb or shoulder.

A pedestrian clearance time shall begin immediately following the WALKING PERSON (symbolizing WALK) signal indication. The first portion of the pedestrian clearance time shall consist of a pedestrian change interval during which a flashing UPRAISED HAND (symbolizing DONT WALK) signal indication shall be displayed. The remaining portions shall consist of the yellow change interval and any red clearance interval (prior to a conflicting green being displayed), during which a flashing or steady UPRAISED HAND (symbolizing DONT WALK) signal indication shall be displayed.

If countdown pedestrian signals are used, a steady UPRAISED HAND (symbolizing DONT WALK) signal indication shall be displayed during the yellow change interval and any red clearance interval (prior to a conflicting green being displayed) (see Section 4E.07).

At intersections equipped with pedestrian signal heads, the pedestrian signal indications shall be displayed except when the vehicular traffic control signal is being operated in the flashing mode. At those times, the pedestrian signal lenses shall not be illuminated.

Guidance:

Except as noted in the Option, the walk interval should be at least 7 seconds in length so that pedestrians will have adequate opportunity to leave the curb or shoulder before the pedestrian clearance time begins.

Option:

If pedestrian volumes and characteristics do not require a 7-second walk interval, walk intervals as short as 4 seconds may be used.

Support:

The walk interval itself need not equal or exceed the pedestrian clearance time calculated for the roadway width, because many pedestrians will complete their crossing during the pedestrian clearance time.

Guidance:

The pedestrian clearance time should be sufficient to allow a pedestrian crossing in the crosswalk who left the curb or shoulder during the WALKING PERSON (symbolizing WALK) signal indication to travel at a walking speed of 1.2 m (4 ft) per second, to at least the far side of the traveled way or to a median of sufficient width for pedestrians to wait. Where pedestrians who walk slower than 1.2 m (4 ft) per second, or pedestrians who use wheelchairs, routinely use the crosswalk, a walking speed of less than 1.2 m (4 ft) per second should be considered in determining the pedestrian clearance time.

Option:

Where older or disabled pedestrians routinely use the crosswalk, a walking speed of 0.85 m (2.8 ft) per second may be used in determining the pedestrian clearance time.

Passive pedestrian detection equipment, which can detect pedestrians who need more time to complete their crossing and can extend the length of the pedestrian clearance time for that particular cycle, may be used in order to avoid using a lower walking speed to determine the pedestrian clearance time.

Guidance:

Where the pedestrian clearance time is sufficient only for crossing from the curb or shoulder to a median of sufficient width for pedestrians to wait, additional measures should be considered, such as median-mounted pedestrian signals or additional signing.

Option:

The pedestrian clearance time may be entirely contained within the vehicular green interval, or may be entirely contained within the vehicular green and yellow change intervals.

On a street with a median of sufficient width for pedestrians to wait, a pedestrian clearance time that allows the pedestrian to cross only from the curb or shoulder to the median may be provided.

During the transition into preemption, the walk interval and the pedestrian change interval may be shortened or omitted as described in Section 4D.13.

At intersections with high pedestrian volumes, high turning-vehicle volumes, and no turn on red (NTOR) control for traffic moving parallel to a marked crosswalk, a leading pedestrian interval (LPI), timed to allow slower walkers to cross at least one moving lane of traffic may be used to reduce conflicts between pedestrians and turning vehicles.

Section 4E.101(CA) Financing

Standard:

The cost of installing and maintaining Audible Pedestrian Signals shall be shared with the local agency in the same manner as a traffic signal. See Section 4B.104(CA).

(This space left intentionally blank)

Figure 4E-1. Typical Pedestrian Signal Indications

One Section

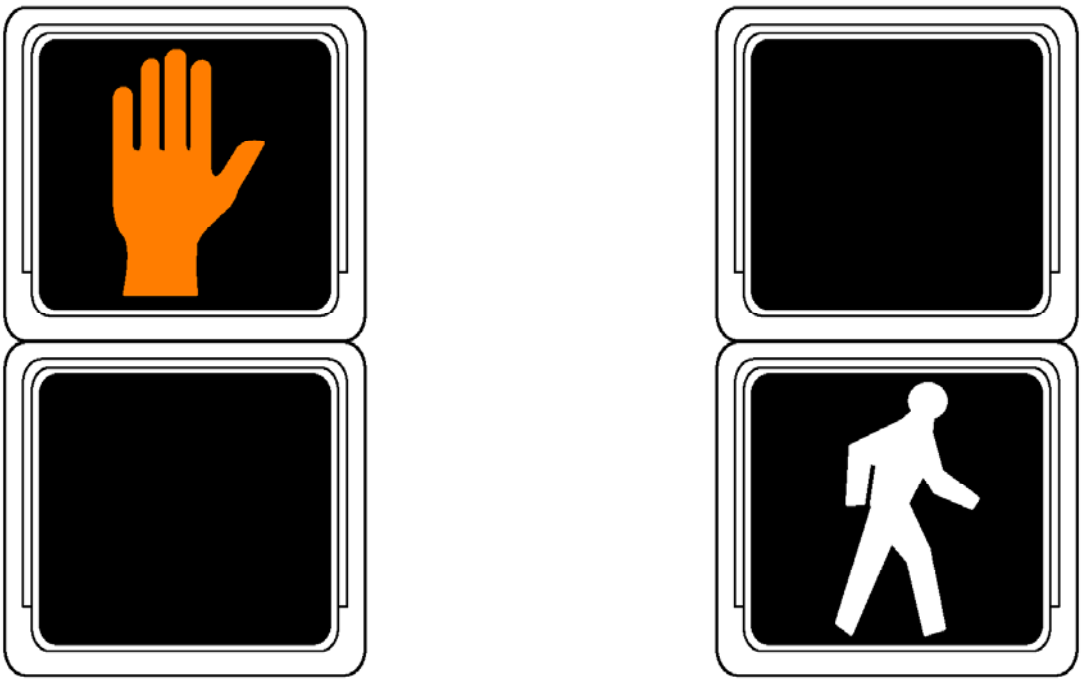

Two Section

Figure 4E-2. Recommended Pushbutton Locations for Accessible Pedestrian Signals

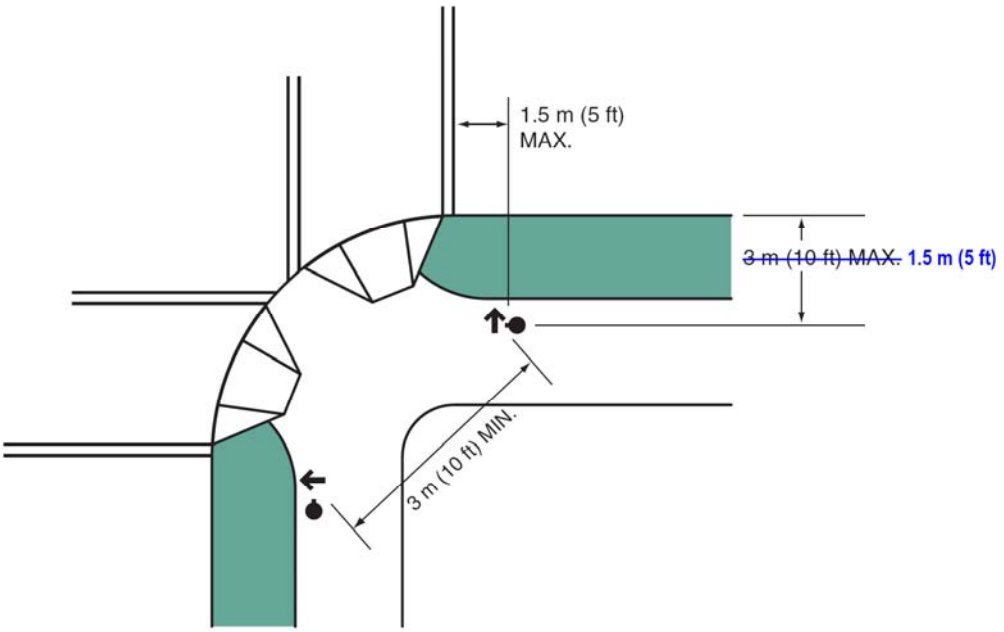

Two Curb-Cut Ramps

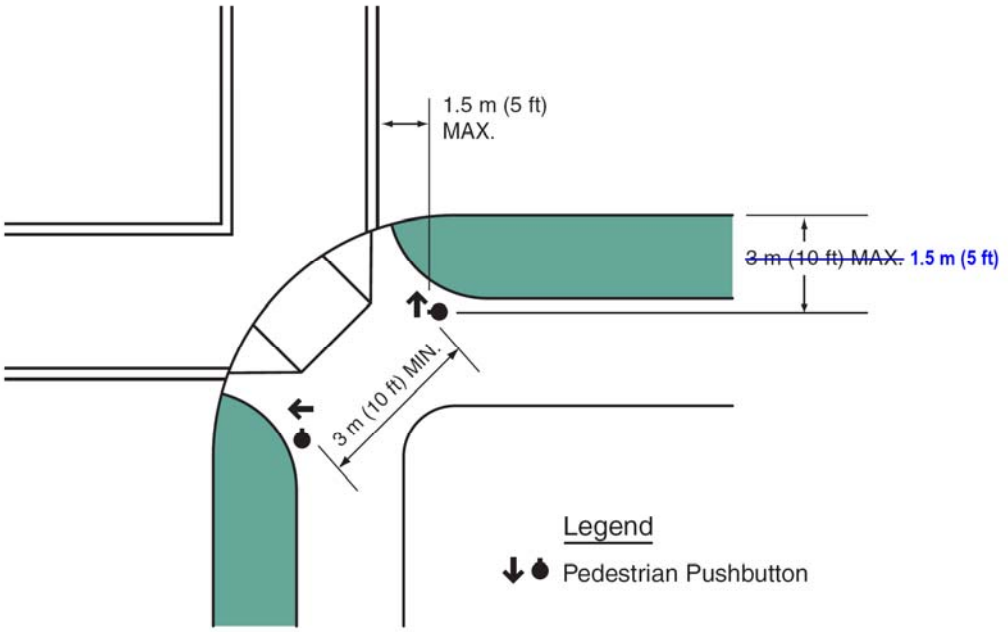

One Curb-Cut Ramp

CHAPTER 4F. TRAFFIC CONTROL SIGNALS FOR EMERGENCY VEHICLE ACCESS

Section 4F.01 Applications of Emergency-Vehicle Traffic Control Signals

Support:

An emergency-vehicle traffic control signal is a special traffic control signal that assigns the right-of-way to an authorized emergency vehicle.

Option:

An emergency-vehicle traffic control signal may be installed at a location that does not meet other traffic signal warrants such as at an intersection or other location to permit direct access from a building housing the emergency vehicle.

Guidance:

If a traffic control signal is not justified under the signal warrants of Chapter 4C and if gaps in traffic are not adequate to permit reasonably safe entrance of emergency vehicles, or the stopping sight distance for vehicles approaching on the major street is insufficient to permit reasonably safe entrance of emergency vehicles, installing an emergency-vehicle traffic control signal should be considered. If one of the signal warrants of Chapter 4C is met and a traffic control signal is justified by an engineering study, and if a decision is made to install a traffic control signal, it should be installed based upon the provisions of Chapter 4D.

The sight distance determination should be based on the location of the visibility obstruction for the critical approach lane for each street or drive and the posted or statutory speed limit or 85th-percentile speed on the major street, whichever is higher.

Section 4F.02 Design of Emergency-Vehicle Traffic Control Signals

Standard:

Except as specified in this Section, an emergency-vehicle traffic control signal shall meet the requirements of this Manual.

An Emergency Vehicle (W11-8) sign (see Section 2C.40) with an EMERGENCY SIGNAL AHEAD (W11-12p) supplemental plaque shall be placed in advance of all emergency-vehicle traffic control signals. If a warning beacon is installed to supplement the W11-8 sign, the design and location of the beacon shall conform to the Standards specified in Sections 4K.01 and 4K.03.

Guidance:

At least one of the two required signal faces for each approach on the major street should be located over the roadway.

The following size signal lenses should be used for emergency-vehicle traffic control signals: 300 mm (12 in) diameter for red and steady yellow signal indications, and 200 mm (8 in) diameter for flashing yellow or steady green signal indications.

Standard:

An EMERGENCY SIGNAL (R10-13) sign shall be mounted adjacent to a signal face on each major street approach (see Section 2B.45). If an overhead signal face is provided, the EMERGENCY SIGNAL sign shall be mounted adjacent to the overhead signal face.

Option:

An approach that only serves emergency vehicles may be provided with only one signal face consisting of one or more signal sections.

Besides using a 200 mm (8 in) diameter signal indication, other appropriate means to reduce the flashing yellow light output may be used.

Section 4F.03 Operation of Emergency-Vehicle Traffic Control Signals

Standard:

Right-of-way for emergency vehicles at signalized locations operating in the steady (stop-and-go) mode shall be obtained as specified in Section 4D.13.

As a minimum, the signal indications, sequence, and manner of operation of an emergency-vehicle traffic control signal installed at a midblock location shall be as follows:

A. The signal indication, between emergency-vehicle actuations, shall be either steady green or flashing yellow. If the flashing yellow signal indication is used instead of the steady green signal indication, it shall be displayed in the normal position of the steady green signal indication, while the red and steady yellow signal indications shall be displayed in their normal positions.

B. When an emergency vehicle actuation occurs, a steady yellow change interval followed by a steady red interval shall be displayed to traffic on the major street.

C. A yellow change interval is not required following the green interval for the emergency-vehicle driveway.

Emergency-vehicle traffic control signals located at intersections shall either be operated in the flashing mode between emergency-vehicle actuations (see Section 4D.12) or be fully or semi-traffic-actuated, to accommodate normal vehicular and pedestrian traffic on the streets.

Warning beacons, if used with an emergency-vehicle traffic control signal, shall be flashed only:

A. For an appropriate time in advance of and during the steady yellow change interval for the major street; and

B. During the steady red interval for the major street.

Guidance:

The duration of the red interval for traffic on the major street should be determined by on-site test-run time studies, but should not exceed 1.5 times the time required for the emergency vehicle to clear the path of conflicting vehicles.

Option:

An emergency-vehicle traffic control signal sequence may be initiated manually from a local control point such as a fire station or law enforcement headquarters or from an emergency vehicle equipped for remote operation of the signal.

(This space left intentionally blank)

CHAPTER 4G. TRAFFIC CONTROL SIGNALS FOR ONE-LANE, TWO-WAY FACILITIES

Section 4G.01 Application of Traffic Control Signals for One-Lane, Two-Way Facilities

Support:

A traffic control signal at a narrow bridge, tunnel, or roadway section is a special signal that assigns the right-of-way for vehicles passing over a bridge or through a tunnel or roadway section that is not of sufficient width for two opposing vehicles to pass reasonably safely.

Temporary traffic control signals (see Sections 4D.20 and 6F.80) are the most frequent application of one-lane, two-way facilities.

Guidance:

Sight distance across or through the one-lane, two-way facility should be considered as well as the approach speed and sight distance approaching the facility when determining whether traffic control signals should be installed.

Option:

At a narrow bridge, tunnel, or roadway section where a traffic control signal is not justified under the conditions of Chapter 4C, a traffic control signal may be used if gaps in opposing traffic do not permit the reasonably safe flow of traffic through the one-lane section of roadway.

Section 4G.02 Design of Traffic Control Signals for One-Lane, Two-Way Facilities

Standard:

The provisions of Chapter 4D shall apply to traffic control signals for one-lane, two-way facilities, except that:

A. Durations of red clearance intervals shall be adequate to clear the one-lane section of conflicting vehicles.

B. Adequate means, such as interconnection, shall be provided to prevent conflicting signal indications, such as green and green, at opposite ends of the section.

Section 4G.03 Operation of Traffic Control Signals for One-Lane, Two-Way Facilities

Standard:

Traffic control signals at one-lane, two-way facilities shall operate in a manner consistent with traffic requirements.

When in the flashing mode, the signal indications shall flash red.

Guidance:

Adequate time should be provided to allow traffic to clear the narrow facility before opposing traffic is allowed to move. Engineering judgment should be used to determine the proper timing for the signal.

(This space left intentionally blank)

(This page left intentionally blank)

CHAPTER 4H. TRAFFIC CONTROL SIGNALS FOR FREEWAY ENTRANCE RAMPS

Section 4H.01 Application of Freeway Entrance Ramp Control Signals

Support:

Ramp control signals are traffic control signals that control the flow of traffic entering the freeway facility.

Freeway entrance ramp control signals are sometimes used if controlling traffic entering the freeway could reduce the total expected delay to traffic in the freeway corridor, including freeway ramps and local streets, and if at least one of the following conditions is present:

A. Congestion recurs on the freeway because traffic demand is in excess of the capacity, or congestion recurs or a high frequency of crashes exist at the freeway entrance because of inadequate ramp merging area. A good indicator of recurring freeway congestion is freeway operating speeds less than 80 km/h (50 mph) occurring regularly for at least a half-hour period. Freeway operating speeds less than 50 km/h (30 mph) for a half-hour period or more would indicate severe congestion.

B. Controlling traffic entering a freeway assists in meeting local transportation system management objectives identified for freeway traffic flow, such as the following:
   1. Maintenance of a specific freeway level of service.
   2. Priority treatments with higher levels of service for mass transit and carpools.
   3. Redistribution of freeway access demand to other on-ramps.

C. Predictable, sporadic congestion occurs on isolated sections of freeway because of short-period peak traffic loads from special events or from severe peak loads of recreational traffic.

Guidance:

The installation of ramp control signals should be preceded by an engineering study of the physical and traffic conditions on the highway facilities likely to be affected. The study should include the ramps and ramp connections and the surface streets that would be affected by the ramp control, as well as the freeway section concerned. Types of traffic data that should be obtained include, but are not limited to, traffic volumes, traffic crashes, freeway operating speeds, and travel time and delay on the freeway, approaches, ramps, and alternate surface routes.

Capacities and demand/capacity relationships should be determined for each freeway section. The locations and causes of capacity restrictions and those sections where demand exceeds capacity should be identified. From these and other data, estimates should be made of desirable metering rates, probable reductions in the delay of freeway traffic, likely increases in delay to ramp traffic, and the potential impact on surface streets. The study should include an evaluation of the ramp's storage capacities for vehicles delayed at the signal, the impact of queued traffic on the local street intersection, and the availability of suitable alternate surface routes having adequate capacity to accommodate any additional traffic volume.

Before installing ramp control signals, consideration should be given to their potential acceptance by the public and the requirements for enforcing ramp control, as well as alternate means of increasing the capacity, reducing the demand, or improving the characteristics of the freeway.

Section 4H.02 Design of Freeway Entrance Ramp Control Signals

Standard:

Ramp control signals shall meet all of the standard design specifications for traffic control signals, except as noted herein:

A. The signal face for freeway entrance ramp control signals shall be either a two-lens signal face containing red and green signal lenses or a three-lens signal face containing red, yellow, and green signal lenses.

B. A minimum of two signal faces per ramp shall face entering traffic.

C. Ramp control signal faces need not be illuminated when not in use.

Ramp control signals shall be located and designed to minimize their viewing by mainline freeway traffic.

Option:

The required signal faces, if located at the side of the ramp roadway, may be mounted such that the height above the pavement grade at the center of the ramp roadway to the bottom of the signal housing of the lowest signal face is between 1.4 m (4.5 ft) and 1.8 m (6 ft).

(This space left intentionally blank)

CHAPTER 4I. TRAFFIC CONTROL FOR MOVABLE BRIDGES

Section 4I.01 Application of Traffic Control for Movable Bridges

Support:

Traffic control signals for movable bridges are a special type of highway traffic signal installed at movable bridges to notify road users to stop because of a road closure rather than alternately giving the right-of-way to conflicting traffic movements. The signals are operated in coordination with the opening and closing of the movable bridge, and with the operation of movable bridge warning and resistance gates, or other devices and features used to warn, control, and stop traffic.

Movable bridge warning gates installed at movable bridges decrease the likelihood of vehicles and pedestrians passing the stop line and entering an area where potential hazards exist because of bridge operations.

A movable bridge resistance gate is sometimes used at movable bridges and located downstream of the movable bridge warning gate. A movable bridge resistance gate provides a physical deterrent to road users when placed in the appropriate position. The movable bridge resistance gates are considered a design feature and not a traffic control device; requirements for them are contained in AASHTO's "Standard Specifications for Movable Highway Bridges" (see Page i for AASHTO's address).

Standard:

Traffic control at movable bridges shall include both signals and gates, except in the following cases:

A. Neither is required if other traffic control devices or measures considered appropriate are used under either of the following conditions:
   1. On low-volume roads (roads of less than 400 vehicles average daily traffic); or
   2. At manually operated bridges if electric power is not available.

B. Only signals are required in urban areas if intersecting streets or driveways make gates ineffective.

C. Only movable bridge warning gates are required if a traffic control signal that is controlled as part of the bridge operations exists within 150 m (500 ft) of the movable bridge resistance gates and no intervening traffic entrances exist.

Section 4I.02 Design and Location of Movable Bridge Signals and Gates

Standard:

The signal heads and mountings of movable bridge signals shall follow the provisions of Chapter 4D except as noted in this Section.

Since movable bridge operations cover a variable range of time periods between openings, the signal faces shall be one of the following types:

A. Three-section signal faces with red, yellow, and green signal lenses; or

B. Two one-section signal faces with red signal lenses in a vertical array separated by a STOP HERE ON RED (R10-6) sign (see Section 2B.45).

Regardless of which signal type is selected, two signal faces shall be provided for each approach to the movable span.

Guidance:

If movable bridge operation is frequent, the use of three-section signal faces should be considered.

Standard:

If physical conditions prevent a road user from having a continuous view of at least two signal indications for the distance specified in Table 4D-1, an auxiliary device (either a supplemental signal face or the mandatory DRAWBRIDGE AHEAD warning sign to which has been added a warning beacon that is interconnected with the movable bridge controller unit) shall be provided in advance of movable bridge signals and gates.

A DRAWBRIDGE AHEAD warning sign shall be used in advance of movable bridge signals and gates to give warning to road users, except in urban conditions where such signing would not be practical.

Movable bridge warning gates, if used, shall extend at least across the full width of the approach lanes if movable bridge resistance gates are used. On divided highways in which the roadways are separated by a barrier median, movable bridge warning gates, if used, shall extend across all roadway lanes approaching the span openings. Except where physical conditions make it impractical, movable bridge warning gates shall be located 30 m (100 ft) or more from the movable bridge resistance gates or, if movable bridge resistance gates are not used, 30 m (100 ft) or more from the movable span.

Movable bridge warning gates shall be at least standard railroad size, striped with 400 mm (16 in) alternate diagonal, fully reflectorized red and white stripes. Flashing red lights in accordance with the Standards for those on railroad gates (see Section 8D.04) shall be included on the gate arm and they shall only be operated if the gate is closed or in the process of being opened or closed. In the horizontal position, the top of the gate shall be approximately 1.2 m (4 ft) above the pavement.

If two sets of gates (both a warning and a resistance gate) are used for a single direction, highway traffic signals need not accompany the resistance gate nearest the span opening, but there shall be flashing red lights on the movable bridge warning gate.

Guidance:

Signal faces with 300 mm (12 in) diameter signal lenses should be used for movable bridge signals.

Insofar as practical, the height and lateral placement of signal faces should conform to the requirements for other traffic control signals in accordance with Section 4D.15. They should be located not more than 15 m (50 ft) in advance of the movable bridge warning gate.

Movable bridge warning gates should be of lightweight construction. In its normal upright position, the gate arm should provide adequate lateral clearance. If the movable bridge is close to a highway-rail grade crossing and traffic might possibly be stopped on the crossing as a result of the bridge opening, a traffic control device should notify the road users to not stop on the railroad tracks.

If movable bridge resistance gates are not used on undivided highways, movable bridge warning gates, if used, should extend across the full width of the roadway.

On bridges or causeways that cross a long reach of water and that might be hit by large marine vessels, within the limits of practicality, traffic should not be halted on a section of the bridge or causeway that is subject to impact.

In cases where it is not practical to halt traffic on a span that is not subject to impact, traffic should be halted at least one span from the opening. If traffic is halted by signals and gates more than 100 m (330 ft) from the movable bridge warning gates (or from the span opening if movable bridge warning gates are not used), a second set of gates should be installed approximately 30 m (100 ft) from the gate or span opening.

Option:

Movable bridge signals may be supplemented with audible warning devices to provide additional warning to drivers and pedestrians.

If prevailing approach speeds are 40 km/h (25 mph) or less, signal heads with 200 mm (8 in) diameter lenses may be used.

The movable bridge resistance gates may be delineated, if practical, in a manner similar to the movable bridge warning gate.

The DRAWBRIDGE AHEAD sign may be supplemented by a Warning Beacon (see Section 4K.03).

A single full-width gate or two half-width gates may be used.

Support:

Highway traffic signals need not accompany the gates nearest the span opening.

The locations of movable bridge signals and gates are determined by the location of the movable bridge resistance gate (if used) rather than by the location of the movable spans. The movable bridge resistance gates for high-speed highways are preferably located 15 m (50 ft) or more from the span opening except for bascule and lift bridges, where they are often attached to, or are a part of, the structure.

Section 4I.03 <u>Operation of Movable Bridge Signals and Gates</u>

Standard:

Traffic control devices at movable bridges shall be coordinated with the movable spans, so that the signals, gates, and movable spans are controlled by the bridge tender through an interlocked control.

If the three-section type of signal face is used, the green signal indication shall be illuminated at all times between bridge openings, except that if the bridge is not expected to open during continuous periods in excess of 5 hours, a flashing yellow signal indication may be used. The signal shall display a steady red signal indication when traffic is required to stop. The duration of the yellow change interval between the display of the steady green and steady red signal indications, or flashing yellow and steady red signal indications, shall be predetermined.

If the vertical array of red signal lenses is the type of signal face selected, the red signal lenses shall flash alternately only when traffic is required to stop.

Guidance:

The duration of the yellow change interval should have a range from 3 to 6 seconds.

Signals on adjacent streets and highways should be interconnected with the drawbridge control if indicated by engineering judgment.

(This space left intentionally blank)

(This page left intentionally blank)

CHAPTER 4J. LANE-USE CONTROL SIGNALS

Section 4J.01 Application of Lane-Use Control Signals

Support:

Lane-use control signals are special overhead signals that permit or prohibit the use of specific lanes of a street or highway or that indicate the impending prohibition of their use. Lane-use control signals are distinguished by placement of special signal faces over a certain lane or lanes of the roadway and by their distinctive shapes and symbols. Supplementary signs are sometimes used to explain their meaning and intent.

Lane-use control signals are most commonly used for reversible-lane control, but are also used in nonreversible freeway lane applications.

Guidance:

An engineering study should be conducted to determine whether a reversible-lane operation can be controlled satisfactorily by static signs (see Section 2B.25) or whether lane-use control signals are necessary. Lane-use control signals should be used to control reversible-lane operations if any of the following conditions are present:

A. More than one lane is reversed in direction;

B. Two-way or one-way left turns are allowed during peak-period reversible operations, but those turns are from a different lane than used during off-peak periods;

C. Other unusual or complex operations are included in the reversible-lane pattern;

D. Demonstrated crash experience occurring with reversible-lane operation controlled by static signs that can be corrected by using lane-use control signals at the times of transition between peak and off-peak patterns; and/or

E. An engineering study indicates that safer and more efficient operation of a reversible-lane system would be provided by lane-use control signals.

Option:

Lane-use control signals also may be used for reversible-lane operations at toll booths. They may also be used if there is no intent or need to reverse lanes, including:

A. On a freeway, if it is desired to keep traffic out of certain lanes at certain hours to facilitate the merging of traffic from a ramp or other freeway;

B. On a freeway, near its terminus, to indicate a lane that ends; and

C. On a freeway or long bridge, to indicate that a lane may be temporarily blocked by a crash, breakdown, construction or maintenance activities, and so forth.

Section 4J.02 Meaning of Lane-Use Control Signal Indications

Standard:

The meanings of lane-use control signal indications are as follows:

A. A steady DOWNWARD GREEN ARROW signal indication shall mean that a road user is permitted to drive in the lane over which the arrow signal indication is located.

B. A steady YELLOW X signal indication shall mean that a road user is to prepare to vacate, in a reasonably safe manner, the lane over which the signal indication is located because a lane control change is being made to a steady RED X signal indication.

C. A steady WHITE TWO-WAY LEFT-TURN ARROW signal indication (see Figure 4J-1) shall mean that a road user is permitted to use a lane over which the signal indication is located for a left turn, but not for through travel, with the understanding that common use of the lane by oncoming road users for left turns is also permitted.

D. A steady WHITE ONE WAY LEFT-TURN ARROW signal indication (see Figure 4J-1) shall mean that a road user is permitted to use a lane over which the signal indication is located for a left turn (without opposing turns in the same lane), but not for through travel.

E. A steady RED X signal indication shall mean that a road user is not permitted to use the lane over which the signal indication is located and that this signal indication shall modify accordingly the meaning of all other traffic controls present. The road user shall obey all other traffic controls and follow normal safe driving practices.

Pavement markings (see Section 3B.03) shall be used in conjunction with reversible-lane control signals.

Section 4J.03 <u>Design of Lane-Use Control Signals</u>
Standard:

All lane-use control signal indications shall be in units with rectangular signal faces and shall have opaque backgrounds. Nominal minimum height and width of each DOWNWARD GREEN ARROW, YELLOW X, and RED X signal face shall be 450 mm (18 in) for typical applications. The WHITE TWO-WAY LEFT-TURN ARROW and WHITE ONE WAY LEFT-TURN ARROW signal faces shall have a nominal minimum height and width of 750 mm (30 in).

Each lane to be reversed or closed shall have signal faces with a DOWNWARD GREEN ARROW and a RED X symbol.

Each reversible lane that also operates as a two-way or one-way left-turn lane during certain periods shall have signal faces that also include the applicable WHITE TWO-WAY LEFT-TURN ARROW or WHITE ONE WAY LEFT-TURN ARROW symbol.

Each nonreversible lane immediately adjacent to a reversible lane shall have signal indications that display a DOWNWARD GREEN ARROW to traffic traveling in the permitted direction and a RED X to traffic traveling in the opposite direction.

If in separate signal sections, the relative positions, from left to right, of the signal indications shall be RED X, YELLOW X, DOWNWARD GREEN ARROW, WHITE TWO-WAY LEFT-TURN ARROW, WHITE ONE WAY LEFT-TURN ARROW.

The color of lane-use control signal indications shall be clearly visible for 700 m (2,300 ft) at all times under normal atmospheric conditions, unless otherwise physically obstructed.

Lane-use control signal faces shall be located approximately over the center of the lane controlled.

If the area to be controlled is more than 700 m (2,300 ft) in length, or if the vertical or horizontal alignment is curved, intermediate lane-use control signal faces shall be located over each controlled lane at frequent intervals. This location shall be such that road users will at all times be able to see at least one signal indication and preferably two along the roadway, and will have a definite indication of the lanes specifically reserved for their use.

All lane-use control signal faces shall be located in a straight line across the roadway approximately at right angles to the roadway alignment.

The bottom of the signal housing of any lane-use control signal face shall be at least 4.6 m (15 ft) but not more than 5.8 m (19 ft) above the pavement grade.

On roadways having intersections controlled by traffic control signals, the lane-use control signal face shall be located sufficiently far in advance of or beyond such traffic control signals to prevent them from being misconstrued as traffic control signals.

Option:

In areas with minimal visual clutter and with speeds of less than 70 km/h or less than 40 mph, lane-use control signal faces with nominal height and width of 300 mm (12 in) may be used for the DOWNWARD GREEN ARROW, YELLOW X, and RED X signal faces, and lane-use control signal faces with nominal height and width of 450 mm (18 in) may be used for the WHITE TWO-WAY LEFT-TURN ARROW and WHITE ONE-WAY LEFT-TURN ARROW signal faces.

Other sizes of lane-use control signal faces larger than 450 mm (18 in) with message recognition distances appropriate to signal spacing may be used for the DOWNWARD GREEN ARROW, YELLOW X, and RED X signal faces.

Nonreversible lanes not immediately adjacent to a reversible lane on any street so controlled may also be provided with signal indications that display a DOWNWARD GREEN ARROW to traffic traveling in the permitted direction and a RED X to traffic traveling in the opposite direction.

The signal indications provided for each lane may be in separate signal sections or may be superimposed in the same signal section.

Guidance:

The RED X lane-use control signal face and the downward pointing green arrow symbol should consist of a stroke width of 38 mm (1.5 in.).

Section 4J.04 <u>Operation of Lane-Use Control Signals</u>

Standard:

All lane-use control signals shall be coordinated so that all the signal indications along the controlled section of roadway are operated uniformly and consistently. The lane-use control signal system shall be designed to reliably guard against showing any prohibited combination of signal indications to any traffic at any point in the controlled lanes.

For reversible-lane control signals, the following combination of signal indications shall not be shown simultaneously over the same lane to both directions of travel:

A. DOWNWARD GREEN ARROW in both directions;
B. YELLOW X in both directions;
C. WHITE ONE WAY LEFT-TURN ARROW in both directions;
D. DOWNWARD GREEN ARROW in one direction and YELLOW X in the other direction;
E. WHITE TWO-WAY LEFT-TURN ARROW or WHITE ONE WAY LEFT-TURN ARROW in one direction and DOWNWARD GREEN ARROW in the other direction;
F. WHITE TWO-WAY LEFT-TURN ARROW in one direction and WHITE ONE WAY LEFT-TURN ARROW in the other direction; and
G. WHITE ONE WAY LEFT-TURN ARROW in one direction and YELLOW X in the other direction.

A moving condition in one direction shall be terminated either by the immediate display of a RED X signal indication or by a YELLOW X signal indication followed by a RED X signal indication. In either case, the duration of the RED X signal indication shall be sufficient to allow clearance of the lane before any moving condition is allowed in the opposing direction.

Whenever a DOWNWARD GREEN ARROW signal indication is changed to a WHITE TWO-WAY LEFT-TURN ARROW signal indication, the RED X signal indication shall continue to be displayed to the opposite direction of travel for an appropriate duration to allow traffic time to vacate the lane being converted to a two-way left-turn lane.

If an automatic control system is used, a manual control to override the automatic control shall be provided.

Guidance:

The type of control provided for reversible-lane operation should be such as to permit either automatic or manual operation of the lane-use control signals.

Standard:

If used, lane-use control signals shall be operated continuously, except that lane-use control signals that are used only for special events or other infrequent occurrences and lane-use control signals on nonreversible freeway lanes may be darkened when not in operation. The change from normal operation to nonoperation shall occur only when the lane-use control signals display signal indications that are appropriate for the lane use that applies when the signals are not operated. The lane-use control signals shall display signal indications that are appropriate for the existing lane use when changed from nonoperation to normal operations. Also, traffic control devices shall clearly indicate the proper lane use when the lane control signals are not in operation.

Support:

Section 2B.25 contains additional information concerning considerations involving left-turn prohibitions in conjunction with reversible-lane operations.

Figure 4J-1. Left-Turn Lane-Use Control Signals

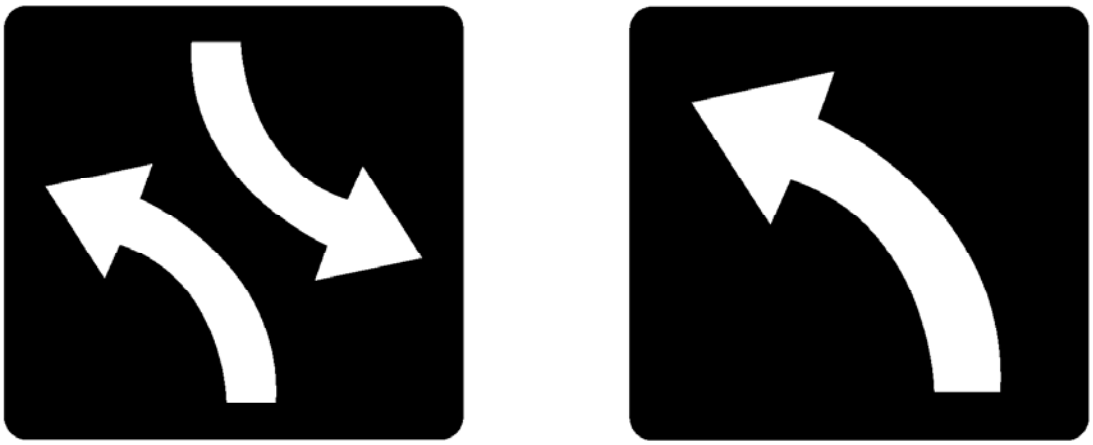

Two-way left-turn arrow

One-way left-turn arrow

White arrows on opaque background
750 x 750 mm
(30 x 30 in)

(This space left intentionally blank)

CHAPTER 4K. FLASHING BEACONS

Section 4K.01 General Design and Operation of Flashing Beacons

Support:

A Flashing Beacon is a highway traffic signal with one or more signal sections that operates in a flashing mode. It can provide traffic control when used as an intersection control beacon or warning in alternative uses.

Standard:

Flashing Beacon units and their mountings shall follow the provisions of Chapter 4D, except as specified herein.

Beacons shall be flashed at a rate of not less than 50 nor more than 60 times per minute. The illuminated period of each flash shall not be less than one-half and not more than two-thirds of the total cycle.

Guidance:

If used to supplement a warning or regulatory sign, the edge of the beacon signal housing should normally be located no closer than 300 mm (12 in) outside of the nearest edge of the sign.

Option:

An automatic dimming device may be used to reduce the brilliance of flashing yellow signal indications during night operation.

Support:

Typical applications for flashing beacons include the following:

1. Signal Ahead
2. Stop Signs
3. Speed Limit Signs
4. Other Warning and Regulatory Signs
5. Schools
6. Fire Stations
7. Intersection Control
8. Freeway Bus Stops
9. At Intersections Where a More Visible Warning is Desired.

Typical uses include:

1. Obstructions in or immediately adjacent to the roadway.
2. Supplemental to advance warning signs.
3. At mid-block crosswalks.
4. At intersections where a warning is appropriate.

Option:

Only warning, regulatory or construction signs may be supplemented by flashing beacons.

Section 4K.02 Intersection Control Beacon

Standard:

An Intersection Control Beacon shall consist of one or more signal faces directed toward each approach to an intersection. Each signal face shall consist of one or more signal sections of a standard traffic signal face, with flashing CIRCULAR YELLOW or CIRCULAR RED signal indications in each signal face. They shall be installed and used only at an intersection to control two or more directions of travel.

Application of Intersection Control Beacon signal indications shall be limited to the following:

A. Yellow on one route (normally the major street) and red for the remaining approaches; and

B. Red for all approaches (if the warrant for a multiway stop is satisfied).

Flashing yellow signal indications shall not face conflicting vehicular approaches.

A STOP sign shall be used on approaches to which a flashing red signal indication is shown on an Intersection Control Beacon (see Section 2B.04).

Guidance:

An Intersection Control Beacon should not be mounted on a pedestal in the roadway unless the pedestal is within the confines of a traffic or pedestrian island.

Option:

Supplemental signal indications may be used on one or more approaches in order to provide adequate visibility to approaching road users.

Intersection Control Beacons may be used at intersections where traffic or physical conditions do not justify conventional traffic control signals but crash rates indicate the possibility of a special need.

An Intersection Control Beacon is generally located over the center of an intersection; however, it may be used at other suitable locations.

Standard:

New installations of overhead intersection control flashing beacon shall consist of red indications for each approach.

The cost of installing an Intersection Control Beacon and intersection lighting shall be shared with the local agency in the same manner as a traffic signal.

Section 4K.03 <u>Warning Beacon</u>

Support:

Typical applications of Warning Beacons include the following:

A. At obstructions in or immediately adjacent to the roadway;
B. As supplemental emphasis to warning signs;
C. As emphasis for midblock crosswalks;
D. On approaches to intersections where additional warning is required, or where special conditions exist; and
E. As supplemental emphasis to regulatory signs, except STOP, YIELD, DO NOT ENTER, and SPEED LIMIT signs.

Standard:

A Warning Beacon shall consist of one or more signal sections of a standard traffic signal face with a flashing CIRCULAR YELLOW signal indication in each signal section.

A Warning Beacon shall be used only to supplement an appropriate warning or regulatory sign or marker. The beacon shall not be included within the border of the sign except for SCHOOL SPEED LIMIT sign beacons.

Warning Beacons, if used at intersections, shall not face conflicting vehicular approaches.

If a Warning Beacon is suspended over the roadway, the clearance above the pavement shall be at least 4.6 m (15 ft) but not more than 5.8 m (19 ft).

Guidance:

The condition or regulation justifying Warning Beacons should largely govern their location with respect to the roadway.

If an obstruction is in or adjacent to the roadway, illumination of the lower portion or the beginning of the obstruction or a sign on or in front of the obstruction, in addition to the beacon, should be considered.

Warning Beacons should be operated only during those hours when the condition or regulation exists.

Option:

If Warning Beacons have more than one signal section, they may be flashed either alternately or simultaneously.

A flashing yellow beacon interconnected with a traffic signal controller assembly may be used with a traffic signal warning sign (see Section 2C.29).

Section 4K.04 <u>Speed Limit Sign Beacon</u>

Standard:

A Speed Limit Sign Beacon shall be used only to supplement a Speed Limit sign.

A Speed Limit Sign Beacon shall consist of one or more signal sections of a standard traffic control signal face, with a flashing CIRCULAR YELLOW signal indication in each signal section. The signal

lenses shall have a nominal diameter of not less than 200 mm (8 in). If two lenses are used, they shall be vertically aligned, except that they may be horizontally aligned if the Speed Limit (R2-1) sign is longer horizontally than vertically. If two lenses are used, they shall be alternately flashed.

Option:

A Speed Limit Sign Beacon may be used with a fixed or variable Speed Limit sign. If applicable, a flashing Speed Limit Sign Beacon (with an appropriate accompanying sign) may be used to indicate that the speed limit shown is in effect.

Support:

Section 7B.11 contains additional Options for the use of Speed Limit Sign Beacons with SCHOOL SPEED LIMIT signs.

Section 4K.05 Stop Beacon

Standard:

A Stop Beacon shall consist of one or more signal sections of a standard traffic signal face with a flashing CIRCULAR RED signal indication in each signal section. If two horizontally aligned signal lenses are used, they shall be flashed simultaneously to avoid being confused with a highway-rail grade crossing flashing- light signals. If two vertically aligned signal lenses are used, they shall be flashed alternately.

The bottom of the signal housing of a Stop Beacon shall be not less than 300 mm (12 in) nor more than 600 mm (24 in) above the top of a STOP sign (see Section 2B.04).

Section 4K.101(CA) Warning Beacon Financing

Standard:

The cost of installing a Warning or Regulatory Sign Flashing Beacon on a State highway shall be at 100% State expense.

Section 4K.102(CA) Signal Ahead Flashing Beacons

Option:

Yellow flashing beacons may be used with Signal Ahead (W3-3) signs in advance of:

1. An isolated traffic signal on either a conventional highway or on an expressway in a rural area.
2. The first traffic signal approaching an urban area.
3. Any traffic signal with limited approach visibility, or where approach speeds exceed 80 km/h (50 mph).

On divided highways where the median is 2.5 m (8 ft) wide, or greater, the installation may consist of:

1. Two Type 1 standards, each with a Signal Ahead (W3-3) sign and a 300 mm (12 in) signal face, with one standard located in the median and the other off of the right shoulder; or
2. A Type 9 cantilever flashing beacon installation with a Signal Ahead (W3-3) or SIGNAL AHEAD (W3-3a) sign and two 300 mm (12 in) signal faces as shown in the Department of Transportation's Standard Plans. See Section 1A.11 for information regarding this publication.

The above installation designs may result in noncompliance with the Department of Transportation's Highway Design Manual mandatory standards for horizontal clearance and shoulder width, and the advisory design standard for clear recovery zones. If such nonstandard features cannot be avoided, the designer must obtain approval in accordance with Topic 82 of the Department of Transportation's Highway Design Manual and the current instructions pertaining to exceptions from mandatory and advisory design standards. See Section 1A.11 for information regarding this publication.

On undivided highways or on highways where the median is less than 2.5 m (8 ft) wide, the installation may consist of a single standard located off of the right shoulder as described for use on divided highways, or it may be a Type 9 cantilever flashing beacon installation.

Support:

The cost of installing a Signal Ahead Flashing Beacon is normally included in the traffic signal project and the cost shared with the local agency.

Section 4K.103(CA) Flashing Beacons at School Crosswalks

Option:

Flashing beacons at school crosswalks may be installed on State highways in accordance with CVC Sections 21372 and 21373.

Flashing yellow beacons may be installed to supplement standard school signing and markings for the purpose of providing advanced warning during specified times of operation when justified.

A flashing yellow beacon may be justified when ALL of the following conditions are fulfilled:

1. The uncontrolled school crossing is on the "Suggested Route to School"; and
2. At least 40 school pedestrians use the crossing during each of any two hours (not necessarily consecutive) of a normal school day; and
3. The crossing is at least 180 m (600 ft) from the nearest alternate crossing controlled by traffic signals, stop signs or crossing guards; and
4. The vehicular volume through the crossing exceeds 200 vehicles per hour in urban areas or 140 vehicles per hour in rural areas during the same hour the students are going to and from school during normal school hours; and
5. The critical approach speeds exceeds 55 km/h (35 mph) or the approach visibility is less than the stopping sight distance.

Standard:

If school authorities are to operate flashing yellow beacon, an inter-agency agreement shall be executed to assure designations of a responsible adult to operate the beacon controls and to provide accessibility for necessary equipment maintenance.

Where traffic signals and/or flashing beacons are justified only by the School Area Traffic Signal Warrant on a State highway, the installation shall be at 100% State expense. When any other warrant is met also, the cost is shared in the usual manner.

Support:

Figure 4K-101(CA) shows the worksheet for flashing beacon at school crossings.

Section 4K.104(CA) Speed Limit Sign Beacon

Guidance:

When a Speed Limit Sign Flashing Beacon is installed at the request of a local agency, or installed by the local agency under an encroachment permit the costs of installing and maintaining the beacon should be at 100% local agency expense.

Section 4K.105(CA) Flashing Beacons for Fire Stations

Option:

Flashing beacons at fire station driveways or at intersections immediately adjacent to a fire station may be installed on State highways.

Standard:

The flashing beacon shall be used only to supplement an appropriate warning or regulatory sign. The flashing beacon shall be actuated from an non-illuminated condition by a switch at the fire station.

The costs of installing and maintaining the flashing beacon for the fire station shall be at 100% local agency or fire department expense.

Section 4K.106(CA) Stop Sign Flashing Beacons

Support:

A Stop Sign Flashing Beacon consists of one or two signal sections with a flashing circular red indication in each section.

Standard:

The bottom of the housing of a Stop Sign Flashing Beacon shall not be less than 305 mm (12 in) nor more than 610 mm (24 in) above the top of the stop sign.

The cost of installing a Stop Sign Beacon shall be shared with the local agency in the same manner as a traffic signal.

Section 4K.107(CA) Flashing Beacons at Bus Stops on Freeway Interchanges

Option:

At locations of approved bus stops within interchange areas, a flashing beacon may be provided near the top of a lighting standard to provide a flag stop.

Standard:

The following design and operational requirements shall be met:

1. A push button shall be provided on the lighting standard with a sign explaining the purpose and operation. The sign shall state that if no bus has arrived within 15 minutes (or other time) after the button has been actuated it will be necessary to actuate it again.
2. The flashing beacon shall consist of a 200 mm (8 in), signal section with an uncolored or white lens mounted on the lighting standard in such a position that an approaching bus driver can see it on the freeway.
3. The operation of the control shall be such that the flashing beacon will operate for 15 minutes after the button has been actuated and then go out.

The cost of installing and maintaining Flashing Beacons at Bus Stops on Freeway Interchanges shall be 100% State expense.

(This space left intentionally blank)

Figure 4K-101 (CA). Flashing Beacon at School Crossings Worksheet

COUNT DATE _____

_____ DIST _____ CO _____ RTE _____ PM

CALC _____ DATE _____

CHK _____ DATE _____

Major St: _____ Critical Approach Speed _____ mph

Minor St: _____ Critical Approach Speed _____ mph

Speed limit or critical speed on major street traffic > 64 km/h (40 mph)..... ☐ or
In built up area of isolated community of < 10,000 population..... ☐
} **RURAL (R)**

☐ **URBAN (U)**

Flashing Yellow Beacon at School Crossings (All Parts Must Be Satisfied) **SATISFIED YES ☐ NO ☐**

Part A

	MINIMUM REQUIREMENTS				
		U	R		
Vehicle Volume	Each of 2 Hours	200	140		
School Age Pedestrians Crossing Street	Each of 2 Hours	40	40		

SATISFIED YES ☐ NO ☐

AND

Part B

Critical Approach Speed Exceeds 55 km/h (35 mph) SATISFIED YES ☐ NO ☐

AND

Part C

Is Nearest Controlled Crossing More Than 180 m (600 ft) away? SATISFIED YES ☐ NO ☐

(This space left intentionally blank)

CHAPTER 4L. IN-ROADWAY LIGHTS

Section 4L.01 Application of In-Roadway Lights

Support:

In-Roadway Lights are special types of highway traffic signals installed in the roadway surface to warn road users that they are approaching a condition on or adjacent to the roadway that might not be readily apparent and might require the road users to slow down and/or come to a stop. This includes, but is not necessarily limited to, situations warning of marked school crosswalks, marked midblock crosswalks, marked crosswalks on uncontrolled approaches, marked crosswalks in advance of roundabout intersections as described in Sections 3B.24 and 3B.25, and other roadway situations involving pedestrian crossings.

Standard:

If used, In-Roadway Lights shall not exceed a height of 19 mm (0.75 in) above the roadway surface.

Option:

The flash rate for In-Roadway Lights may be different from the flash rate of standard beacons.

Section 4L.02 In-Roadway Warning Lights at Crosswalks

Standard:

If used, In-Roadway Warning Lights at crosswalks shall be installed only at marked crosswalks with applicable warning signs. They shall not be used at crosswalks controlled by YIELD signs, STOP signs, or traffic control signals.

If used, In-Roadway Warning Lights at crosswalks shall be installed along both sides of the crosswalk and shall span its entire length.

If used, In-Roadway Warning Lights at crosswalks shall initiate operation based on pedestrian actuation and shall cease operation at a predetermined time after the pedestrian actuation or, with passive detection, after the pedestrian clears the crosswalk.

If used, In-Roadway Warning Lights at crosswalks shall display a flashing yellow signal indication when actuated. The flash rate for In-Roadway Warning Lights at crosswalks shall be at least 50, but not more than 60, flash periods per minute. The flash rate shall not be between 5 and 30 flashes per second to avoid frequencies that might cause seizures.

If used on one-lane, one-way roadways, a minimum of two In-Roadway Warning Lights shall be installed on the approach side of the crosswalk. If used on two-lane roadways, a minimum of three In-Roadway Warning Lights shall be installed along both sides of the crosswalk. If used on roadways with more than two lanes, a minimum of one In-Roadway Warning Light per lane shall be installed along both sides of the crosswalk.

If used, In-Roadway Warning Lights shall be installed in the area between the outside edge of the crosswalk line and 3 m (10 ft) from the outside edge of the crosswalk. In-Roadway Warning Lights shall face away from the crosswalk if unidirectional, or shall face away from and across the crosswalk if bidirectional.

Guidance:

If used, the period of operation of the In-Roadway Warning Lights following each actuation should be sufficient to allow a pedestrian crossing in the crosswalk to leave the curb or shoulder and travel at a normal walking speed of 1.2 m (4 ft) per second to at least the far side of the traveled way or to a median of sufficient width for pedestrians to wait. Where pedestrians who walk slower than normal, or pedestrians who use wheelchairs, routinely use the crosswalk, a walking speed of less than 1.2 m (4 ft) per second should be considered in determining the period of operation. Where the period of operation is sufficient only for crossing from a curb or shoulder to a median of sufficient width for pedestrians to wait, additional measures should be considered, such as median-mounted pedestrian actuators.

If used, In-Roadway Warning Lights should be installed in the center of each travel lane, at the centerline of the roadway, at each edge of the roadway or parking lanes, or at other suitable locations away from the normal tire track paths.

The location of the In-Roadway Warning Lights within the lanes should be based on engineering judgment.

Standard:

In-Roadway Warning Lights (IRWLs) shall not be placed on or within the crosswalk markings. If the In-Roadway Warning Lights are activated by a push button, the PUSH BUTTON FOR PEDESTRIAN WARNING LIGHTS, CROSS WITH CAUTION (R62E(CA)) sign shall be used.

The following shall be considered when evaluating the need for In-Roadway Warning Lights:

a. Whether the crossing is controlled or uncontrolled.
b. An engineering traffic study to determine if In-Roadway Warning Lights are compatible with the safety and operation of nearby intersections, which may or may not be, controlled by traffic signals or STOP/YIELD signs.
c. Standard traffic signs for crossings and crosswalk pavement markings are provided.
d. At least 40 pedestrians regularly use the crossing during each of any two hours (not necessarily consecutive) during a 24-hour period.
e. The vehicular volume through the crossing exceeds 200 vehicles per hour in urban areas or 140 vehicles per hour in rural areas during peak-hour pedestrian usage.
f. The critical approach speed (85th percentile) is 70 km/h (45 mph) or less.
g. In-Roadway Warning Lights are visible to drivers at the minimum stopping sight distance for the posted speed limit.
h. Public education on In-Roadway Warning Lights is conducted for new installations.

Option:

Overhead or roadside Flashing Yellow Beacons may be installed in conjunction with In-Roadway Warning Lights. In-Roadway Warning Lights may be installed independently, but are not necessarily intended to be a substitute for standard flashing beacons. Engineering judgment should be exercised.

Guidance:

Typical applications of In-Roadway Warning Lights are shown in Figure 4L-101(CA).

Section 4L.101(CA) <u>In-Roadway Warning Lights at Crosswalks Financing and Maintenance-State Highways</u>

Standard:

When In-Roadway Warning Lights are proposed by Department of Transportation on State highways, the Department of Transportation shall pay the costs of installation and maintenance. When In-Roadway Warning Lights are proposed and installed by a local agency on State highways, the installation of In-Roadway Warning Lights shall be covered by an Encroachment Permit issued by the local District Director of Department of Transportation. The local agency shall be responsible for installation and maintenance of the In-Roadway Warning Lights.

(This space left intentionally blank)

Figure 4L-101 (CA). Typical Layout for In-Roadway Warning Lights (IRWLs)

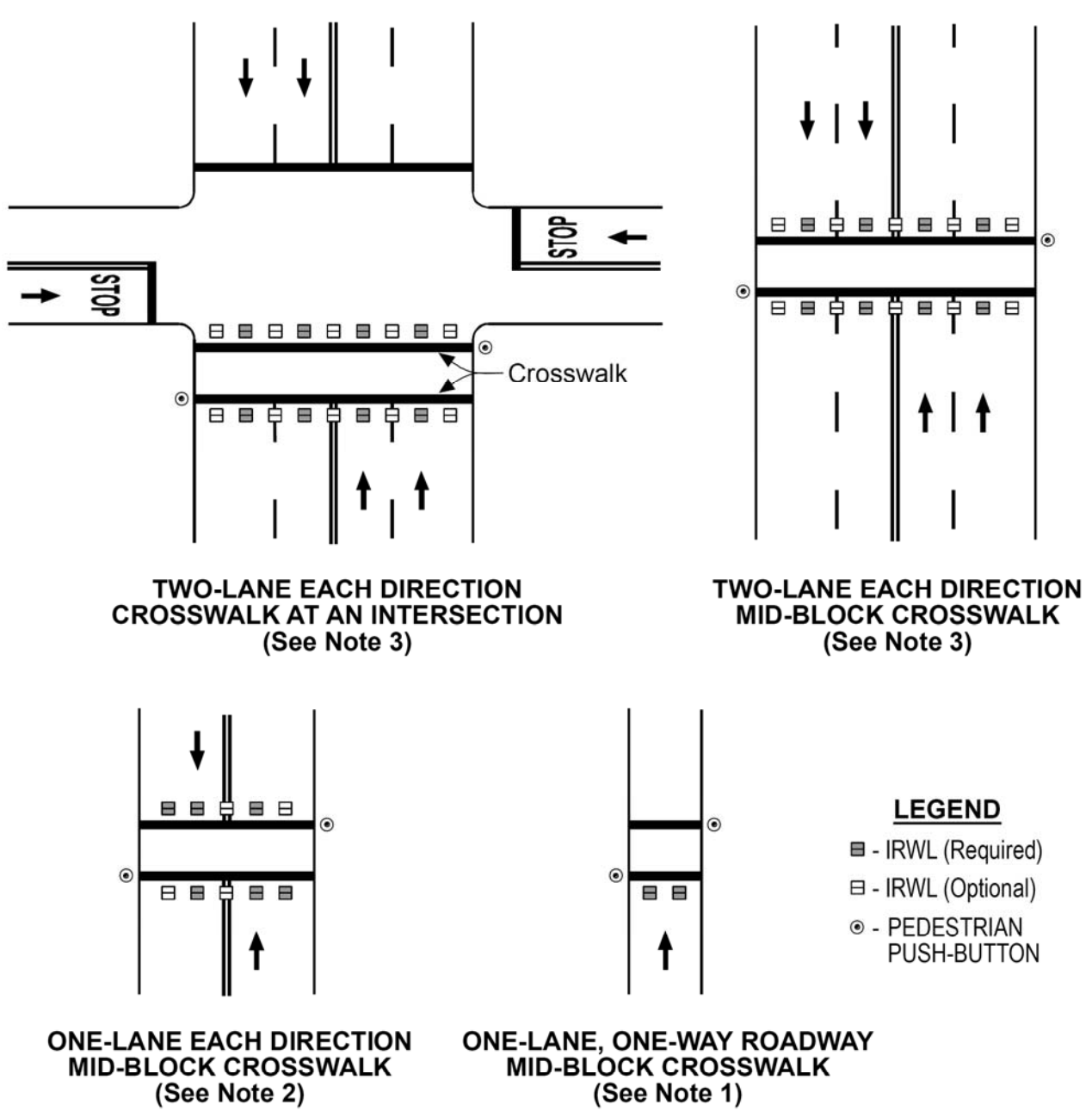

NOTES:

1. One-Lane, One-Way Roadways, a minimum of two IRWLs shall be installed on the approach side ot the crosswalk.
2. One-Lane each direction, a minimum of three IRWLs shall be installed along both sides of the crosswalk.
3. Two-Lanes each direction, a minimum of one IRWLs per lane, shall be installed along both sides of the crosswalk.
4. IRWLs should be located off the tire tracks.

(This page left intentionally blank)