Figure 7-14: Washington State Cable Median Barrier Terminal

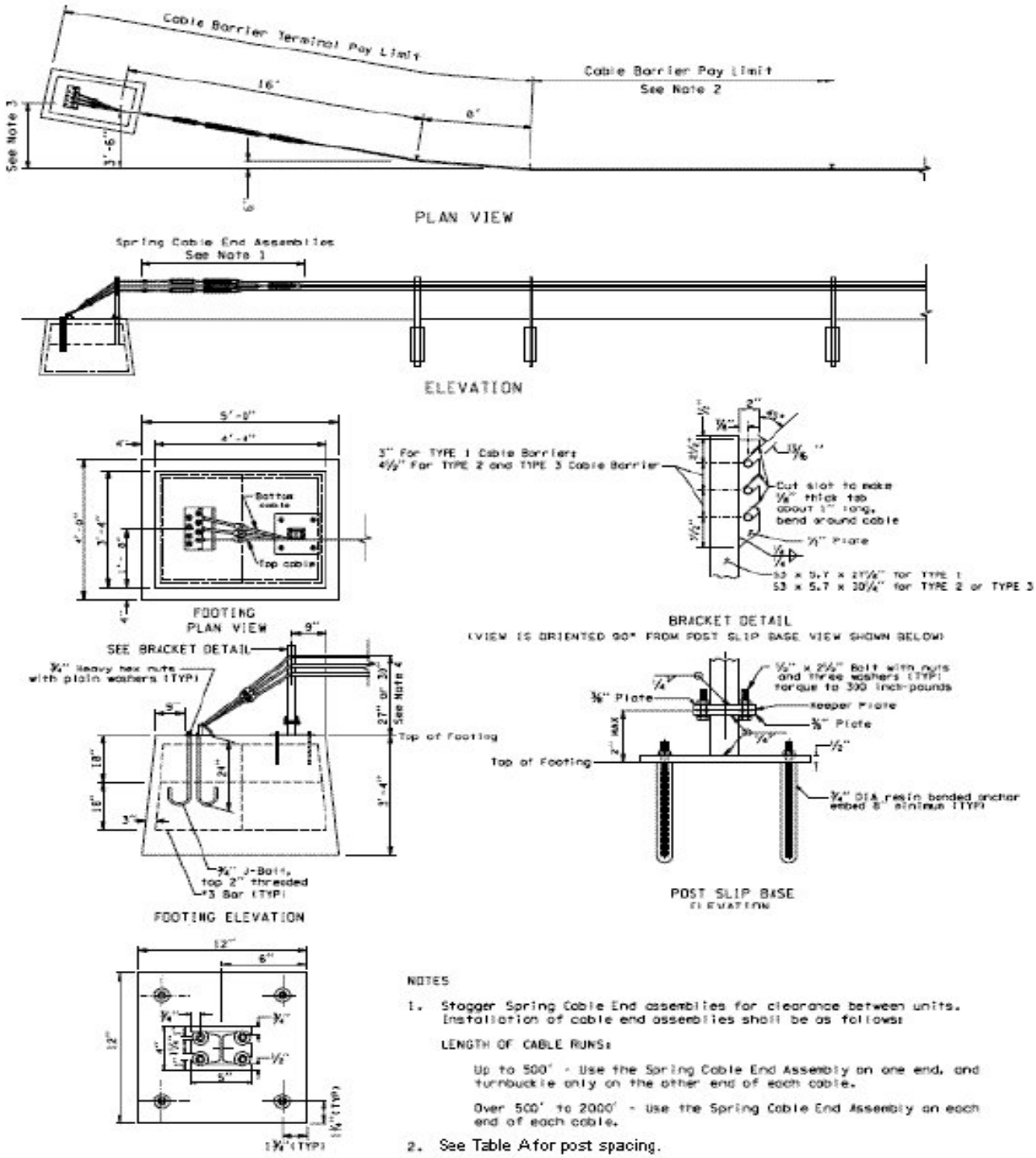

NOTES

1. Stagger Spring Cable End assemblies for clearance between units. Installation of cable end assemblies shall be as follows:

   LENGTH OF CABLE RUNS:

   Up to 500' - Use the Spring Cable End Assembly on one end, and turnbuckle only on the other end of each cable.

   Over 500' to 2000' - Use the Spring Cable End Assembly on each end of each cable.

2. See Table A for post spacing.

3. Distance from tangent of barrier run to notch for top cable on breakaway anchor angle shall be 4'.

4. The distance from the top of the footing to top of the highest cable is:

   27" for TYPE 1 Cable Barrier,
   30" for TYPE 2 and TYPE 3 Cable Barrier.

5. Where the cable is connected to a cable socket with a wedge type connector, one wire of the wire rope shall be crimped over the base of the wedge to hold it firmly in place.

TABLE A	
Curve Radius	Post Spacing
700' or more	16'
699' to 220'	12'
219' to 110'	8'
Less Than 110'	Use Not Recommended

CABLE BARRIER TERMINAL