STATE SHIELDS ON GUIDE SIGNS

CODE **G28-1**

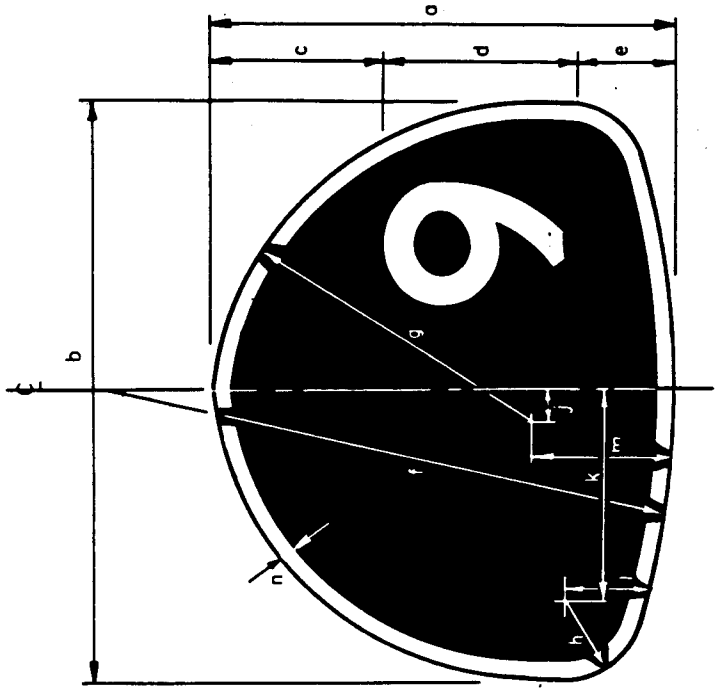

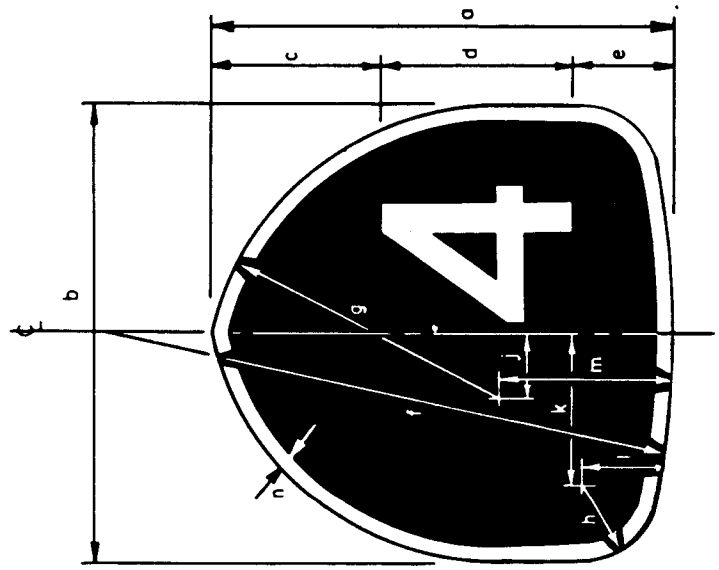

Green background with white border and numerals.

* 1" for cut-out borders.

** 1-5/16" for cut-out borders.

	4" Numerals		8" Numerals		10" Numerals		12" Numerals		15" Numerals		18" Numerals	
	2 Digits	3 Digits	2 Digits	3 Digits	2 Digits	3 Digits	2 Digits	3 Digits	2 Digits	3 Digits	2 Digits	3 Digits
a	9	11	18	18	25	25	32	32	36	36	42	42
b	10-1/2	15	21	24	28	32	35	40	36	45	42	54
c	3-1/4	4-3/4	6-1/2	6-1/2	10	10	13	13	13-1/2	13-1/2	15-1/2	15-1/2
d	4D	4D	8D	8D	10D	10D	12D	12D	15D	15D	18D	18D
e	1-3/4	2-1/4	3-1/2	3-1/2	5	5	7	7	7-1/2	7-1/2	8-1/2	8-1/2
f	14-3/4	18	29-1/2	32-7/16	41	41	53-7/16	53-7/16	65	65	75-7/16	75-7/16
g	6-7/16	8-1/2	13-1/16	13-1/16	17-7/16	17-7/16	21-1/16	21-1/16	23	25	26-13/16	30
h	2-3/16	2-1/4	4-3/8	4-3/8	5-13/16	5-13/16	5-11/16	5-11/16	6	6	6-15/16	7-1/8
j	1-3/16	1	2-9/16	1-1/16	3-7/16	1-7/16	3-9/16	1-1/16	5	2-1/2	5-13/16	3
k	3-1/16	5-1/4	6-1/8	7-5/8	8-3/16	10-3/8	11-13/16	14-5/16	12	16-1/2	14-1/16	19-7/8
l	2-9/16	3-1/8	5-1/8	5-7/16	6-13/16	7-3/8	7-1/8	7-7/8	7-1/4	8-3/8	8-3/8	10
m	2-11/16	2-1/2	5-3/16	5	7-7/8	7-5/8	11-1/4	10-15/16	13-9/16	11-1/8	15-7/8	12-1/8
n	1/2*	1/2*	3/4**	3/4**	1**	1**	1-1/2**	1-1/2**	1-3/4**	1-3/4**	2**	2**

APPROVED

TRAFFIC ENGINEER

11/15/71

DATE

REVISION

HT-69 REV. 12/30 69