CODE **R61**

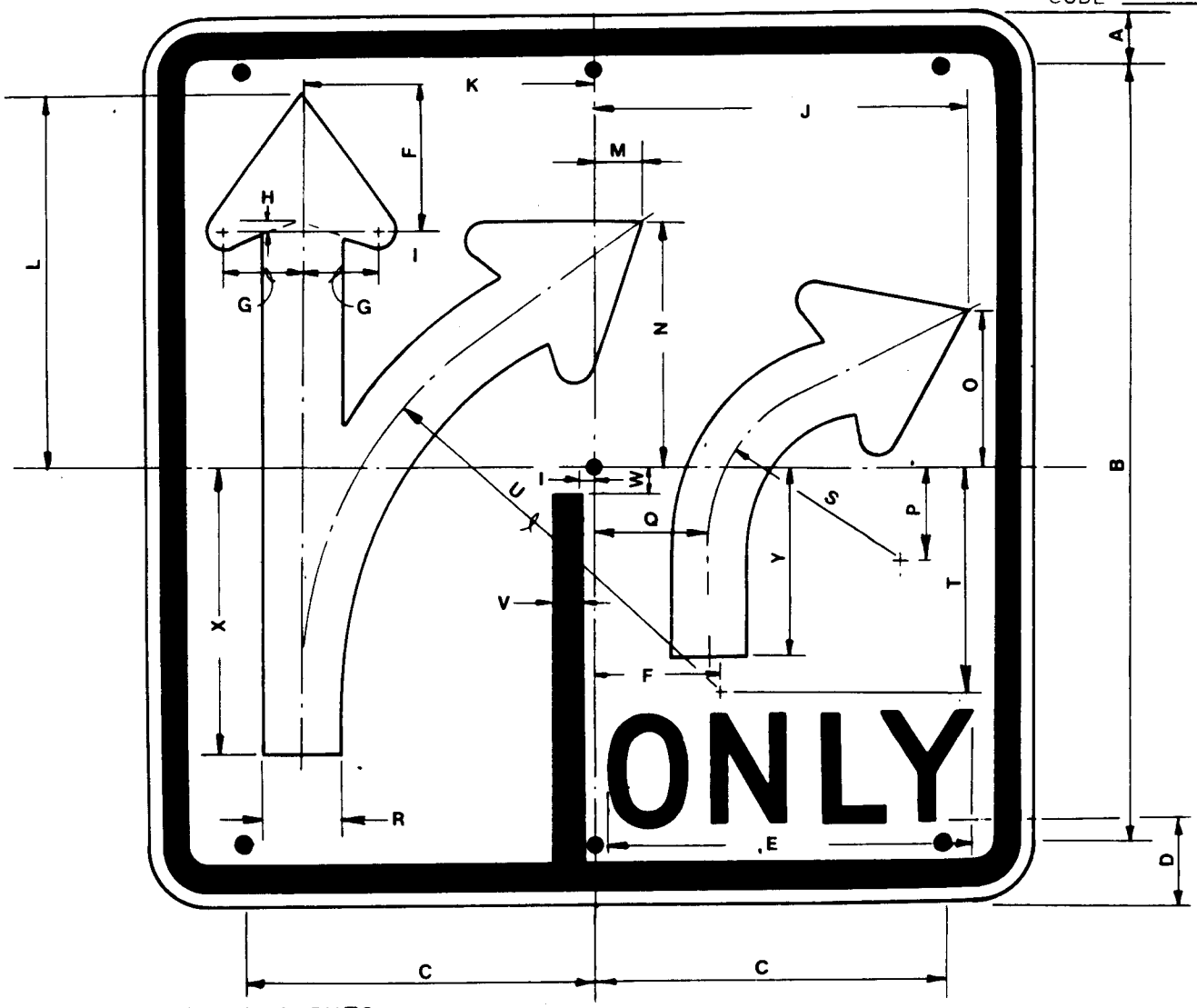

ALL DIMENSIONS ARE IN INCHES

R61 SUFFIX	SIZE	BORDER WIDTH	MARGIN WIDTH	CORNER RADIUS	LETTER SIZE SERIES & STROKE	DIMENSIONS A	B	C	D	E	F	G
-3.1	30 X 30	3/4	1/2	1-1/2	4D - .72	3	24	–	3	12-7/8	4-3/4	2-5/8
-4.1	45 X 45	1-1/4	3/4	3	6D - 1.08	3	19-1/2	16	5	18-3/4	7	3-3/4

R61 SUFFIX	DIMENSIONS H	I	J	K	L	M	N	O	P	Q	R	S	T	U
-3.1	3/8	1/2	12-7/8	9-3/4	12-5/8	1-3/4	8	5	4-1/8	2-3/4	2-1/2	5-3/4	7-1/2	14-1/2
-4.1	1/2	3/4	19-1/4	14-5/8	18-3/4	2-3/4	12	7-1/2	6-1/8	4	3-3/4	8-5/8	11-1/4	21-5/8

WHITE REFLECTIVE BACKGROUND WITH **BLACK** BORDER LEGEND & SYMBOL

3 8 DIA HOLES ●

DIMENSIONS V	W	X	Y	Z
3/4	1	10-1/4	6-1/2	
1-1/4	1	15-1/2	9-3/4	

APPROVED

CHIEF OFFICE OF TRAFFIC

10/23/75
DATE

REVISION

STATE OF CALIFORNIA
DEPARTMENT OF TRANSPORTATION

CMO-T-69 (REV 6/75)