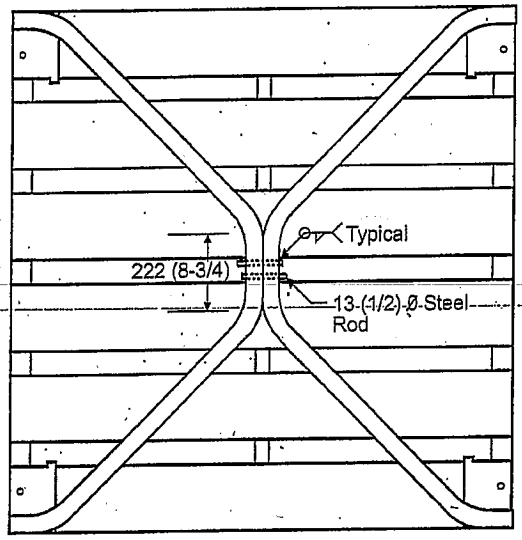

TOP VIEW

133 (5-1/4)

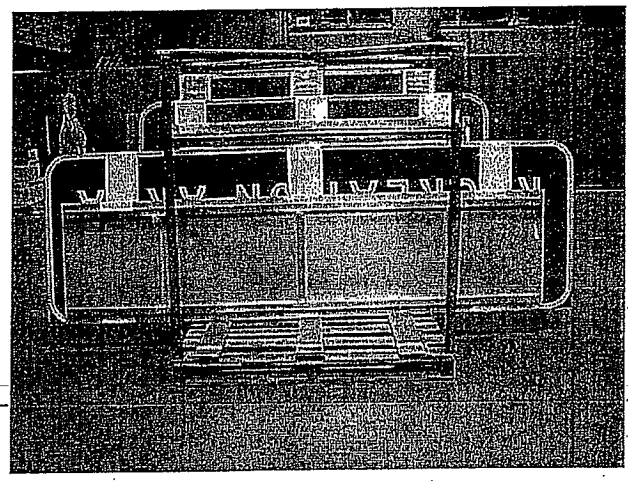

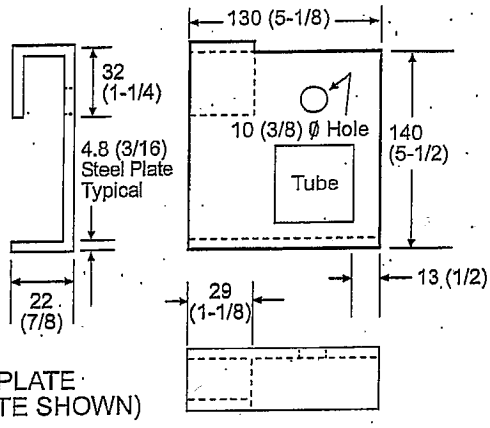

BASE PLATE
(RIGHT PLATE SHOWN)

Notes:
1. Metric equivalents calculated using a factor of 25.4 millimeters per inch.
2. All dimensions are in millimeters (inches).
3. Maximum 4 loads high.
4. Color is blue.
5. 2,000 pounds capacity.
6. Each base plate screwed to wood pallet.

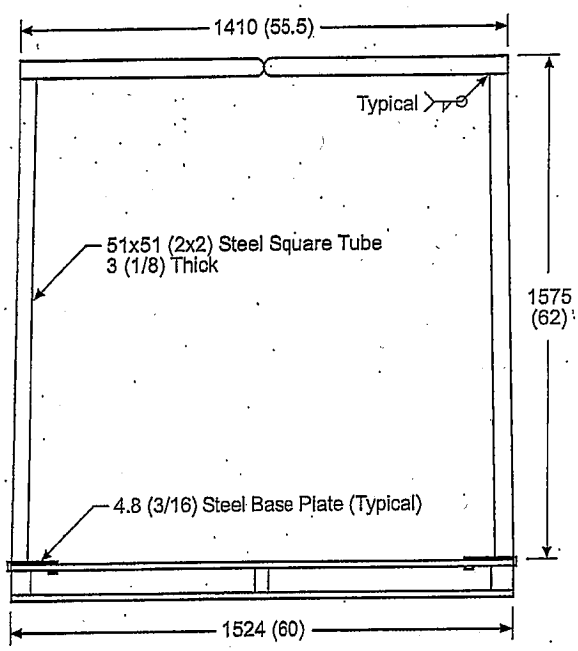

FRONT VIEW

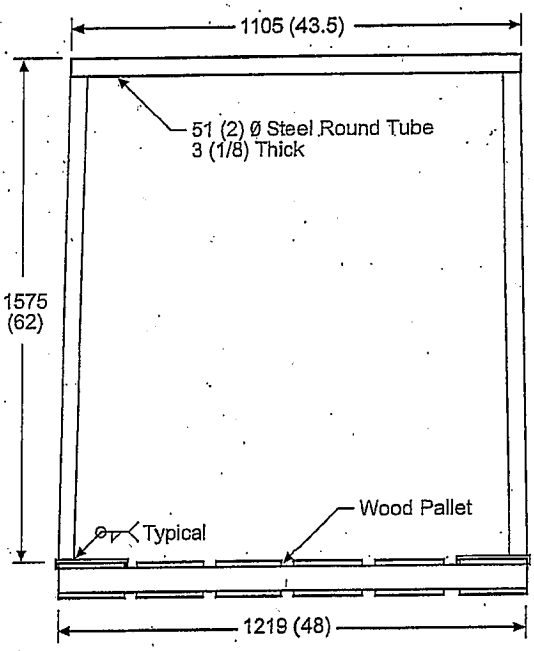

SIDE VIEW

TIER RACK STACKING PALLET FRAME	June 2004