CODE **Type N**

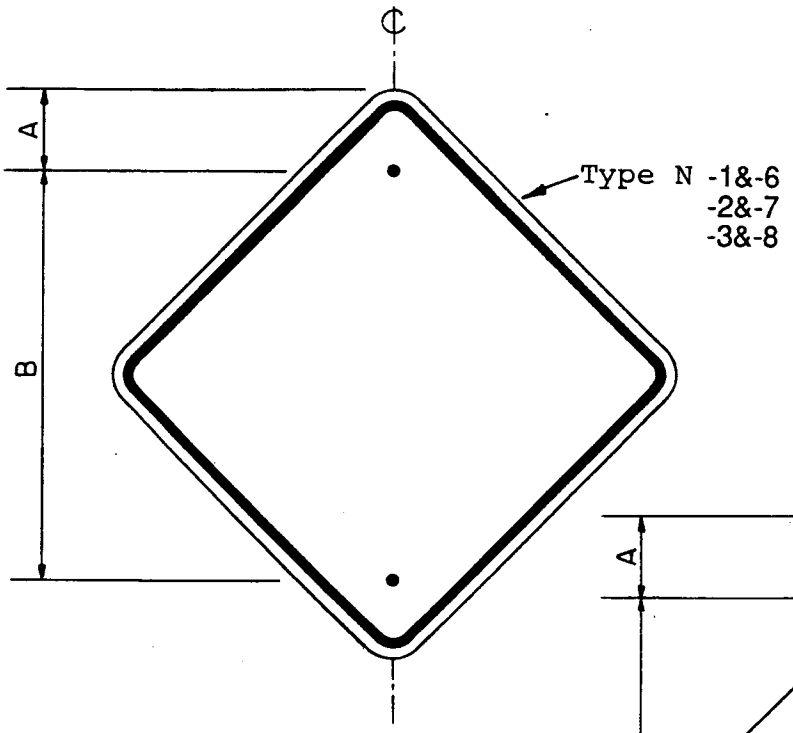

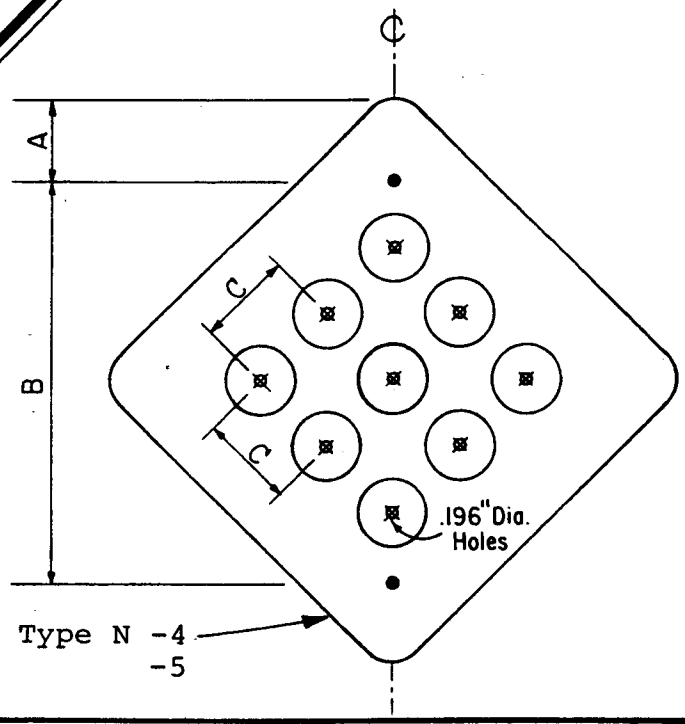

3/8" DIA. HOLES ●

ALL DIMENSIONS ARE IN INCHES

Type N SUFFIX	SIZE	BORDER WIDTH	MARGIN WIDTH	LETTER SIZE SERIES & STROKE WIDTH					COR. RAD.
				LINE 1	LINE 2	LINE 3	LINE 4	LINE 5	
-1,-2,-3	18x18	3/8	3/8						1½
-4,-5	18x18	--	--						1½
-6,-7,-8	24x24	5/8	3/8						1-1/2

Type N SUFFIX	SIZE	DIMENSIONS											
		A	B	C	D	E	F	G	H	I	J	K	L
-1,-2,-3	18x18	3	18	--									
-4,-5	18x18	3	18	4									
-6,-7,-8	24x24	--	24	--									

-1&-6. Yellow REFLECTIVE BACKGROUND WITH Black BORDER.
-2&-7. Red REFLECTIVE BACKGROUND WITH Black BORDER.
-3&-8. Orange REFLECTIVE BACKGROUND WITH Black BORDER.
-4. Yellow BACKGROUND WITH 9-3¼ Yellow REFLECTORS.
-5. Red BACKGROUND WITH 9-3¼ Red REFLECTORS.

APPROVED: [signature] TRAFFIC ENGINEER — 11/13/74 DATE — 10/4/96 REVISION — 7/23/98

HT-69 REV 4/74