Deck Drainage Design

1. Run-Off Analysis

When disposal of storm water from a major structure is to be made into facilities belonging to or under the control of a local agency, it may be necessary to furnish anticipated maximum run-offs to the agency concerned.

Any recognized method of computing the quantity of run-off may be employed. A simple and easy analysis is obtained by the Rational Method, which converts rainfall intensity for the design frequency storm to run-off by the formula:

$$Q = 0.28\ CiA \tag{1}$$

where Q = Design Discharge, in cubic meters per second;
C = Coefficient of Runoff = 1.0 for bridge decks;
i = Average rainfall intensity, in millimeters per hour, for a given frequency and for the duration equal to the time of concentration. (Districts may or may not indicate the intensity for a given area);
A = Drainage area, in square kilometers, tributary to the point under design.

Barring information to the contrary from the District, reasonable criteria for this computation is a five-minute concentration time and a precipitation rate of 127 mm per hour. This results in a total gutter flow:

$$Q = 0.0000356\ A \tag{1a}$$

where A = Tributary Area in square meters.

2. Capacity of Grate Inlets in a Sag

A grate inlet in a sag operates first as a weir having a crest length roughly equal to the outside perimeter (P) along which the flow enters. Bars are disregarded and the side against the curb is not included in computing P. Weir operation continues to a depth (d) of about 0.1 meters above the top of grate and the discharge intercepted by the grate is :

$$Q_i = 1.66Pd^{1.5} \tag{2}$$

where Q_i = rate of discharge into the grate opening in cubic meters per second;
P = perimeter of grate opening, in meters, disregarding bars and neglecting the side against the curb;
d = depth of water at grate, in meters. Use average d.

When the depth at the grate exceeds about 0.4 meters, the grate begins to operate as an orifice and the discharge intercepted by the grate is :

$$Q_i = 0.67A\,(2gd)^{0.5} = 2.97Ad^{0.5} \tag{3}$$

where Q_i = rate of discharge into the grate opening, in cubic meters per second;
A = clear opening of the grate, in square meters;
g = acceleration of gravity, 9.80 meters per second^2;
d = depth of ponded water above top of grate, in meters. Use average d.

Between depths over the grate of about 0.1 and about 0.4 meters the operation of the grate inlet is indefinite due to vortices and other disturbances. The capacity of the grate lies between that given by equations (2) and (3).

Type of Drain	Clear Area	Clear Perimeter
A	0.0128 m^2	0.408 m
B	0.0186 m^2	0.242 m
C	0.3375 m^2	2.858 m
D	0.1125 m^2	1.231 m

Because of the vortices and the tendency of trash to collect on the grate, the clear opening or perimeter of a grate inlet should be at least twice that required by equations (2) and (3) in order to remain below the design depth over the grate. Where danger of clogging is slight, a factor of safety less than two may be used.

Capacity of the drain outlet pipe should be checked using equation (3) with d equal to the depth of water above the center of outlet pipe and A equal to the outlet pipe area.

3. Sheet Flow

Concentrations of sheet flow across bridge decks are to be avoided. As a general rule, no more than 0.003 m^3/sec should be allowed to concentrate and flow across a bridge deck. Refer to Section 831.4(1) Sheet Flow of the *Highway Design Manual.*

4. Flow in Gutters

A gutter is defined, for purposes of this discussion, as the section of bridge deck next to the barrier which conveys water during a storm runoff event. It may include a portion or all of the shoulder. Gutter cross sections usually have a triangular shape with the barrier forming the near-vertical leg of the triangle. The gutter may have a straight cross slope or a cross slope composed of two straight lines.

Modification of the Manning equation is necessary for use in computing flow in triangular channels because the hydraulic radius in the equation does not adequately describe the gutter cross section, particularly where the top width of the water surface may be more than 40 times the depth at the curb. To compute gutter flow, the Manning equation is integrated for an increment of width across the section. The resulting equation in terms of cross slope and spread on the pavement is:

$$Q = (K/n)\, S_x^{5/3}\, S^{1/2}\, T^{8/3}$$

where K = 0.375;
Q = flow rate, m^3/s;
T = width of flow (spread), m;
S_x = cross slope, m/m;
S = longitudinal slope, m/m.
n = Manning's coefficient

The equation neglects the resistance of the curb face because this resistance is negligible from a practical point of view if the cross slope is 10 percent or less.

Spread on the pavement and flow depth at the curb are often used as criteria for spacing drainage inlets. Generally, design water spread should not exceed the shoulder width. Refer to Section 831.3 of the *Highway Design Manual.* Figure 1 is a nomograph for solving the equation. The nomograph can be used for either criterion with the relationship:

$$d = TS_X$$

The nomograph can be used for direct solution of gutter flow where the Manning n value is 0.016. For other values of n, divide the value of Qn by n. Instructions for use and an example problem solution are provided on the nomograph. A metric version of this nomograph is not available, therefore units for T and Q must be converted.

5. Capacity of Grate Inlets on Grade

The inlet grate must be of adequate length in the longitudinal direction to intercept the flow approaching it without excessive splash over. An estimate of the required drain length is given by the following equation.

$$L_b = V/2\,(d + d_b)^{1/2}\,(32.2/9.80)^{1/2} = 0.9\,V\,(d + d_b)^{1/2} \quad (4)$$

L_b = length of clear opening of grate in meters (0.42 m for grates in drain type C, D-1 and D-2)
V = flow velocity in meters per second
d = depth of flow at curb in meters
d_b = depth of the grate bar in meters (0.057 m for drain type C, D-1 and D-2)

Test on grates similar to those used on standard drains type C and D have shown that splash over will begin at a flow velocity of approximately 1.1 meters per second. At velocities above 1.1 m/s the grate will not intercept all of the flow within the grate width. The grate efficiency can be estimated for higher flow velocities using the following equation which approximates test results.

$$E = 100 - 30\,(V - 1.1) \leq 100\%$$

Flow not intercepted continues to the next inlet.

The capacity of inlets can also be controlled by the orifice capacity of the drain outlet pipe. Use equation (3) with d equal to the depth of water above the center of the outlet pipe and A equal to the area of the pipe opening.

$$Q = 0.67\,A\,(2gd)^{1/2} = 2.97\,A\,(d)^{1/2} \quad (3)$$

Drain Properties

D-2	d = 0.159 + y meters	A = 0.012 m²
D-2 Modified	d = 0.152 + y meters	A = 0.018 m²
D-1	d = 0.293 + y meters	A = 0.018 m²

where y = flow depth at curb

6. Scupper Design

Scupper in a Sag

The capacity of a barrier rail scupper in a sag is calculated as a weir or an orifice depending on the depth of water at the curb. The scupper operates as a weir up to a depth equal to the opening height and as an orifice at depths greater than 1.4 times the opening height . The flow is in a transition stage between 1.0 and 1.4 times the opening height. A factor of safety of 2 should be used when designing scuppers in a sag location. The following equations are used to estimate the scupper flow capacity.

Scupper operating as a weir, $d < h$

$$q = 1.25\, L\, d^{1.5}$$

Scupper operating as an orifice, $d > 1.4h$

$$q = 0.67\, A\, [\, 2g\, (\, d\text{-}h/2)\,]^{0.5} = 2.97\, A\, (\, d\text{-}h/2\,)^{0.5}$$

A = clear area of opening, m^2
L = length of scupper opening, m
g = acceleration of gravity, 9.80 meters per second^2
d = depth of water at curb, meters
h = height of scupper opening, meters

Scupper on Grade

Deck drainage scuppers in bridge barrier railings on grade are designed as curb-opening inlets. To determine the capacity of a scupper, the length of curb-opening inlet required for total interception of the gutter flow is first calculated. Then, the efficiency of the actual scupper opening is calculated to determine its capacity.

$$L_T = K\, Q^{0.42}\, S^{0.3}\, (1/nS_x)^{0.6}$$
$$E = 1 - (1 - L/L_T)^{1.8}$$
$$q = E\, Q$$

L_T = length of curb opening to intercept 100% of gutter flow, meters
E = efficiency of curb-opening inlet shorter than L_T
L = curb-opening length, meters
K = constant, 0.817 for metric units
n = friction coefficient
S = longitudinal slope of deck, meters per meter
S_x = cross slope of deck, meters per meter
Q = gutter flow rate, m^3/s
q = scupper capacity, m^3/s

If the depth of flow at the curb exceeds the height of the scupper opening then the above method of calculating flow capacity is not applicable. The capacity can be roughly estimated using the orifice equation for a scupper in a sag.

Capacity of a standard 300 mm x 75 mm scupper on grade with the shoulder flowing full and n = 0.016 are given in the following table. When the depth of flow at the curb exceeds the height of the scupper opening the orifice capacity is given and is underlined. When the depth of flow is greater than the scupper height but less than 1.4h, the flow is in the transition stage between operation as a weir and an orifice. When this is the case, the orifice equation gives a somewhat high estimate of capacity. These values are shown in **bold** and should be used with judgment.

300 mm x 75 mm Scupper Capacity On Grade (m^3/s)

Deck Cross Slope	Shoulder Width 0.6 m	1.2 m	1.5 m	2.4 m	3.0 m
1%	0.00011	0.00034	0.00048	0.0010	0.0015
2%	0.00032	0.0010	0.0014	0.0030	0.0043
3%	0.00061	0.0019	0.0027	0.0057	**0.015**
4%	0.00097	0.0030	0.0042	**0.016**	0.019
5%	0.0014	0.0042	0.0061	0.019	0.022
6%	0.0018	0.0056	**0.015**	0.022	0.025
7%	0.0023	**0.014**	**0.017**	0.024	0.028
8%	0.0029	**0.016**	0.019	0.026	0.030
9%	0.0035	0.018	0.021	0.028	0.032
10%	0.0041	0.019	0.022	0.030	0.034

7. Drain Pipe Capacity

Drain pipe capacity should be checked when more than one drain is connected to the drain pipe. Pipe flow capacity is the product of flow velocity and pipe area. Pipe flow velocity is calculated using the Manning's formula for open channel flow.

$$V = (K/n)\, R^{2/3}\, S_o^{1/2}$$
$$Q = V\,A$$

V = flow velocity in meters per second
K = constant of proportionality, 1.00 for metric units
n = friction coefficient. *Highway Design Manual* Table 851.2 recommends 0.015 for steel pipe.
R = hydraulic radius. For full circular pipe R = D/4
S_o = slope of pipe in meters per meter
Q = flow rate in m^3/s
A = area of pipe in m^2

Pipe flow velocity should be at least 0.9 meters per second when flowing 1/2 full in order to provide a self cleaning flow velocity. Generally, a minimum slope of 2% should be used. The following pipe flow velocities and capacities are calculated for pipe with n = 0.015.

Pipe Diameter NPS (mm)	Pipe Slope m/m	Velocity m/s	Pipe Flow m^3/s
6 (152)	0.01	0.75	0.014
6	0.02	1.07	0.019
6	0.03	1.31	0.024
6	0.04	1.51	0.028
6	0.05	1.69	0.030
8 (203)	0.01	0.91	0.030
8	0.02	1.29	0.042
8	0.03	1.58	0.051
8	0.04	1.83	0.059
8	0.05	2.04	0.066
10 (254)	0.01	1.06	0.054
10	0.02	1.50	0.076
10	0.03	1.84	0.093
10	0.04	2.12	0.108
10	0.05	2.37	0.120
12 (305)	0.01	1.20	0.087
12	0.02	1.69	0.124
12	0.03	2.07	0.151
12	0.04	2.40	0.175
12	0.05	2.68	0.195

8. Example Drainage Design

The example structure is as follows:

Deck width between rails = 19.8 m (Rt. shoulder @ 3 m, 4 lanes @ 3.6 m ea., Lt. shoulder @ 2.4 m).
Structure length = infinite. (Frame length = 200 m between expansion joints.)
Cross slope @ 2% = .02 m/m.
Profile gradient is constant @ 1% = 0.01 m/m.
Pavement = PCC with broom finish, Manning's n = .016 (roughness coefficient for smooth texture asphalt, rough textured asphalt and float finished PCC are .013, .016, and .014 respectively).

The width of flow can vary, but should not encroach upon the traveled way. Where total interception is a requirement, the drain width determines maximum width of flow. It is free to vary within that limit providing the drain is capable of handling the flow passing into it.

Flow bypassing a grate will be added to the runoff quantity for the following drain.

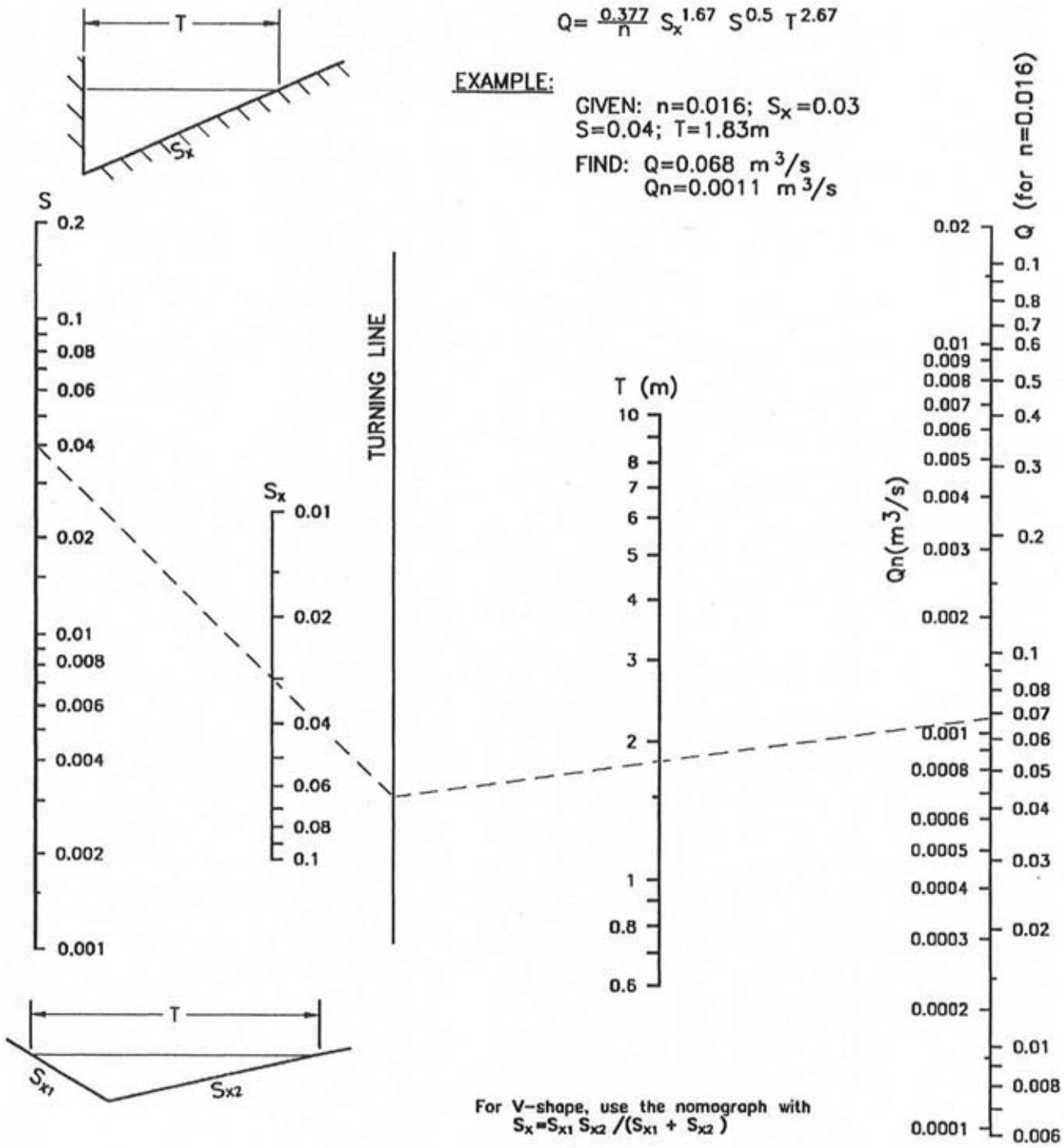

Figure 1. Nomograph for flow in triangular gutter sections

Example 1 – For illustrative purposes assume the use of a Type C drain and limit the width of flow to 1.22 m (the width of drain). This will provide complete flow interception at each drain.

Step 1

Find total flow quantity Q for a 1.22 m width.

For
$$n = 0.016$$
$$T = 1.22 \text{ m}$$
$$S_x = 0.02 \text{ m/m}$$
$$S = 0.01 \text{ m/m}$$
$$Q = (K/n)\, S_x^{5/3}\, S^{1/2}\, T^{8/3}$$
$$= (0.375/0.016)\,(0.02)^{5/3}\,(0.01)^{1/2}\,(1.22)^{8/3}$$
$$= 0.0059 \text{ m}^3/\text{s}$$

Step 2

Check L_b, length of clear opening. (Use equation 4.)

$$d = TS_x = 1.22\,(0.02) = 0.024 \text{ m}$$
$$V = \frac{Q}{A} = \frac{Q}{\frac{1}{2}T(d+d')} = \frac{0.0059}{\frac{1}{2}(1.22)(0.024)} = 0.40 \text{ m/s}$$

where d′ is the depth of flow bypassing the grate

$$L_b = 0.9V\,(d + d_b)^{1/2} = 0.9\,(0.40)\,(0.024 + 0.057)^{1/2}$$
$$L_b = 0.10 \text{ m} < 0.42 \text{ m OK}$$

Step 3

Check capacity of drain outlet using equation (3).

$$d = 0.23 + 0.024 = 0.254 \text{ m}$$
$$Q = 2.97\,(0.018)\,(0.254)^{0.5}$$
$$= 0.027 \text{ m}^3/\text{s} > 0.0059, \text{ therefore drain can handle flow}$$

Step 4

Determine spacing. (Use equation 1a.)

$$Q = 0.0000356A = 0.0000356\,(LW)$$

For
$$Q = 0.0059 \text{ m}^3/\text{s}$$
$$W = 19.8 \text{ m}$$
$$L = 0.0059/(0.0000356)(19.8) = 8.4 \text{ m}$$

Number of drains required = 200/8.4 = 23.8, use 24

Note: As demonstrated a very large drain is being used at a very close spacing to collect a limited quantity of flow. This is not a practical design.

Example 2 – Allow some of flow to pass the drains. Use a flow width equal to the shoulder width of 3 meters. Full interception of the flow at the hinge joint is not required.

Step 1

Find total flow quantity, Q, for a 3.0 m width.

For
$$n = 0.016$$
$$T = 3.0 \text{ m}$$
$$S_x = 0.02 \text{ m/m}$$
$$S = 0.01 \text{ m/m}$$
$$Q = (0.375/0.016)\,(0.02)^{1.67}\,(0.01)^{0.50}\,(3.0)^{2.67}$$
$$= 0.064 \text{ m}^3/\text{s}$$

Step 2

Calculate capacity of drain with shoulder flowing full.

Flow depth at edge of drain

$$d = (3.00 - 1.22)\,0.02 = 0.036 \text{ m}$$

Flow bypassing grate

$$Q_b = (0.375/0.016)\,(0.02)^{1.67}\,(0.01)^{0.50}\,(3.00 - 1.22)^{2.67} = 0.0159 \text{ m}^3/\text{s}$$

Flow within grate width

$$Q_w = 0.0641 - 0.0159 = 0.0482 \text{ m}^3/\text{s}$$

Check L_b, length of clear opening.

Depth at face of curb

$$d = TS_x = 3.00\,(0.02) = 0.06 \text{ m}$$
$$V = \frac{Q_w}{\frac{1}{2}b(d+d')} = \frac{0.0482}{\frac{1}{2}(1.22)(0.06+0.036)} = 0.823 \text{ m/s}$$
$$L_b = 0.9V\,(d + d_b)^{1/2}$$
$$= 0.9\,(0.823)\,(0.06 + 0.057)^{1/2}$$
$$= 0.253 \text{ m} < 0.42 \text{ m OK}$$

Check capacity of drain outlet using equation (3).

$$d = 0.23 + \frac{0.06 + 0.036}{2} = 0.278 \text{ m}$$

$$Q_o = 2.97\ (0.018)\ (0.278)^{0.5}$$
$$= 0.0282\ m^3/s < Qw = 0.0482$$

Therefore drain capacity is controlled by outlet.

Bypass flow $Q_b = 0.064 - 0.0282 = 0.036\ m^3/s$

Step 3

Determine maximum distance to first drain from begin bridge.

First drain must be located before the point at which the flow width equals the shoulder width.

$$Q = 0.0000356\ LW$$

for Q = shoulder flow capacity
W = bridge width

$$L = \frac{Q}{0.0000356\ W}$$

$$L = \frac{0.0641}{0.0000356\ (19.8)}$$

$$L = 91\ m$$

Step 4

Determine maximum spacing between intermediate drains.

$$Q = 0.0000356\ LW$$

for Q = drain capacity with shoulder flowing full
W = bridge width

$$L = \frac{Q}{0.0000356\ W}$$

$$L = \frac{0.0282}{0.0000356\ (19.8)}$$

$$L = 40\ m$$

Step 5

Determine drain layout.

First drain at 91 m from beginning of bridge

Intermediate drains at 40 m max.

Last drain in frame adjacent to hinge joint.

Number of drains in first frame = $\frac{200-91}{40}+1=3.7$ Use 4 drains

Number of drains in intermediate frames = $\frac{200}{40}=5.0$ Use 5 drains

Actual layout would be adjusted to best fit the available down drain locations and minimize the length of longitudinal drain pipes. In this example fewer drains are required because the drain capacity is much greater due to increasing the depth of flow at the drain and some flow is allowed to cross the hinge joint.

If full interception was required prior to the hinge joint or a superelevation reversal, additional drains would be required at a reduced spacing upstream of the joint. The required drain spacing would be determined by a trial and correction process to limit the width of flow at the last drain to less than the drain width.

9. Detailing Practice

In general, drain locations should be indicated on the General Plan and Girder Layout Sheets, and appropriate standard sheets should be inserted in the plans. Drain pipes and details should be shown on abutment, bent and column detail sheets. On viaducts or structures with extensive piping, a separate sheet showing the entire drainage layout will be necessary. The following are examples of details for special applications.

Expansion Coupling

When expansion couplings are located within a box girder cell, provide access for inspection and maintenance with deck manholes or soffit openings.

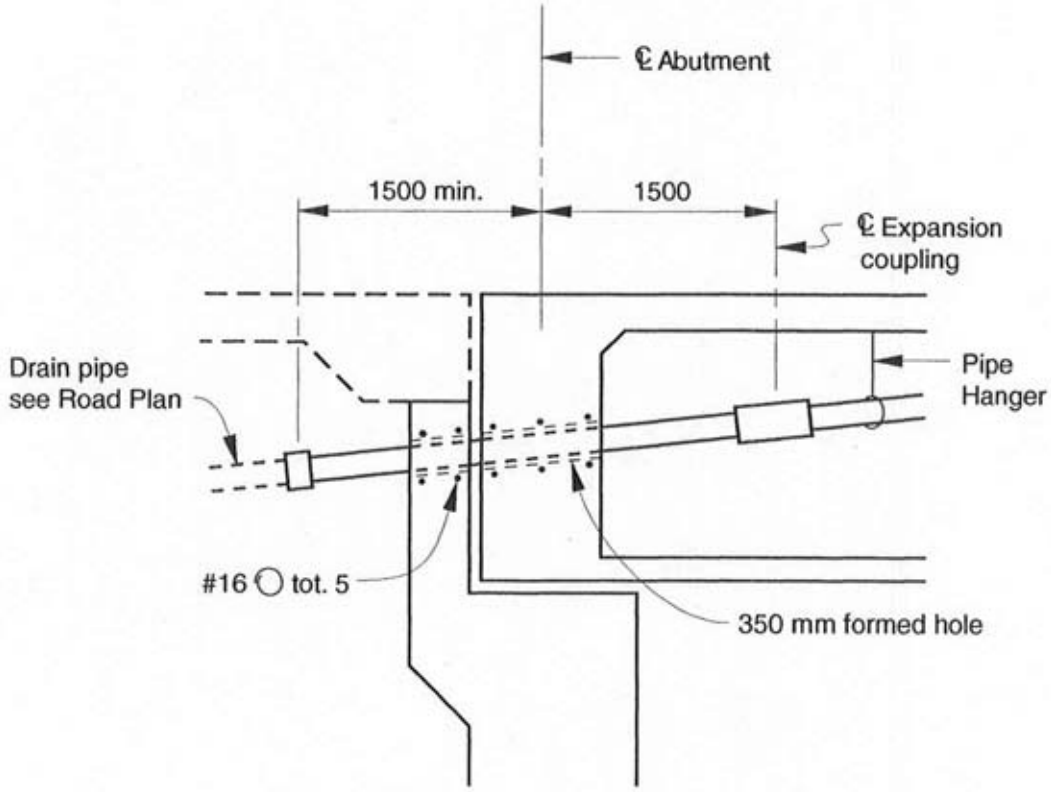

DECK DRAIN PIPE DETAIL AT ABUTMENT
No Scale

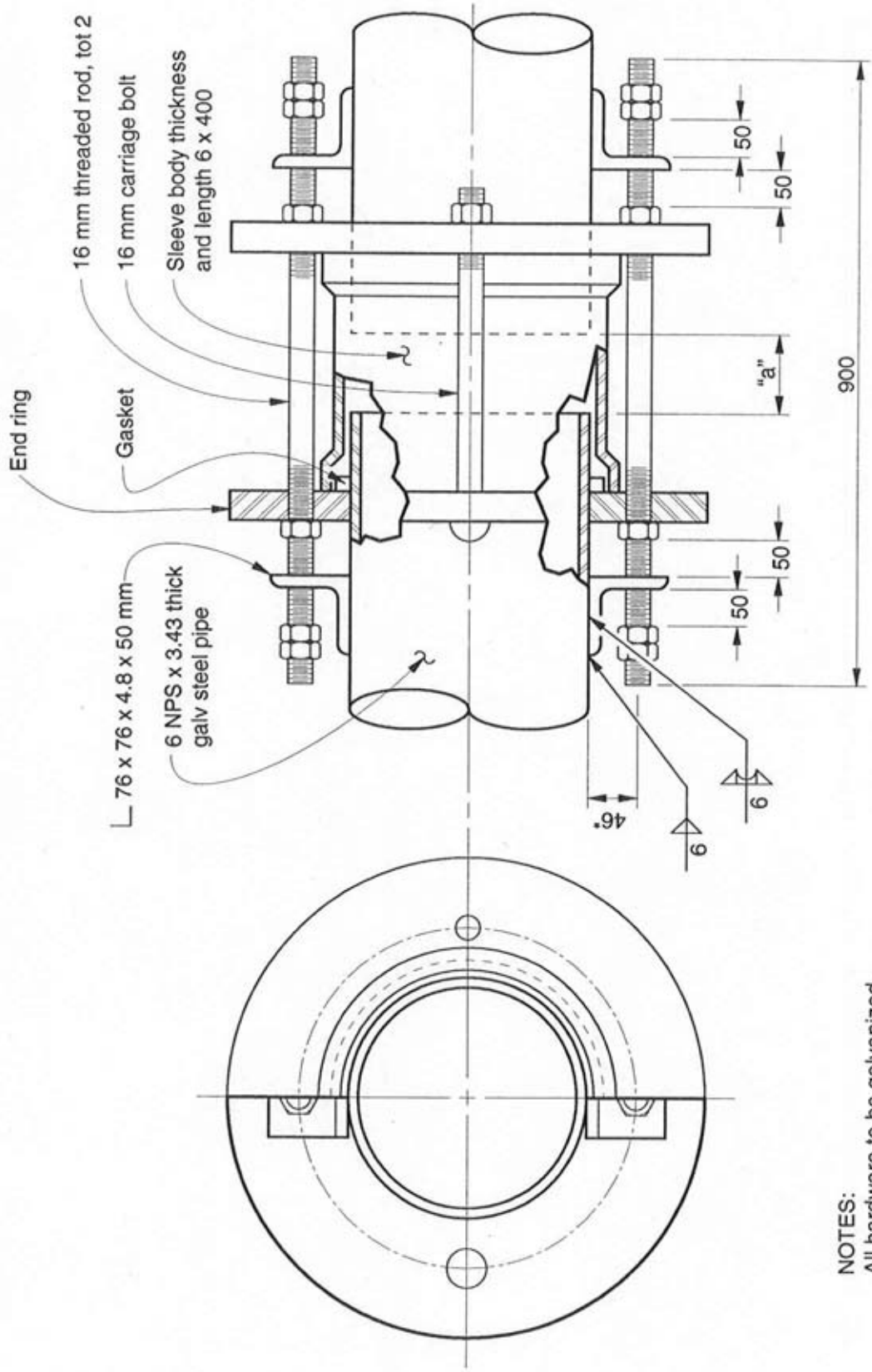

Note to Designer:
Adjust diameter of pipe to suit project pipe size.

EXPANSION COUPLING
No Scale

NOTES:
All hardware to be galvanized.
For "a" dimension see Bridge Plans.
* Adjust dimension to suit coupler end ring bolt circle.
Expansion coupling with 4 bolts shown. Coupling with a greater number of bolts is allowed.

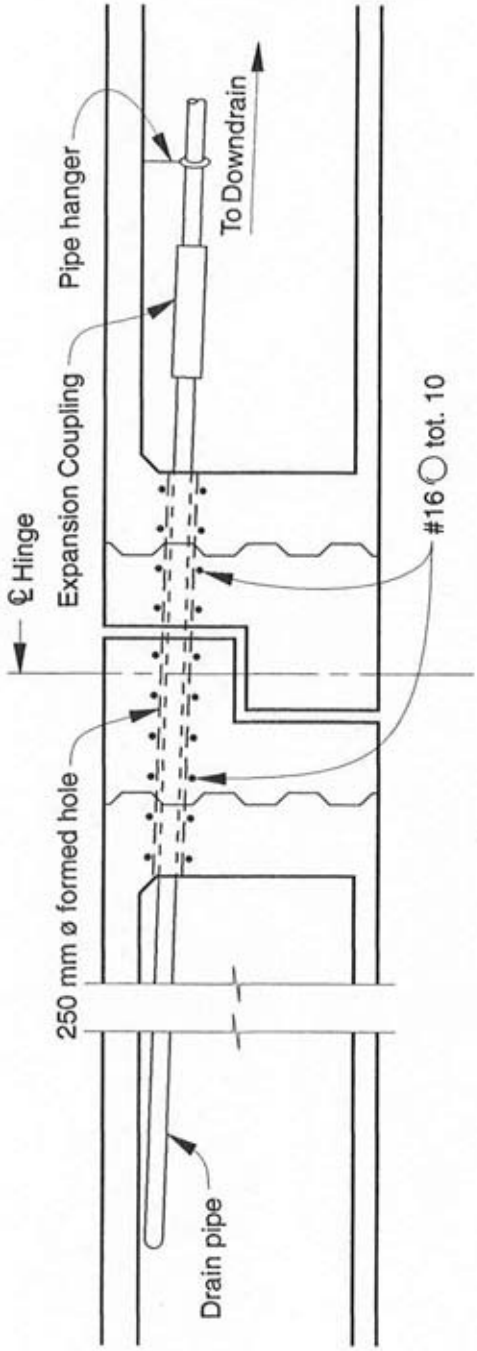

DECK DRAIN PIPE DETAIL THRU HINGE
No Scale

Avoid if at all possible by locating hinge cantilever on high side during initial frame layout.

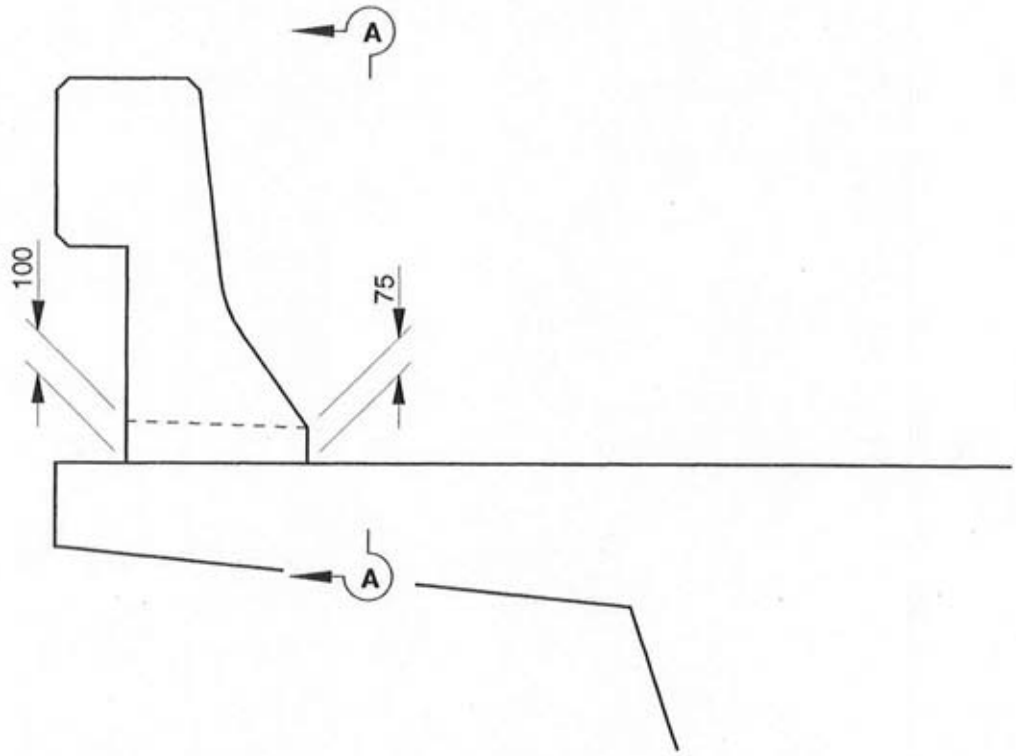

Section

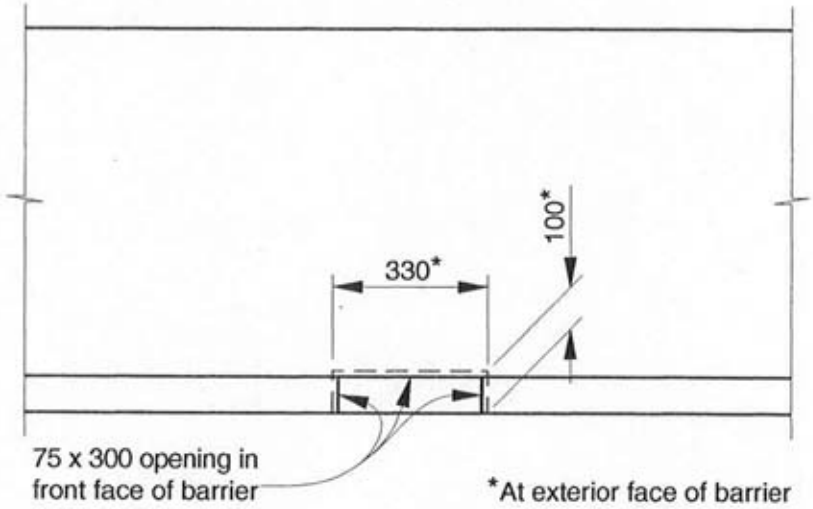

Elevation A-A

SCUPPER DETAIL
No Scale

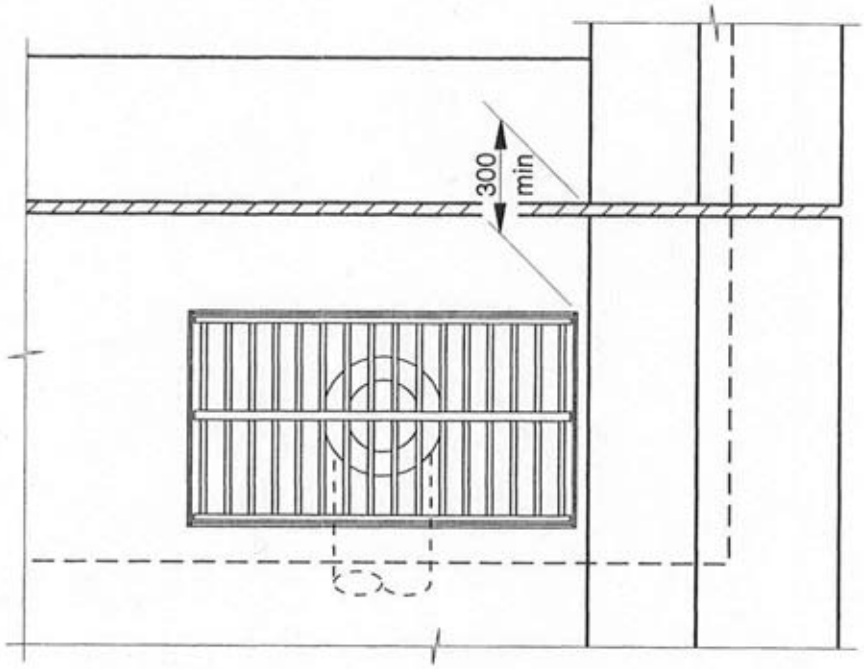

DOUBLE DECK DRAIN
No Scale

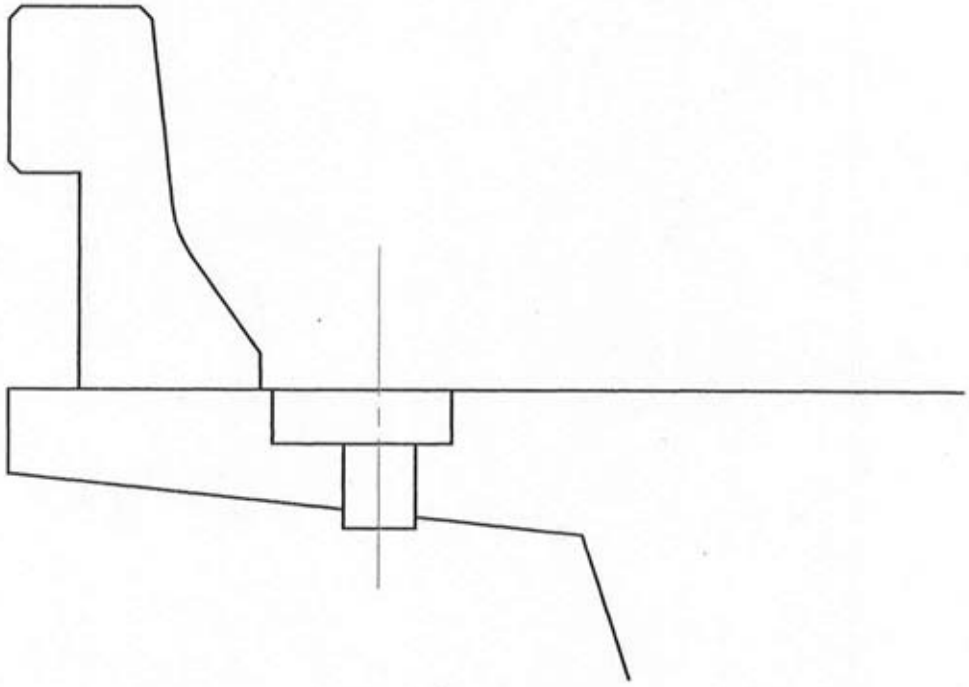

DROP THRU DECK DRAIN
No Scale

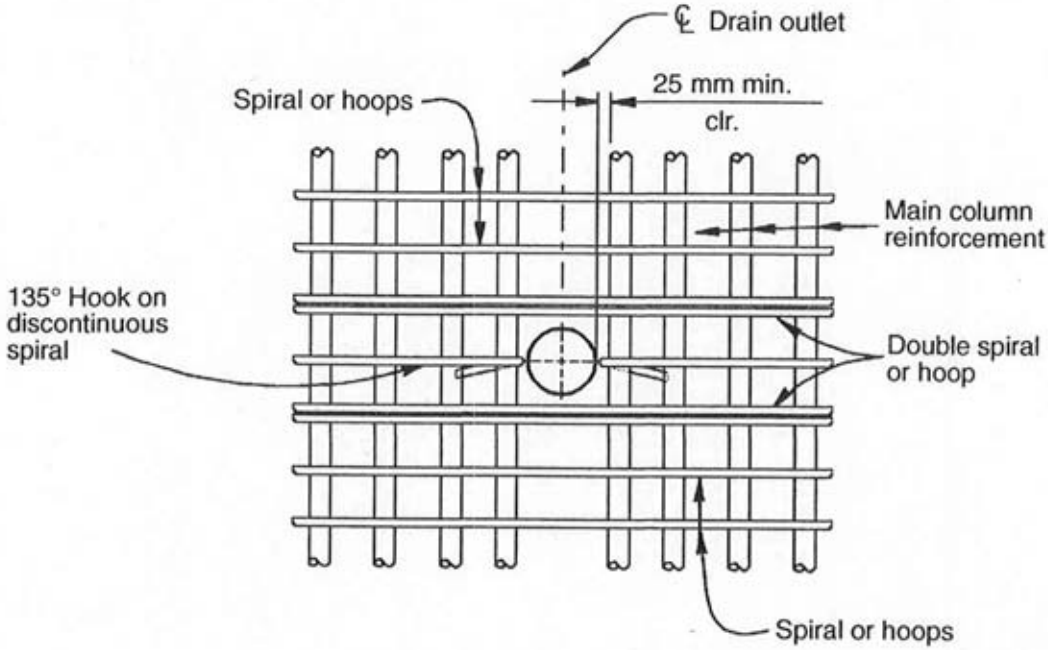

Adjust spacing of main column
reinforcement to clear drain outlet

COLUMN REINFORCEMENT AT
DRAIN OUTLET
No Scale