20-9 SPLICES IN BAR REINFORCING STEEL

Introduction

Structural components in bridges often require splicing of the bar reinforcing steel (rebar). Any rebar longer than the standard 18 m length (some rebars may be available in 24 m lengths) will need to be spliced either by: a) lap splicing, or b) butt splicing. Butt splicing is achieved either through the use of mechanical couplers or through welding, and such splicing shall conform to the requirements of either "Ultimate Splice" or "Service Splice."

In "Seismic-Critical" elements (as defined in the next section), the Design Engineer must specify locations where rebar splicing is permitted, as well as require these splices to conform to "Ultimate Splice" specifications as described in this Memo-to-Designers (MTD). In order to achieve this, the Design Engineer shall first identify "Seismic-Critical" elements in a bridge structure.

In general, rebar splices in bridge components that are not "Seismic-Critical" shall meet the requirements of either "Service Splice" or "Lap Splice."

The purpose of this MTD is to provide analysis methods, design procedures, and contract plan detailing examples for the engineering of rebar splices. Attachment 1 provides some background information used in the development of "Ultimate Splice" and "Service Splice."

Classification of Bridge Components

"Seismic-Critical" bridge elements undergo significant post-elastic deformation, dissipate seismic energy, and function through a seismic event. These components are designed and detailed to sustain seismic damage without leading to structural collapse or loss of structural integrity. "Seismic-Critical" elements include, but are not limited to, columns, shafts, and piles in soft or liquefiable soils. Other structural elements such as outrigger bent cap beams, dropped bent cap beams, bent cap beams in "C" bents, and abutment diaphragm walls shall be designed and categorized as "Seismic-Critical" only if they are likely to experience any seismic damage.

The Design Engineer shall identify those bridge components that are to be designated as "Seismic-Critical" during the "Type Selection" meeting.

All other components not designated as "Seismic-Critical" are designed to remain elastic in a seismic event in accordance with Caltrans *Seismic Design Criteria* (SDC). Such elements include the superstructure, footings, seat-type abutment walls, and piles in granular soils. At times, it may be necessary to make an exception and design a non-Seismic-Critical element as "Seismic-Critical" to meet a nonstandard design requirement (see MTD 20-11 for details).

Classification of "Zones" in Bridge Components

In "Seismic Critical" elements, the Design Engineer shall clearly identify the location where splices in longitudinal (main) rebars are not allowed. These locations shall be designated on plans as a "No-Splice Zone." The procedure to identify the "No-Splice Zone" is explained when addressing specific structure types in the following sections. Engineered "Ultimate Splice" in longitudinal rebars are permitted outside the "No-Splice Zone" in "Seismic-Critical" elements.

The "No-Splice Zone" in "Seismic-Critical" elements may be shown on plans either as a fixed dimension or as a fraction of the height or length of the element. In general, where the length of the rebar cage is less than 18 m, no splices in longitudinal rebars shall be allowed.

Various zones within bridge components are established on the basis of the strain demand in main rebars. The strain demand at a cross section is obtained from the moment demand at that cross section and the corresponding moment-curvature relationship. A moment diagram must be drawn to establish the relation between moment demand and moment capacity at key element/ member cross sections.

Classification of Splices in Bar Reinforcing Steel

Splices are classified into three functional categories, "Ultimate", "Service", and "Lap" splices, as shown in Table 1 and Table 2 (see the **Attachment 1**). This identification is based on strain demands in the rebar and splice assemblies.

The Design Engineer shall specify "Ultimate Splice" (see Caltrans Reference Specification: "52ULTS") in longitudinal rebars outside the "No-Splice Zone" in "Seismic Critical" elements. In addition, "Ultimate Splice" shall be specified in all the transverse reinforcement (such as hoops) of a seismic critical element. A list of currently approved types of "Ultimate Splice" can be obtained from the Caltrans Web Page (Key word: "Coupler"), or by contacting The Office of Structure Specifications and Estimates.

The Design Engineer shall specify "Service Splice" (see Caltrans Reference Specification: "52SERV") in main reinforcement of capacity protected bridge components such as footings, bent caps and girders (see SDC 3.4 and 8.1.3). In addition, rebars provided to resist seismic forces from vertical acceleration shall also incorporate "Service Splice" where required (SDC 7.2.2). "Service Splice" is also required in transverse flare reinforcement in flared columns (see MTD 6-1). The location of "Service Splice" must be engineered and shall be clearly identified on contract plans.

Where a pier-wall forms a part of a bridge substructure system, the vertical rebars of the pier walls shall incorporate "Ultimate Splice" where splicing will be required. "Service Splice" is adequate for splicing noncritical horizontal rebars where required.

If a project includes the use of "Ultimate Splice" and/or "Service Splice", then the Design Engineer shall convey this information to the Specifications Engineer through a "Memorandum to Specifications Engineer."

The following sections address splice design and detailing requirements for several specific structure types.

Case 1: Single-Column Bent on Pile Footing

A single-column bent, bending in the transverse direction, is shown in Figure 1. To identify the "No-Splice Zone", the Design Engineer may follow the following steps:

1) Establish the moment diagram (demand) associated with the transverse push of this system as shown in Figure 1 in Attachment 1.
2) Compute the following moment capacities from moment-curvature analysis of the cross-section:

   M_n: Moment capacity of the cross-section corresponding to a concrete strain of 0.003 at extreme compression fiber.

   M_y: Moment capacity of the cross-section corresponding to first yield of a rebar;

   M_p: average plastic moment idealized by balancing the areas between the actual and the idealized curves as shown in Figure 2 in Attachment 1.
3) Identify the zone(s) in the column where the moment demand (transverse bending) exceeds M_y. This zone shall be designated as the "No-Splice Zone."
4) Identify the extent of the "Plastic Hinge Zone." For a column under transverse bending, this zone typically extends into the column for a minimum length of 0.25L from the top of the footing, and typically corresponds to a section with a moment demand of $0.75M_p$.
5) The "No-Splice Zone" that is identified on Structure Plans shall be the larger of the zones obtained from steps 3 and 4 above.

Note: The Design Engineer shall also establish a "No-Splice Zone" based on a moment diagram obtained from the longitudinal push of the bridge. Since a plastic hinge may potentially form at the top of column due to longitudinal movement of the bridge, the allowable splice zone cannot extend to the top of column. Therefore, the allowable splice zone shall be determined based on longitudinal as well as transverse deformation cases.

Case 2: Single-Column Bent on an Enlarged Pile Shaft

This structural system should be designed and detailed to force the plastic hinge to form at the interface of the shaft and the column, where it may be inspected immediately following a seismic event.

The Design Engineer shall ensure that a plastic hinge forms in the column, but not in the shaft. To achieve this, the Design Engineer shall provide a factor of safety, as stated in SDC, between the moment demand and moment capacity in the shaft.

The following recommendations are made regarding detailing and splicing of reinforcement:

1) The main bars assembled in the column cage shall be extended into the shaft in a staggered formation with minimum recommended embedment lengths of 2x $D_{c,max}$ and 3x $D_{c,max}$, where $D_{c,max}$ is the larger cross-section dimension of the column. This practice ensures adequate column bar anchorage in case the plastic hinge damage penetrates into the shaft. Any reduction in these embedment lengths shall be based on future testing.

2) Fifty (50) percent of the column confinement steel, as placed in the plastic hinge zone, shall be extended into the shaft for the embedded portion of the column cage (spacing of hoops or pitch of spiral may be doubled).

3) The confinement steel provided for the top 3x $D_{c,max}$ of the shaft shall be same as that provided in the column plastic hinge zone (i.e., identical transverse rebar and spacing/pitch), but the transverse reinforcement ratio should not be less than 0.5%. The clear spacing between transverse rebars in shafts shall not be less than 125 mm to meet the minimum 125 mm by 125 mm clear window required for proper concrete flow. Bars may be bundled if required.

4) Spacing of the confinement steel provided in the shaft below the top 3x $D_{c,max}$ may be twice of that provided in the top 3x $D_{c,max}$ of the shaft; however, the shear requirements in the shaft shall be satisfied. Note that the maximum moment and maximum shear in the shaft may not occur at the same section.

5) If the main rebars in shafts are spliced, then these splices shall conform to the "Ultimate Splice" criteria with appropriate pre-qualification testing. Production sampling of the "Ultimate Splice" at these locations may be waived if the behavior of the shaft is essentially elastic. This information shall be conveyed by the Design Engineer to the Specifications Engineer. On the other hand, full production samplings of the main rebar splices are required if potential damage to the shaft is suspected.

6) Hoops and spirals in shafts shall meet the "Ultimate Splice" specification. In general, hoops are preferred over spirals in shafts.

Case 3: Single-Column Bent on Prismatic Pile Shaft

In this case the plastic hinge will form below ground typically at depths of two to five times the diameter of the shaft. This depth will increase significantly for shafts in soft or liquefiable soils. There will be a considerable cost increase if an attempt is made to force the plastic hinge to form closer to the ground level. The following recommendations are made regarding detailing requirements for reinforcing steel in prismatic shafts:

1) The potential plastic hinge zone shall be identified based on a moment diagram for the column-shaft combination including the soil "p-y" data. Where appropriate, a 15 m zone, centered on the potential plastic hinge location, shall be designated as the "No-Splice zone." Splices outside this zone shall meet the "Ultimate Splice" requirements.
2) Hoops and spirals in prismatic column-shafts shall meet the "Ultimate Splice" specification. In general, hoops are preferred over spirals in shafts.

Case 4: Multi-Column Bent on Pinned Footings

In multi-column bents with pinned footings, plastic hinges form at the tops of columns. The cap beams shall be stronger than the columns as required by Caltrans SDC.

Multi-column bents that are pinned at base of columns are treated as an inverted cantilever with the top 0.25L defined as the plastic hinge zone. A "No-Splice Zone" shall be designated based on moment diagrams as explained in Case 1, and the plastic hinge zone. The Design Engineer may seek a waiver from the Strategy or Type Selection committees for very tall columns where the 0.25L rule cannot be met. Where appropriate, a 15 m zone starting at the top of the column cage may be designated as "No Splice Zone."

Hoops, spirals, and main column bars shall meet the "Ultimate Splice" specification.

Case 5: Multi-Column Bent on Enlarged Shafts

Columns in multi-column bents on enlarged shafts may be pinned or fixed to the shafts. In either case, the Design Engineer shall provide a factor of safety between the moment demand and moment capacity in the shaft as stated in Caltrans SDC. A complete moment diagram is required for the system including soil "p-y" data, moment demand values, and moment capacity values.

Where appropriate the top 15-m segment of the shaft shall be designated as a "No Splice Zone." For other requirements, refer to item (5) in Case 2 above.

Hoops and spirals in shafts shall meet the "Ultimate Splice" specification. In general, hoops are preferred over spirals in shafts.

Case 6: Multi-Column Bent on Prismatic Pile Shafts

The design procedures and the rebar splice requirements for this case are similar to those of a single-column bent on prismatic pile shaft.

Recommendations on the use of Hoops and Spirals

To assure good seismic performance as well as to facilitate ease of construction, the use of hoops is preferred over that of spirals in seismic critical elements. In addition, hoops have the following advantages:

A) The discrete nature of hoops provide an advantage in seismic critical elements since the failure of one hoop does not lead to a premature plastic hinge failure. When a plastic hinge forms, the confinement steel is exposed as a result of a loss of cover concrete. With additional deformation, the strains in the transverse reinforcement increase. Any break at a single location in spiral reinforcement may cause a considerable length of the spiral to become ineffective, and lead to plastic hinge failure.

B) The process of sampling and testing hoop splices for QA/QC purposes is easier than that in the case of spiral splices.

The following table lists minimum hoop diameters that can be fabricated by most rebar fabricators from a specific rebar size.

Rebar designation	Hoop diameter (mm)
#13, #16	300
#19	350
#22	560
#25	760

Table 1: Minimum hoop diameter

In general, this MTD makes the following recommendations:

a) Hoops with "Ultimate Splice" shall be used over the entire length of columns, shafts and piles (seismic critical elements) having a diameter of 1000 mm or larger. In addition, in elements having a smaller diameter, use hoops with "Ultimate Splice" for their entire length whenever it is practical (see Table 1).

b) In seismic critical elements having a diameter smaller than 1000 mm, when it is not practical to provide hoops, use spiral reinforcement with the following restrictions:

   i) The "Plastic Hinge Zone" shall be designated as the "No Splice Zone" for the spirals.

   ii) Splices in spirals outside the "Plastic Hinge Zone" shall conform to the requirements of "Ultimate Splice". Since the production of mechanical couplers, as well as QC/QA testing procedures for these splices, are still under development, modifications to the sampling requirements in construction specifications may be required. The Design Engineer should also explore the possibility of not permitting any splicing of spirals.

c) Combination of spiral reinforcement with hoops shall not be used.

Special hooks in Spiral reinforcement.

The spiral reinforcement is generally discontinued at the column-soffit interface to facilitate placement of main rebars in the cap beam, and is restarted just above the soffit rebars. Similarly, the spiral reinforcement may be discontinued at the column-footing interface. Since the reinforcement is subjected to high strains at these locations of a seismic critical element, the spiral reinforcement shall terminate in, and begin with, a special hook.

The special hook is obtained through an extra turn in the spiral coil together with the tail, equal in length to the diameter of the rebar cage, passing through the core of column. The pitch of the spiral reinforcement at these locations shall be no more than half of the pitch of the spiral at a typical section. This hook should be shown on Structure Plans.

Special terminating details for Spiral Reinforcement

Special terminating details are required at the extremities of the column rebar cage when spirals are used. The spiral rebar at these locations is subjected to relatively lower levels of straining. The details shown in Figure 1 should be used at these terminal points, and should be shown on Structure Plans. In-lieu of these details, the special hook described in the preceding section may be used.

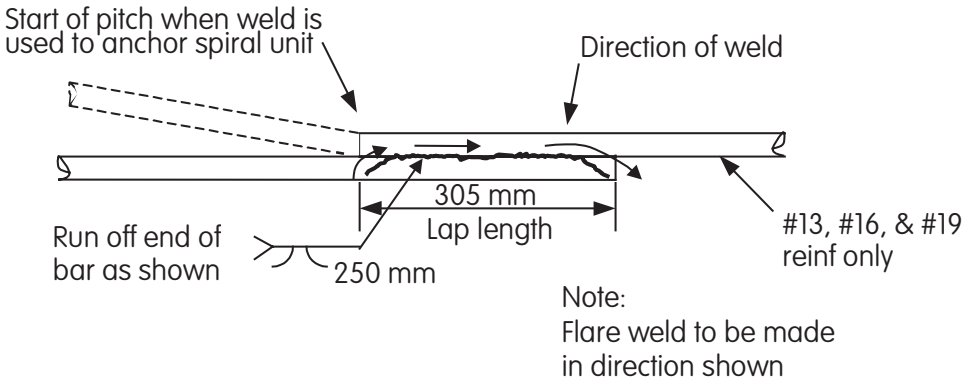

Welded Lap Spiral Anchor

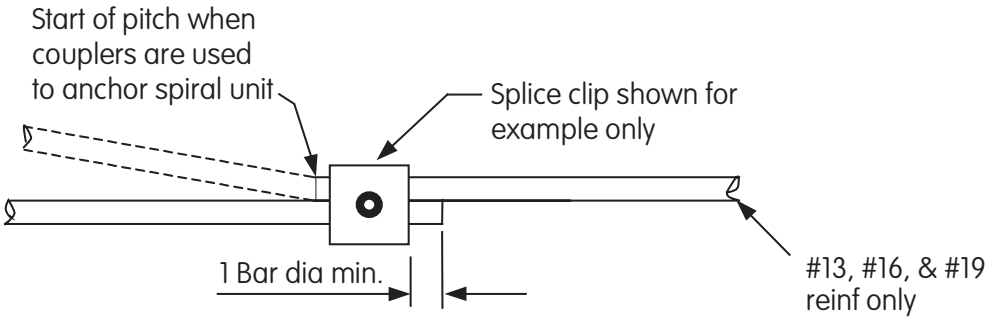

Mechanical Lap Anchor

Note: The spiral anchor detail is only permitted at the ends of spiral cages that are well anchored into the footing or bent cap.

Figure 1: Spiral End Anchor Detail

Illustrative Examples

Two detail sheets, one showing CIDH pile details, and one showing columns details are attached with this MTD. These sheets are provided for illustrative purposes only and to help the Design Engineer in specifying details such as "No-Splice Zone" and specifying regions where "Ultimate Splice" is required.

References:

1) *Caltrans Seismic Design Criteria* (SDC) .
2) Caltrans MTD 20-6: Seismic Strength of Concrete Bridge Superstructures.
3) Caltrans MTD 20-11: Establishing Bridge Seismic Design Criteria
4) Caltrans MTD 6-1: Column Analysis Considerations
5) Caltrans Reference Specification: "52ULTS" and "52SERV."

Richard Land

Deputy Chief, Engineering Services

Structure Design

MR:kds, pkml

ATTACHMENT 1

Strain Requirements in an "Ultimate Splice"

The following tables list the maximum allowable strain demands and the minimum required strain capacities in the base rebar and the splice assemblies for each category of splices. The proposed strain values are based on many pull tests of reinforcing bar conducted by METS.

Table 1 Strain Demands and Capacities for Bars and Splices in A706M Steel

Splice Category		Minimum Required Strain Capacity		Maximum Allowable Strain Demand	Factor of Safety (F.S.)
		Rebar Only	Rebar + Splice		
1	**Ultimate**	6% for #36 and larger 9% for #32 and smaller	6% for #36 and larger 9% for #32 and smaller	<2%	3 to 4.5
2	**Service**	Same as above	>2% for all rebar sizes	<0.2% (yield strain of rebar)	>10
3	**Lap** (or Welded/Mechanical Lap in lieu of Lap)	Same as above	>0.2%	<0.15% (unfactored loads) <0.2% (factored loads)	1.33

The factor of safety (F.S.) is defined as the minimum required strain capacity divided by the maximum allowable strain demand in a splice.

Table 2 Strain Demands and Capacities for Bars and Splices in A615M, Grade 300 to A706M Splicing

Splice Category		Minimum Required Strain Capacity		Maximum Allowable Strain Demand	Factor of Safety (F.S.)
		Rebar Only	Rebar + Splice (strain measured on Grade 300 side only)		
1	**Ultimate**	9% for #36 and larger 12% for #32 and smaller	9% for #36 and larger 12% for #32 and smaller	<2%	4.5 to 10
2	**Service**	Same as above	>2% for all rebar sizes	<0.2% (yield strain of rebar)	>10
3	**Lap** (or Welded/Mechanical Lap in lieu of Lap)	Same as above	>0.2%	<0.15% (unfactored loads) <0.2% (factored loads)	1.33

The issue of a high factor of safety (F.S.) needs to be addressed because of the confusion it may create in comparison to the more traditional F.S. values. Typically, in linear/elastic analysis, a F.S. of 2 is generally adequate and acceptable. Therefore, a F. S. of 10 required for reinforcement strain in a non-linear seismic approach may seem excessive. As an example, consider two sections in the column of a single-column bent under transverse bending. In the first section, taken at a location where the moment demand is M_y, the strain demand in the main reinforcement is approximately 0.2%. However, at the second section taken at a distance of distance of 0.15L

ATTACHMENT 1

(L is column height) from the previous section, and towards the footing where the moment would be M_p, the strain demand would be approximately 1% because of the non-linear nature of the stress-strain curve for a rebar. Therefore, a small change in the location of a section (15% of column length) could cause a five-fold increase in strain in the reinforcement, thereby necessitating high F.S. values such as 10.

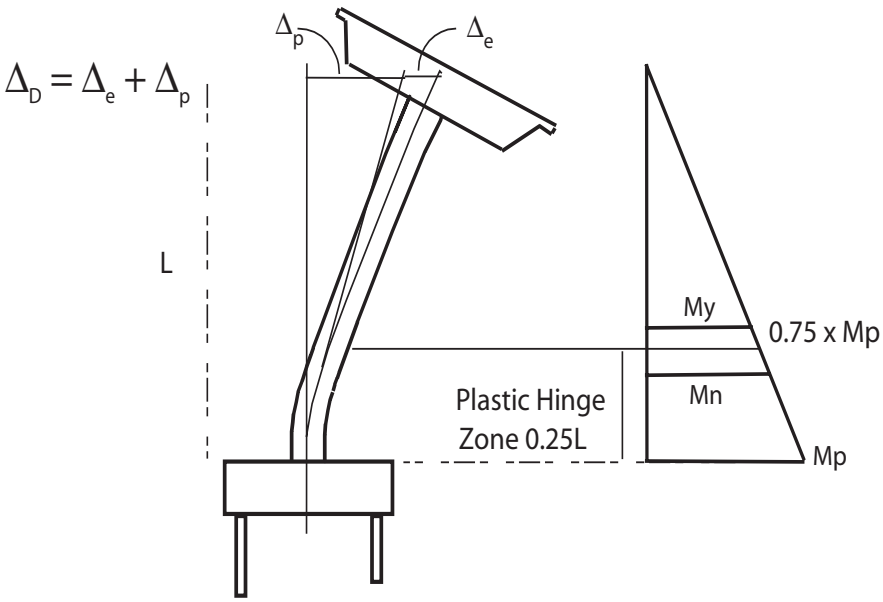

Figure 1 Moment Demand on Single Column Bents

ATTACHMENT 1

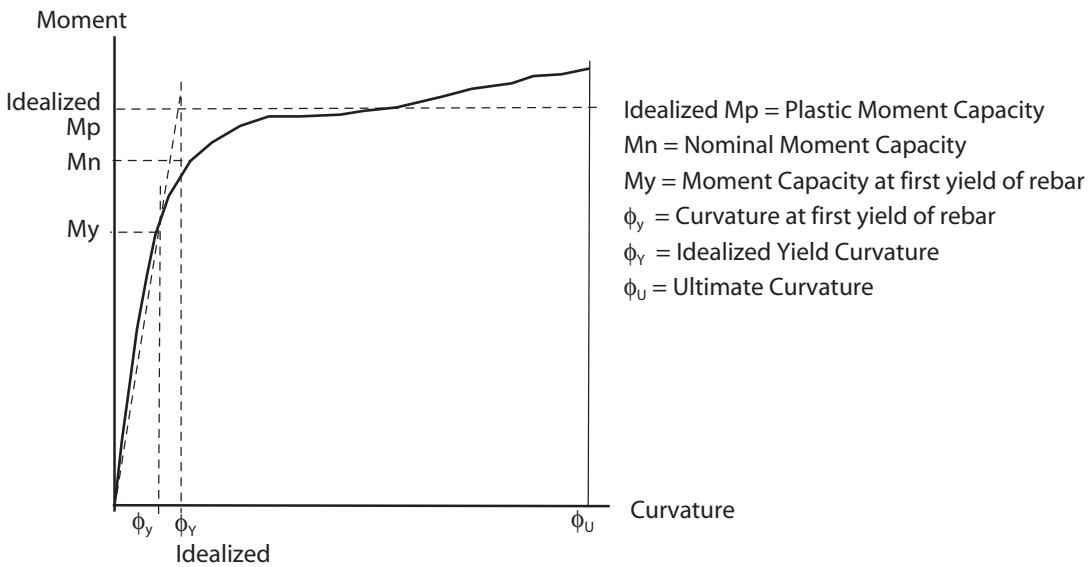

Figure 2 Moment-Curvature Curve

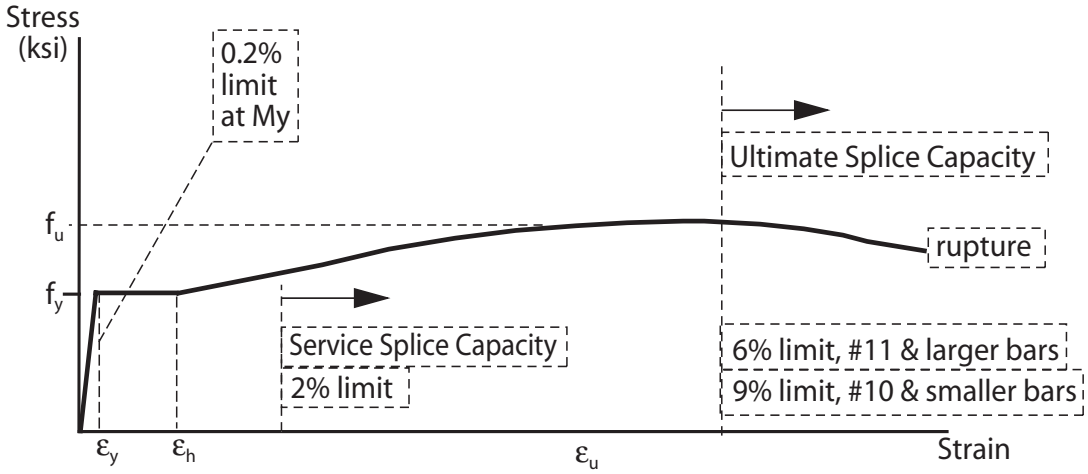

Figure 3 Stress-Strain Curve