5-1 Abutments

General

Abutments support the superstructure and roadway embankment, enhance serviceability of the superstructure, provide a smooth transition from roadway to bridge, and can potentially enhance seismic response of the bridge. In design of the abutments, the designer needs to pay attention to layout and geometry of the abutment, superstructure loads and movements, drainage issues, structure approaches, and seismic effects. Furthermore, water flow and possible scour need to be considered for bridges crossing waterways.

Type Selection of Abutments

Based on rigidity of the connection to the superstructure, abutments are classified as integral and non-integral. Integral abutments can be further categorized as diaphragm abutments, bin abutments, and rigid frame abutments. Non-integral abutments can be categorized as seat-type abutments (formerly sub-divided as short seat and high cantilever abutments), and strutted-type abutments. General layout and typical details of abutments are shown in Bridge Design Details (BDD) manual.

Based on proximity of the abutment stem to the traffic passing under the bridge, abutments can be classified as open-end and closed-end. Open-end abutments are placed on the top of the approach embankment to provide an open appearance to the adjacent traffic.

The two most commonly used abutments are the short seat and diaphragm types. The seat-type abutment is a non-integral abutment acting as an independent structural component of the bridge. The main components of a seat type abutment are back wall, stem, wing walls, and foundation. The lateral soil pressure is mostly resisted by the stem, which acts similarly to a retaining wall. To simplify analysis, the horizontal load at the bridge bearings supported by an abutment is assumed as a percentage of the superstructure vertical reaction force caused by dead load and additional dead load. The horizontal load represents the effect of movements due to temperature fluctuations, post-tensioning, creep, and shrinkage that act at the level of bearing pads.

The main advantage of the diaphragm abutments is the lower initial construction cost, however application of this type of integral abutment is mostly limited to short structures. Movements of the superstructure due to temperature fluctuations, post-tensioning, and creep and shrinkage are transferred to the abutment and the designer needs to consider these effects by modeling the diaphragm abutment and superstructure together. Furthermore, backfill soil pressure causes internal forces in the superstructure that must be included in superstructure analysis and design. Refer to Memo to Designers (MTD) 5-2 for applications and limitations of the diaphragm abutments.

High cantilever, bin, rigid frame, and strutted abutments are the less commonly used abutment types. They are typically used for in-kind bridge widening, unusual sites, or in geometrically constrained urban locations. Rigid frame abutments can be used in new applications, but their use is generally limited to single span tunnel type (cut-and-cover) connectors and overhead structures that provide passage through a roadway embankment. These abutment types have a high initial cost and present a closed (tunnel like) appearance to approaching traffic by placing the structure supports adjacent to traffic. At overcrossings, these abutment types usually preclude widening of the highway below without complete bridge replacement.

Another type of abutment may be a combination of an end pier (bent) and a retaining structure which is isolated from the superstructure and end pier. The retaining structure is used to support the embankment. The gap between the end pier and retaining structure must be wide enough to avoid contact of the two isolated structures due to movements caused by earthquakes. Design of the end pier will be similar to an intermediate pier, however effects of torsion due to unbalanced loading of the end bent needs to be considered in design of the substructure components.

Load and Resistance Factor Design (LRFD) Requirements

Abutments must be designed according to *AASHTO LRFD Bridge Design Specifications* and current California Amendments (AASHTO-CA BDS). Load combinations for abutments will be according to Article 3.4.5 of AASHTO-CA BDS. In general, abutments must be designed for Service, Strength, Construction, and Extreme Event load combinations. Refer to MTD 3-1 and 4-1 for design of abutment foundations.

Under service load combinations the abutment foundation checks include settlement and eccentricity for shallow foundations, and settlement and horizontal movement for deep foundations. Movement analysis at abutments is complex; as horizontal movement, vertical displacements, and footing rotation, are all possible causes of structural damage or long-term maintenance issues. To control these displacements, AASHTO-CA BDS establishes safe levels of support settlement under the Service-I load combination. Furthermore, AASHTO-CA BDS allows case-specific increases in the acceptable settlement levels if the safety of the superstructure is verified through more refined analysis. (Refer to Article 3.4.1 of California Amendments). Permissible horizontal load for deep foundations corresponds to an allowable horizontal movement of traditionally 0.25 in. at the pile cut-off point. AASHTO-CA BDS limits the maximum LRFD Service-I load that can be applied to the pile to the permissible horizontal load.

The factored loads calculated at strength and construction limit states are used to check the bearing and sliding capacities of shallow foundations. For deep foundations, the factored loads are given to the Geotechnical Designer (GD) to provide tension and compression tip elevations for deep foundations. Battered driven piles are frequently used at abutments to

increase shear capacity of the foundation system. The horizontal component of the battered pile axial force can be included in calculation of shear capacity of the foundation.

Horizontal Loading and Soil Pressure

Rotation of the abutment foundation due to horizontal loading will result in stem movements and therefore will affect the mobilization of the soil behind the abutment. The level of soil mobilization will affect the lateral earth pressure that is resisted by the abutment. Designers may use an active pressure coefficient, k_a, to calculate the embankment lateral earth pressure behind the non-integral abutment. The development of the passive lateral earth pressure acting in front of the abutment needs large movement of the abutment and well-compacted soil next to the abutment toe; therefore caution must be used when estimating contribution of passive pressure to resistance. The maximum passive earth pressure coefficient, k_p, assumed for LRFD service and strength limit states analysis is 1.0. Use of any higher value needs to be discussed and approved in a meeting between Project Engineer (or Structure Designer), Substructure Specialist, and Geotechnical Designer prior to the Type Selection meeting. A more detailed movement analysis may be required for non-ordinary abutments to estimate lateral earth pressure coefficients.

The horizontal and vertical components of the live load surcharge acting on the embankment must be considered in abutment analysis. In abutments constructed in soft soils, downdrag may develop extra forces in the piles/shafts. In that case, factored downdrag forces must be included in foundation design.

Alternative Backfill Materials

The use of slurry cement backfill for abutments is not permitted. Slurry cement backfill may exert higher lateral forces to the abutment (when fresh and compared to earth backfill) and cause long-term drainage problems. Furthermore, nonlinear soil springs, commonly used to model the resistance of the abutment backwall and adjacent soil for seismic analysis of the superstructure are likely to be inaccurate with slurry cement backfill. Application of lightweight concrete (such as cellular concrete) as backfill will require a design exception.

Scour Effects

When the structure is on or adjacent to a waterway, the effect of scour must be considered from the early stages of planning and design. The 100-year return period flood (Q100) is the default flood used for scour design. However, floods with shorter or longer return periods (e.g. 50-year and 200-year) may also need consideration depending on the project needs.

Communication between the structural, geotechnical, and hydraulics engineers should start in the early stages of design. Waterway and associated environmental constraints affect the selection and locations of the abutments and pier(s). Some projects may require considering alternative span(s) or total bridge lengths to optimize the design. Generally, abutments are designed assuming that backfills are adequately drained. Reanalysis and adjustments in design may be required when site conditions vary from this assumption.

The effect of scour must be considered in estimating the required embedment of the spread footing or pile cap. It must also be considered for the geotechnical design of deep foundations. Scour at bridge approach encroachments can be complex. Abutments should be founded outside of the waterway boundaries, whenever practical. The hydraulics engineer should be consulted during the design of abutments and piers which are constructed within the waterway. The hydraulics engineer must be also consulted for layout of the wing wall or return wall to improve water flow and to minimize hydraulic effects. Refer to AASHTO-CA BDS for water and stream pressure (WA) load factors.

Seismic Design Requirements

The objective of the Seismic Design Criteria (SDC) for ordinary standard bridges is to prevent collapse of the bridge. This performance criteria is known as the no-collapse criteria. The SDC's no collapse criteria specifies the abutment back wall and shear keys as sacrificial components, meaning that damage in these components is accepted to prevent damage to other protected components.

The abutment back wall and the resisting soil behind the back wall affect seismic analysis of the bridge in the longitudinal direction (Figure 1). Abutment shear keys resist minor earthquakes in the transverse direction (Figure 2), however the shear keys may act as a fuse and break in a major earthquake to protect the foundation system and to avoid costly repairs.

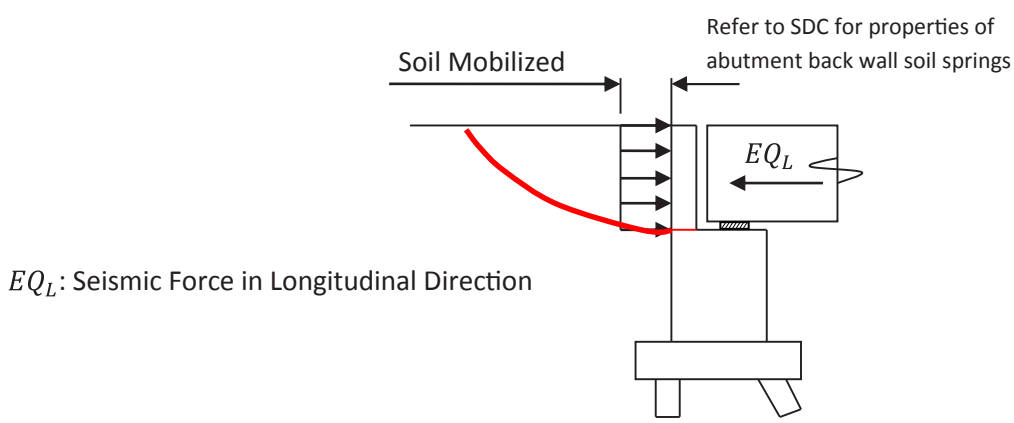

Figure 1 – Seismic Resisting Components (Longitudinal Direction)

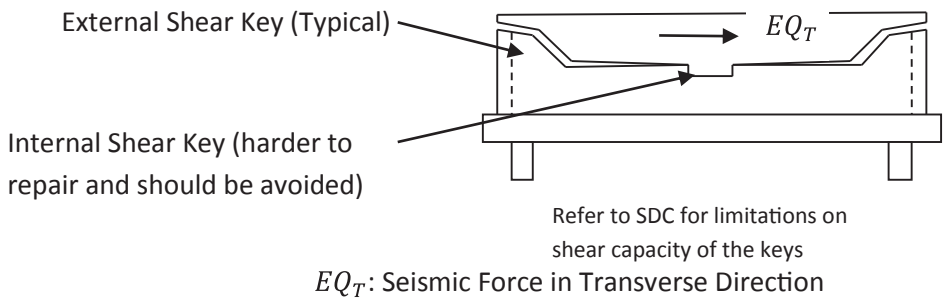

Figure 2 – Seismic Resisting Components (Transverse Direction)

For abutments of ordinary standard bridges constructed in competent soil (as defined in SDC), and with height limitations specified in Article 3.4.5 of the AASHTO-CA BDS, no increase in soil active pressure due to seismic excitations is required. However, GD should consider seismic effects in global stability analysis of the slope. Furthermore, sacrificial components of abutment such as shear keys must be designed according to SDC requirements. If abutments are used in non-competent soils, or where the height limitations specified in the AASHTO-CA BDS are not met, then the increase in soil pressure is on a case by case basis which must be discussed and approved before the type selection meeting

Seismic Analysis of abutments in non-competent soil is complicated. Liquefaction, lateral spreading and seismic downdrag resulting from earthquakes add to the complexity of analysis. Battered piles shall not be used in abutments subjected to seismic downdrag.

The non-integral abutment gives the designer more control over the amount of earthquake force the abutment can resist, but also introduces the potential of unseating the superstructure. Unseating of the superstructure would result in collapse of the end span. To eliminate unseating, the seat width of non-integral abutments must meet the minimum seat width requirement specified in the SDC. The superstructure is restrained longitudinally by the abutment back wall and approach embankment, and transversely by shear keys.

The longitudinal earthquake force required to mobilize the backfill for the full height of the abutment is generally much larger than what a practical sized back wall and adjacent backfill can resist. Therefore, the back wall is designed to fail before damaging forces can be transmitted to the lower portion of the abutment. The longitudinal stiffness assumed for the seismic analysis must be based on mobilizing only the soil equal to the depth of the superstructure. This stiffness will result in larger earthquake displacements at the adjacent bents than what would occur if the total stiffness were mobilized. An increase in longitudinal displacements is generally unavoidable but is preferred in order to mitigate damage to the abutment below the soffit level. The effects of larger displacements at the bents must be considered in the design.

Construction of abutments with heights exceeding 20 feet may require complex temporary support systems for reinforcing bar assemblage. In order to facilitate the construction process, for seat type abutments in competent soil, lap splices are acceptable for vertical bars at the front face of the stem and L-shape bars used at the back face. For any other conditions service splices must be used.

Limited damage to abutments from a major earthquake is expected, and can be tolerated; however damage to the piles is prohibited. The main purpose in evaluating the force effects and movements at the abutments is to control damage to the abutment's non-ductile components (foundation, stem, and wing walls) and at the same time to obtain a realistic estimate of the displacements at the intermediate supports. The latter is done by using non-linear springs to model the back wall and adjacent backfill soil for global analysis of the bridge.

For design of transverse shear keys in seat type abutments supported on deep foundations, the limiting transverse earthquake load may be approximated by considering the ultimate shear capacity of one wing wall plus the ultimate shear capacity of the piles. This force is the maximum force that is expected to be transmitted through the keys. To reduce possible damage to the piles, transverse keys must be designed with shear force capacity of 50% to100% of the summation of ultimate shear capacity of one wing wall and 75% of the ultimate shear capacity of the piles. When the transverse earthquake load exceeds the capacity of the keys, the transverse stiffness for the seismic analysis is assumed to be zero and a released condition should be used in the seismic analysis. This release will result in a larger design lateral displacement at the adjacent bents.

When spread footings are used, the shear keys must be designed for a seismic load of 50% to 100% of the gross dead load reaction at the bottom of the footing. When using SDC 7.8.4 requirements, designers may use the factor of 75% for spread footings supported on soil, and 100% for footings in rock. In general, engineering judgment should be used based on geometry of the footing and type of the soil. For sliding resistance of spread footings under Strength and Construction load combinations refer to AASHTO-CA BDS.

Shear keys for seat abutments that are highly skewed, offer limited resistance in restraining the superstructure from rotating away from the abutment. If possible, the designer should reduce the skew of the abutment, even at the expense of increasing the bridge length. This recommendation is especially applicable to long connector structures where large earthquake displacements and force effects are anticipated at the abutments.

Limitations on the Use of Shallow Foundations (Spread Footings):

Earthquake action tends to densify both the roadway embankments and the foundation material under embankments. As many roadway embankments tend to be granular in nature, significant densification and, therefore, settlement of the embankment can be expected during a major earthquake. Excessive settlement could cause significant damage to the superstructure; therefore use of shallow foundations (spread footings) for abutments may be problematic in certain conditions. Table 1 summarizes limitations on the use of shallow foundations at abutments constructed in competent soil. For abutments constructed in non-competent soil (marginal or poor soil, including soft or liquefiable) deep foundations (piles/shafts) must be used, unless an exception is submitted and approved.

Table 1- Seismic Limitations on the Use of Spread Footings at Abutments

Superstructure Type	Bent Footing Type	Height Limitation	Competent Soil	
			PBA < 0.6g	PBA ≥ 0.6g
Single -Span (Non -integral Abutment)	NA	H ≤ 36′	Y	Y
		H > 36′	Y	E
Single -Span (Integral Abutment)	NA	H ≤ 10′	Y	Y
		H > 10′	Y	E
Multi-span (Non -integral Abutment)	Shallow foundation	H ≤ 36′	Y	Y
		H > 36′	Y	E
	Deep Foundation	H ≤ 36′	Y	E
		H > 36′	E	E
Multi-span (Integral Abutment)	Shallow foundation	H ≤ 10′	Y	Y
		H > 10′	Y	Y
	Deep Foundation	H ≤ 10′	Y	E
		H > 10′	E	E

In the above table:
PBA : Peak Bedrock Acceleration

H : Height of abutment as shown in Figure 3.

Y : Yes, spread footing can be used.

E : Exception is needed. Refer to MTD 20-11

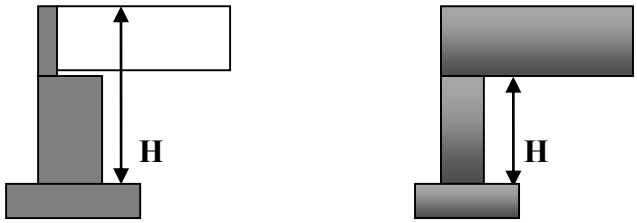

Non - Integral Type Abutment (with/without piles)

Integral Type Abutment (with/without piles)

Figure 3 – Definition of Abutment Height for Seismic Classifications

Seismic Down-drag and Lateral Spreading

For abutments constructed in non-competent soil, an increase in the lateral earth pressure on the stem due to seismic effects, axial forces developed in the piles due to seismic down-drag, and lateral spreading in liquefiable soil must be discussed and approved in the type selection meeting.

Mechanically Stabilized Embankment Abutments (MSEA)

Mechanically Stabilized Embankment (MSE) walls may be used to support approach embankments. Caltrans' recommended practice for using MSE walls at bridge approaches is to place the wall immediately adjacent but isolated from a conventional abutment of any type, or an end bent as shown in Figure 4. The MSE wall carries no bridge loads and there must be an adequate gap to accommodate bridge movements. Furthermore, no special design is required and Caltrans conventional practices for design of MSE walls and abutments can be followed. As the abutment and bridge components behave conventionally, the system is in compliance with Caltrans' Seismic Design Criteria.

The acceptable configurations of non-isolated MSE abutments are called MSEA Types 1 and 2 for Caltrans' projects and are limited to:

- MSEA Type 1 (Figures 5 and 7) that has an abutment on a spread footing fully supported by MSE, typically in a three sided or fully wrapped configuration.
- MSEA Type 2 (Figures 6 and 7) has an abutment with a pile foundation through an MSE of any configuration.

Due to lack of information on performance during earthquake and associated risk, other systems are not permitted at this time.

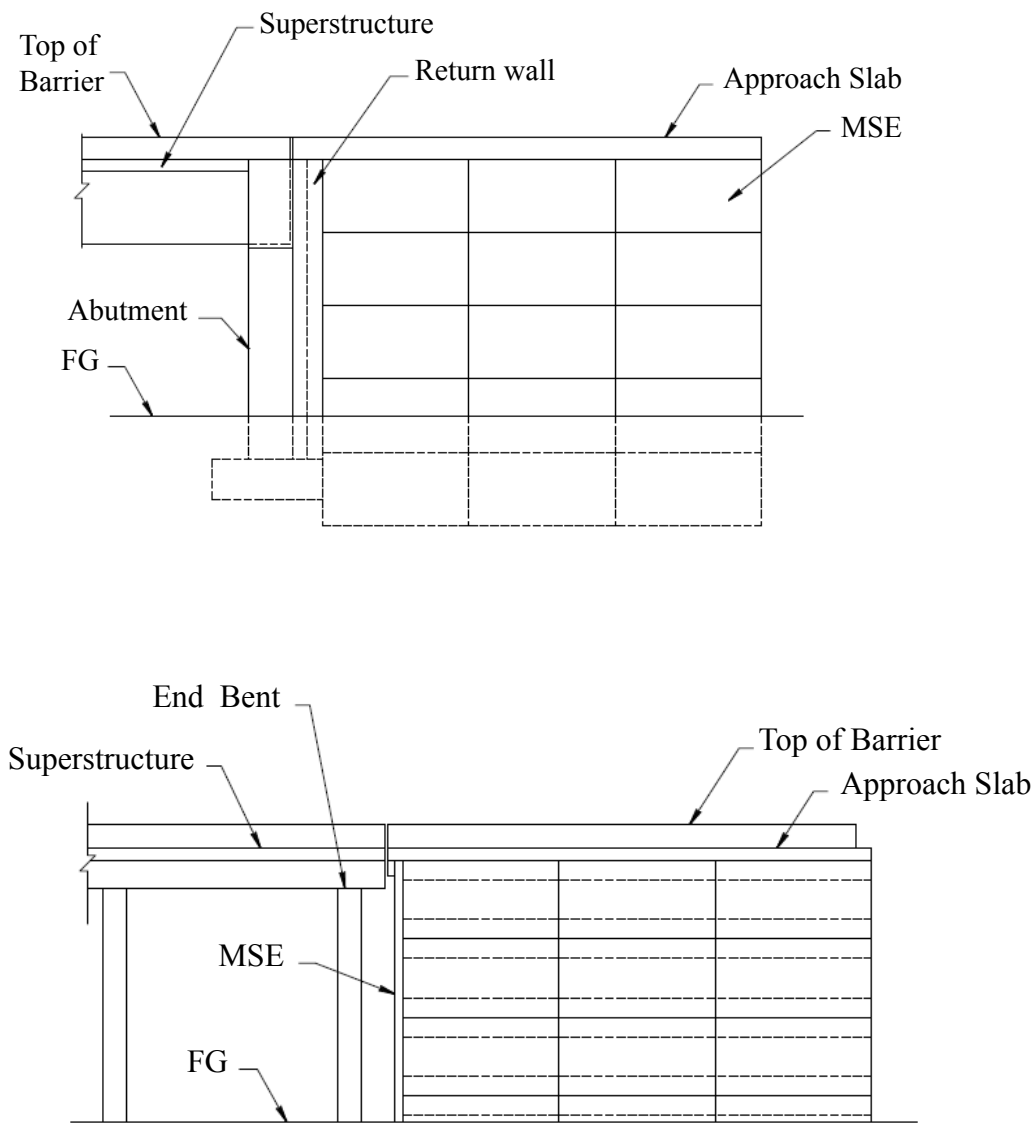

Figure 4- Application of Isolated MSE Walls

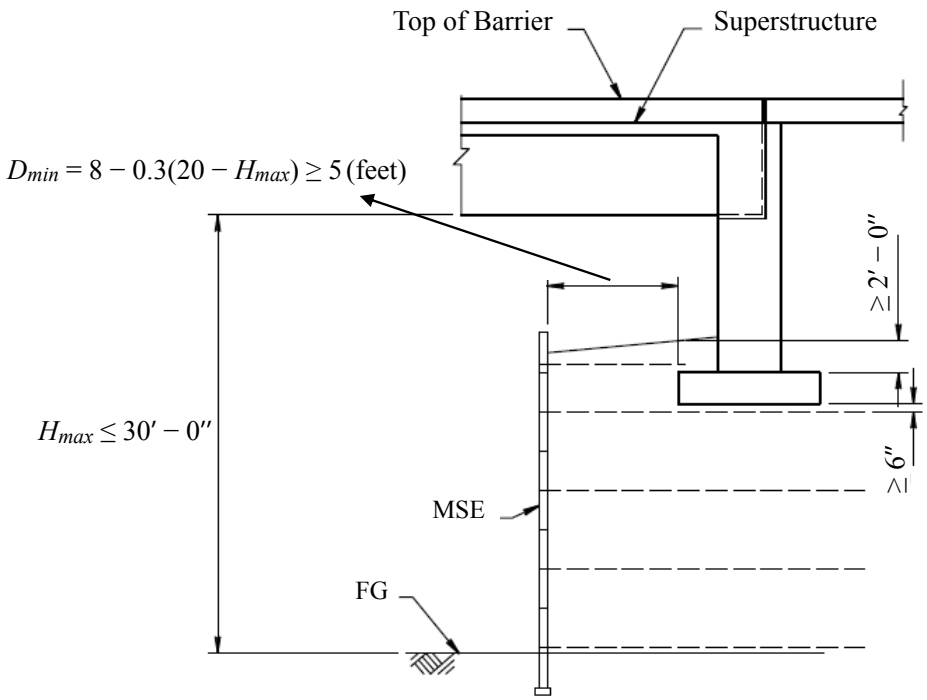

Figure 5- MSEA Type 1 – Spread Footing (not to scale)

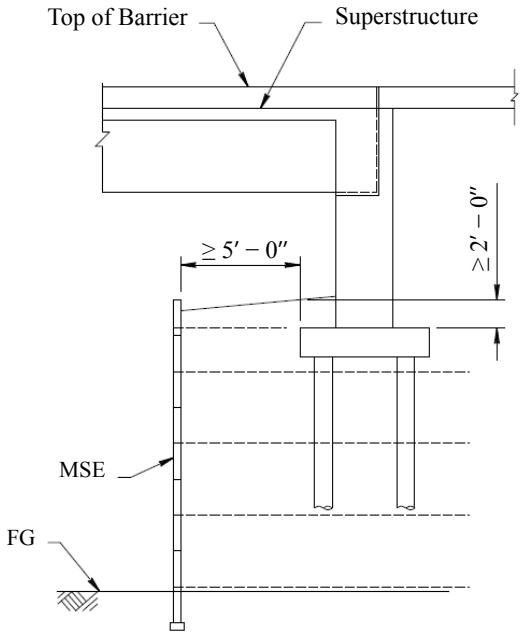

Figure 6- MSEA Type 2- Pile Foundation (not to scale)

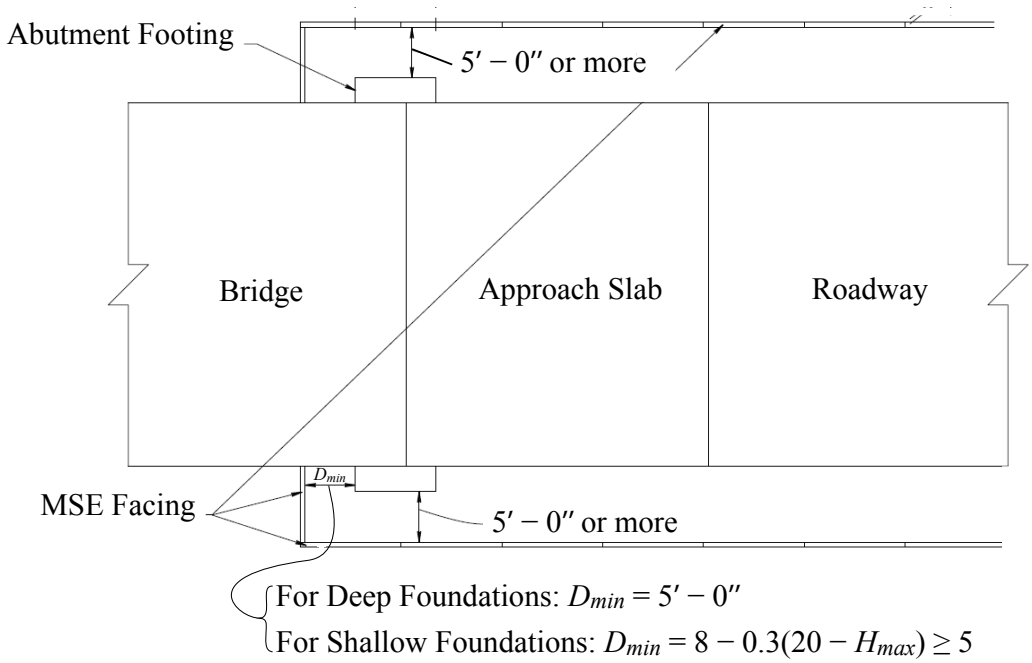

Figure 7- MSEA Types 1 and 2 plan (not to scale)

Limitations of Application of the MSEA

MSEA Types I & 2 integrate conventional abutments together with an MSE wall. The following is a summary of design considerations for these systems:

- MSEA Type 1 (Figures 5 and 7) is an alternative to conventional abutments supported on spread footings in competent soil (as defined in Caltrans SDC). The designer is responsible for designing the spread footing and MSE for all applicable superstructure and substructure loading conditions. Due to concerns with protecting the superstructure during seismic events, this type must only be used for single span bridges on seat type abutments. The spread footing must be designed in accordance to MTD 4-1.
- Conventional abutments supported on piles may use MSEA Type 2 (Figures 6 & 7). The designer is responsible for designing piles adequate for all applicable loading conditions from the bridge and MSE according to MTD 3-1 procedure, and designing the MSE for all applicable loading conditions from all bridge elements.
- An MSEA must have adequate access to maintain and/or replace the bearings.
- All clearances between obstructions and the back of the MSE facing must meet current practice.

- As shown in Figures 5 and 7, the minimum distance between the back of the MSE facing elements and any element of the spread footing must be:

$$D_{min} = 8 - 0.3(20 - H_{max}) \geq 5ft$$

  Where, H_{max} is maximum height of the bridge soffit in feet from finished grade as shown in Figure 5.

- A minimum clear distance of 5.0 ft must be provided between the facing and all deep foundation components as shown in figures 6 and 7.

Amir M. Malek

Chief, Office of State Bridge Engineering (Acting)