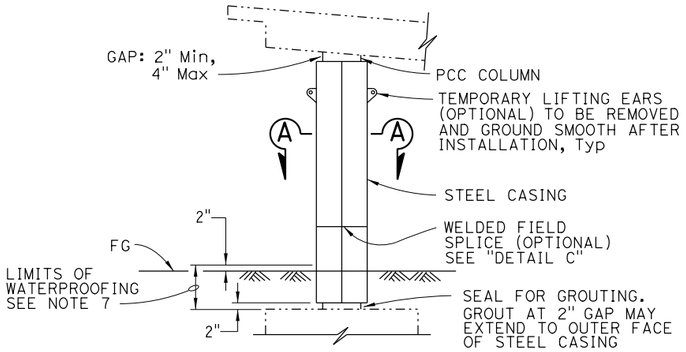


## TYPE F COLUMN

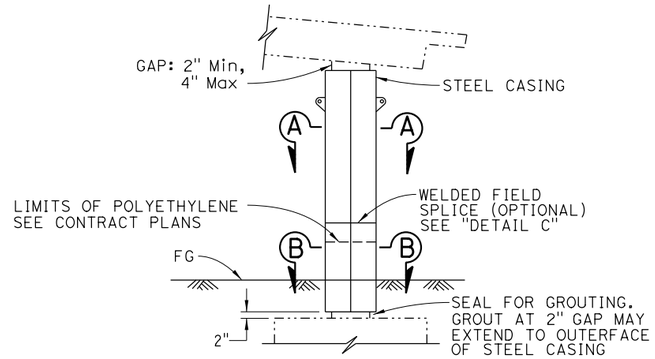


## TYPE P/F COLUMN

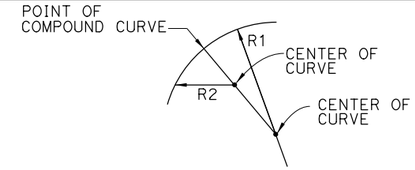


## ELLIPTICAL CASING DETAIL
## TYPE F AND P/F COLUMN

RADII R1 AND R2 TO BE DETERMINED BY THE CONTRACTOR SUBJECT TO THE APPROVAL OF THE ENGINEER

| DIST | COUNTY | ROUTE | POST MILES TOTAL PROJECT | SHEET No. | TOTAL SHEETS |
|---|---|---|---|---|---|
| | | | | | |

REGISTERED CIVIL ENGINEER DATE

PLANS APPROVAL DATE

REGISTERED PROFESSIONAL ENGINEER No. Exp. CIVIL STATE OF CALIFORNIA

*The State of California or its officers or agents shall not be responsible for the accuracy or completeness of scanned copies of this plan sheet.*

*The Registered Civil Engineer for the project is responsible for the selection and proper application of the component design and any modifications shown.*

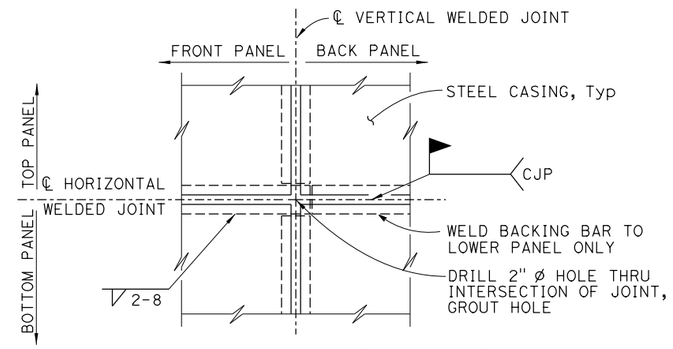


## WELD FIELD SPLICE (OPTIONAL)
## DETAIL C

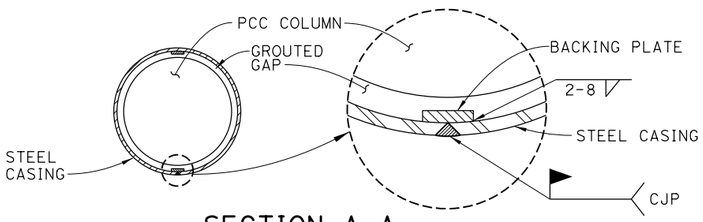


## SECTION A-A

MINIMUM INSIDE DIAMETER OF STEEL CASING = 1½" GREATER THAN NOMINAL COLUMN DIAMETER FOR TYPE F AND 2½" FOR TYPE P/F

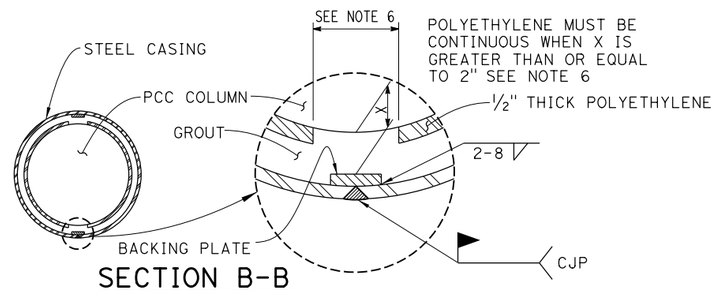


## SECTION B-B

MINIMUM INSIDE DIAMETER OF STEEL CASING = 2½" GREATER THAN NOMINAL COLUMN DIAMETER FOR TYPE P/F

## ROUND COLUMN

**LEGEND:**

-·-·-·- Indicates Existing structure

——— Indicates new structure

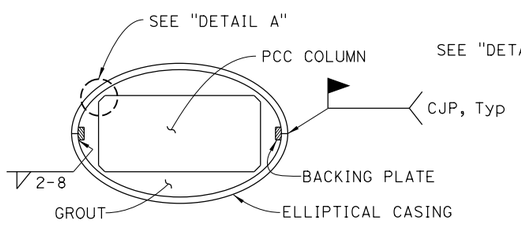


## SECTION A-A

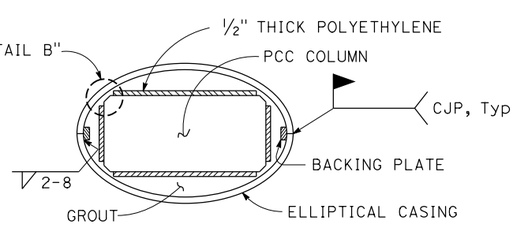


## SECTION B-B

## RECTANGULAR COLUMN

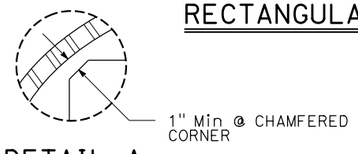


## DETAIL A

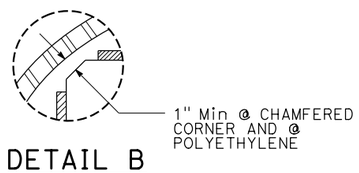


## DETAIL B

NOTE:
THE CONTRACTOR SHALL VERIFY ALL CONTROLLING FIELD DIMENSIONS BEFORE ORDERING OR FABRICATING ANY MATERIAL.

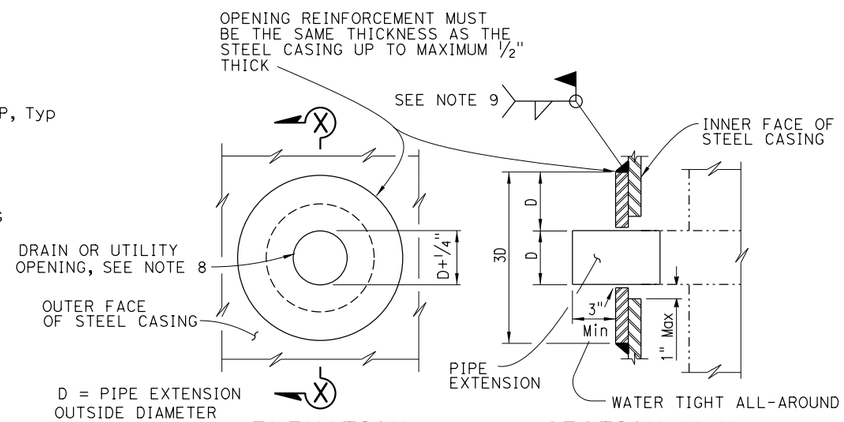


## ELEVATION

## SECTION X-X

## CASING OPENING

NOTE: OPENING REINFORCEMENT REQUIRED FOR DRAIN OR UTILITY OPENINGS LARGER THAN 4"

NO SCALE

**NOTES:**

1. For varying thickness, steel casing inside surface to remain flush. Minimum clearance from PCC column to casing shall be maintained.
2. Appropriate injection nozzles to be provided on casing, but removed and ground flush following completion of grouting operation.
3. All voids between steel casing and polyethylene (TYPE P/F), and steel casing and PCC column (TYPE F) to be filled with grout.
4. Location and number of vertical and horizontal welds to be determined by the Contractor and subject to the approval of the Engineer. The location of casing welds are for illustration. No skip welds allowed.
5. Circular steel casing to be ¼" thick minimum for casings with a 4'-4" diameter or less; all other steel casings to be ⅜" thick unless noted differently on contract plans. Backing plates to be the same thickness as casing up to maximum ⅜" thick.
6. Contractor must remove 12" polyethylene strip behind backing plate if backing plate is closer than 2" from face of column.
7. Waterproof limits for steel casings. Typical for TYPE "F" and TYPE "P/F".
8. For pipe extensions, opening must be no more than ¼" greater than the pipe extension diameter. For other openings, the opening diameter to be determined by the Engineer.
9. Minimum size of fillet weld must not be less than thickness of opening reinforcement.

BRIDGE STANDARD DETAILS

| xs7-010 | October 2015 | The components of the Bridge Standard Details have been prepared under the responsible charge of the Technical Owner, a registered civil engineer in the State of California |
|---|---|---|
| FILE NO. | APPROVAL DATE | |

STATE OF CALIFORNIA DEPARTMENT OF TRANSPORTATION

DIVISION OF ENGINEERING SERVICES

BRIDGE NO.

POST MILE

# COLUMN CASING - STEEL

Refer to: http://www.dot.ca.gov/hq/esc/techpubs/manual/bridgemanuals/bridge-standard-detail-sheets/index.html

FILE => xs7-010.dgn
USERNAME => s136236 TIME PLOTTED => 07:27 DATE PLOTTED => 12-JUL-2016

ORIGINAL SCALE IN INCHES FOR REDUCED PLANS 0 1 2 3

UNIT:
PROJECT NUMBER & PHASE: CONTRACT NO.:

DISREGARD PRINTS BEARING EARLIER REVISION DATES

REVISION DATES 7-8-16 11-14-14 1-14-15 8-31-15 SHEET OF