CHAPTER 5

SPACE FRAME

CONTENTS

Section		Page
5.1	Introduction	5-2
5.2	Usage	5-4
5.3	Joint Numbering for Efficiency	5-4
5.4	Pedestrian Overcrossing Problem	5-7
5.5	Summit Road Separation	5-28
5.6	Structure on Elastic Supports	5-47
5.7	Example Space Frame Problem	5-56

5.1 Introduction

The material presented in Chapters 1 and 2 of this manual are a necessary prerequisite for a reasonable understanding of the material presented in this chapter.

For the three dimensional structure STRUDL offers the space frame analysis capability. This frame analysis capability has no restrictions on location of joints, direction of members, or direction of loads. Each joint has six possible displacement components as shown in the sketch below.

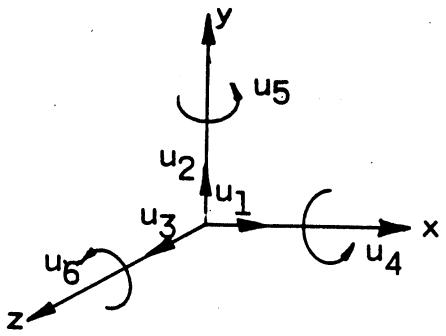

Fig. 5.1a

Joints completely unrestrained may translate and rotate about the X, Y and Z axes.

The individual member deformations considered in the space frame analysis are axial, torsional, and flexural. In addition to these the user has the option to have shear deformations included in the analysis. This option should be used when members have appreciable depth relative to their length. This is done by specifying the effective shear area, which is the cross sectional area multiplied by a shape factor. The shape factors for several sections are given in Appendix D. For the space frame analysis the effective shear areas are AZ and AY, either or both of these may be specified.

Unless otherwise specified, STRUDL assumes that the members of the space frame are rigidly connected at the joints. The individual members of a space frame may respond to external loadings by internal resisting axial forces, torsional couples and bending couples about the local axes of the members. Each member must satisfy the following conditions of basic Strength of Materials or Engineering Beam Theory:

1. The line joining the ends of a member (i.e., the local X-axis of the member), should contain the centroids of all cross sections of the member (the centroidal axis).

2. The shear center of each cross-section should coincide with the centroid, so that bending and twisting are uncoupled and can occur independent of one another. (Ref. 5.1)

3. The principal axes of inertia of each cross section are the local Y and Z axes.

4. STRUDL considers only members of constant cross section or members made up of segments, each segment with a constant cross section.

Most variable depth members can be modeled with sufficient accuracy by taking enough segments of constant cross-section. Curved members and arches may be approximated by a polygonal made up of a series of members. Since STRUDL considers only uniform torsion, the results would provide a good approximation for rectangular or box sections, but might not be applicable to rolled wide flange sections or cases where the effect of restrained warping may be important.

5.2 Usage

Analysis of a three dimensional structure using STRUDL can be an expensive undertaking particularly for the larger structures (structures having approx. 50 joints, with 300 degrees of freedom, or more). Before analyzing a structure as a space frame, the user should consider the possibility of modeling, i.e., idealizing the actual physical structure as a two dimensional structure or a combination of two dimensional structures. There are, however, some limitations on the analysis of two dimensional structures, in which case a space frame analysis will be necessary. For the plane frame, one of the principal axes of inertia for each member and the centroidal axes for all the members must be in a single plane. Frame structures with members that do not have their principal axes of inertia or centroidal axes in a common plane or have loads that cause deformations or rotations out of such a plane will require a space frame analysis. In the case of plane grid structures, the centroidal axis and one of the principal axes of inertia for each member must be in the plane of the grid. Forces must be applied perpendicular to the plane of the grid, and couples must have their moment vectors in the plane of the grid. Grid structures which do not satisfy these conditions should be analyzed as space frames.

5.3 Joint Numbering for Efficiency

The user can improve the efficiency of a STIFFNESS ANALYSIS by giving consideration to the joint numbering. The joints should be numbered in such a way that the maximum difference between the ends are kept to a minimum. This will minimize the band width of the structural stiffness matrix and consequently reduce computer time and required storage.

Briefly, the structural stiffness matrix is obtained by the systematic addition of the individual member stiffness matrices of the system. The stiffness matrix of the idealized structure, (i.e., the structural model) relates the joint forces to the unknown joint displacements by the following equation:

$$\{R\} = [K]\{r\}$$

In which $\{R\}$ is the column matrix of joint forces $[K]$ is a square stiffness matrix, the element of which are the elastic properties of the materials and the coordinate of the joint, and $\{r\}$ is the column matrix of joint displacements. This equation represents the equilibrium equation of the whole structure, each row of which is an equilibrium equation at a joint. The solution of the problem necessitates the determination of the unknown joint displacements $\{r\}$ in the above equation.

To illustrate efficient joint numbering consider the two following simple cases:

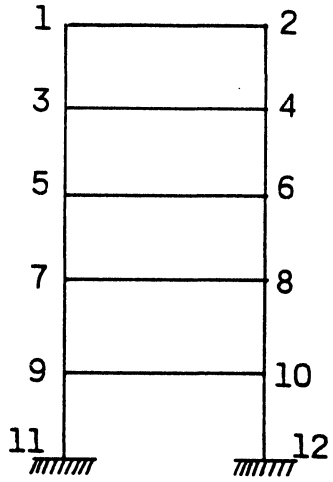

CASE i

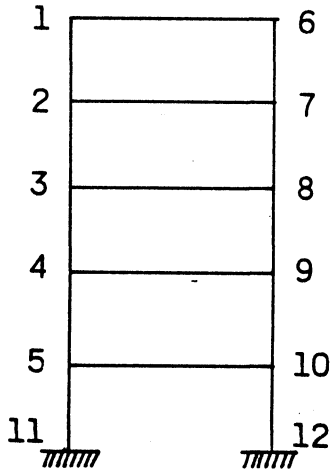

CASE ii

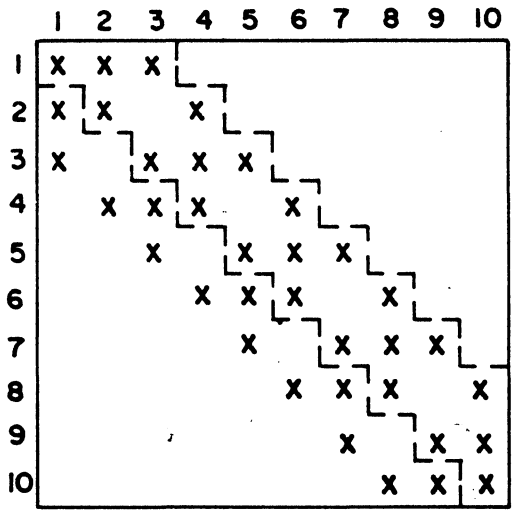

[K] CASE i

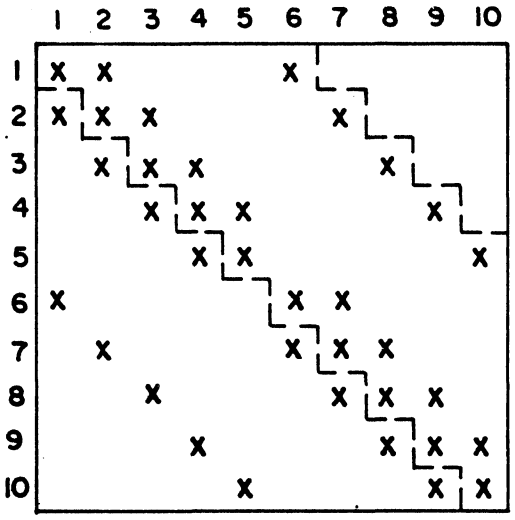

[K] CASE ii

Fig 5.3a

Note that the stiffness matrix is symmetric about the main diagonal. The elements on the diagonal and above diagonal denoted by the hash marks are stored and utilized in the solution of the joint displacements. Each term of the matrix is submatrix representing the degrees of freedom at a joint. (i.e., a 2 x 2 submatrix for a plane frame, a 3 x 3 submatrix for a plane frame or grid and a space truss and a 6 x 6 submatrix for a space frame).

The band width for a case i) is 3 times the number of degrees of freedom and for case ii) the band width is 6 times the number of degrees of freedom. Thus, for a plane frame structure the band width for case i) is 9, which is much more efficient than the band width of 18 for case ii).

The STRUDL user can control the actual internal joint numbering in one of two ways. First, in the unrestricted mode, which is assumed, the internal joints numbers are assigned sequently in the order that they are entered. Secondly, the user can explicitly specify that the internal joint numbers are to be the same as the external joint numbers by the SET ELEMENTS INTERGER command.

The user can obtain the internal joint numbering for case i) using the external joint numbering for case ii) simply by describing the joint coordinates as follows:

STATE OF CALIFORNIA - BUSINESS AND TRANSPORTATION AGENCY - DEPARTMENT OF PUBLIC WORKS - DIVISION OF ADMINISTRATIVE SERVICES

COMPUTER SYSTEMS

ICES

SUBSYSTEM NAME	SOURCE DIST.	SOURCE UNIT	CHARGE DIST.	CHARGE UNIT	EXPENDITURE AUTHORIZATION	SPECIAL DESIGNATION WHEN APPLICABLE	SEQUENCE
							ØØØ1
JOINT COORDINATES							100
1 50. 0.							110
6 50. 20.							120
2 40. 0.							130
7 40. 20.							140
3 30. 0.							150
8 30. 20.							160
4 20. 0.							170
9 20. 20.							180
5 10. 0.							190
10 10. 20.							200
11 0. 0. SUPPORT							210
12 0. 20. SUPPORT							220

5.4 Pedestrian Overcrossing Problem

To illustrate the use of STRUDL commands in the analysis of a space frame structure, consider the simplified 'Pedestrian Overcrossing' in Figures 5.4a and 5.4b.

The concepts to be explained in this problem are:

1. The special case BETA, where the local X axis is parallel to the global Y axis.

2. The commands used to apply wind loads in the global coordinate system.

3. The commands used to apply uniform moments to members.

4. The member properties that are required for a space frame stiffness analysis.

The commands shown below, describing the structure as modeled in Figure 5.4b, are entered in the same manner as previously described in this manual. Note, however, the new command TYPE SPACE FRAME which informs STRUDL that the structure to be analyzed is a space frame. Next, the units intended for the coordinates are specified by the UNITS FEET command. Following this, the description of the joint coordinates are given in the JOINT COORDINATES command, followed by a list of joints with their respective global coordinates.

The joint coordinates selected for this problem were simplified to illustrate the use of STRUDL for a space frame analysis and were not intended to be an accurate model of the curved structure. Another more accurate model could be produced by simply using more members or by specifying the matrix for a curved member.

The user should be cautioned at this point that in modeling curved sections it is advantageous to orient the members of the polygon in a tangential direction at points of specific interest to enable direct use of the member end forces. If the member segments are not oriented in a tangential direction, the user can resolve the member end forces into a tangential direction. Torsional forces in areas of high bending moments can be significantly effected even for small angles.

The commands shown below: (1) initiate PROB. 5.4 and (2) describe the position in space that the joints, selected by the designer, occupy.

SPACE FRAME

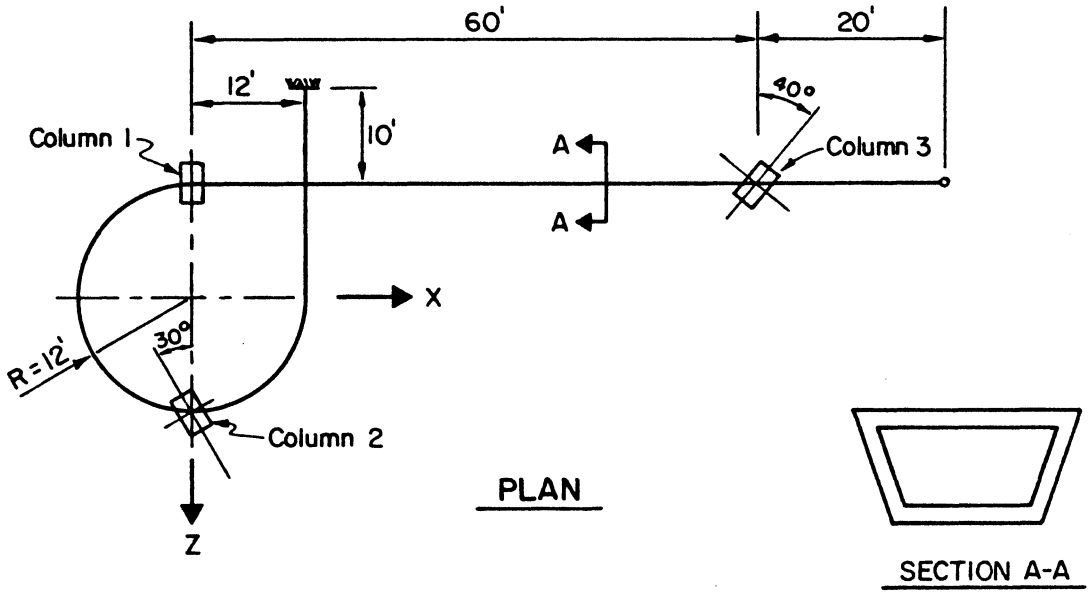

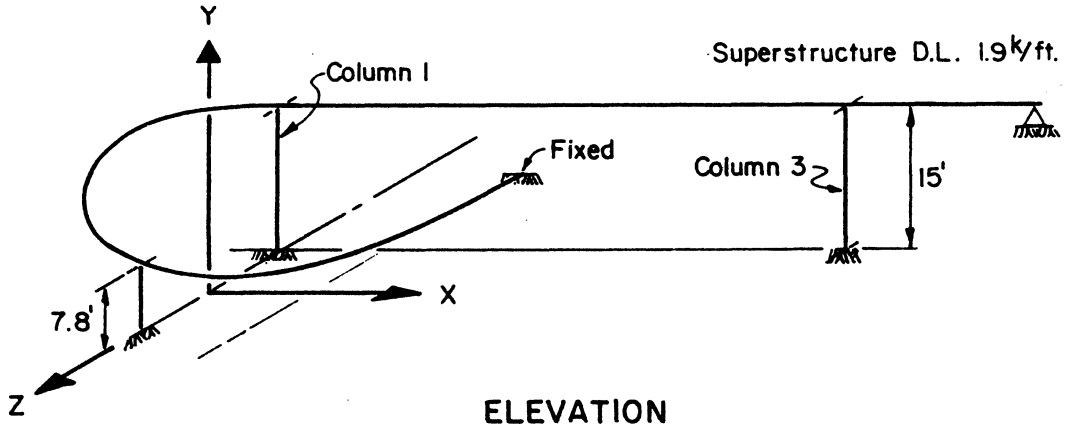

Fig. 5.4a

SPACE FRAME

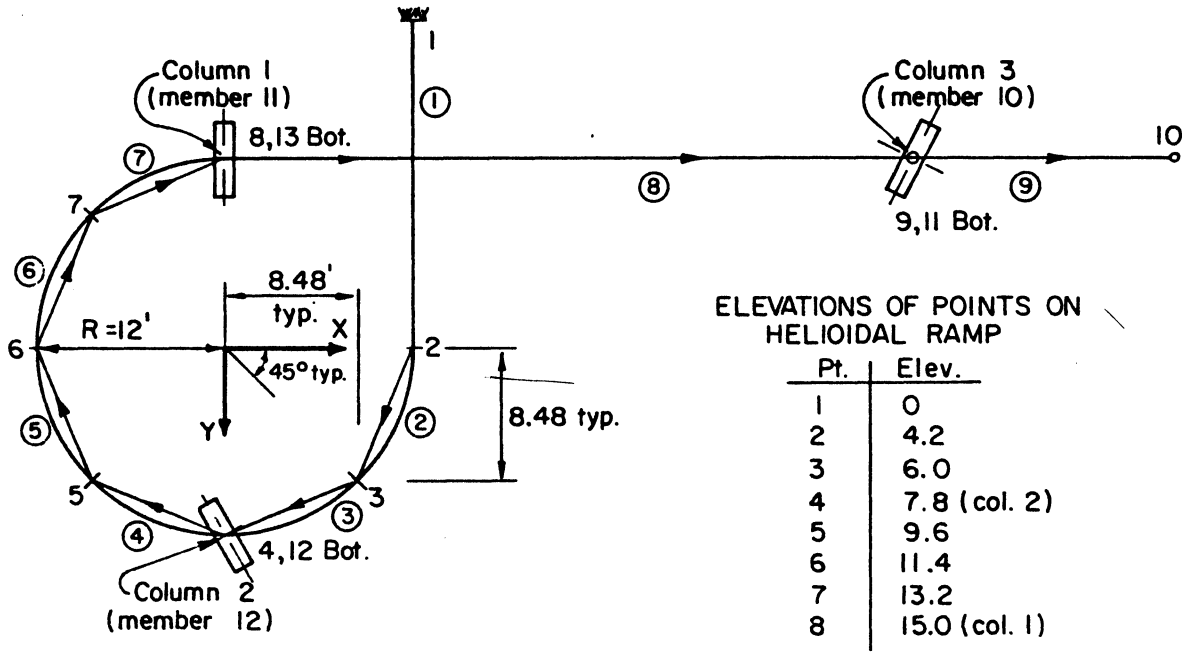

ELEVATIONS OF POINTS ON HELIOIDAL RAMP

Pt.	Elev.
1	0
2	4.2
3	6.0
4	7.8 (col. 2)
5	9.6
6	11.4
7	13.2
8	15.0 (col. 1)

Encircled numbers denote member numbers.

PLAN OF MODELED STRUCTURE

Fig. 5.4 b

STATE OF CALIFORNIA - BUSINESS AND TRANSPORTATION AGENCY - DEPARTMENT OF PUBLIC WORKS - DIVISION OF ADMINISTRATIVE SERVICES

COMPUTER SYSTEMS

ICES

b	b	ADDRESS DIST.	GROUP	BATCH
$		14T		15

SUBSYSTEM NAME	b	b	SOURCE DIST.	UNIT	CHARGE DIST.	UNIT	EXPENDITURE AUTHORIZATION	SPECIAL DESIGNATION WHEN APPLICABLE	b	SEQUENCE
	$									ØØØ1

```
STRUDL 'PRÖB 5.4' 'PEDESTRIAN ÖVERCRÖSSING'                                  10
TYPE SPACE FRAME                                                             20
UNITS FEET                                                                   30
JÖINT CÖÖRDINATES                                                            40
    1  12.        0.        -22.  SUPPÖRT                                    50
    2  12.        4.2                                                        60
    3   8.48      6.0        8.48                                            70
    4   0.        7.8        12.                                             80
    5  -8.48      9.6        8.48                                            90
    6 -12.       11.4                                                       100
    7  -8.48     13.2       -8.48                                           110
    8   0.       15.        -12.                                            120
    9  60.       15.        -12.                                            130
   10  80.       15.        -12.  SUPPÖRT                                   140
   11  60.        0.        -12.  SUPPÖRT                                   150
   12   0.        0.         12.  SUPPÖRT                                   160
   13   0.        0.        -12.  SUPPÖRT                                   170
```

The following commands refer to the connectivity of the members. The standard form of the MEMBER INCIDENCES command is used to show which members frame into each joint.

Next, the fixity of the support joints are given by the command: JOINT 10 RELEASE MOMENT XYZ. This command will release the moments in the global X, Y, and Z directions. A physical representation of this joint would be a ball and socket type joint.

```
MEMBER INCIDENCES                                                            180
   1   1   2                                                                 190
   2   2   3                                                                 200
   3   3   4                                                                 210
   4   4   5                                                                 220
   5   5   6                                                                 230
   6   6   7                                                                 240
   7   7   8                                                                 250
   8   8   9                                                                 260
   9   9  10                                                                 270
  10  11   9                                                                 280
  11  13   8                                                                 290
  12  12   4                                                                 300
JÖINT 10 RELEASE MÖMENT X Y Z                                                310
```

The next two sets of commands describe the member properties and give the constants to be considered in the STRUDL analysis. Calculations for the member properties are shown on the following pages. The first command, UNITS INCHES KIPS DEGREES, resets the units for ease of entering member properties. The next commands given describe the properties of the members that make up the space frame. For a STRUDL STIFFNESS ANALYSIS of a space frame the minimum required member properties are the following:

1. AX (Cross-sectional area)

2. IX (Torsional Rigidity) (See Appendix D)

3. IY (Moment of inertia about local Y axes)

4. IZ (Moment of inertia about local Z axes)

In order to ask for section stresses later in the program the section modulus is also given at this time.

```
UNITS FEET KIPS DEGREES                                                    320
MEMBER PROPERTIES PRISMATIC                                                330
    1 THRU 9 AX 12.72 IX 69.6 IZ 28.6 IY 120.8 SZ 5.7 SY 54.2              340
    10 THRU 12 AX 6. IX 4.7 IY 2. IZ 4.5 SZ 3.0 SY 2.0                     350
```

The next block of STRUDL commands gives the program the constants to be considered in the analysis. Since the units have been set to feet, kips and degrees in a previous command the constants must be given in the same units unless a change of units is first respecified. The rules outlined in Chapter 1 will be used to determine the BETA angles. For Member 10 the positive local X axis is in the positive global Y direction (see Figure 5.4c). Therefore, the reference Z' axis is placed in the global Z direction. This establishes the reference Y' axis in the negative global X direction. Then rotating in a positive sense about the local X axis to the local Y axis we find the BETA angle to be 230°. The BETA angles for the other columns are found in a similar manner and entered in the BETA 230. 10 270. 11 300. 12 command.

```
CONSTANTS                                                                  360
    E 432000. ALL                                                          370
    G 172800. ALL                                                          380
    BETA 230. 10 270. 11 300. 12                                           390
```

COLUMN MEMBER PROPERTIES

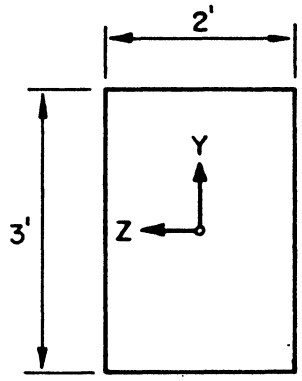

$A = 2' \times 3' = 6$ sq.ft.

$IZ = 1/12 \times 2 \times 3^3 = 4.5$ ft.^{4}

$IY = 1/12 \times 3 \times 2^3 = 2$ ft.^{4}

$IX = R = B\,bd^3$ (REF 5.2)

$b/d = 3/2 = 1.5 \quad \therefore B = 0.196$

X axis comes out $I_x = R = 0.196 \times 3 \times 2^3 = 4.704$ ft^4

$SZ = 4.5/1.5 = 3.0$ ft.^{3} $\quad S_y = 2/1 = 2$

SUPERSTRUCTURE MEMBER PROPERTIES

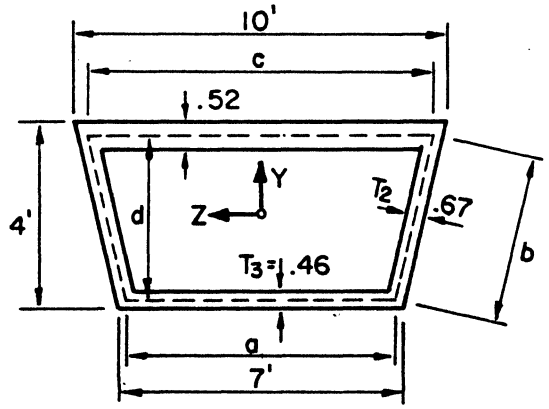

$AX = 12.71$ ft^2

$IY = 120.63$ ft.^{4}

$IZ = 28.56$ ft^4

$IX = 69.6$ ft.^{4}

$SY \approx 120.8/2.23 = 54.2$ ft^3

$SZ \approx 28.6/5 = 5.72$

Using REF 5.2 to find I_x :

$$R = \frac{(a+c)^2\,d^2}{\frac{a}{t_3}+\frac{2b}{T_2}+\frac{c}{t_1}} = \frac{(6.5+9.10)^2(3.50)^2}{\frac{6.5}{.46}+\frac{2(3.75)}{.67}+\frac{9.1}{.52}} = 69.61 \text{ ft}^4$$

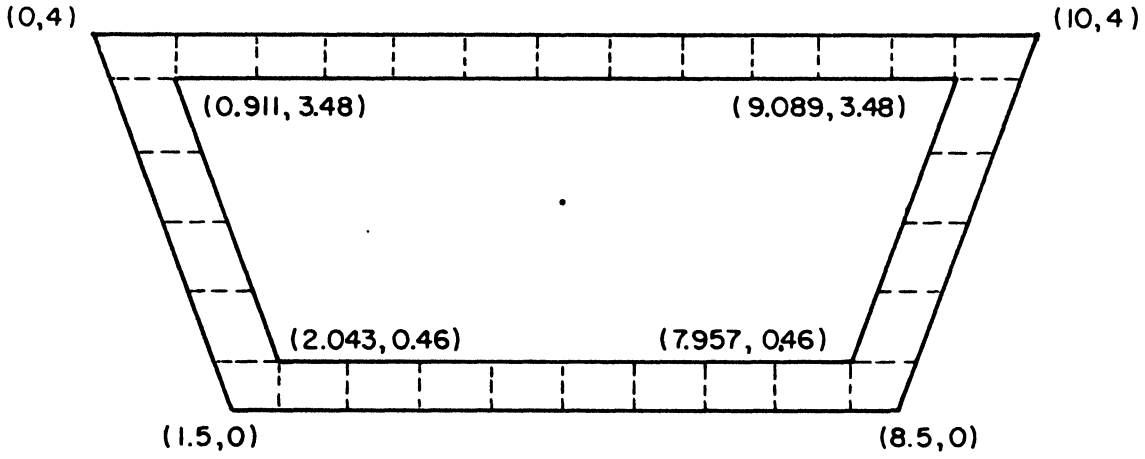

FINITE ELEMENT MESH TO DETERMINE SECTION PROPERTIES

REF. 5.3

A computer program is available for calculation of section properties

LOADINGS

DL = 12.72 x 0.15 = 1.908 $^{K}/_{FT}$ = 1908 $^{LB}/_{FT}$

LL = Assume 60 $^{LB}/_{SQ.FT.}$ = 60 x 10 = 600 $^{LB}/_{FT}$

DL + LL = 2508 $^{LB}/_{FT}$ Say 2510

GROUP II TRANSVERSE WIND

50 $^{LB}/_{SQ.FT.}$ x 4' = 200 $^{LB}/_{FT.}$

GROUP II LONGITUDINAL WIND

12 $^{LB}/_{SQ.FT.}$ x 4' = 48 $^{LB}/_{FT.}$

OVERTURNING

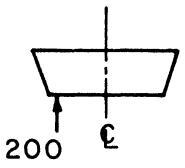

20 $^{LB}/_{SQ.FT.}$ x 10' wide = 200 $^{LB}/_{FT.}$ M = 200 x 2.5' = 500 $^{FT-LB}/_{FT}$

The next set of commands are used to describe the loading conditions that will be applied to the structure. The loadings described below are shown in Figure 5.4d. The first command UNITS FEET LBS redefines the units to be used. Following this command, loading 1 is given to describe the effects of dead and live loads. Since the global X-Z plane represents the ground surface, it would be useful to apply wind loads parallel to this surface. This is accomplished by giving the wind loads in either or both of these global directions. Also, since some members of the space frame are inclined, it would be convenient to apply the wind loads onto the members in the global Z direction. This is accomplished by using the command MEMBER 1 TO 9 LOADS FORCE Z GLOBAL PROJECTED UNIFORM W 200. Note that the individual member load intensities have been specified as a function of the member lengths projected on a plane normal to the wind direction. Members that are not perpendicular to the loading direction will have their load intensities resolved automatically by the program. This same technique is used for applying wind forces in loading 3. LOADING 4 'OVERTURNING' shown in Figure 5.4d introduces the concept of applying a uniform torque to members of the structure. Notice that the loads have been given in the member local axis directions. This causes the sign of the uniform moment to change depending upon the direction of the local X axes.

Loading 5 is a combination loading command that is used before a stiffness analysis. This command combines the loadings in the proportions determined by the designer and uses the combined loads in the analysis of the structure. Note carefully the form of this command and the difference between it and the COMBINE command. The COMBINE command is used only after a STIFFNESS ANALYSIS has been performed. The COMBINE command combines the <u>results</u> from various loading conditions.

The LOAD LIST ALL command is given next to tell the program what loadings are to be considered in the forthcoming analysis. In STRUDL II the command is not needed if all loads are to be considered in the stiffness analysis. The LOAD LIST command is useful then, to consider only certain loading conditions, if that is the designers choice.

```
UNITS FEET LBS                                                          410
LOADING 1 'DEADLOAD PLUS LIVELOAD'                                      420
    MEMBER 1 THRU 9 LOADS FORCE Y GLOBAL UNIFORM W -251.0               430
LOADING 2 'WIND GROUP II TRANSVERSE'                                    440
MEMBER 1 TO 9 LOADS FORCE Z GLOBAL PROJECTED UNIFORM W 200.             460
LOADING 3 'WIND GROUP II LONGITUDINAL'                                  500
MEMBER 2 TO 7 LOADS FORCE X GLOBAL PROJECTED UNIFORM W 48.              510
LOADING 4 'OVERTURNING'                                                 520
MEMBER 2 TO 9 LOADS FORCE Y GLOBAL UNIFORM W 200.                       570
    MEMBER LOADS MOMENT X                                               580
2 TO 5 UNIFORM W -500                                                   590
6 TO 9 UNIFORM W +500                                                   600
LOADING COMBINATION 5 COMBINE 1 1. 2 1. 3 1. 4 1.                       610
LOAD LIST ALL                                                           620
```

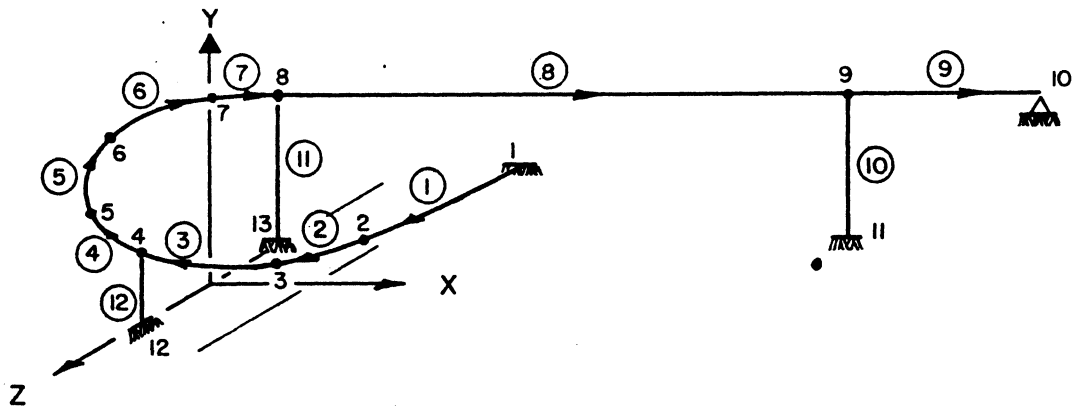

ELEVATION OF MODELED STRUCTURE

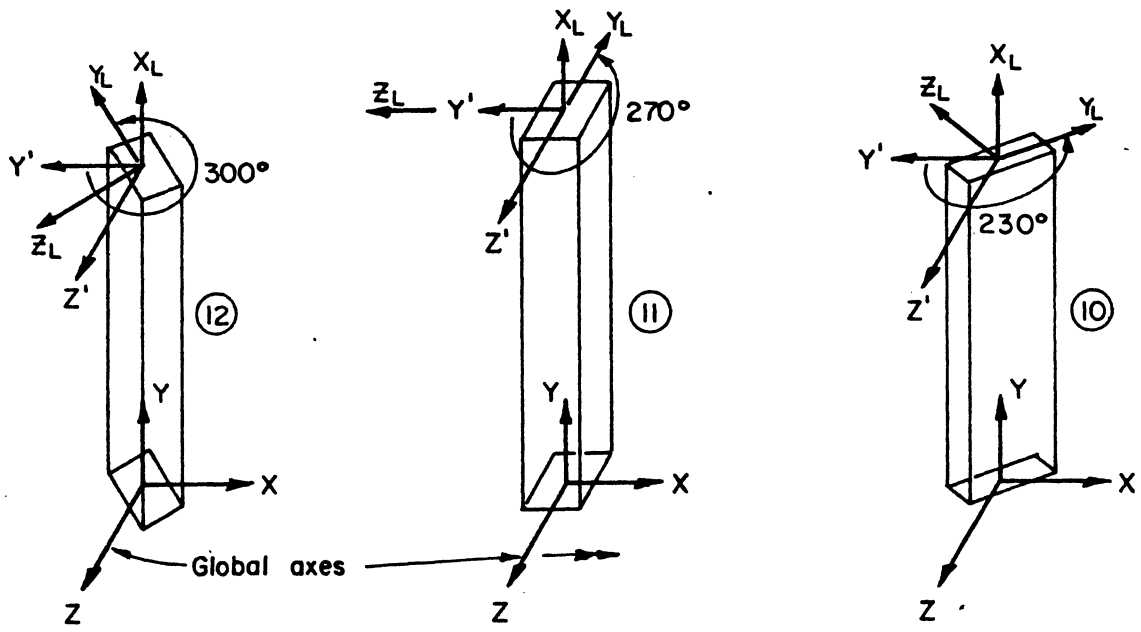

COLUMN BETA ANGLES

Fig. 5.4c

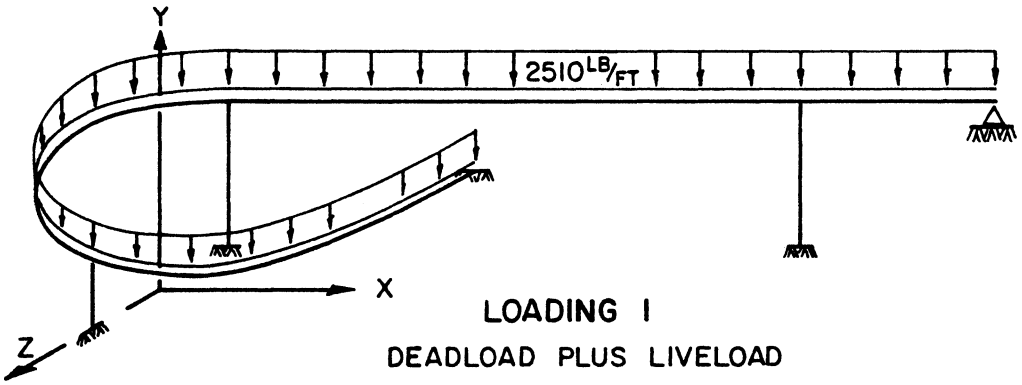

LOADING 1

DEADLOAD PLUS LIVELOAD

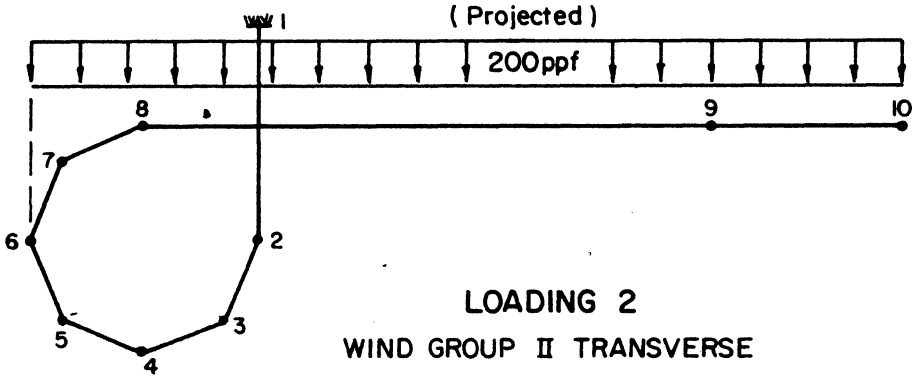

LOADING 2

WIND GROUP II TRANSVERSE

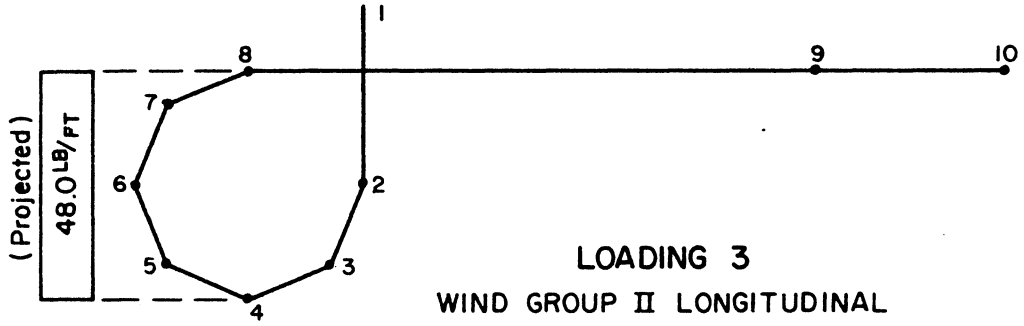

LOADING 3

WIND GROUP II LONGITUDINAL

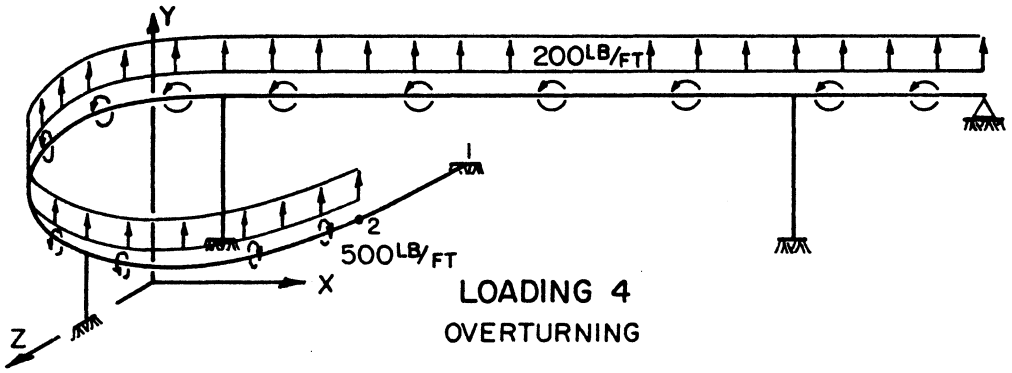

LOADING 4

OVERTURNING

Fig 5.4d

The next set of commands will be used to verify all data submitted, and then instruct STRUDL to perform the analysis and obtain results. The command PRINT DATA will result in a full print out of structural data and loading conditions. The commands following this are then used to obtain results for the various loading conditions. These commands have been discussed in prior chapters.

To obtain the section stress at the 1/10 points for member 8, the following command may be given:

```
SECTION FRACTION DS 0.0 0.1

LIST SECTION STRESS MEMBER 8
```

This command instructs the computer to compute the section stresses for the various loading conditions.

```
PRINT DATA                                                    630
STIFFNESS ANALYSIS                                            640
OUTPUT DECIMAL 5                                              650
UNITS KIPS INCHES                                             660
LIST FORCES REACTIONS DISPLACEMENTS                           670
SECTION FRACTION DS 0.0 0.1                                   680
LIST SECTION STRESS MEMBER 8                                  690
```

The following output was obtained from the series of commands just described. Results should always be checked to see if they are reasonable and only used after the designer is sure his commands have been interpreted properly within the STRUDL program.

```
STRUDL 'PROB 5.4' 'PEDESTRIAN OVERCROSSING'                    $ 14T 15    0010

          ************************************************
          *                                              *
          *     ICES STRUDL II      VERSION 1 MOD 1      *
          *       THE STRUCTURAL DESIGN LANGUAGE         *
          *    MASSACHUSETTS INSTITUTE OF TECHNOLOGY     *
          *              STATE OF CALIFORNIA             *
          *     BRIDGE DEPARTMENT DIVISION OF HWYS.      *
          *    SPECIAL STUDIES SECTION  PH. 445-6519     *
          *     NOVEMBER 1969  INSTALLED APRIL 1970      *
          *           23:46:19      12/10/70             *
          *                                              *
          ************************************************

TYPE SPACE FRAME                                               $ 14T 15    0020

UNITS FEET                                                     $ 14T 15    0030

JOINT COORDINATES                                              $ 14T 15    0040

     1  12.        0.          -22. SUPPORT                    $ 14T 15    0050

     2  12.        4.2           0.                            $ 14T 15    0060

     3   8.48      6.0           8.48                          $ 14T 15    0070

     4   0         7.8          12.                            $ 14T 15    0080

     5  -8.48      9.6           8.48                          $ 14T 15    0090

     6 -12        11.4                                         $ 14T 15    0100

     7  -8.48     13.2          -8.48                          $ 14T 15    0110

     8   0.       15.          -12.                            $ 14T 15    0120

     9  60.       15.          -12.                            $ 14T 15    0130

    10  80.       15.          -12. SUPPORT                    $ 14T 15    0140

    11  60.        0           -12. SUPPORT                    $ 14T 15    0150

    12   0.        0           -12. SUPPORT                    $ 14T 15    0160

    13   0.        0           -12. SUPPORT                    $ 14T 15    0170

MEMBER INCIDENCES                                              $ 14T 15    0180

     1    1    2                                               $ 14T 15    0190

     2    2    3                                               $ 14T 15    0200

     3    3    4                                               $ 14T 15    0210

     4    4    5                                               $ 14T 15    0220

     5    5    6                                               $ 14T 15    0230

     6    6    7                                               $ 14T 15    0240

     7    7    8                                               $ 14T 15    0250

     8    8    9                                               $ 14T 15    0260

     9    9   10                                               $ 14T 15    0270

    10   11    9                                               $ 14T 15    0280

    11   13    8                                               $ 14T 15    0290

    12   12    4                                               $ 14T 15    0300
```

```
JOINT 10 RELEASE MOMENT X Y Z                                   $ 14T 15    0310
UNITS FEET KIPS DEGREES                                         $ 14T 15    0320
MEMBER PROPERTIES PRISMATIC                                     $ 14T 15    0330
     1 THRU 9 AX 12.72 IX 69.6 IZ 28.6 IY 120.8 SZ 5.7 SY 54.2  $ 14T 15    0340
     10 THRU 12 AX 6. IX 4.7 IY 2. IZ 4.5 SZ 3. SY 2.           $ 14T 15    0350
CONSTANTS                                                       $ 14T 15    0360
     E 432000. ALL                                              $ 14T 15    0370
     G 172800. ALL                                              $ 14T 15    0380
     BETA 230. 10 270. 11 300. 12                               $ 14T 15    0390
UNITS FEET LBS                                                  $ 14T 15    0400
LOADING 1 'DEADLOAD PLUS LIVELOAD'                              $ 14T 15    0410
     MEMBERS 1 THRU 9 LOADS FORCE Y GLOBAL UNIFORM W -2510      $ 14T 15    0420
LOADING 2 'WIND GROUP II TRANSVERSE'                            $ 14T 15    0430
MEMBER 1 TO 9 LOADS FORCE Z GLOBAL PROJECTED UNIFORM W 200      $ 14T 15    0440
LOADING 3 'WIND GROUP II LONGITUDINAL'                          $ 14T 15    0500
MEMBER 2 TO 7 LOADS FORCE X GLOBAL PROJECTED UNIFORM W 48       $ 14T 15    0510
LOADING 4 'OVERTURNING'                                         $ 14T 15    0560
MEMBER 2 TO 9 LOADS FORCE Y GLOBAL UNIFORM W 200                $ 14T 15    0570
     MEMBER LOADS MOMENT X                                      $ 14T 15    0580
2 TO 5 UNIFORM W -500                                           $ 14T 15    0590
6 TO 9 UNIFORM W 500                                            $ 14T 15    0600
LOADING COMBINATION 5 COMBINE 1 1. 2 1. 3 1. 4 1.               $ 14T 15    0610
LOAD LIST ALL                                                   $ 14T 15    0620
PRINT DATA                                                      $ 14T 15    0630
```

```
*****************************************
*  PROBLEM DATA FROM INTERNAL STORAGE  *
*****************************************
```

JOB ID - PROB 5.4 JOB TITLE - PEDESTRIAN OVERCROSSING

ACTIVE UNITS -	LENGTH	WEIGHT	ANGLE	TEMPERATURE	TIME
	FEET	LB	DEG	DEGF	SEC

********** STRUCTURAL DATA **********

ACTIVE STRUCTURE TYPE - SPACE FRAME

ACTIVE COORDINATE AXES X Y Z

JOINT COORDINATES----------/ STATUS---/

JOINT	X	Y	Z	CONDITION	
1	12.000	0.0	-22.000	SUPPORT	ACTIVE
2	12.000	4.200	0.0		ACTIVE
3	8.480	6.000	8.480		ACTIVE
4	0.0	7.800	12.000		ACTIVE
5	-8.480	9.600	8.480		ACTIVE
6	-12.000	11.400	0.0		ACTIVE
7	-8.480	13.200	-8.480		ACTIVE
8	0.0	15.000	-12.000		ACTIVE
9	60.000	15.000	-12.000		ACTIVE
10	80.000	15.000	-12.000	SUPPORT	ACTIVE
11	60.000	0.0	-12.000	SUPPORT	ACTIVE
12	0.0	0.0	-12.000	SUPPORT	ACTIVE
13	0.0	0.0	-12.000	SUPPORT	ACTIVE

JOINT RELEASES----------/ELASTIC SUPPORT RELEASES----------/

JOINT	FORCE	MOMENT	THETA 1	THETA 2	THETA 3	KFX	KFY	KFZ	KMX	KMY	KMZ
10		X Y Z	0.0	0.0	0.0	0.0	0.0	0.0	0.0	0.0	0.0

MEMBER INCIDENCES----------/ LENGTH------/ RELEASES----------/ STATUS--/

MEMBER	START	END	LOCAL COORD.	START FORCE	START MOMENT	END FORCE	END MOMENT	
1	1	2	22.397					ACTIVE
2	2	3	9.356					ACTIVE
3	3	4	9.356					ACTIVE
4	4	5	9.356					ACTIVE
5	5	6	9.356					ACTIVE
6	6	7	9.356					ACTIVE
7	7	8	9.356					ACTIVE
8	8	9	60.000					ACTIVE
9	9	10	20.000					ACTIVE
10	11	9	15.000					ACTIVE
11	13	8	15.000					ACTIVE
12	12	4	25.236					ACTIVE

MEMBER PROPERTIES----------/

MEMBER/SEG	TYPE	SEG.L	COMP	AX/YD	AY/ZD	AZ/YC	IX/ZC	IY/EY	IZ/EZ	SY	SZ
1	PRISMATIC			12.720	0.0	0.0	69.600	120.800	28.600	54.200	5.700
				0.0	0.0	0.0	0.0	0.0	0.0		
2	PRISMATIC			12.720	0.0	0.0	69.600	120.800	28.600	54.200	5.700
				0.0	0.0	0.0	0.0	0.0	0.0		
3	PRISMATIC			12.720	0.0	0.0	69.600	120.800	28.600	54.200	5.700
				0.0	0.0	0.0	0.0	0.0	0.0		
4	PRISMATIC			12.720	0.0	0.0	69.600	120.800	28.600	54.200	5.700
				0.0	0.0	0.0	0.0	0.0	0.0		
5	PRISMATIC			12.720	0.0	0.0	69.600	120.800	28.600	54.200	5.700
				0.0	0.0	0.0	0.0	0.0	0.0		
6	PRISMATIC			12.720	0.0	0.0	69.600	120.800	28.600	54.200	5.700
				0.0	0.0	0.0	0.0	0.0	0.0		
7	PRISMATIC			12.720	0.0	0.0	69.600	120.800	28.600	54.200	5.700
				0.0	0.0	0.0	0.0	0.0	0.0		
8	PRISMATIC			12.720	0.0	0.0	69.600	120.800	28.600	54.200	5.700
				0.0	0.0	0.0	0.0	0.0	0.0		
9	PRISMATIC			12.720	0.0	0.0	69.600	120.800	28.600	54.200	5.700
				0.0	0.0	0.0	0.0	0.0	0.0		
10	PRISMATIC			6.000	0.0	0.0	4.700	2.000	4.500	2.000	3.000
				0.0	0.0	0.0	0.0	0.0	0.0		
11	PRISMATIC			6.000	0.0	0.0	4.700	2.000	4.500	2.000	3.000
				0.0	0.0	0.0	0.0	0.0	0.0		
12	PRISMATIC			6.000	0.0	0.0	4.700	2.000	4.500	2.000	3.000
				0.0	0.0	0.0	0.0	0.0	0.0		

MEMBER CONSTANTS----------/

CONSTANT	STANDARD VALUE	DOMAIN.	VALUE	MEMBER LIST
E	**********	ALL		
G	**********	ALL		
DENSITY	1728.000000	ALL		
CTE	1.000000	ALL		
BETA	0.0	ALL BUT		
			229.999939	10
			269.999756	11
			299.999756	12
POISSON	0.0	ALL		

********** DESIGN DATA **********

USER DATA SET

PARAMETER DICTIONARY----------/

NAME	TREATMENT	STANDARD	L	W	A	TEMP TIME

STRUDL DATA SET

PARAMETER DICTIONARY----------/

NAME	TREATMENT	STANDARD	L	W	A	TEMP TIME
FYLD	STANDARD	********	-2	1		
PF	STANDARD	1.00				
FBLTUP	STANDARD	1.00				
CODF	REQUIRED					
KY	STANDARD	1.00				
KZ	STANDARD	1.00				
CB	STANDARD	1.00				
LY	COMPUTE	QQSTULEN				
LZ	COMPUTE	QQSTULEN				
CMY	STANDARD	0.85				
CMZ	STANDARD	0.85				
UNLCF	COMPUTE	QQSTULEN				
VALUES	STANDARD	1.00				
TRACE	STANDARD	1.00				
PRIDTA	STANDARD	1.00				
TBLNAM	STANDARD	STEELWF				
MXTRIALS	STANDARD	25.00				
SECNDARY	STANDARD	1.00				

USER DATA SET

CONSTRAINT DICTIONARY----------/

NAME	RETRIEVAL

STRUDL DATA SET

CONSTRAINT DICTIONARY----------/

NAME	RETRIEVAL
AX	TABULAR
AY	TABULAR
AZ	TABULAR
IX	TABULAR
IY	TABULAR
IZ	TABULAR
SY	TABULAR
SZ	TABULAR
YD	TABULAR
ZD	TABULAR
FLTK	TABULAR
WBTK	TABULAR
YD/AFL	TABULAR
RY	TABULAR
RZ	TABULAR
COMP	TABULAR
YC	TABULAR
ZC	TABULAR
WEIGHT	TABULAR

********** LOADING DATA **********

LOADING - 1 DEADLOAD PLUS LIVELOAD STATUS - ACTIVE

MEMBER AND ELEMENT LOADS----------/

MEMBER/ELEMENT										
1	UNIFORM	LOAD GL FORCE	Y	FR	W	-2509.999	LA	0.0	LB	1.000
2	UNIFORM	LOAD GL FORCE	Y	FR	W	-2509.999	LA	0.0	LB	1.000
3	UNIFORM	LOAD GL FORCE	Y	FR	W	-2509.999	LA	0.0	LB	1.000
4	UNIFORM	LOAD GL FORCE	Y	FR	W	-2509.999	LA	0.0	LB	1.000
5	UNIFORM	LOAD GL FORCE	Y	FR	W	-2509.999	LA	0.0	LB	1.000
6	UNIFORM	LOAD GL FORCE	Y	FR	W	-2509.999	LA	0.0	LB	1.000
7	UNIFORM	LOAD GL FORCE	Y	FR	W	-2509.999	LA	0.0	LB	1.000
8	UNIFORM	LOAD GL FORCE	Y	FR	W	-2509.999	LA	0.0	LB	1.000
9	UNIFORM	LOAD GL FORCE	Y	FR	W	-2509.999	LA	0.0	LB	1.000

JOINT FORCE ASSUMPTIONS ----------/

JOINT	THETA	1	2	3	FORCE X	Y	Z	MOMENT X	Y	Z

NO ASSUMPTIONS GIVEN FOR THIS LOADING

MEMBER FORCE ASSUMPTIONS ----------/ ----------/

MEMBER	COMPONENT	DISTANCE	VALUE	COMPONENT	DISTANCE	VALUE

NO ASSUMPTIONS GIVEN FOR THIS LOADING

```
LOADING - 2            WIND GROUP II TRANSVERSE                                    STATUS - ACTIVE

MEMBER AND ELEMENT LOADS----------------------------------------------------------------------------------------/
MEMBER/ELEMENT
1          UNIFORM   LOAD GL FORCE  Z  FR   W   200.000   LA  0.0     LB   1.000
2          UNIFORM   LOAD GL FORCE  Z  FR   W   200.000   LA  0.0     LB   1.000
3          UNIFORM   LOAD GL FORCE  Z  FR   W   200.000   LA  0.0     LB   1.000
4          UNIFORM   LOAD GL FORCE  Z  FR   W   200.000   LA  0.0     LB   1.000
5          UNIFORM   LOAD GL FORCE  Z  FR   W   200.000   LA  0.0     LB   1.000
6          UNIFORM   LOAD GL FORCE  Z  FR   W   200.000   LA  0.0     LB   1.000
7          UNIFORM   LOAD GL FORCE  Z  FR   W   200.000   LA  0.0     LB   1.000
8          UNIFORM   LOAD GL FORCE  Z  FR   W   200.000   LA  0.0     LB   1.000
9          UNIFORM   LOAD GL FORCE  Z  FR   W   200.000   LA  0.0     LB   1.000

JOINT FORCE ASSUMPTIONS -----------------------------------------------------------------------------------------/

JOINT     THETA  1        2        3     FORCE X          Y          Z      MOMENT X          Y          Z
NO ASSUMPTIONS GIVEN FOR THIS LOADING


MEMBER FORCE ASSUMPTIONS ----------------------/    ----------------------------------/

MEMBER        COMPONENT   DISTANCE     VALUE          COMPONENT   DISTANCE     VALUE
NO ASSUMPTIONS GIVEN FOR THIS LOADING


LOADING - 3            WIND GROUP II LONGITUDINAL                                  STATUS - ACTIVE

MEMBER AND ELEMENT LOADS----------------------------------------------------------------------------------------/
MEMBER/ELEMENT
2          UNIFORM   LOAD GL FORCE  X  FR   W    48.000   LA  0.0     LB   1.000
3          UNIFORM   LOAD GL FORCE  X  FR   W    48.000   LA  0.0     LB   1.000
4          UNIFORM   LOAD GL FORCE  X  FR   W    48.000   LA  0.0     LB   1.000
5          UNIFORM   LOAD GL FORCE  X  FR   W    48.000   LA  0.0     LB   1.000
6          UNIFORM   LOAD GL FORCE  X  FR   W    48.000   LA  0.0     LB   1.000
7          UNIFORM   LOAD GL FORCE  X  FR   W    48.000   LA  0.0     LB   1.000

JOINT FORCE ASSUMPTIONS -----------------------------------------------------------------------------------------/

JOINT     THETA  1        2        3     FORCE X          Y          Z      MOMENT X          Y          Z
NO ASSUMPTIONS GIVEN FOR THIS LOADING


MEMBER FORCE ASSUMPTIONS ----------------------/    ----------------------------------/

MEMBER        COMPONENT   DISTANCE     VALUE          COMPONENT   DISTANCE     VALUE
NO ASSUMPTIONS GIVEN FOR THIS LOADING


LOADING - 4            OVERTURNING                                                 STATUS - ACTIVE

MEMBER AND ELEMENT LOADS----------------------------------------------------------------------------------------/
MEMBER/ELEMENT
2          UNIFORM   LOAD GL FORCE  Y  FR   W    200.000   LA  0.0     LB   1.000
           UNIFORM   LOAD    MOMENT X  FR   W -6000.000   LA  0.0     LB   1.000
3          UNIFORM   LOAD GL FORCE  Y  FR   W    200.000   LA  0.0     LB   1.000
           UNIFORM   LOAD    MOMENT X  FR   W -6000.000   LA  0.0     LB   1.000
4          UNIFORM   LOAD GL FORCE  Y  FR   W    200.000   LA  0.0     LB   1.000
           UNIFORM   LOAD    MOMENT X  FR   W -6000.000   LA  0.0     LB   1.000
5          UNIFORM   LOAD GL FORCE  Y  FR   W    200.000   LA  0.0     LB   1.000
           UNIFORM   LOAD    MOMENT X  FR   W -6000.000   LA  0.0     LB   1.000
6          UNIFORM   LOAD GL FORCE  Y  FR   W    200.000   LA  0.0     LB   1.000
           UNIFORM   LOAD    MOMENT X  FR   W  6000.000   LA  0.0     LB   1.000
7          UNIFORM   LOAD GL FORCE  Y  FR   W    200.000   LA  0.0     LB   1.000
           UNIFORM   LOAD    MOMENT X  FR   W  6000.000   LA  0.0     LB   1.000
8          UNIFORM   LOAD GL FORCE  Y  FR   W    200.000   LA  0.0     LB   1.000
           UNIFORM   LOAD    MOMENT X  FR   W  6000.000   LA  0.0     LB   1.000
9          UNIFORM   LOAD GL FORCE  Y  FR   W    200.000   LA  0.0     LB   1.000
           UNIFORM   LOAD    MOMENT X  FR   W  6000.000   LA  0.0     LB   1.000

JOINT FORCE ASSUMPTIONS -----------------------------------------------------------------------------------------/

JOINT     THETA  1        2        3     FORCE X          Y          Z      MOMENT X          Y          Z
NO ASSUMPTIONS GIVEN FOR THIS LOADING


MEMBER FORCE ASSUMPTIONS ----------------------/    ----------------------------------/

MEMBER        COMPONENT   DISTANCE     VALUE          COMPONENT   DISTANCE     VALUE
NO ASSUMPTIONS GIVEN FOR THIS LOADING


LOADING - 5                                                                       STATUS - ACTIVE

        COMBINATION GIVEN -   1        1.000      2        1.000      3        1.000
                              4        1.000


****************************************
*  END OF DATA FROM  INTERNAL STORAGE  *
****************************************
```

```
STIFFNESS ANALYSIS                                  $ 14T 15    0640
OUTPUT DECIMAL 5                                    $ 14T 15    0650
UNITS KIPS INCHES                                   $ 14T 15    0660
LIST FORCES REACTIONS DISPLACEMENTS                 $ 14T 15    0670
```

****
RESULTS OF LATEST ANALYSES
****

PROBLEM - PROB 5.4 TITLE - PEDESTRIAN OVERCROSSING

ACTIVE UNITS INCH KIP DEG DEGF SEC

ACTIVE STRUCTURE TYPE SPACE FRAME

ACTIVE COORDINATE AXES X Y Z

LOADING - 1 DEADLOAD PLUS LIVELOAD

MEMBER FORCES

MEMBER	JOINT	FORCE			MOMENT		
		AXIAL	SHEAR Y	SHEAR Z	TORSIONAL	BENDING Y	BENDING Z
1	1	-26.91113	90.44180	17.31166	-758.44067	-7602.46484	20469.33984
1	2	37.45312	-35.22185	-17.31166	758.44067	2949.65063	-3582.18066
2	2	-27.51169	33.49219	32.62506	589.02417	-3212.88672	3382.02661
2	3	32.02968	-10.44654	-32.62506	-589.02417	-450.12061	-915.39819
3	3	0.15158	4.13755	46.71490	1082.52686	353.37427	301.28906
3	4	4.36641	18.90810	-46.71490	-1082.52686	-5598.32812	-1130.47778
4	4	-4.79653	35.92625	-61.87567	92.96074	5437.63672	1472.27466
4	5	9.31452	-12.88060	61.87567	-92.96074	1509.50586	1267.63989
5	5	-48.85803	20.63292	-35.61523	-894.61938	-1315.89771	-1167.14868
5	6	53.37602	2.41272	35.61523	894.61938	5314.62891	2189.99268
6	6	-63.15085	-0.49641	11.61854	-2458.22778	-5008.08594	-1648.58667
6	7	67.66879	23.54207	-11.61854	2458.22778	3703.60864	299.11548
7	7	-41.89894	-28.59413	51.91478	-2178.68384	-3759.40869	988.30542
7	8	46.41695	51.63979	-51.91478	2178.68384	-2070.36768	-5492.46875
8	8	-4.94953	73.70105	-3.92168	2396.73682	1400.03784	6999.70312
8	9	4.94953	76.89874	3.92168	-2396.73682	1423.57471	-8150.83984
9	9	-16.21954	51.75859	6.82008	0.0	-1636.81982	6398.07031
9	10	16.21954	-1.55864	-6.82008	0.0	-0.00000	0.00000
10	11	128.65736	-15.47290	1.72863	-213.24516	-509.05103	177.54430
10	9	-128.65736	15.47290	-1.72863	213.24516	197.89723	-2962.66675
11	13	133.30605	65.52385	-8.04131	-212.51260	492.89478	9160.75000
11	9	-133.30605	-65.52385	8.04131	212.51260	954.54053	2633.54468
12	12	116.46086	13.06368	13.98564	-54.28261	-2793.26562	2721.29370
12	4	-116.46086	-13.06368	-13.98564	54.28261	-1441.98071	1234.75488

RESULTANT JOINT LOADS - SUPPORTS

JOINT	FORCE			MOMENT		
	X FORCE	Y FORCE	Z FORCE	X MOMENT	Y MOMENT	Z MOMENT
1	-17.31166	83.79099	-43.39365	-20469.33984	-7609.83203	680.64697
10	16.21954	-1.55864	-6.82008	0.0	-0.00000	0.00000
11	-11.27002	128.65736	10.74177	-463.21899	-213.24516	275.83154
12	4.32069	53.72729	104.99580	-3779.68457	896.29590	-348.37354
13	8.04143	133.30605	-65.52383	-9160.74609	-212.51260	-492.91235

RESULTANT JOINT DISPLACEMENTS - SUPPORTS

JOINT	DISPLACEMENT			ROTATION		
	X DISP.	Y DISP.	Z DISP.	X ROT.	Y ROT.	Z ROT.
1	0.0	0.0	0.0	0.0	0.0	0.0
10	0.0	0.0	0.0	0.06315	0.02030	-0.00223
11	0.0	0.0	0.0	0.0	0.0	0.0
12	0.0	0.0	0.0	0.0	0.0	0.0
13	0.0	0.0	0.0	0.0	0.0	0.0

RESULTANT JOINT DISPLACEMENTS - FREE JOINTS

JOINT	DISPLACEMENT			ROTATION		
	X DISP.	Y DISP.	Z DISP.	X ROT.	Y ROT.	Z ROT.
2	0.02909	-0.27097	0.05333	0.09338	0.01188	0.00460
3	0.04916	-0.44824	0.09997	0.10075	0.01262	0.00508
4	0.05561	-0.53279	0.15885	0.10463	0.00935	0.00543
5	0.04733	-0.46646	0.21234	0.10481	0.00763	0.00506
6	0.02997	-0.27786	0.25847	0.11009	0.01106	-0.00008
7	0.00685	-0.07722	0.29003	0.11722	0.01647	-0.00604
8	-0.00136	-0.00926	0.30262	0.12024	0.01874	-0.01913
9	-0.00071	-0.00893	0.08295	0.06315	0.01880	0.01474

LOADING - 2 WIND GROUP II TRANSVERSE

MEMBER FORCES

MEMBER	JOINT	FORCE			MOMENT		
		AXIAL	SHEAR Y	SHEAR Z	TORSIONAL	BENDING Y	BENDING Z
1	1	-7.35993	2.36532	0.07829	-211.25717	-505.23413	1104.13770
1	2	6.53485	-2.20780	-0.07829	211.25717	484.19214	-489.59423
2	2	-5.98205	2.13392	2.69191	-20.71123	-520.96582	496.92090
2	3	5.26541	-1.99342	-2.38877	20.71123	235.74710	-265.22046
3	3	-2.02077	1.35733	5.61058	155.88005	-270.36670	170.14905
3	4	1.36850	-1.22945	-4.00927	-155.88005	-269.67188	-24.93277
4	4	2.03228	1.93826	4.65123	10.17126	261.87964	7.65111
4	5	-1.38000	-2.06613	-3.04992	-10.17126	-694.20605	217.14685
5	5	3.21916	1.70557	1.48436	-104.89117	716.76367	-66.52917
5	6	-2.50252	-1.84607	-1.18122	104.89117	-866.40405	265.91089
6	6	2.71744	1.80393	-0.65360	-211.90923	887.38428	3.18721
6	7	-2.00079	-1.94443	0.35046	211.90923	-831.01855	207.23810
7	7	1.30282	2.08126	-1.37033	-250.15741	839.51685	112.94049
7	8	-0.65054	-2.20914	-0.23098	250.15741	-774.55615	127.91373
8	8	0.20843	0.04290	-8.26016	45.98981	717.78271	24.33043
9	9	-0.20843	-0.04290	-3.73983	-45.98981	909.53491	6.55713
9	9	0.85070	-0.08562	1.97710	-0.00000	-954.50269	-20.54817
9	10	-0.85070	0.08562	-5.97709	0.00000	0.00000	0.00000
10	11	-0.12852	1.76318	0.64106	-44.96791	-134.23436	361.59521
10	9	0.12852	-1.76318	-0.64106	44.96791	18.84399	-44.22346
11	13	-2.25013	8.39168	0.07722	5.82165	-5.12903	1051.11987
11	8	2.25013	-8.39168	-0.07722	-5.82165	-8.77141	459.38232
12	12	-0.16197	1.05114	1.09279	-17.97527	-222.77560	219.30167
12	4	0.16197	-1.05114	-1.09279	17.97527	-108.15129	99.01448

RESULTANT JOINT LOADS - SUPPORTS

JOINT	FORCE			MOMENT		
	X FORCE	Y FORCE	Z FORCE	X MOMENT	Y MOMENT	Z MOMENT
1	-0.07829	0.94321	-7.67292	-1104.13770	-535.88745	-112.76686
10	-0.85070	0.08562	-5.97709	0.00000	0.00000	0.00000
11	0.64227	-0.12852	-1.76273	-363.28198	-44.96791	-129.60017
12	0.36393	1.34982	-0.60900	-302.57983	69.13223	-41.36876
13	-0.07721	-2.25013	-8.39168	-1051.11987	5.82165	5.12702

RESULTANT JOINT DISPLACEMENTS - SUPPORTS

JOINT	DISPLACEMENT			ROTATION		
	X DISP.	Y DISP.	Z DISP.	X ROT.	Y ROT.	Z ROT.
1	0.0	0.0	0.0	0.0	0.0	0.0
10	0.0	0.0	0.0	0.00980	0.00499	0.00002
11	0.0	0.0	0.0	0.0	0.0	0.0
12	0.0	0.0	0.0	0.0	0.0	0.0
13	0.0	0.0	0.0	0.0	0.0	0.0

RESULTANT JOINT DISPLACEMENTS - FREE JOINTS

JOINT	DISPLACEMENT			ROTATION		
	X DISP.	Y DISP.	Z DISP.	X ROT.	Y ROT.	Z ROT.
2	0.00239	-0.01780	0.00374	0.00687	0.00135	0.00166
3	0.00434	-0.03265	0.00783	0.00813	0.00168	0.00219
4	0.00467	-0.04295	0.01398	0.00879	0.00155	0.00230
5	0.00286	-0.04033	0.01976	0.00889	0.00113	0.00194
6	0.00077	-0.02553	0.02383	0.00924	0.00054	0.00123
7	-0.00002	-0.00798	0.02728	0.00993	-0.00003	0.00053
8	0.00006	0.00016	0.03169	0.01090	-0.00051	0.00015
9	0.00004	0.00001	0.01936	0.00980	0.00397	-0.00006

LOADING - 3 WIND GROUP II LONGITUDINAL

MEMBER FORCES

MEMBER	JOINT	FORCE			MOMENT		
		AXIAL	SHEAR Y	SHEAR Z	TORSIONAL	BENDING Y	BENDING Z
1	1	1.10208	0.08479	0.94519	-4.79272	-209.63135	22.74709
1	2	-1.10208	-0.08479	-0.94519	4.79272	-44.40547	0.04098
2	2	1.37810	0.02530	0.46405	-3.61088	44.24013	4.95938
2	3	-1.22156	-0.05599	-0.07973	3.61088	-74.76698	-0.39636
3	3	0.93659	0.11185	-0.78229	1.79776	73.70662	12.93917
3	4	-0.76460	-0.14557	0.85504	-1.79776	14.20999	1.51308
4	4	0.33245	-0.08520	-0.22565	1.17959	-9.54850	-1.35519
4	5	-0.16345	0.05148	0.15289	-1.17959	30.79884	-6.31818
5	5	0.00659	-0.02132	-0.22644	3.52882	-31.25941	-0.52638
5	6	0.14995	-0.00937	-0.15788	-3.52882	35.10838	-0.14454
6	6	0.00273	-0.02056	0.21695	0.68196	-34.55025	-7.13343
6	7	-0.15928	0.05125	-0.60127	-0.68196	-11.38283	3.10179
7	7	0.52828	-0.12360	0.30848	-1.03164	11.71880	-1.12295
7	8	-0.70028	0.15731	-0.38123	1.03164	-50.43803	-14.64671
8	8	0.74646	0.02057	-0.06110	4.49493	47.80954	11.15114
8	9	-0.74646	-0.02057	0.06110	-4.49493	-3.81624	3.65706
9	9	0.72753	-0.02210	-0.01640	0.00000	3.93531	-5.30324
9	10	-0.72753	0.02210	0.01640	-0.00000	-0.00000	0.0
10	11	-0.04266	-0.04641	-0.01423	0.11907	0.93385	-3.85310
10	9	0.04266	0.04641	0.01423	-0.11907	1.62825	-4.50145
11	13	0.04022	0.13815	0.06233	-1.48783	-4.73512	16.09010
11	8	-0.04022	-0.13815	-0.06233	1.48783	-6.48466	8.77673
12	12	-1.03682	-0.04941	0.04172	-0.56067	-7.26971	-7.67180
12	4	1.03682	0.04941	-0.04172	0.56067	-5.36295	-7.28966

RESULTANT JOINT LOADS - SUPPORTS

JOINT	FORCE			MOMENT		
	X FORCE	Y FORCE	Z FORCE	X MOMENT	Y MOMENT	Z MOMENT
1	-0.94519	0.28995	1.06663	-22.74709	-206.81148	34.60291
10	-0.72753	0.02210	0.01640	-0.00000	-0.00000	0.0
11	-0.01893	-0.04266	0.04470	3.55191	0.11907	1.76135
12	-0.04364	-0.30960	-0.98958	-2.45987	-9.94882	2.64382
13	-0.06233	0.04027	-0.13815	-16.09012	-1.48783	4.73509

RESULTANT JOINT DISPLACEMENTS - SUPPORTS

JOINT	DISPLACEMENT			ROTATION		
	X DISP.	Y DISP.	Z DISP.	X ROT.	Y ROT.	Z ROT.
1	0.0	0.0	0.0	0.0	0.0	0.0
10	0.0	0.0	0.0	0.00003	-0.00001	0.00001
11	0.0	0.0	0.0	0.0	0.0	0.0
12	0.0	0.0	0.0	0.0	0.0	0.0
13	0.0	0.0	0.0	0.0	0.0	0.0

RESULTANT JOINT DISPLACEMENTS - FREE JOINTS

JOINT	DISPLACEMENT			ROTATION		
	X DISP.	Y DISP.	Z DISP.	X ROT.	Y ROT.	Z ROT.
2	0.00060	-0.00031	0.00000	0.00010	0.00017	0.00001
3	0.00087	-0.00051	0.00013	0.00010	0.00012	0.00004
4	0.00094	-0.00068	0.00035	0.00011	0.00010	0.00006
5	0.00085	-0.00071	0.00058	0.00011	0.00012	0.00007
6	0.00059	-0.00056	0.00072	0.00012	0.00014	0.00009
7	0.00028	-0.00026	0.00066	0.00014	0.00016	0.00010
8	0.00013	-0.00000	0.00045	0.00013	0.00013	0.00007
9	0.00003	0.00000	-0.00005	0.00003	-0.00001	-0.00001

LOADING - 4 OVERTURNING

MEMBER FORCES

MEMBER	JOINT	FORCE			MOMENT		
		AXIAL	SHEAR Y	SHEAR Z	TORSIONAL	BENDING Y	BENDING Z
1	1	-14.88683	2.71212	1.01065	-231.16748	-1060.79590	2304.18970
1	2	14.88683	-2.71212	-1.01065	231.16748	789.16650	-1575.25879
2	2	-13.35845	2.48883	6.73444	363.49536	-905.35913	1485.21289
2	3	12.99845	-4.32514	-6.73444	310.15942	149.24342	-1102.69092
3	3	-4.44121	2.64753	14.36264	532.78638	-314.49829	975.51514
3	4	4.08121	-4.48384	-14.36264	140.86836	-1298.07886	-575.17505
4	4	2.35676	11.74901	-1.10221	170.80655	1227.73584	808.22461
4	5	-2.71676	-13.58532	1.10221	502.84839	-1103.98389	613.99219
5	5	1.93808	13.73798	-0.81757	-726.11621	1147.75488	63.54565
5	6	-2.29808	-15.57429	0.81757	1399.77075	-1055.96191	1581.98389
6	6	1.94369	15.64376	-0.05243	-2044.31079	1182.32080	-0.32770
6	7	-2.30369	-17.48006	0.05243	1370.65576	-1176.43481	1859.83081
7	7	2.58302	17.42529	0.74108	-2209.23584	1340.83472	-207.61411
7	8	-2.94302	-19.76161	-0.74108	1535.58081	-1424.04077	2267.14160
8	8	0.48514	-7.62228	-5.95291	-2893.58862	1085.03882	-1297.67676
8	9	-0.48514	-4.37771	5.95281	-1436.40967	3200.98560	129.63110
9	9	-5.14773	-6.13542	13.68261	-1439.99878	-3283.82666	-992.50317
9	10	5.14773	2.13543	-13.68261	-0.00000	-0.00000	0.00000
10	11	-10.51314	-18.66232	-8.30641	-82.84055	307.22729	-601.12061
10	9	10.51314	18.66232	8.30641	82.84055	1187.92676	-2758.09863
11	12	-27.09027	6.95071	-0.95611	-16.98003	58.60385	1620.75879
11	8	27.09027	-6.95071	0.95611	16.98003	113.49530	-369.63086
12	12	17.92587	1.95384	2.30482	-41.04701	-492.21436	477.28125
12	4	-17.92587	-1.95384	-2.30482	41.04701	-205.75079	114.39505

RESULTANT JOINT LOADS - SUPPORTS

JOINT	FORCE			MOMENT		
	X FORCE	Y FORCE	Z FORCE	X MOMENT	Y MOMENT	Z MOMENT
1	-1.01065	-0.12760	-15.13134	-2304.18970	-1085.32788	-28.14360
10	5.14773	2.13543	-13.68261	-0.00000	-0.00000	0.00000
11	-5.63287	-10.51314	19.63542	657.96680	-82.84055	151.04424
12	0.53967	8.36802	16.12923	-664.91040	146.35635	-90.72624
13	0.95612	-27.09027	-6.95071	-1620.75879	-16.98003	-58.60696

RESULTANT JOINT DISPLACEMENTS - SUPPORTS

JOINT	DISPLACEMENT			ROTATION		
	X DISP.	Y DISP.	Z DISP.	X ROT.	Y ROT.	Z ROT.
1	0.0	0.0	0.0	0.0	0.0	0.0
10	0.0	0.0	0.0	0.05962	0.01031	0.00080
11	0.0	0.0	0.0	0.0	0.0	0.0
12	0.0	0.0	0.0	0.0	0.0	0.0
13	0.0	0.0	0.0	0.0	0.0	0.0

RESULTANT JOINT DISPLACEMENTS - FREE JOINTS

JOINT	DISPLACEMENT			ROTATION		
	X DISP.	Y DISP.	Z DISP.	X ROT.	Y ROT.	Z ROT.
2	0.00466	-0.04097	0.00856	0.01679	0.00225	0.00166
3	0.00807	-0.07674	0.01787	0.02124	0.00267	0.00331
4	0.00810	-0.10125	0.03070	0.02292	0.00212	0.00571
5	0.00459	-0.09573	0.04211	0.02203	0.00126	0.00579
6	0.00118	-0.05926	0.05132	0.02295	0.00109	0.00102
7	-0.00040	-0.01566	0.05997	0.02846	0.00132	-0.00365
8	-0.00016	0.00188	0.06966	0.03666	0.00150	-0.00227
9	-0.00022	0.00073	0.03899	0.05390	0.00731	-0.00242

LOADING = 5

MEMBER FORCES

MEMBER	JOINT	FORCE			MOMENT		
		AXIAL	SHEAR Y	SHEAR Z	TORSIONAL	BENDING Y	BENDING Z
1	1	-48.05582	95.60393	19.34579	-1205.65771	-9378.12500	23900.37891
1	2	57.77272	-40.22656	-19.34579	1205.65771	4178.60156	-5646.98047
2	2	-45.47408	38.14023	42.51546	928.19727	-4594.96875	5369.11719
2	3	49.07198	-16.82108	-41.82800	-254.54242	-139.89711	-2283.70483
3	3	-5.37381	8.25425	65.90581	1772.98975	-157.78416	1459.89087
3	4	9.05152	13.04924	-64.23177	-1099.33472	-7147.87109	-1729.07080
4	4	-0.07503	49.52832	-58.55231	275.11792	6917.70312	2286.79370
4	5	5.05729	-28.48056	60.08086	398.53662	-257.88525	2092.45874
5	5	-43.69418	36.05515	-35.17487	-1722.09766	517.36133	-1170.65771
5	6	48.72537	-15.01700	35.09370	2395.75171	3427.37061	4037.74268
6	6	-58.48698	16.93071	11.12946	-4713.76562	-2972.93359	-1652.85864
6	7	63.20502	4.16882	-11.81691	4040.11060	1684.77173	2369.28564
7	7	-37.48482	-9.21115	51.59401	-4639.10547	-1567.33789	892.50879
7	8	42.12309	30.32634	-53.26807	3965.45264	-4319.40234	-3112.06177
8	8	-3.50950	66.14218	-18.19576	-436.36890	3250.66870	5737.50781
8	9	3.50950	72.45743	6.19576	-3883.62964	5530.27734	-8010.99219
9	9	-19.78903	45.51544	22.46338	-1439.99878	-5871.21094	5379.71094
9	10	19.78903	0.68451	-26.46338	-0.00000	-0.00000	0.00000
10	11	117.97292	-32.41846	-5.95095	-340.93433	-335.12427	-65.83411
10	9	-117.97292	32.41846	5.95095	340.93433	1406.29590	-5769.48828
11	13	104.00580	81.00430	-8.85785	-225.15872	541.63452	11848.71875
11	8	-104.00580	-81.00430	8.85785	225.15872	1052.77881	2732.07080
12	12	133.18785	16.01924	17.42496	-113.86548	-3515.52368	3410.20361
12	4	-133.18785	-16.01924	-17.42496	113.86548	-1761.24365	1440.87378

RESULTANT JOINT LOADS - SUPPORTS

JOINT	FORCE			MOMENT		
	X FORCE	Y FORCE	Z FORCE	X MOMENT	Y MOMENT	Z MOMENT
1	-19.34579	84.89648	-65.13129	-23900.37891	-9437.85547	574.33936
10	19.78903	0.68451	-26.46338	-0.00000	-0.00000	0.00000
11	-16.27954	117.97292	28.65915	-164.98236	-340.93433	299.03687
12	5.16064	63.13553	119.52635	-4749.63281	1101.83472	-477.82471
13	8.85801	104.00580	-81.00430	-11848.71484	-225.15872	-541.65723

RESULTANT JOINT DISPLACEMENTS - SUPPORTS

JOINT	DISPLACEMENT			ROTATION		
	X DISP.	Y DISP.	Z DISP.	X ROT.	Y ROT.	Z ROT.
1	0.0	0.0	0.0	0.0	0.0	0.0
10	0.0	0.0	0.0	0.13260	0.03558	-0.00140
11	0.0	0.0	0.0	0.0	0.0	0.0
12	0.0	0.0	0.0	0.0	0.0	0.0
13	0.0	0.0	0.0	0.0	0.0	0.0

RESULTANT JOINT DISPLACEMENTS - FREE JOINTS

JOINT	DISPLACEMENT			ROTATION		
	X DISP.	Y DISP.	Z DISP.	X ROT.	Y ROT.	Z ROT.
2	0.03674	-0.33004	0.06564	0.11714	0.01565	0.00793
3	0.06245	-0.55814	0.12579	0.13022	0.01710	0.01062
4	0.06932	-0.67767	0.20388	0.13645	0.01312	0.01350
5	0.05563	-0.60323	0.27479	0.13583	0.01014	0.01285
6	0.03241	-0.36320	0.33434	0.14240	0.01283	0.00226
7	0.00671	-0.10112	0.37793	0.15575	0.01792	-0.00906
8	-0.00132	-0.00722	0.40442	0.16794	0.01986	-0.02118
9	-0.00086	-0.00819	0.14124	0.12688	0.03007	0.01224

SECTION FRACTION DS 0.0 0.1 $ 14T 15 0680

LIST SECTION STRESS MEMBER 8 $ 14T 15 0690

****
RESULTS OF LATEST ANALYSES
****

PROBLEM - PROB 5.4 TITLE - PEDESTRIAN OVERCROSSING

ACTIVE UNITS INCH KIP DEG DEGF SEC

ACTIVE STRUCTURE TYPE SPACE FRAME

ACTIVE COORDINATE AXES X Y Z

INTERNAL MEMBER RESULTS

MEMBER NORMAL STRESS

MEMBER 8

LOADING 1 DEADLOAD PLUS LIVELOAD

DISTANCE FROM START		AXIAL	Y SHEAR	Z SHEAR	Y BENDING	Z BENDING	MAX NORMAL	MIN NORMAL
0.0	FR	0.00270	0.0	0.0	-0.01495	-0.71066	0.72831	-0.72290
0.100		0.00270	0.0	0.0	-0.01193	-0.22695	0.24159	-0.23618
0.200		0.00270	0.0	0.0	-0.00892	0.14667	0.15829	-0.15289
0.300		0.00270	0.0	0.0	-0.00590	0.41020	0.41881	-0.41340
0.400		0.00270	0.0	0.0	-0.00289	0.56365	0.56924	-0.56383
0.500		0.00270	0.0	0.0	0.00013	0.60700	0.60983	-0.60442
0.600		0.00270	0.0	0.0	0.00314	0.54027	0.54611	-0.54071
0.700		0.00270	0.0	0.0	0.00616	0.36345	0.37231	-0.36691
0.800		0.00270	0.0	0.0	0.00917	0.07655	0.08842	-0.08302
0.900		0.00270	0.0	0.0	0.01218	-0.32044	0.33533	-0.32992
1.000		0.00270	0.0	0.0	0.01520	-0.82752	0.84542	-0.84001

LOADING 2 WIND GROUP II TRANSVERSE

DISTANCE FROM START		AXIAL	Y SHEAR	Z SHEAR	Y BENDING	Z BENDING	MAX NORMAL	MIN NORMAL
0.0	FR	-0.00011	0.0	0.0	-0.00766	-0.00247	0.01002	-0.01025
0.100		-0.00011	0.0	0.0	-0.00178	-0.00216	0.00382	-0.00405
0.200		-0.00011	0.0	0.0	0.00319	-0.00184	0.00492	-0.00515
0.300		-0.00011	0.0	0.0	0.00724	-0.00153	0.00865	-0.00888
0.400		-0.00011	0.0	0.0	0.01036	-0.00122	0.01146	-0.01169
0.500		-0.00011	0.0	0.0	0.01256	-0.00090	0.01334	-0.01357
0.600		-0.00011	0.0	0.0	0.01383	-0.00059	0.01431	-0.01453
0.700		-0.00011	0.0	0.0	0.01419	-0.00028	0.01435	-0.01457
0.800		-0.00011	0.0	0.0	0.01362	0.00004	0.01354	-0.01377
0.900		-0.00011	0.0	0.0	0.01213	0.00035	0.01236	-0.01259
1.000		-0.00011	0.0	0.0	0.00971	0.00067	0.01026	-0.01049

LOADING 3 WIND GROUP II LONGITUDINAL

DISTANCE FROM START		AXIAL	Y SHEAR	Z SHEAR	Y BENDING	Z BENDING	MAX NORMAL	MIN NORMAL
0.0	FR	-0.00041	0.0	0.0	-0.00051	-0.00113	0.00124	-0.00205
0.100		-0.00041	0.0	0.0	-0.00046	-0.00098	0.00104	-0.00185
0.200		-0.00041	0.0	0.0	-0.00042	-0.00083	0.00084	-0.00166
0.300		-0.00041	0.0	0.0	-0.00037	-0.00068	0.00064	-0.00146
0.400		-0.00041	0.0	0.0	-0.00032	-0.00053	0.00045	-0.00126
0.500		-0.00041	0.0	0.0	-0.00029	-0.00038	0.00025	-0.00106
0.600		-0.00041	0.0	0.0	-0.00023	-0.00023	0.00005	-0.00087
0.700		-0.00041	0.0	0.0	-0.00018	-0.00008	-0.00015	-0.00067
0.800		-0.00041	0.0	0.0	-0.00013	0.00007	-0.00020	-0.00061
0.900		-0.00041	0.0	0.0	-0.00009	0.00022	-0.00010	-0.00072
1.000		-0.00041	0.0	0.0	-0.00004	0.00037	0.00000	-0.00082

LOADING 4 OVERTURNING

DISTANCE FROM START		AXIAL	Y SHEAR	Z SHEAR	Y BENDING	Z BENDING	MAX NORMAL	MIN NORMAL
0.0	FR	-0.00026	0.0	0.0	-0.01159	0.13175	0.14307	-0.14360
0.100		-0.00026	0.0	0.0	-0.00701	0.08042	0.08716	-0.08769
0.200		-0.00026	0.0	0.0	-0.00243	0.03786	0.04002	-0.04055
0.300		-0.00026	0.0	0.0	0.00214	0.00407	0.00595	-0.00648
0.400		-0.00026	0.0	0.0	0.00672	-0.02095	0.02740	-0.02793
0.500		-0.00026	0.0	0.0	0.01130	-0.03719	0.04823	-0.04875
0.600		-0.00026	0.0	0.0	0.01587	-0.04467	0.06027	-0.06080
0.700		-0.00026	0.0	0.0	0.02045	-0.04337	0.06355	-0.06408
0.800		-0.00026	0.0	0.0	0.02502	-0.03330	0.05806	-0.05859
0.900		-0.00026	0.0	0.0	0.02960	-0.01445	0.04379	-0.04432
1.000		-0.00026	0.0	0.0	0.03418	0.01316	0.04707	-0.04760

LOADING 5

DISTANCE FROM START		AXIAL	Y SHEAR	Z SHEAR	Y BENDING	Z BENDING	MAX NORMAL	MIN NORMAL
0.0	FR	0.00192	0.0	0.0	-0.03471	-0.58252	0.61914	-0.61531
0.100		0.00192	0.0	0.0	-0.02118	-0.14968	0.17278	-0.16895
0.200		0.00192	0.0	0.0	-0.00858	0.18184	0.19234	-0.18850
0.300		0.00192	0.0	0.0	0.00311	0.41205	0.41707	-0.41324
0.400		0.00192	0.0	0.0	0.01396	0.54094	0.55672	-0.55289
0.500		0.00192	0.0	0.0	0.02370	0.56852	0.59414	-0.59030
0.600		0.00192	0.0	0.0	0.03262	0.49478	0.52931	-0.52548
0.700		0.00192	0.0	0.0	0.04061	0.31973	0.36225	-0.35842
0.800		0.00192	0.0	0.0	0.04768	0.04336	0.09295	-0.08912
0.900		0.00192	0.0	0.0	0.05382	-0.33432	0.39006	-0.38623
1.000		0.00192	0.0	0.0	0.05905	-0.81332	0.87428	-0.87045

5.5 Summit Road Separation

This example is included to illustrate how a designer used STRUDL to analyze the Summit Road Separation. Figure 5.5a shows a general plan of the bridge and Figure 5.5b gives the joint and member configuration of the model for the STRUDL analysis. To reduce the amount of input and output the structural model has been somewhat simplified and only three of many loading conditions are included in the analysis. The superstructure girders have all been lumped into a single longitudinal girder and modeled as a single line element. The abutments have also been modeled as single line elements to permit application of the earth pressure loadings.

The loading conditions presented include the dead load, the earth pressures at the abutments, a temperature loading and a combination of these loadings. Note that the earth pressures applied to the abutments tend to rotate the whole structure in a clockwise direction as seen in plan view. For the temperature loading the designer has assumed a 20 percent differential between the portion subjected to direct sun and the unexposed portions, thus inducing a temperature bending moment in the girder members.

The usual form of data input was used in this submittal to the STRUDL program. The first command, shown on the coding form below, identifies the subsystem (i.e., STRUDL) to be used and the identification that will be used for the problem. The joint coordinates were determined and entered in the standard x-y-z order. In this particular submittal several useful comments were entered just after the JOINT COORDINATES COMMAND. Since comments are reproduced as submitted, they can be used as headings for tabular type entries. After the joint coordinates have been given, the member incidences are given in the usual manner with the exception of using a comment statement for column headings - member numbers, and the start and end joints of the members.

The next command, MEMBER RELEASES, is used to specify the release condition at the abutment supports. Following this command the constants are given for the materials being used for the members. In this case the material is concrete with a Young's Modulus of 3 x 10^6 psi. Converted to the units specified in command 0030 the entry should be CONSTANTS E 432000 ALL. The next "CONSTANTS" command describes the BETA angles and the coefficient of thermal expansion (CTE).

STATE OF CALIFORNIA - BUSINESS AND TRANSPORTATION AGENCY - DEPARTMENT OF PUBLIC WORKS - DIVISION OF ADMINISTRATIVE SERVICES

COMPUTER SYSTEMS

ICES

b	b	ADDRESS DIST.	ADDRESS GROUP	BATCH
	$	148	25	

SUBSYSTEM NAME	b	b	SOURCE DIST.	SOURCE UNIT	CHARGE DIST.	CHARGE UNIT	EXPENDITURE AUTHORIZATION	SPECIAL DESIGNATION WHEN APPLICABLE	b	SEQUENCE
STRUDL 'PROB 5.5' 'SUMMIT RD SEP.'		$								0001

```
TYPE SPACE FRAME                                                        20
UNITS KIPS, FEET, DEGREES                                               30
$ Y AXIS DATUM=1.775                                                    40
$ JOINT COORDINATES WERE SELECTED TO BE APPROXIMATELY AT                50
$ THE CENTROIDS OF THE MEMBERS FRAMING INTO THE JOINT                   60
```

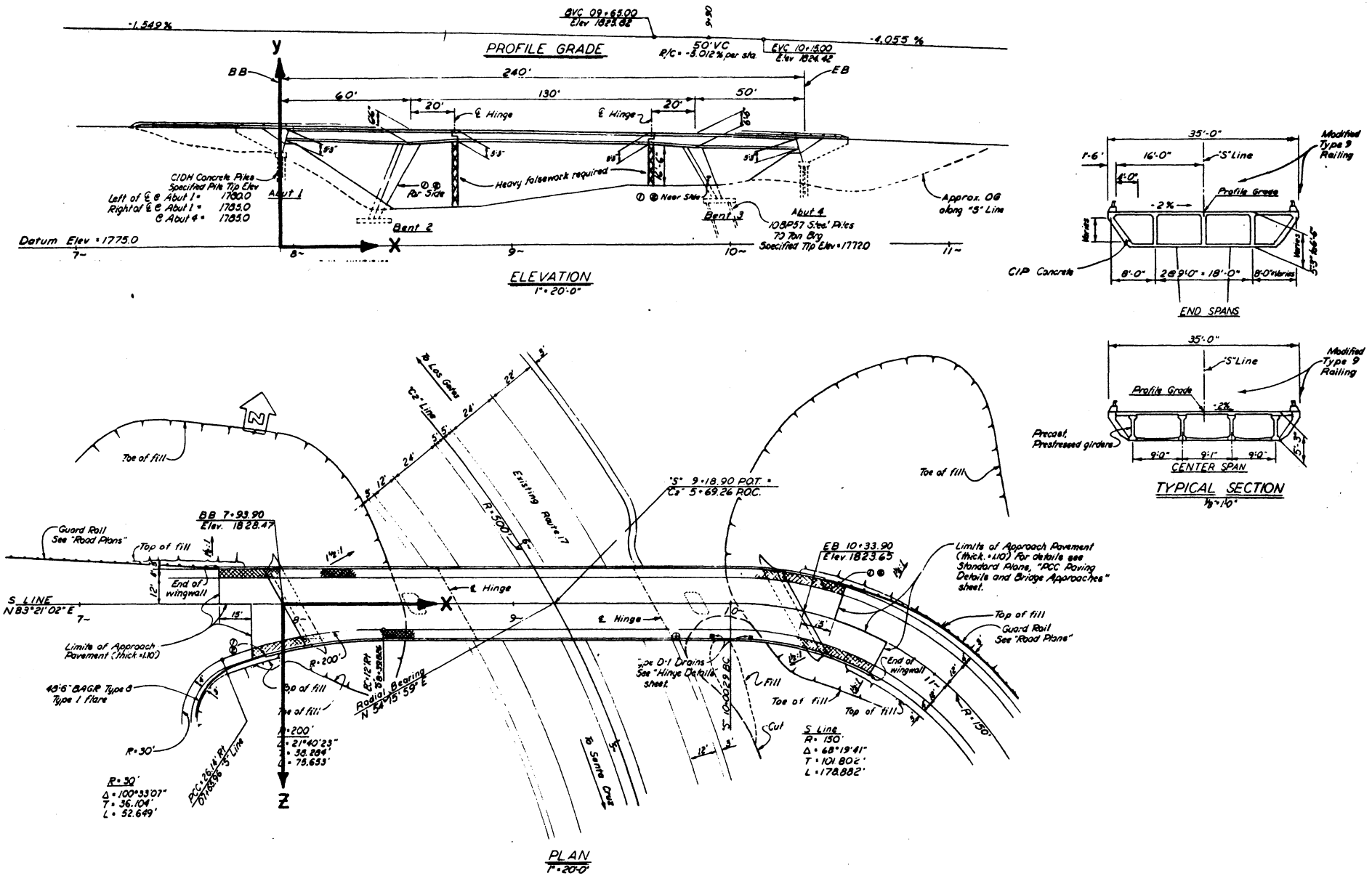

GENERAL PLAN

GLOBAL AXES DIRECTIONS SHOWN

Figure 5.5a

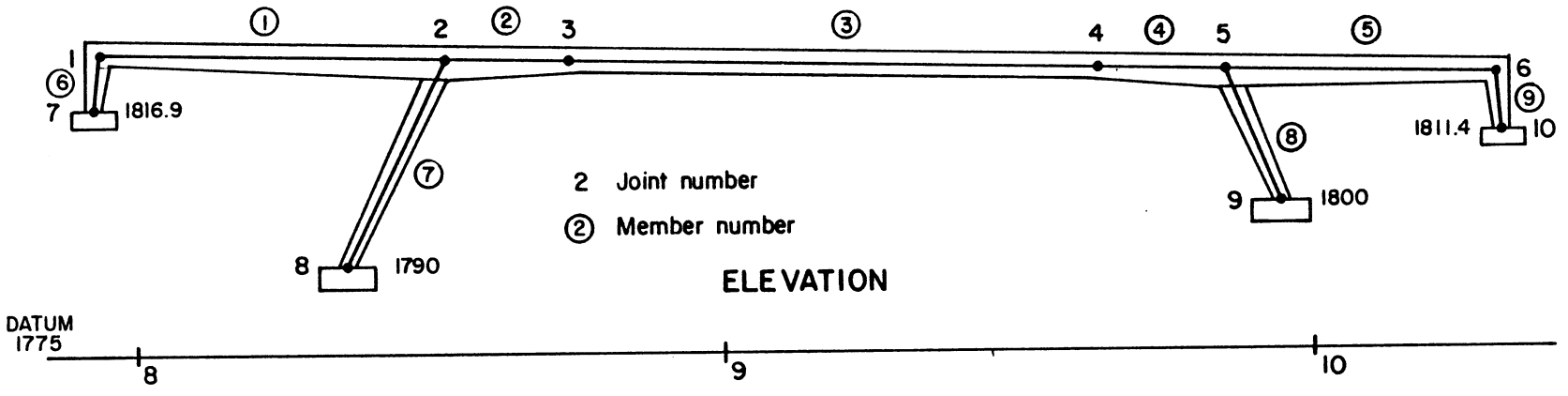

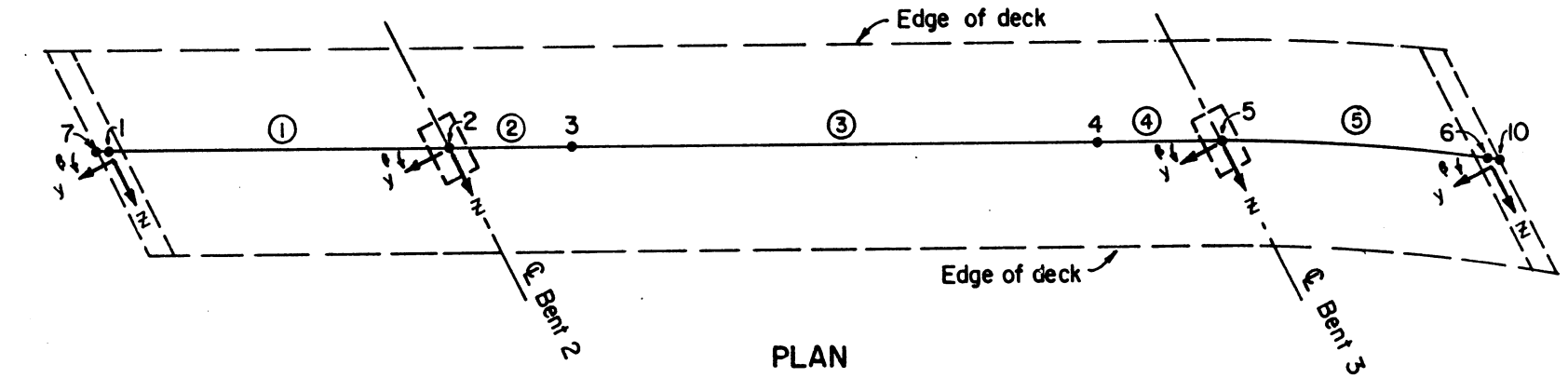

MODELED STRUCTURE

Figure 5.5 b

```
JOINT COORDINATES                                                                  70
$ JT      X          Y          Z          SUPPORT                                  80
   1     0.75       50.8       0                                                    90
   2    59.0        49.7       0                                                   100
   3    80.0        49.3       0                                                   110
   4   170.0        47.5       0                                                   120
   5   191.0        47.1       0                                                   130
   6   239.25       46.0       3.75                                                140
   7     0.0        41.9       0          S                                        150
   8    42.1        15.0       0          S                                        160
   9   201.22       25.0       0          S                                        170
  10   240.00       36.4       3.75       S                                        180
MEMBER INCIDENCES                                                                  190
$ MEMBER    START      END                                                         200
   1          1          2                                                         210
   2          2          3                                                         220
   3          3          4                                                         230
   4          4          5                                                         240
   5          5          6                                                         250
   6          7          1                                                         260
   7          8          2                                                         270
   8          9          5                                                         280
   9         10          6                                                         290
MEMBER RELEASES                                                                    300
     6,9 START MOMENT Z                                                            320
CONSTANTS E 432000. ALL                                                            330
CONSTANTS BETA 0.0 ALL BUT 29.08 6 7 8 9                                           340
          CTE .00021 ALL                                                           350
```

The member properties are given next for each member of the frame. Since the properties are variable the members have been modeled as four or three prismatic sections or segments. Each segment's properties have been entered into the STRUDL program with the following commands:

```
MEMBER PROPERTIES                                                                  360
1 VARIABLE                                                                         370
SEG 1 AX 63 IX 720 IY 7000 YD 5.4 IZ 240 L 14.565 YC 2.7                          380
SEG 2 AX 64 IX 830 IY 7100 YD 5.7 IZ 275 L 14.565 YC 2.85                         390
SEG 3 AX 65 IX 920 IY 7200 YD 6.0 IZ 315 L 14.565 YC 3.0                          400
SEG 4 AX 66 IX 1030 IY 7300 YD 6.3 IZ 350 L 14.565 YC 3.15                        410
2 VARIABLE                                                                         420
SEG 1 AX 66 IX 1030 IY 7300 YD 6.3 IZ 350 L 5.251 YC 3.15                         430
SEG 2 AX 65 IX 920 IY 7200 YD 6.0 IZ 315 L 5.251 YC 3.00                          440
SEG 3 AX 64 IX 830 IY 7100 YD 5.7 IZ 275 L 5.251 YC 2.85                          450
SEG 4 AX 63 IX 720 IY 7000 YD 5.4 IZ 240 L 5.251 YC 2.70                          460
3 PRISMATIC AX 35 IX 20 IY 3430 YD 5.3 IZ 105 YC 2.65                              470
4 VARIABLE                                                                         480
SEG 1 AX 63 IX 720 IY 7000 YD 5.4 IZ 240 L 5.251 YC 2.70                          490
SEG 2 AX 64 IX 830 IY 7100 YD 5.7 IZ 275 L 5.251 YC 2.85                          500
SEG 3 AX 65 IX 920 IY 7200 YD 6.0 IZ 315 L 5.251 YC 3.0                           510
SEG 4 AX 66 IX 1030 IY 7300 YD 6.3 IZ 350 L 5.251 YC 3.15                          520
5 VARIABLE                                                                         530
SEG 1 AX 66 IX 1030 IY 7300 YD 6.3 IZ 350 L 12.102 YC 3.15                         540
SEG 2 AX 65 IX 920 IY 7200 YD 6.0 IZ 275 L 12.102 YC 3.00                          550
SEG 3 AX 64 IX 830 IY 7100 YD 5.7 IZ 315 L 12.102 YC 2.85                          560
SEG 4 AX 63 IX 720 IY 7000 YD 5.4 IZ 350 L 12.102 YC 2.70                          570
```

```
6 VARIABLE                                                                  580
      SEG 1    AX  45    IX  15    IY  7600   IZ  4    L   2.990           590
      SEG 2    AX  79    IX 125    IY 13300   IZ 10    L   2.990           600
      SEG 3    AX 113    IX 234    IY 19000   IZ 15    L   2.990           610
7 VARIABLE                                                                  620
      SEG 1    AX  31    IX 143    IY  158    IZ  41   L   9.649           630
      SEG 2    AX  40    IX 260    IY  285    IZ  80   L   9.649           640
      SEG 3    AX  50    IX 380    IY  420    IZ 120   L   9.649           650
      SEG 4    AX  60    IX 510    IY  535    IZ 169   L   9.649           660
8 VARIABLE                                                                  670
      SEG 1    AX  44    IX 228    IY  245    IZ  69   L   6.087           680
      SEG 2    AX  50    IX 320    IY  340    IZ  90   L   6.087           690
      SEG 3    AX  55    IX 420    IY  440    IZ 130   L   6.087           700
      SEG 4    AX  60    IX 510    IY  535    IZ 169   L   6.087           710
9 VARIABLE                                                                  720
      SEG 1    AX  45    IX  15    IY  7600   IZ  4    L   3.209           730
      SEG 2    AX  79    IX 125    IY 13300   IZ 10    L   3.209           740
      SEG 3    AX 113    IX 234    IY 19000   IZ 15    L   3.209           750
```

The next commands to be considered give the loadings that the structure will be designed to support. Loading one describes the dead loads. The loading diagram for this loading is shown in Figure 5.5c. Notice the linear variation in the loadings to account for the variable cross-sectional areas of the members. The abutment dead loads are given as linearly distributed loads to account for the decrease in axial dead load as you move downward in the abutment. Note that WA indicates the start of the member and in this case would refer to joints 10 and 7. Care must be taken to insure the variation of the loading is in the correct direction. The weights of the hinges and the weight of the cap members are taken into consideration with the joint loads command. The following commands show the entries that have been chosen to describe the dead loads:

```
LOADING 1 'DEAD LOAD'                                                       760
MEMBER LOADS                                                                770
   1 FORCE Y GLOBAL LIN FR WA  -9.9 WB -10.5                                780
   2 FORCE Y GLOBAL LIN FR WA -10.5 WB  -9.9                                790
   4 FORCE Y GLOBAL LIN FR WA  -9.9 WB -10.5                                800
   5 FORCE Y GLOBAL LIN FR WA -10.5 WB  -9.9                                810
   3 FORCE Y GLOBAL UNIFORM W -7.32                                         820
 6,9 FORCE Y GLOBAL LIN FR WA -6.75 WB -17.0                                830
   7 FORCE Y GLOBAL LIN FR WA -4.65 WB -8.95                                840
   8 FORCE Y GLOBAL LIN FR WA -6.60 WB -8.95                                850
JOINT LOADS                                                                 860
   2,5 FORCE Y -195                                                         870
   3,4 FORCE Y -100                                                         880
```

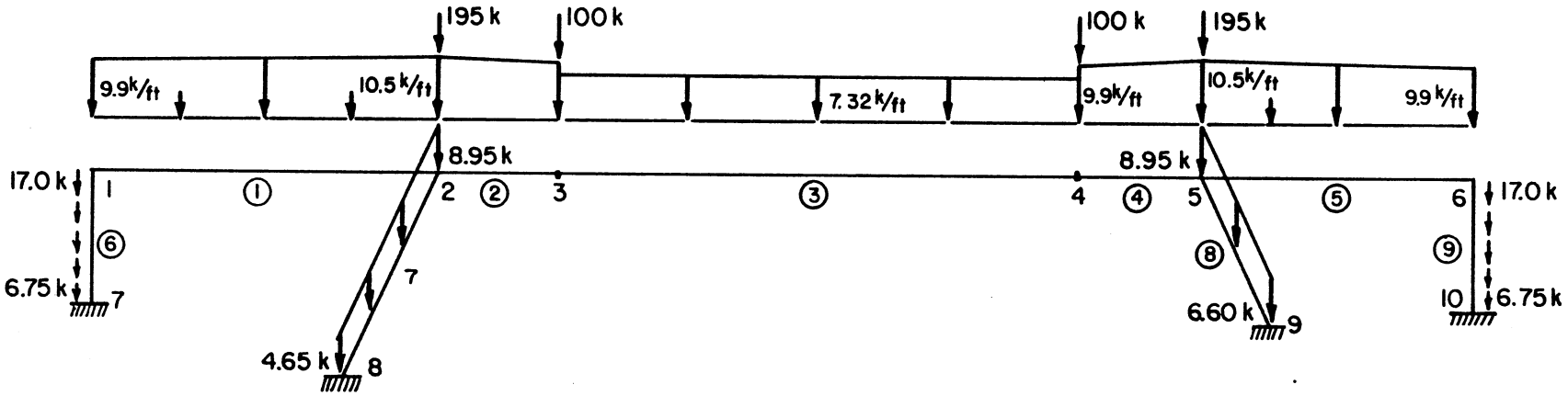

1 Joint number

② Member number

DEAD LOADS

Figure 5.5 c

The next loading condition shown below and in Figure 5.5d, LOADING 2 'EARTH PRESSURE ABUTMENTS 1 AND 2', is used to check the forces that will occur due to earth pressures. Note that these loads will tend to rotate the whole structure. In this problem the designer chose to apply a linearly varying load on the abutment members to simulate the earth pressures acting on the abutments. LOADING 3 'TEMPERATURE LOADS 20 PERCENT DIFFERENTIAL' was included in the loading conditions to determine the effects of a 20 percent temperature differential on the structure. Notice that the superstructure members 1 thru 5 are subjected to both axial and bending temperature loads. The abutments and columns were assumed to have a uniform temperature increase of eighty percent of the specifications requirement for bridges in a moderate temperature range area.

```
LOADING 2 'EARTH PRESSURE AT ABUTMENTS'                                  890
MEMBER LOADS                                                             900
6 FORCE Y LINEAR FR WA 19.7 WB 6.7                                       910
9 FORCE Y LINEAR FR WA -19.7 WB -6.7                                     920
LOADING 3 'TEMPERATURE LOADS 20 PERCENT DIFFERENTIAL'                    930
  MEMBER TEMPERATURE LOADS                                               940
    1 TO 5 FR LA 0.0 LB 1.0 AXI 0.9 BEND Z -0.2                          950
    6 TO 9 FR LA 0.0 LB 1.0 AXI 0.8                                      960
```

Upon completion of the loading commands a LOAD LIST ALL command and PRINT DATA command is given to verify that STRUDL has processed the commands in the manner intended. This technique is useful for finding errors in input commands. Following the PRINT DATA command, STIFFNESS ANALYSIS and LIST FORCES REACTIONS AND DISPLACEMENTS commands are used to obtain the analysis and results for the structure. Following the listing of the forces the following commands are given:

```
LOAD LIST ALL                                                            970
PRINT DATA                                                               980
STIFFNESS ANALYSIS                                                       990
LIST FORCES REACTIONS DISPLACEMENTS                                     1000
```

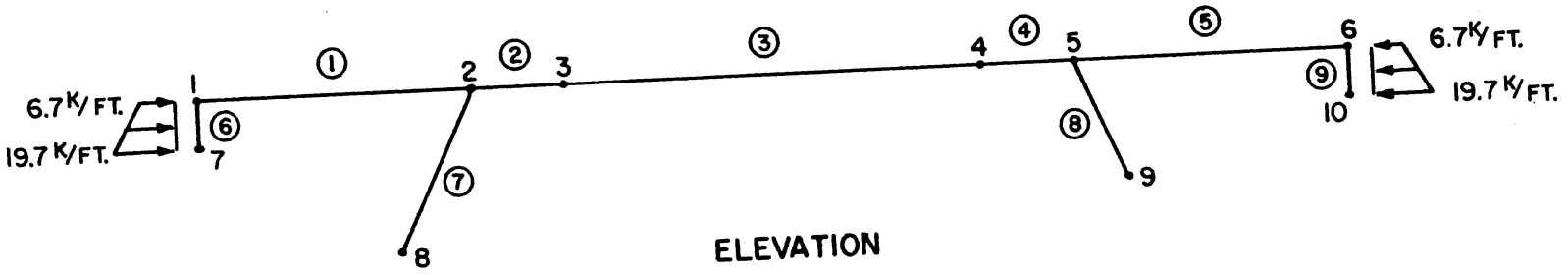

ELEVATION

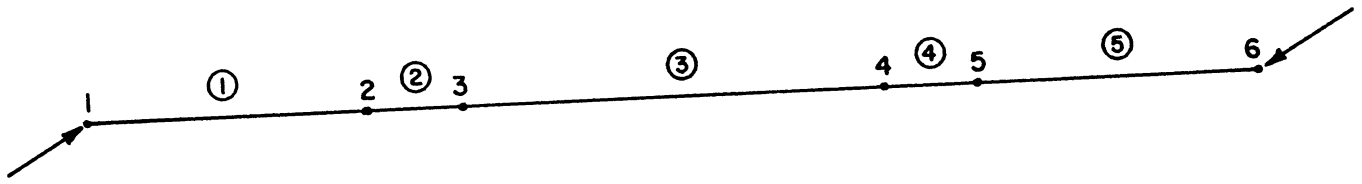

PLAN

① Member numbers

1 Joint numbers

LOADING 2

EARTH PRESSURE AT ABUTMENTS

Figure 5.5d

Loading combination 4 is a combination of the results obtained from loadings 1, 2, and three. The forces and moments from each loading condition for which results have been calculated may be combined in any proportion selected by the designer. In this problem the designer selected one hundred percent of loading conditions one thru three to be combined into loading four.

```
LOADING COMBINATION 4                                    1010
COMBINE 4 1 1.0 2 1.0 3 1.0                              1020
LOAD LIST 4                                              1025
LIST FORCES REACTIONS DISPLACEMENTS                      1030
```

The following output shows the commands given to the program, and the calculated results of the analysis requested. At this point the designer should check the STRUDL 'PROBLEM DATA FROM INTERNAL STORAGE' to determine that STRUDL has the proper structure defined and that the loads imposed are correct both in magnitude and direction. Once the problem is defined correctly a SAVE command could be used to save the problem. The entire problem and results will be saved on secondary storage in the computer for subsequent retrieval, modification additions or deletions. The problem when restored, may be changed at will by the designer to determine the optimum configuration of the structure for the design loading conditions. If the SAVE, RESTORE option is needed special handling will be required in the Bridge Department. For further information on using this STRUDL feature please call Bridge Computer Services, 5-6519.

```
STRUDL 'PROB 5.5' 'SUMMIT RD SEP.' R. A. DOKKEN'                    $ 14B 25    0010

          ***********************************************
          *                                             *
          *     ICES STRUDL II       VERSION 1 MOD 1    *
          *       THE STRUCTURAL DESIGN LANGUAGE        *
          *    MASSACHUSETTS INSTITUTE OF TECHNOLOGY    *
          *              STATE OF CALIFORNIA            *
          *     BRIDGE DEPARTMENT DIVISION OF HWYS.     *
          *    SPECIAL STUDIES SECTION  PH. 445-6519    *
          *     NOVEMBER 1969  INSTALLED APRIL 1970     *
          *           19:42:49        8/20/70           *
          *                                             *
          ***********************************************

TYPE SPACE FRAME                                                    $ 14B 25    0020

UNITS KIPS, FEET, DEGREES                                           $ 14B 25    0030

$ Y AXIS DATUM=1775                                                 $ 14B 25    0040

$ JOINT COORDINATES WERE SELECTED TO BE APPROXIMATELY AT            $ 14B 25    0050

$ THE CENTROIDS OF THE MEMBERS FRAMING INTO THE JOINT               $ 14B 25    0060

JOINT COORDINATES                                                   $ 14B 25    0070

$  JT      X          Y          Z          SUPPORT                  $ 14B 25    0080

    1    0.75       50.8        0                                   $ 14B 25    0090

    2   59.0        49.7        0                                   $ 14B 25    0100

    3   80.0        49.3        0                                   $ 14B 25    0110

    4  170.0        47.5        0                                   $ 14B 25    0120

    5  191.0        47.1        0                                   $ 14B 25    0130

    6  239.25       46.0        3.75                                $ 14B 25    0140

    7    0.0        41.9        0          S                        $ 14B 25    0150

    8   42.1        15.0        0          S                        $ 14B 25    0160

    9  201.22       25.0        0          S                        $ 14B 25    0170

   10  240.00       36.4        3.75       S                        $ 14B 25    0180

MEMBER INCIDENCES                                                   $ 14B 25    0190

$  MEMBER     START       END                                       $ 14B 25    0200

     1          1          2                                        $ 14B 25    0210

     2          2          3                                        $ 14B 25    0220

     3          3          4                                        $ 14B 25    0230

     4          4          5                                        $ 14B 25    0240

     5          5          6                                        $ 14B 25    0250

     6          7          1                                        $ 14B 25    0260

     7          8          2                                        $ 14B 25    0270

     8          9          5                                        $ 14B 25    0280

     9         10          6                                        $ 14B 25    0290
```

```
MEMBER RELEASES                                                    $ 14B 25   0300
     6,9 START MOMENT Z                                            $ 14B 25   0320
CONSTANTS E 432000. ALL                                            $ 14B 25   0330
CONSTANTS BETA 0.0 ALL BUT 29.08 6 7 8 9                           $ 14B 25   0340
          CTE .00021 ALL                                           $ 14B 25   0350
MEMBER PROPERTIES                                                  $ 14B 25   0360
1 VARIABLE                                                         $ 14B 25   0370
SEG 1 AX  63 IX  720 IY  7000 YD 5.4 IZ 240  L 14.565              $ 14B 25   0380
SEG 2 AX  64 IX  830 IY  7100 YD 5.7 IZ 275  L 14.565              $ 14B 25   0390
SEG 3 AX  65 IX  920 IY  7200 YD 6.0 IZ 315  L 14.565              $ 14B 25   0400
SEG 4 AX  66 IX 1030 IY  7300 YD 6.3 IZ 350  L 14.565              $ 14B 25   0410
2 VARIABLE                                                         $ 14B 25   0420
SEG 1 AX  66 IX 1030 IY  7300 YD 6.3 IZ 350  L  5.251              $ 14B 25   0430
SEG 2 AX  65 IX  920 IY  7200 YD 6.0 IZ 315  L  5.251              $ 14B 25   0440
SEG 3 AX  64 IX  830 IY  7100 YD 5.7 IZ 275  L  5.251              $ 14B 25   0450
SEG 4 AX  63 IX  720 IY  7000 YD 5.4 IZ 240  L  5.251              $ 14B 25   0460
3 PRISMATIC AX 35 IX 20 IY 3430 YD 5.3  IZ 105                     $ 14B 25   0470
4 VARIABLE                                                         $ 14B 25   0480
SEG 1 AX  63 IX  720 IY  7000 YD 5.4 IZ 240  L  5.251              $ 14B 25   0490
SEG 2 AX  64 IX  830 IY  7100 YD 5.7 IZ 275  L  5.251              $ 14B 25   0500
SEG 3 AX  65 IX  920 IY  7200 YD 6.0 IZ 315  L  5.251              $ 14B 25   0510
SEG 4 AX  66 IX 1030 IY  7300 YD 6.3 IZ 350  L  5.251              $ 14B 25   0520
5 VARIABLE                                                         $ 14B 25   0530
SEG 1 AX  66 IX 1030 IY  7300 YD 6.3 IZ 350  L 12.102              $ 14B 25   0540
SEG 2 AX  65 IX  920 IY  7200 YD 6.0 IZ 275  L 12.102              $ 14B 25   0550
SEG 3 AX  64 IX  830 IY  7100 YD 5.7 IZ 315  L 12.102              $ 14B 25   0560
SEG 4 AX  63 IX  720 IY  7000 YD 5.4 IZ 350  L 12.102              $ 14B 25   0570
6 VARIABLE                                                         $ 14B 25   0580
      SEG 1    AX  45    IX  15    IY  7600   IZ   4   L  2.990   $ 14B 25   0590
      SEG 2    AX  79    IX 125    IY 13300   IZ  10   L  2.990   $ 14B 25   0600
      SEG 3    AX 113    IX 234    IY 19000   IZ  15   L  2.990   $ 14B 25   0610
7 VARIABLE                                                         $ 14B 25   0620
      SEG 1    AX  31    IX  143   IY  158    IZ  41   L  9.649   $ 14B 25   0630
      SEG 2    AX  40    IX  260   IY  285    IZ  80   L  9.649   $ 14B 25   0640
      SEG 3    AX  50    IX  380   IY  420    IZ 120   L  9.649   $ 14B 25   0650
      SEG 4    AX  60    IX  510   IY  535    IZ 169   L  9.649   $ 14B 25   0660
```

```
8 VARIABLE                                                    $ 148 25    0670
      SEG 1    AX  44    IX  228   IY  245   IZ   69 L  6.087  $ 148 25    0680
      SEG 2    AX  50    IX  320   IY  340   IZ   90 L  6.087  $ 148 25    0690
      SEG 3    AX  55    IX  420   IY  440   IZ  130 L  6.087  $ 148 25    0700
      SEG 4    AX  60    IX  510   IY  535   IZ  169 L  6.087  $ 148 25    0710
9 VARIABLE                                                    $ 148 25    0720
      SEG 1    AX  45    IX  15    IY 7600   IZ  4   L  3.209  $ 148 25    0730
      SEG 2    AX  79    IX 125    IY 13300  IZ 10   L  3.209  $ 148 25    0740
      SEG 3    AX 113    IX 234    IY 19000  IZ 15   L  3.209  $ 148 25    0750
LOADING 1 'DEAD LOAD'                                         $ 148 25    0760
MEMBER LOADS                                                  $ 148 25    0770
   1 FORCE Y GLOBAL LIN FR WA  -9.9 WB -10.5                  $ 148 25    0780
   2 FORCE Y GLOBAL LIN FR WA -10.5 WB  -9.9                  $ 148 25    0790
   4 FORCE Y GLOBAL LIN FR WA  -9.9 WB -10.5                  $ 148 25    0800
   5 FORCE Y GLOBAL LIN FR WA -10.5 WB  -9.9                  $ 148 25    0810
   3 FORCE Y GLOBAL UNIFORM W -7.32                           $ 148 25    0820
 6,9 FORCE Y GLOBAL LIN FR WA -6.75 WB -17.0                  $ 148 25    0830
   7 FORCE Y GLOBAL LIN FR WA -4.65 WB -8.95                  $ 148 25    0840
   8 FORCE Y GLOBAL LIN FR WA -6.60 WB -8.95                  $ 148 25    0850
JOINT LOADS                                                   $ 148 25    0860
   2,5 FORCE Y -195                                           $ 148 25    0870
   3,4 FORCE Y -100                                           $ 148 25    0880
LOADING 2 'EARTH PRESSURE AT ABUTMENTS'                       $ 148 25    0890
MEMBER LOADS                                                  $ 148 25    0900
6 FORCE Y LINEAR FR WA   19.7 WB  6.7                        $ 148 25    0910
9 FORCE Y LINEAR FR WA  -19.7 WB -6.7                        $ 148 25    0920
LOADING 3 'TEMPERATURE LOADS 20 PERCENT DIFFERENTIAL'         $ 148 25    0930
  MEMBER TEMPERATURE LOADS                                    $ 148 25    0940
     1 TO 5 FR LA 0.0 LB 1.0  AXI 0.9  BEND Z -0.2           $ 148 25    0950
     6 TO 9 FR LA 0.0 LB 1.0  AXI 0.8                        $ 148 25    0960
LOAD LIST ALL                                                 $ 148 25    0970
PRINT DATA                                                    $ 148 25    0980
```

```
*****************************************
*  PROBLEM DATA FROM INTERNAL STORAGE  *
*****************************************
```

JOB ID - PROB 5.5 JOB TITLE - SUMMIT RD SEP. R. A. DOKKEN

ACTIVE UNITS -	LENGTH	WEIGHT	ANGLE	TEMPERATURE	TIME
	FEET	KIP	DEG	DEGF	SEC

********** STRUCTURAL DATA **********

ACTIVE STRUCTURE TYPE - SPACE FRAME

ACTIVE COORDINATE AXES X Y Z

JOINT COORDINATES----------/ STATUS---/

JOINT	X	Y	Z	CONDITION	
1	0.750	50.800	0.0		ACTIVE
2	59.000	49.700	0.0		ACTIVE
3	80.000	49.300	0.0		ACTIVE
4	170.000	47.500	0.0		ACTIVE
5	191.000	47.100	0.0		ACTIVE
6	239.250	46.000	3.750		ACTIVE
7	0.0	41.900	0.0	SUPPORT	ACTIVE
8	42.100	15.000	0.0	SUPPORT	ACTIVE
9	201.220	25.000	0.0	SUPPORT	ACTIVE
10	240.000	36.400	3.750	SUPPORT	ACTIVE

JOINT RELEASES----------/ELASTIC SUPPORT RELEASES----------/

JOINT	FORCE	MOMENT	THETA 1	THETA 2	THETA 3	KFX	KFY	KFZ	KMX	KMY	KMZ

MEMBER INCIDENCES----------/ LENGTH------/ RELEASES----------/ STATUS--/

MEMBER	START	END	LOCAL COORD.	START FORCE	START MOMENT	END FORCE	END MOMENT	
1	1	2	58.260					ACTIVE
2	2	3	21.004					ACTIVE
3	3	4	90.018					ACTIVE
4	4	5	21.004					ACTIVE
5	5	6	48.408					ACTIVE
6	7	1	8.932			Z		ACTIVE
7	8	2	38.597					ACTIVE
8	9	5	24.349					ACTIVE
9	10	6	9.629			Z		ACTIVE

MEMBER PROPERTIES----------/

MEMBER/SEG	TYPE	SEG.L	COMP	AX/YD	AY/ZD	AZ/YC	IX/ZC	IY/EY	IZ/EZ	SY	SZ
1	VARIABLE										
1		14.565	L	63.000	0.0	0.0	719.999	6999.988	240.000	0.0	0.0
				5.400	0.0	0.0	0.0	0.0	0.0		
2		14.565	L	64.000	0.0	0.0	829.999	7099.988	275.000	0.0	0.0
				5.700	0.0	0.0	0.0	0.0	0.0		
3		14.565	L	65.000	0.0	0.0	919.999	7199.988	315.000	0.0	0.0
				6.000	0.0	0.0	0.0	0.0	0.0		
4		14.565	L	66.000	0.0	0.0	1029.999	7299.988	350.000	0.0	0.0
				6.300	0.0	0.0	0.0	0.0	0.0		
2	VARIABLE										
1		5.251	L	66.000	0.0	0.0	1029.999	7299.988	350.000	0.0	0.0
				6.300	0.0	0.0	0.0	0.0	0.0		
2		5.251	L	65.000	0.0	0.0	919.999	7199.988	315.000	0.0	0.0
				6.000	0.0	0.0	0.0	0.0	0.0		
3		5.251	L	64.000	0.0	0.0	829.999	7099.988	275.000	0.0	0.0
				5.700	0.0	0.0	0.0	0.0	0.0		
4		5.251	L	63.000	0.0	0.0	719.999	6999.988	240.000	0.0	0.0
				5.400	0.0	0.0	0.0	0.0	0.0		
3	PRISMATIC			35.000	0.0	0.0	20.000	3429.996	105.000	0.0	0.0
				5.300	0.0	0.0	0.0	0.0	0.0		
4	VARIABLE										
1		5.251	L	63.000	0.0	0.0	719.999	6999.988	240.000	0.0	0.0
				5.400	0.0	0.0	0.0	0.0	0.0		
2		5.251	L	64.000	0.0	0.0	829.999	7099.988	275.000	0.0	0.0
				5.700	0.0	0.0	0.0	0.0	0.0		
3		5.251	L	65.000	0.0	0.0	919.999	7199.988	315.000	0.0	0.0
				6.000	0.0	0.0	0.0	0.0	0.0		
4		5.251	L	66.000	0.0	0.0	1029.999	7299.988	350.000	0.0	0.0
				6.300	0.0	0.0	0.0	0.0	0.0		
5	VARIABLE										
1		12.102	L	66.000	0.0	0.0	1029.999	7299.988	350.000	0.0	0.0
				6.300	0.0	0.0	0.0	0.0	0.0		
2		12.102	L	65.000	0.0	0.0	919.999	7199.988	275.000	0.0	0.0
				6.000	0.0	0.0	0.0	0.0	0.0		
3		12.102	L	64.000	0.0	0.0	829.999	7099.988	315.000	0.0	0.0
				5.700	0.0	0.0	0.0	0.0	0.0		
4		12.102	L	63.000	0.0	0.0	719.999	6999.988	350.000	0.0	0.0
				5.400	0.0	0.0	0.0	0.0	0.0		

6	VARIABLE										
	1	2.990	L	45.000	0.0	0.0	15.000	7599.988	4.000	0.0	0.0
				0.0	0.0	0.0	0.0	0.0	0.0		
	2	2.990	L	79.000	0.0	0.0	125.000	13299.980	10.000	0.0	0.0
				0.0	0.0	0.0	0.0	0.0	0.0		
	3	2.990	L	113.000	0.0	0.0	234.000	18999.977	15.000	0.0	0.0
				0.0	0.0	0.0	0.0	0.0	0.0		
7	VARIABLE										
	1	9.649	L	31.000	0.0	0.0	143.000	158.000	41.000	0.0	0.0
				0.0	0.0	0.0	0.0	0.0	0.0		
	2	9.649	L	40.000	0.0	0.0	260.000	285.000	80.000	0.0	0.0
				0.0	0.0	0.0	0.0	0.0	0.0		
	3	9.649	L	50.000	0.0	0.0	380.000	419.999	120.000	0.0	0.0
				0.0	0.0	0.0	0.0	0.0	0.0		
	4	9.649	L	60.000	0.0	0.0	509.999	534.999	169.000	0.0	0.0
				0.0	0.0	0.0	0.0	0.0	0.0		
8	VARIABLE										
	1	6.087	L	44.000	0.0	0.0	228.000	245.000	69.000	0.0	0.0
				0.0	0.0	0.0	0.0	0.0	0.0		
	2	6.087	L	50.000	0.0	0.0	320.000	340.000	90.000	0.0	0.0
				0.0	0.0	0.0	0.0	0.0	0.0		
	3	6.087	L	55.000	0.0	0.0	419.999	439.999	130.000	0.0	0.0
				0.0	0.0	0.0	0.0	0.0	0.0		
	4	6.087	L	60.000	0.0	0.0	509.999	534.999	169.000	0.0	0.0
				0.0	0.0	0.0	0.0	0.0	0.0		
9	VARIABLE										
	1	3.209	L	45.000	0.0	0.0	15.000	7599.988	4.000	0.0	0.0
				0.0	0.0	0.0	0.0	0.0	0.0		
	2	3.209	L	79.000	0.0	0.0	125.000	13299.980	10.000	0.0	0.0
				0.0	0.0	0.0	0.0	0.0	0.0		
	3	3.209	L	113.000	0.0	0.0	234.000	18999.977	15.000	0.0	0.0
				0.0	0.0	0.0	0.0	0.0	0.0		

MEMBER CONSTANTS

CONSTANT	STANDARD VALUE	DOMAIN,	VALUE	MEMBER LIST
E	431999.625000	ALL		
G	0.0	ALL		
DENSITY	1.727999	ALL		
CTE	0.000210	ALL		
BETA	360.000000	ALL BUT	29.079971	6 7 8 9
POISSON	0.0	ALL		

********** DESIGN DATA **********

USER DATA SET

PARAMETER DICTIONARY

NAME	TREATMENT	STANDARD	L	W	A	TEMP	TIME

STRUDL DATA SET

PARAMETER DICTIONARY

NAME	TREATMENT	STANDARD	L	W	A	TEMP	TIME
FYLD	STANDARD	5184.00	-2	1			
PF	STANDARD	1.00					
FBLTUP	STANDARD	1.00					
CODE	REQUIRED						
KY	STANDARD	1.00					
KZ	STANDARD	1.00					
CB	STANDARD	1.00					
LY	COMPUTE	QQSTULEN					
LZ	COMPUTE	QQSTULEN					
CMY	STANDARD	0.85					
CMZ	STANDARD	0.85					
UNLCF	COMPUTE	QQSTULEN					
VALUES	STANDARD	1.00					
TRACE	STANDARD	1.00					
PRIOTA	STANDARD	1.00					
TBLNAM	STANDARD	STEELWF					
MXTRIALS	STANDARD	25.00					
SECNDARY	STANDARD	1.00					

```
USER DATA SET

CONSTRAINT DICTIONARY------------/
NAME                    RETRIEVAL


STRUDL DATA SET

CONSTRAINT DICTIONARY------------/
NAME                    RETRIEVAL

AX                      TABULAR
AY                      TABULAR
AZ                      TABULAR
IX                      TABULAR
IY                      TABULAR
IZ                      TABULAR
SY                      TABULAR
SZ                      TABULAR
YD                      TABULAR
ZD                      TABULAR
FLTK                    TABULAR
WBTK                    TABULAR
YD/AFL                  TABULAR
RY                      TABULAR
RZ                      TABULAR
COMP                    TABULAR
YC                      TABULAR
ZC                      TABULAR
WEIGHT                  TABULAR


          ********** LOADING DATA **********


LOADING - 1             DEAD LOAD                                                    STATUS - ACTIVE

MEMBER AND ELEMENT LOADS-----------------------------------------------------------------------------------------------/
MEMBER/ELEMENT
1          LINEAR,   LOAD GL FORCE  Y  FR   WA   -9.900   LA  0.0     WB  -10.500  LB   1.000
2          LINEAR,   LOAD GL FORCE  Y  FR   WA  -10.500   LA  0.0     WB   -9.900  LB   1.000
3          UNIFORM   LOAD GL FORCE  Y  FR   W    -7.320   LA  0.0     LB   1.000
4          LINEAR,   LOAD GL FORCE  Y  FR   WA   -9.900   LA  0.0     WB  -10.500  LB   1.000
5          LINEAR,   LOAD GL FORCE  Y  FR   WA  -10.500   LA  0.0     WB   -9.900  LB   1.000
6          LINEAR,   LOAD GL FORCE  Y  FR   WA   -6.750   LA  0.0     WB  -17.000  LB   1.000
7          LINEAR,   LOAD GL FORCE  Y  FR   WA   -4.650   LA  0.0     WB   -8.950  LB   1.000
8          LINEAR,   LOAD GL FORCE  Y  FR   WA   -6.600   LA  0.0     WB   -8.950  LB   1.000
9          LINEAR,   LOAD GL FORCE  Y  FR   WA   -6.750   LA  0.0     WB  -17.000  LB   1.000

JOINT LOADS-----------------------------------------/ ------------------------------------/
JOINT      STEP   FORCE X          Y          Z      MOMENT X          Y          Z
2                      0.0     -195.000       0.0          0.0        0.0        0.0
3                      0.0     -100.000       0.0          0.0        0.0        0.0
4                      0.0     -100.000       0.0          0.0        0.0        0.0
5                      0.0     -195.000       0.0          0.0        0.0        0.0

JOINT DISPLACEMENTS---------------------------------/ ------------------------------------/
JOINT      STEP   DISP. X          Y          Z      ROT.   X          Y          Z

JOINT FORCE ASSUMPTIONS ------------------------------------------------------------------------------------------------/

JOINT      THETA  1        2        3     FORCE X          Y          Z      MOMENT X          Y          Z
NO ASSUMPTIONS GIVEN FOR THIS LOADING


MEMBER FORCE ASSUMPTIONS ----------------------/    ----------------------------------/

MEMBER       COMPONENT   DISTANCE     VALUE         COMPONENT   DISTANCE     VALUE
NO ASSUMPTIONS GIVEN FOR THIS LOADING


LOADING - 2             EARTH PRESSURE AT ABUTMENTS                                  STATUS - ACTIVE

MEMBER AND ELEMENT LOADS-----------------------------------------------------------------------------------------------/
MEMBER/ELEMENT
6          LINEAR,   LOAD    FORCE  Y  FR   WA   19.700   LA  0.0     WB    6.700  LB   1.000
9          LINEAR,   LOAD    FORCE  Y  FR   WA  -19.700   LA  0.0     WB   -6.700  LB   1.000

JOINT LOADS-----------------------------------------/ ------------------------------------/
JOINT      STEP   FORCE X          Y          Z      MOMENT X          Y          Z

JOINT DISPLACEMENTS---------------------------------/ ------------------------------------/
JOINT      STEP   DISP. X          Y          Z      ROT.   X          Y          Z

JOINT FORCE ASSUMPTIONS ------------------------------------------------------------------------------------------------/

JOINT      THETA  1        2        3     FORCE X          Y          Z      MOMENT X          Y          Z
NO ASSUMPTIONS GIVEN FOR THIS LOADING


MEMBER FORCE ASSUMPTIONS ----------------------/    ----------------------------------/

MEMBER       COMPONENT   DISTANCE     VALUE         COMPONENT   DISTANCE     VALUE
NO ASSUMPTIONS GIVEN FOR THIS LOADING
```

LOADING - 3 TEMPERATURE LOADS 20 PERCENT DIFFERENTIAL STATUS - ACTIVE

MEMBER AND ELEMENT LOADS----------/

MEMBER/ELEMENT												
1	TEMPERATURE LOAD	LA	0.0	LB	1.000	AXIAL	0.900	BENDING	Y	0.0	Z	-0.200
2	TEMPERATURE LOAD	LA	0.0	LB	1.000	AXIAL	0.900	BENDING	Y	0.0	Z	-0.200
3	TEMPERATURE LOAD	LA	0.0	LB	1.000	AXIAL	0.900	BENDING	Y	0.0	Z	-0.200
4	TEMPERATURE LOAD	LA	0.0	LB	1.000	AXIAL	0.900	BENDING	Y	0.0	Z	-0.200
5	TEMPERATURE LOAD	LA	0.0	LB	1.000	AXIAL	0.900	BENDING	Y	0.0	Z	-0.200
6	TEMPERATURE LOAD	LA	0.0	LB	1.000	AXIAL	0.800	BENDING	Y	0.0	Z	0.0
7	TEMPERATURE LOAD	LA	0.0	LB	1.000	AXIAL	0.800	BENDING	Y	0.0	Z	0.0
8	TEMPERATURE LOAD	LA	0.0	LB	1.000	AXIAL	0.800	BENDING	Y	0.0	Z	0.0
9	TEMPERATURE LOAD	LA	0.0	LB	1.000	AXIAL	0.800	BENDING	Y	0.0	Z	0.0

JOINT LOADS----------/ ----------/

JOINT	STEP	FORCE X	Y	Z	MOMENT X	Y	Z

JOINT DISPLACEMENTS----------/ ----------/

JOINT	STEP	DISP X	Y	Z	ROT. X	Y	Z

JOINT FORCE ASSUMPTIONS ----------/

JOINT	THETA	1	2	3	FORCE X	Y	Z	MOMENT X	Y	Z

NO ASSUMPTIONS GIVEN FOR THIS LOADING

MEMBER FORCE ASSUMPTIONS ----------/ ----------/

MEMBER	COMPONENT	DISTANCE	VALUE	COMPONENT	DISTANCE	VALUE

NO ASSUMPTIONS GIVEN FOR THIS LOADING

****
* END OF DATA FROM INTERNAL STORAGE *
****

STIFFNESS ANALYSIS $ 148 25 0990

LIST FORCES REACTIONS DISPLACEMENTS $ 148 25 1000

****
RESULTS OF LATEST ANALYSES
****

PROBLEM - PROB 5.5 TITLE - SUMMIT RD SEP. R. A. DOKKEN

ACTIVE UNITS FEET KIP DEG DEGF SEC

ACTIVE STRUCTURE TYPE SPACE FRAME

ACTIVE COORDINATE AXES X Y Z

LOADING - 1 DEAD LOAD

MEMBER FORCES

MEMBER	JOINT	FORCE			MOMENT		
		AXIAL	SHEAR Y	SHEAR Z	TORSIONAL	BENDING Y	BENDING Z
1	1	-21.0821838	124.1430511	-8.5110025	326.8664551	-1.1459513	-444.7841797
1	2	9.8623266	470.0024414	8.5111980	-326.8664551	497.0056152	-9460.3593750
2	2	824.9543457	642.2348633	1.2956495	-17.5619659	-207.3522034	14112.8906250
2	3	-829.0344238	-428.0349121	-1.2955790	17.5619659	180.1393738	-2895.0739746
3	3	830.6259766	328.8437500	1.2955465	-17.3905182	-180.1559601	2895.0739746
3	4	-843.8020020	329.9555664	-1.2953300	17.3905182	63.5432587	-2945.1394043
4	4	845.3925781	-430.7395020	1.2952976	-17.4509277	-63.5267029	2945.1406250
4	5	-849.4729004	644.9394531	-1.2952271	17.4509277	36.3212585	-14219.7656250
5	5	-90.8106079	464.6643066	-6.1763897	858.2387695	384.4604492	9053.9609375
5	6	79.5909271	28.9690247	6.1765499	-858.2387695	-85.4700165	1374.4724121
6	7	228.1936035	29.0999756	-25.9222870	20.1540527	-286.3222656	0.0000000
6	1	-122.5061035	-21.3164368	21.5935974	-20.1540527	501.2985840	230.1488647
7	8	1771.4548340	-73.1128693	51.8816223	117.8094635	-325.8454590	-700.8686523
7	2	-1535.4978027	173.5452271	-107.7355499	-117.8094635	-2640.8820801	-3854.9245605
8	9	1756.9887695	-165.7810364	107.8384857	287.9553223	-290.4702148	-521.1293945
8	5	-1585.1657715	235.2230377	-146.4576111	-287.9553223	-2781.7153320	-4318.2109375
9	10	134.8625488	72.8913574	-54.6969757	9.3285446	-969.0876465	-0.0000000
9	6	-20.8777618	-65.1088867	50.3688660	-9.3285446	1477.9409180	669.8166504

RESULTANT JOINT LOADS - SUPPORTS

JOINT	FORCE			MOMENT		
	X FORCE	Y FORCE	Z FORCE	X MOMENT	Y MOMENT	Z MOMENT
7	-18.7345123	230.5811615	-8.5111237	251.0378265	-0.9293541	-139.1612396
8	855.7702637	1553.5937500	9.8064795	1.3522234	130.3804016	-770.8896484
9	-916.5446777	1511.9147949	-13.6700687	-121.3821564	261.1228027	596.6142578
10	79.5088043	141.4851074	12.3746080	-845.0805664	-56.6647797	471.0056152

RESULTANT JOINT DISPLACEMENTS - SUPPORTS

JOINT	DISPLACEMENT			ROTATION		
	X DISP.	Y DISP.	Z DISP.	X ROT.	Y ROT.	Z ROT.
7	0.0	0.0	0.0	0.0	0.0	0.0
8	0.0	0.0	0.0	0.0	0.0	0.0
9	0.0	0.0	0.0	0.0	0.0	0.0
10	0.0	0.0	0.0	0.0	0.0	0.0

RESULTANT JOINT DISPLACEMENTS - FREE JOINTS

JOINT	DISPLACEMENT			ROTATION		
	X DISP.	Y DISP.	Z DISP.	X ROT.	Y ROT.	Z ROT.
1	0.0022081	-0.0002447	-0.0012389	-0.0042709	-0.0012219	-0.0073887
2	0.0021514	-0.0049726	-0.0000061	-0.0116072	-0.0008164	-0.0407499
3	0.0009433	-0.0356486	0.0003601	-0.0114636	-0.0007437	-0.1148081
4	-0.0040207	-0.0345825	0.0015020	0.0144929	-0.0008385	0.1150866
5	-0.0040755	-0.0039090	0.0017043	0.0146346	-0.0008217	0.0402938
6	-0.0038828	-0.0003351	0.0021815	0.0015150	-0.0006676	0.0023555

LOADING - 2 EARTH PRESSURE AT ABUTMENTS

MEMBER FORCES

MEMBER	JOINT	FORCE			MOMENT		
		AXIAL	SHEAR Y	SHEAR Z	TORSIONAL	BENDING Y	BENDING Z
1	1	-29.6603394	6.9155302	0.8396010	18.2666931	-5.5980921	220.6708679
1	2	29.6603394	-6.9155302	-0.8396010	-18.2666931	-43.3173676	182.2304535
2	2	-14.8232603	2.8781176	1.2716618	-0.3858062	39.3569031	174.3977966
2	3	14.8232603	-2.8781176	-1.2716618	0.3858062	-66.0666504	-113.9463806
3	3	-14.8259907	2.8640089	1.2716618	-0.4486809	66.0662384	113.9462280
3	4	14.8259907	-2.8640089	-1.2716618	0.4486809	-180.5386200	143.8659668
4	4	-14.8232641	2.8781033	1.2716618	-0.2770392	180.5389557	-143.8659668
4	5	14.8232641	-2.8781033	-1.2716618	0.2770392	-207.2487030	204.3171234
5	5	39.9524384	14.0402451	-5.4153509	64.3106079	264.7717285	454.8400879
5	6	-39.9524384	-14.0402451	5.4153509	-64.3106079	-2.6255932	224.8199463
6	7	4.9686747	-91.2281799	-13.8703737	-4.4009151	214.8874512	-0.0000000
6	1	-4.9686747	-26.6681519	13.8703737	4.4009151	-91.0035553	-201.8903656
7	8	2.5834570	-13.0370693	7.7447529	-11.4390182	-112.2631378	-198.9252014
7	2	-2.5834570	13.0370693	-7.7447529	11.4390182	-186.6580353	-304.2612305
8	9	-14.1737919	49.2686157	-23.3367157	37.7591705	291.1508789	594.8061523
8	5	14.1737919	-49.2686157	23.3367157	-37.7591705	277.0659180	604.8168945
9	10	-9.9297953	89.7207336	18.1582947	5.1941347	-352.5275879	0.0000000
9	6	9.9297953	37.3406830	-18.1582947	-5.1941347	177.6765442	151.9569024

RESULTANT JOINT LOADS - SUPPORTS

JOINT	FORCE			MOMENT		
	X FORCE	Y FORCE	Z FORCE	X MOMENT	Y MOMENT	Z MOMENT
7	73.1461792	-1.1777086	-56.4615326	-187.5054932	11.3844938	104.4417419
8	14.7587252	-4.3144093	9.4320620	-3.7249680	-10.9093952	-228.4124908
9	55.3254852	9.9688740	-3.5510759	-47.2938080	19.7305450	-661.3344727
10	70.1472931	-4.4798079	-59.4762878	-307.5573730	-18.8179016	171.3389893

RESULTANT JOINT DISPLACEMENTS - SUPPORTS

JOINT	DISPLACEMENT			ROTATION		
	X DISP.	Y DISP.	Z DISP.	X ROT.	Y ROT.	Z ROT.
7	0.0	0.0	0.0	0.0	0.0	0.0
8	0.0	0.0	0.0	0.0	0.0	0.0
9	0.0	0.0	0.0	0.0	0.0	0.0
10	0.0	0.0	0.0	0.0	0.0	0.0

RESULTANT JOINT DISPLACEMENTS - FREE JOINTS

JOINT	DISPLACEMENT			ROTATION		
	X DISP.	Y DISP.	Z DISP.	X ROT.	Y ROT.	Z ROT.
1	-0.0019506	0.0001629	0.0010906	0.0012294	0.0002418	0.0021314
2	-0.0018745	0.0009069	0.0008270	0.0008188	0.0002294	0.0011906
3	-0.0018598	0.0010950	0.0007406	0.0008215	0.0002087	-0.0001754
4	-0.0018270	-0.0016835	0.0006719	0.0014824	-0.0002337	0.0015257
5	-0.0017993	-0.0008150	0.0007609	0.0014832	-0.0003093	0.0031799
6	-0.0018762	-0.0001433	0.0010503	0.0004681	-0.0004010	0.0007187

LOADING - 3 TEMPERATURE LOADS 20 PERCENT DIFFERENTIAL

MEMBER FORCES

MEMBER	JOINT	FORCE			MOMENT		
		AXIAL	SHEAR Y	SHEAR Z	TORSIONAL	BENDING Y	BENDING Z
1	1	866.3632813	186.7887878	-22.8058777	1726.6076660	-283.8466797	6757.6484375
1	2	-866.3632813	-186.7887878	22.8058777	-1726.6076660	1612.5263672	4124.7343750
2	2	1027.7648926	20.2789154	10.8857679	33.8104095	-1379.4606934	950.2690430
2	3	-1027.7648926	-20.2789154	-10.8857679	-33.8104095	1150.8181152	-524.3344727
3	3	1027.7446289	21.2570038	10.8857679	34.9055939	-1150.7851562	524.3330078
3	4	-1027.7446289	-21.2570038	-10.8857679	-34.9055939	170.8705444	1389.1801758
4	4	1027.7646484	20.2799072	10.8857679	34.7431488	-170.9037170	-1389.1818848
4	5	-1027.7646484	-20.2799072	-10.8857679	-34.7431488	-57.7388306	1815.1369629
5	5	653.7556152	-319.5307617	13.6388855	-321.3461914	-573.2285156	-9407.9296875
5	6	-653.7556152	319.5307617	-13.6388855	321.3461914	-87.0026550	-6059.9101562
6	7	242.8295441	-755.9931641	394.3395996	-170.8938751	-1759.5595703	0.0000000
6	1	-242.8295441	755.9931641	-394.3395996	170.8938751	-1762.5048828	-6752.1875000
7	8	-83.2811737	-172.8837280	134.6981049	-501.0192871	-1304.3549805	-3031.5886230
7	2	83.2811737	172.8837280	-134.6981049	501.0192871	-3894.5378418	-3641.1391602
8	9	-142.6205444	-453.6545410	191.8834229	-716.4040527	-925.9624023	-4443.9687500
8	5	142.6205444	453.6545410	-191.8834229	716.4040527	-3746.1352539	-6601.8984375
9	10	383.3947754	-506.8159180	354.7226563	-155.3641357	188.7578735	0.0
9	6	-383.3947754	506.8159180	-354.7226563	155.3641357	-3604.4777832	-4880.2656250

RESULTANT JOINT LOADS - SUPPORTS

JOINT	FORCE			MOMENT		
	X FORCE	Y FORCE	Z FORCE	X MOMENT	Y MOMENT	Z MOMENT
7	869.7358398	170.3979187	-22.8052216	1517.9719238	-299.4194570	-855.1987305
8	158.2287903	-169.6958618	33.6916962	-519.2194824	-304.4050293	-3283.3891602
9	-384.6384277	-335.0053711	52.7947388	1526.6279297	-83.3213959	4333.8164062
10	-643.3261719	334.3034668	-63.6795044	176.5633240	-142.0435791	-91.7419891

RESULTANT JOINT DISPLACEMENTS - SUPPORTS

JOINT	DISPLACEMENT			ROTATION		
	X DISP.	Y DISP.	Z DISP.	X ROT.	Y ROT.	Z ROT.
7	0.0	0.0	0.0	0.0	0.0	0.0
8	0.0	0.0	0.0	0.0	0.0	0.0
9	0.0	0.0	0.0	0.0	0.0	0.0
10	0.0	0.0	0.0	0.0	0.0	0.0

RESULTANT JOINT DISPLACEMENTS - FREE JOINTS

JOINT	DISPLACEMENT			ROTATION		
	X DISP.	Y DISP.	Z DISP.	X ROT.	Y ROT.	Z ROT.
1	-0.0509723	0.0072335	0.0285762	0.0775337	0.0068787	0.1379592
2	-0.0248158	0.0303115	0.0196937	0.0387735	0.0086295	0.0326714
3	-0.0156403	0.0315990	0.0161679	0.0385091	0.0091272	0.0035021
4	-0.0050771	0.0149179	-0.0016324	-0.0135268	0.0124686	0.0117989
5	0.0040432	0.0133086	-0.0061148	-0.0138077	0.0124964	0.0059583
6	0.0263442	0.0051789	-0.0148449	-0.0065736	0.0125758	-0.0096709

```
LOADING COMBINATION 4                          $ 14B 25    1010
COMBINE 4  1 1.0 2 1.0 3 1.0                   $ 14B 25    1020
LOAD LIST 4                                    $ 14B 25    1025
LIST FORCES REACTIONS DISPLACEMENTS            $ 14B 25    1030
```

****
RESULTS OF LATEST ANALYSES
****

PROBLEM - PROB 5.5 TITLE - SUMMIT RD SEP. R. A. DOKKEN

ACTIVE UNITS FEET KIP DEG DEGF SEC

ACTIVE STRUCTURE TYPE SPACE FRAME

ACTIVE COORDINATE AXES X Y Z

LOADING - 4

MEMBER FORCES

MEMBER	JOINT	FORCE			MOMENT		
		AXIAL	SHEAR Y	SHEAR Z	TORSIONAL	BENDING Y	BENDING Z
1	1	815.6208496	317.8471680	-30.4772797	2071.7407227	-290.5908203	6533.5312500
1	2	-826.8405762	276.2980957	30.4774780	-2071.7407227	2066.2141113	-5153.3945312
2	2	1837.8957520	665.3918457	13.4530764	15.8626375	-1547.4555664	15237.5546875
2	3	-1841.9758301	-451.1918945	-13.4530067	-15.8626375	1264.8908691	-3533.3525391
3	3	1943.5446777	352.9645996	13.4529753	17.0664062	-1264.8747559	3533.3525391
3	4	-1856.7207031	305.8344727	-13.4527607	-17.0664062	53.8752289	-1412.0915527
4	4	1858.3337402	-407.5815430	13.4527254	17.0151825	-53.8914795	1412.0915527
4	5	-1862.4138184	621.7812500	-13.4526548	-17.0151825	-228.6661987	-12200.3085937
5	5	602.8974609	159.1737366	2.0471439	601.2031250	76.0040588	100.8719788
5	6	-614.1171875	334.4594727	-2.0469837	-601.2031250	-175.0982056	-4460.6171875
6	7	475.9916992	-818.1213379	354.5468750	-155.1407166	-1830.9941406	0.0000000
6	1	-370.3041992	768.0085449	-358.8757324	155.1407166	-1352.2097168	-6723.9296875
7	8	1690.7558594	-259.0334473	194.3244781	-394.6489258	-1742.4636230	-3931.3818359
7	2	-1454.7988281	359.4658203	-250.1784058	394.6489258	-6722.0742187	-7800.3242187
8	9	1600.1938477	-570.1669922	276.3850098	-390.6894531	-925.2817383	-4370.2929687
8	5	-1428.3708496	639.6091309	-315.0041504	390.6894531	-6250.7812500	-10315.2929687
9	10	508.3276367	-344.2038574	318.1840820	-140.8413849	-1132.8574219	-0.0000000
9	6	-394.3427734	479.0476074	-322.5122070	140.8413849	-1948.8608398	-4058.4912109

RESULTANT JOINT LOADS - SUPPORTS

JOINT	FORCE			MOMENT		
	X FORCE	Y FORCE	Z FORCE	X MOMENT	Y MOMENT	Z MOMENT
7	924.1474609	399.8012695	-87.7778625	1581.5039062	-288.9631348	-899.9182129
8	1028.7578125	1379.5827637	43.9302368	-521.5920410	-184.9341583	-4282.6875000
9	-1245.8566895	1186.8767090	35.5735931	1357.9519043	197.5319061	4269.0976562
10	-493.6699219	471.3085938	-110.7811737	-976.0747070	-217.5262451	550.6025391

RESULTANT JOINT DISPLACEMENTS - SUPPORTS

JOINT	DISPLACEMENT			ROTATION		
	X DISP.	Y DISP.	Z DISP.	X ROT.	Y ROT.	Z ROT.
7	0.0	0.0	0.0	0.0	0.0	0.0
8	0.0	0.0	0.0	0.0	0.0	0.0
9	0.0	0.0	0.0	0.0	0.0	0.0
10	0.0	0.0	0.0	0.0	0.0	0.0

RESULTANT JOINT DISPLACEMENTS - FREE JOINTS

JOINT	DISPLACEMENT			ROTATION		
	X DISP.	Y DISP.	Z DISP.	X ROT.	Y ROT.	Z ROT.
1	-0.0507148	0.0071517	0.0284279	0.0744922	0.0058987	0.1327019
2	-0.0245389	0.0262458	0.0205146	0.0279850	0.0080425	-0.0069879
3	-0.0165567	-0.0029547	0.0172686	0.0278670	0.0085923	-0.1114814
4	-0.0109249	-0.0213482	0.0005415	0.0024485	0.0113963	0.1284112
5	-0.0018316	0.0085846	-0.0036497	0.0023101	0.0113654	0.0494321
6	0.0205853	0.0047005	-0.0116131	-0.0045904	0.0115072	-0.0065967

5.6 Structure on Elastic Supports

This problem illustrates the joint release capabilities of STRUDL. Although the problem may be analyzed as a plane frame, it is deliberately rotated in the X - Z plane and analyzed as a space frame so that the use of angle specs for the joint release command can be illustrated. The use of elastic supports is also illustrated in this problem.

The structure analyzed in this problem is shown in Figure 5.6a (Ref. 5.4)

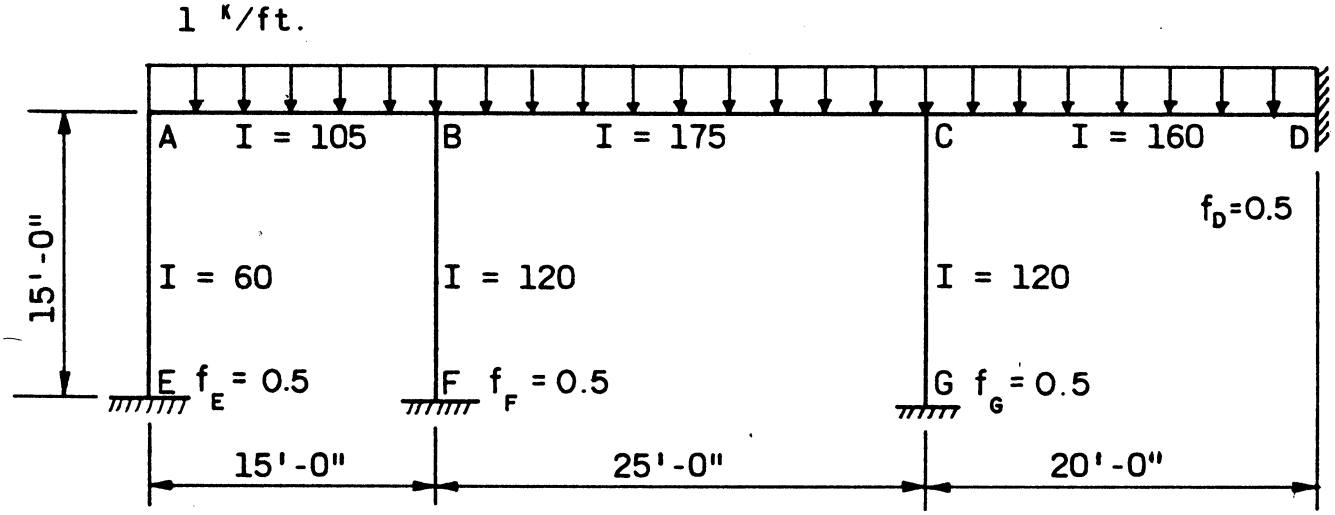

Fig. 5.6a

This frame is analyzed as if it were oriented at a 45 degree angle between the X and Z axes in the XZ plane as shown in Figure 5.6b below. Notice that the rotational constraints of the supports are given by the fixity factors, f, (i.e., the degree of constraint, 1.0 being absolutly fixed) in this problem. These are converted to equivalent spring constants by the following formula:

$$K = \frac{4EI}{L} \quad \frac{(f)}{(1-f)}$$

where E, I, and L are taken from the member to which the fixity applies. For example, the spring constant at joint E, where the units are kips, radians and inches, is calculated below using a fixity factor of 1/2.

$$KMZ = \frac{4(.001)(60)}{15(12)} \quad \frac{(.5)}{1-.5)} = .001333$$

The following sketch shows how the structure was modeled.

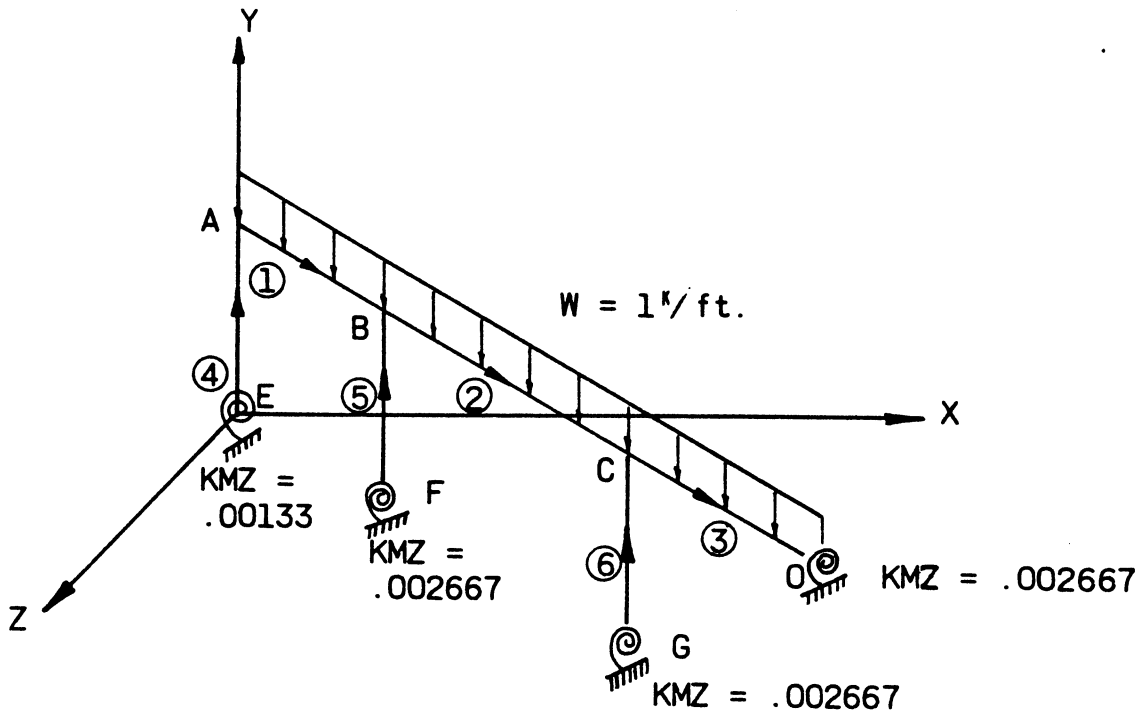

Fig. 5.6b

The commands shown on lines 10 thru 180 are used to initiate the STRUDL system and describe the geometry and topology of the structure.

STATE OF CALIFORNIA - BUSINESS AND TRANSPORTATION AGENCY - DEPARTMENT OF PUBLIC WORKS - DIVISION OF ADMINISTRATIVE SERVICES

COMPUTER SYSTEMS

ICES

b	b	ADDRESS DIST.	GROUP	BATCH
$		14	T	15

SUBSYSTEM NAME	b	b	SOURCE DIST. UNIT	CHARGE DIST. UNIT	EXPENDITURE AUTHORIZATION	SPECIAL DESIGNATION WHEN APPLICABLE	b	SEQUENCE
	$							ØØØ1

STRUDL 'PRŌB 5.6' 'ELASTICALLY RESTRAINED SUPPŌRTS'							10
TYPE SPACE FRAME							20
UNITS FEET							30
JŌINT CŌŌRDINATES							40
	'A'	0.0000	15.0000	0.0000			50
	'B'	10.6066	15.0000	10.6066			60
	'C'	28.2843	15.0000	28.2843			70
	'D'	42.4264	15.0000	42.4264	S		80
	'E'	0.0000	0.0000	0.0000	S		90
	'F'	10.6066	0.0000	10.6066	S		100
	'G'	28.2843	0.0000	28.2843	S		110
MEMBER INCIDENCES							120
	1	'A'	'B'				130
	2	'B'	'C'				140
	3	'C'	'D'				150
	4	'E'	'A'				160
	5	'F'	'B'				170
	6	'G'	'C'				180

Member properties are given in the following input commands. Notice that the local Y and Z coordinates of the column members are oriented at a BETA angle of 135 degrees.

```
UNITS INCHES KIPS                                                    190
MEMBER PROPERTIES PRISMATIC AX 100. IX 100.0 IY 100.                 200
       1    IZ 105.                                                  210
       2    IZ 175.                                                  220
       3    IZ 160.                                                  230
       4    IZ 60.                                                   240
       5 6  IZ 120.                                                  250
UNITS DEGREES                                                        260
CONSTANTS                                                            270
       BETA 135. 4 5 6                                               280
```

The sketch shown in Figure 5.6c below illustrates the determination of the BETA angle of 135 degrees for the three column members. Note, that the local X axis is parallel to the global Y axis, thus the reference position (i.e., BETA = 0), is established by orienting the local Z axis parallel to the global Z axis.

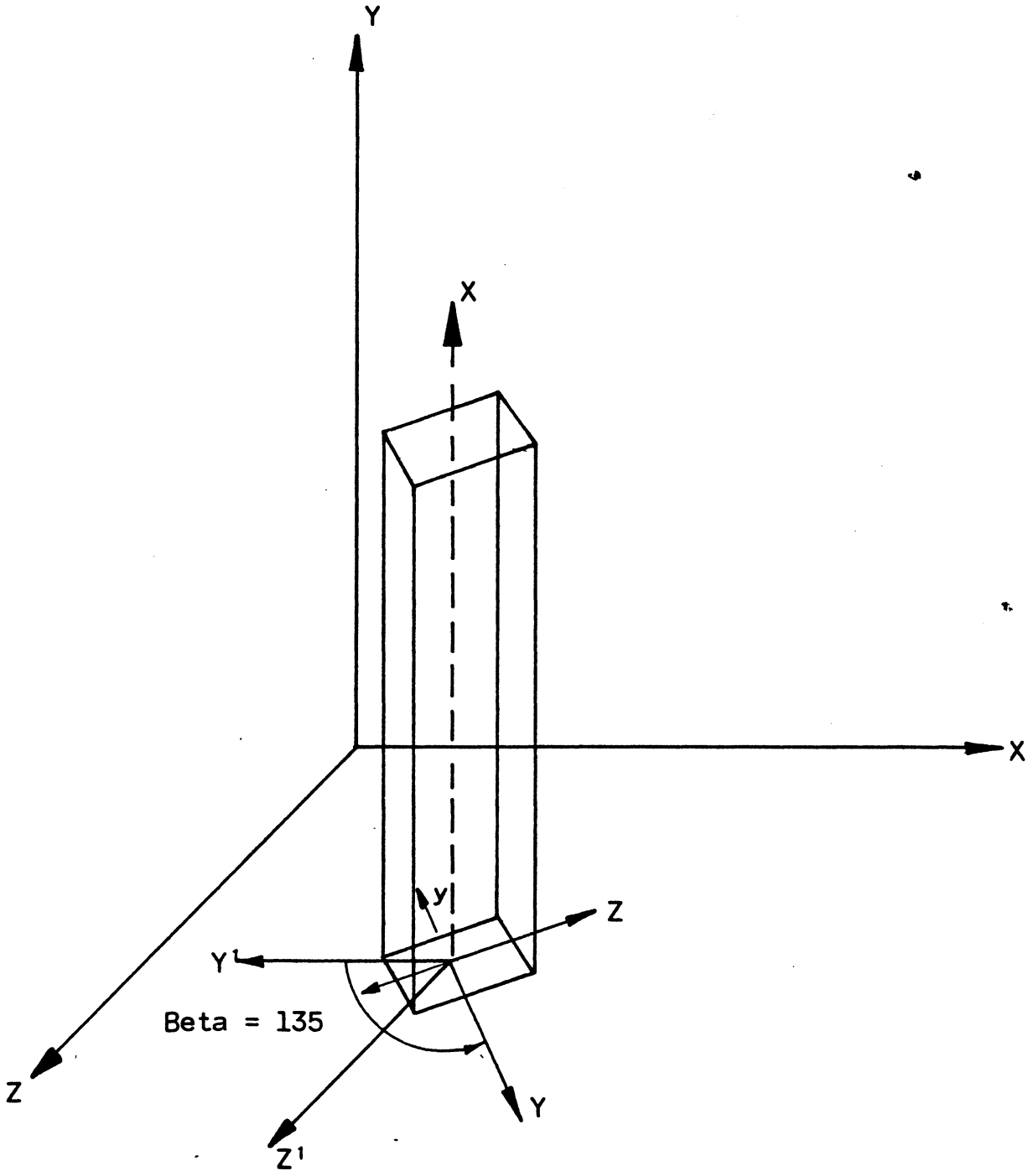

Fig. 5.6c

The joint release commands are used to specify the condition at the supports. Since the joint releases must be given in the global axes, it is necessary to reorient the release directions in the case of rotated or skewed joints. This is done by specifying the angles TH1, TH2, and TH3 according to the sign convention shown in Figure 5.6d.

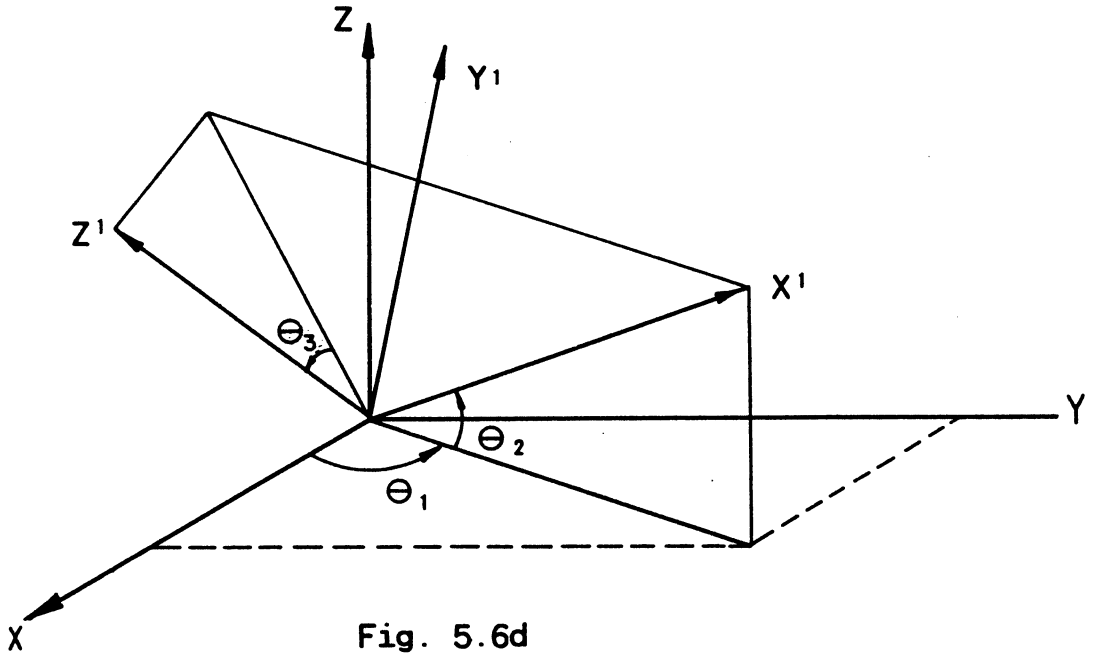

Fig. 5.6d

In order that the orientation of the joint releases in this problem be correct, it is necessary to specify a TH2 of 45 degrees (.7854 radians) as can be seen in the following sketch.

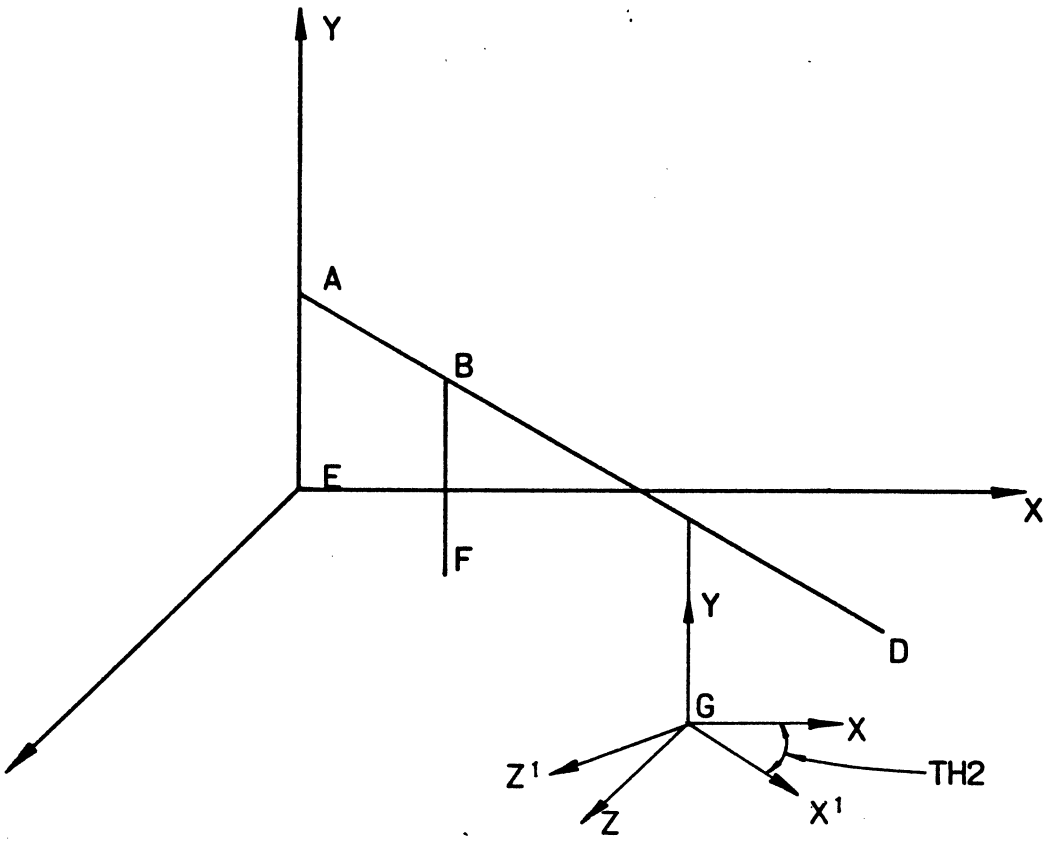

Fig. 5.6e

Care should be taken in maintaining consistent units when specifying spring constants. Notice also that the theta angles are specified in radians. The following input shows the commands necessary to specify joint conditions.

```
UNITS RADIANS INCHES KIPS                                          290
JOINT RELEASES                                                     300
    'D' 'A' 'G' TH2 .7854 KMZ .002667                              310
    'E' TH2 .7854 KMZ .001333                                      320
```

Structural loading and analysis is done in the usual manner as shown in the input which follows.

```
UNITS KIPS FEET                                                    350
LOADING 1 'UNIFORM LOADING'                                        360
MEMBER 1 2 3 LOAD FORCE Y UNIFORM -1.0                             370
LOADING LIST ALL                                                   380
STIFFNESS ANALYSIS                                                 390
LIST FORCES REACTIONS LOADS DISTORTIONS DISPLACEMENTS              400
```

An output listing is attached to show the results that may be expected from the STRUDL commands shown above. The first results shown indicate the individual member forces resulting from the applied loads. The forces are reported for each joint in each members local axis directions. The second block of output results lists the member distortions for each member analyzed. The values shown represent the relative displacements between the joints at the member ends, in local member coordinates. The large values shown are a result of not specifying the constant E for the analysis. The constant assumed for the analysis is 1 and the final distortions of the members may be found by dividing by the appropriate Young's Modulus of Elasticity.

The next block of output listed as RESULTANT JOINT LOADS - SUPPORTS are the reactions at the support joints due to the applied loadings. The direction of the results is in the global axes directions. Results may be compared with member end results when the forces have been properly resolved. The RESULTANT JOINT LOADS - FREE JOINTS are the back substituted joint loads on the free joints. The loads may be compared with the applied loads to determine the accuracy of the analysis.

The RESULTANT JOINT DISPLACEMENTS both SUPPORTS AND FREE JOINTS indicate the movements of the joint itself. These results may also be adjusted for the proper Young's Modulus of Elasticity.

```
STRUDL 'PROB 5.6' 'ELASTICALLY RESTRAINED SUPPORTS                  $ 14T 15    0010

          ************************************************
          *                                              *
          *     ICES STRUDL II      VERSION 1 MOD 1      *
          *       THE STRUCTURAL DESIGN LANGUAGE         *
          *    MASSACHUSETTS INSTITUTE OF TECHNOLOGY     *
          *             STATE OF CALIFORNIA              *
          *     BRIDGE DEPARTMENT DIVISION OF HWYS.      *
          *    SPECIAL STUDIES SECTION  PH. 445-6519     *
          *     NOVEMBER 1969  INSTALLED APRIL 1970      *
          *           18:01:09       7/28/70             *
          *                                              *
          ************************************************

TYPE SPACE FRAME                                                    $ 14T 15    0020

UNITS FEET                                                          $ 14T 15    0030

JOINT COORDINATES                                                   $ 14T 15    0040

     'A'  0.0000 15.0000  0.0000                                    $ 14T 15    0050

     'B' 10.6066 15.0000 10.6066                                    $ 14T 15    0060

     'C' 28.2843 15.0000 28.2843                                    $ 14T 15    0070

     'D' 42.4264 15.0000 42.4264 S                                  $ 14T 15    0080

     'E'  0.0000  0.0000  0.0000 S                                  $ 14T 15    0090

     'F' 10.6066  0.0000 10.6066 S                                  $ 14T 15    0100

     'G' 28.2843  0.0000 28.2843 S                                  $ 14T 15    0110

MEMBER INCIDENCES                                                   $ 14T 15    0120

      1 'A' 'B'                                                     $ 14T 15    0130

      2 'B' 'C'                                                     $ 14T 15    0140

      3 'C' 'D'                                                     $ 14T 15    0150

      4 'E' 'A'                                                     $ 14T 15    0160

      5 'F' 'B'                                                     $ 14T 15    0170

      6 'G' 'C'                                                     $ 14T 15    0180

UNITS INCHES KIPS                                                   $ 14T 15    0190

MEMBER PROPERTIES PRISMATIC AX 100. IX 100.0 IY 100.                $ 14T 15    0200

     1    IZ 105.                                                   $ 14T 15    0210

     2    IZ 175.                                                   $ 14T 15    0220

     3    IZ 160.                                                   $ 14T 15    0230

     4    IZ  60.                                                   $ 14T 15    0240

     5 6  IZ 120.                                                   $ 14T 15    0250
```

```
UNITS DEGREES                                                    $ 14T 15    0260
CONSTANTS                                                        $ 14T 15    0270
     BETA 135. 4 5 6                                             $ 14T 15    0280
UNITS RADIANS INCHES KIPS                                        $ 14T 15    0290
JOINT RELEASES                                                   $ 14T 15    0300
    'D' 'F' 'G' TH2 .7854 KMZ .002667                            $ 14T 15    0310
    'E' TH2 .7854 KMZ .001333                                    $ 14T 15    0320
UNITS KIPS FEET                                                  $ 14T 15    0350
LOADING 1 'UNIFORM LOADING'                                      $ 14T 15    0360
MEMBER 1 2 3 LOAD FORCE Y UNIFORM -1.0                           $ 14T 15    0370
LOADING LIST ALL                                                 $ 14T 15    0380
STIFFNESS ANALYSIS                                               $ 14T 15    0390
LIST FORCES REACTIONS LOADS DISTORTIONS DISPLACEMENTS            $ 14T 15    0400
```

****
RESULTS OF LATEST ANALYSES
****

PROBLEM - PROB 5.6 TITLE - NONE GIVEN

ACTIVE UNITS FEET KIP RAD DEGF SEC

ACTIVE STRUCTURE TYPE SPACE FRAME

ACTIVE COORDINATE AXES X Y Z

LOADING - 1 UNIFORM LOADING

MEMBER FORCES

MEMBER	JOINT	FORCE			MOMENT		
		AXIAL	SHEAR Y	SHEAR Z	TORSIONAL	BENDING Y	BENDING Z
1	A	0.3867038	5.5529795	0.0000000	0.0000003	0.0000000	4.5130053
1	B	-0.3867038	9.4470062	-0.0000000	-0.0000003	-0.0000003	-33.7181854
2	B	1.2856178	12.1845999	-0.0000000	-0.0000001	0.0000004	44.2077789
2	C	-1.2856173	12.8153896	0.0000000	0.0000001	0.0000003	-52.0926514
3	C	0.8366064	11.5826197	-0.0000000	0.0000015	-0.0000002	46.8550873
3	D	-0.8366064	8.4173346	0.0000000	-0.0000015	0.0000003	-15.2023973
4	E	5.5529795	0.3867038	0.0000003	0.0000000	-0.0000007	1.2875547
4	A	-5.5529795	-0.3867038	-0.0000003	-0.0000000	-0.0000045	4.5130033
5	F	21.6316071	0.3989152	0.0000009	0.0000001	-0.0000038	2.9940948
5	B	-21.6316071	-0.3989152	-0.0000009	-0.0000001	-0.0000094	10.4896326
6	G	24.3979950	-0.4490129	-0.0000004	0.0000001	0.0000032	-1.4975986
6	C	-24.3979950	0.4490129	0.0000004	-0.0000001	0.0000033	-5.2375965

MEMBER DISTORTIONS

MEMBER	DISTORTION			ROTATION		
	AXIAL	SHEAR Y	SHEAR Z	TORSION	BENDING Y	BENDING Z
1	-53.0055542	694595.3125000	0.0191406	-0.0145404	-0.0035010	-7520.9375000
2	-321.4045410	1349288.0000000	0.0733457	-0.0049674	-0.0017995	80909.7500000
3	-167.3208771	-534771.4125000	-0.0616562	-0.1062574	0.0069360	41480.6250000
4	-832.9465332	17441C.2500000	0.1691201	-0.0016355	-0.0409628	58058.0820312
5	-3244.7397461	202564.9375000	0.1004221	-0.0051366	-0.0608121	67459.8125000
6	-3659.6992187	-100967.9375000	0.1666791	-0.0069360	0.0012896	-33659.9921875

RESULTANT JOINT LOADS - SUPPORTS

JOINT	FORCE			MOMENT		
	X FORCE	Y FORCE	Z FORCE	X MOMENT	Y MOMENT	Z MOMENT
D	-0.5915700	8.4173346	-0.5915700	10.7497177	0.0000003	-10.7497177
E	0.2734409	5.5529795	0.2734409	0.9104397	0.0000000	-0.9104391
F	0.6356291	21.6316071	0.6356291	2.1171446	0.0000001	-2.1171455
G	-0.3175002	24.3979950	-0.3175002	-1.0589609	0.0000001	1.0589628

RESULTANT JOINT LOADS - FREE JOINTS

JOINT	FORCE			MOMENT		
	X FORCE	Y FORCE	Z FORCE	X MOMENT	Y MOMENT	Z MOMENT
A	-0.0000000	0.0000000	-0.0000000	-0.0000006	0.0000000	0.0000006
B	0.0000000	0.0000000	0.0000000	-0.0000003	-0.0000000	0.0000003
C	-0.0000000	0.0000000	-0.0000000	0.0000014	0.0000000	-0.0000014

RESULTANT JOINT DISPLACEMENTS - SUPPORTS

JOINT	DISPLACEMENT			ROTATION		
	X DISP.	Y DISP.	Z DISP.	X ROT.	Y ROT.	Z ROT.
D	0.0	0.0	0.0	-48367.7890625	0.0	48367.6132812
E	0.0	0.0	0.0	-8196.0234375	0.0	8195.9921875
F	0.0	0.0	0.0	-9525.9804687	0.0	9525.9453125
G	0.0	0.0	0.0	4764.7421875	0.0	-4764.7265625

RESULTANT JOINT DISPLACEMENTS - FREE JOINTS

JOINT	DISPLACEMENT			ROTATION		
	X DISP.	Y DISP.	Z DISP.	X ROT.	Y ROT.	Z ROT.
A	385.8249512	-832.9465332	386.3688965	32857.2421875	-0.0016355	-32857.2539062
B	345.7778320	-3244.7397461	345.3835449	38175.3398437	-0.0051366	-38175.3710937
C	118.3682098	-3659.6992187	118.2592468	-19036.4804687	-0.0069360	19036.4570312

5.7 EXAMPLE SPACE FRAME PROBLEM

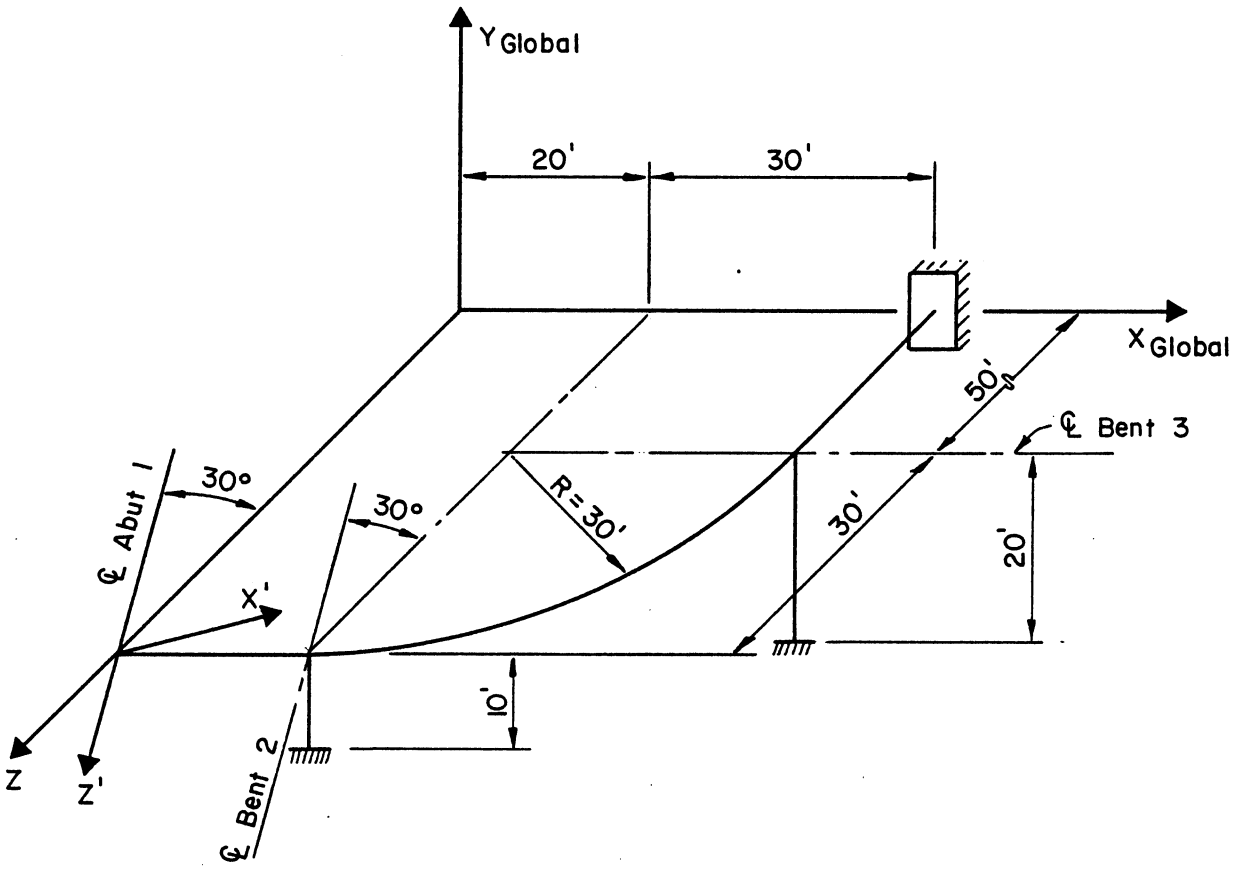

Using STRUDL determine the member forces, at the .2 points, in the superstructure of the POC structure shown above, for the following loading conditions:

1. Dead load of 2200 pounds per linear foot.
2. Live load force envelope for a live load of 85 pounds per square foot of sidewalk area.
3. Group II wind loads as follows:
   - i) Transverse - 200 pounds per foot of structure projected on a plane parallel to the global YZ plane and in the minus X global direction.
   - ii) Longitudinal - 48 pounds per foot of structure projected on a plane parallel to the global XY plane and in the minus Z global direction.

iii) Overturning - 200 pounds per foot applied at the right edge of the soffit.

Abutment 1 and Bent 2 are skewed 30 degrees as shown in the sketch. Assume that Abutment 1 is restrained from rotating about the X' axis and is free to rotate about the Z' axis. Abutment 1 is free to translate in both the X global and Z global directions.

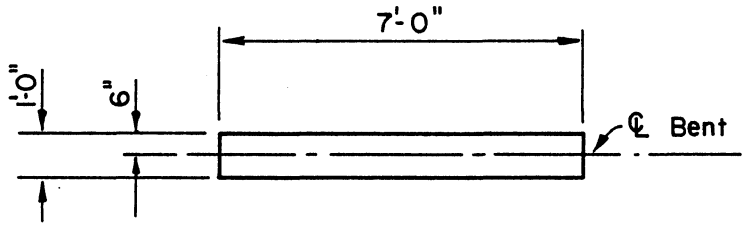

TYPICAL COLUMN SECTION

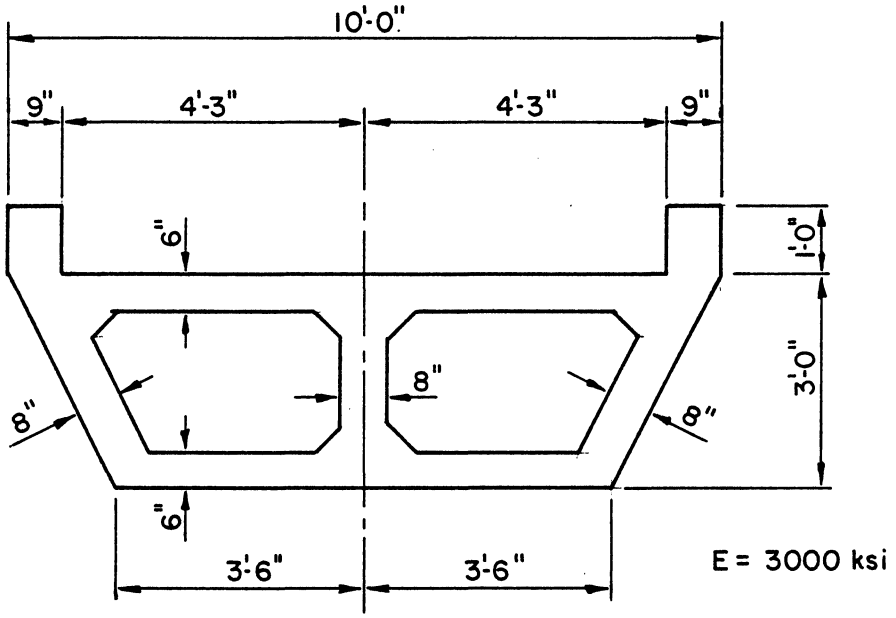

TYPICAL SECTION

The ICES/STRUDL coding for this problem is as follows:

```
STRUDL 'PROB 5.7' 'EXAMPLE SPACE FRAME PROBLEM'                    $ 14T 60    0010
$                                                                  $ 14T 60    0020
TYPE SPACE FRAME                                                   $ 14T 60    0030
UNITS KIPS FEET DEGREES                                            $ 14T 60    0040
JOINT COORDINATES                                                  $ 14T 60    0050
     1        0.       20.       80.        SUPPORT  $ ABUT 1    $ 14T 60    0060
     2       20.       20.       80.                 $ BENT 2    $ 14T 60    0070
     3       29.271    20.       78.532                          $ 14T 60    0080
     4       37.634    20.       74.271                          $ 14T 60    0090
     5       44.271    20.       67.634                          $ 14T 60    0100
     6       48.532    20.       59.271                          $ 14T 60    0110
     7       50.000    20.       50.000              $ BENT 3    $ 14T 60    0120
     8       50.000    20.        0.        SUPPORT  $ ABUT 4    $ 14T 60    0130
     9       20.000    10.       80.000     SUPPORT  $ BENT 2    $ 14T 60    0140
    10       50.000     0.       50.000     SUPPORT  $ BENT 3    $ 14T 60    0150
MEMBER INCIDENCES                                                  $ 14T 60    0160
     1    1    2                                                   $ 14T 60    0170
     2    2    3                                                   $ 14T 60    0180
     3    3    4                                                   $ 14T 60    0190
     4    4    5                                                   $ 14T 60    0200
     5    5    6                                                   $ 14T 60    0210
     6    6    7                                                   $ 14T 60    0220
     7    7    8                                                   $ 14T 60    0230
     8    9    2                                                   $ 14T 60    0240
     9   10    7                                                   $ 14T 60    0250
CONSTANTS                                                          $ 14T 60    0260
     E 432.E3 ALL                                                  $ 14T 60    0270
     BETA 30. 8  90. 9                                             $ 14T 60    0280
JOINT 1 RELEASE FORCE X Z MOMENT Z TH2 -30.                        $ 14T 60    0290
```

```
MEMBER PROPERTIES PRISMATIC                                          $ 14T 60    0320
     1 TO 7    AX  14.65 IX  38.43 IY 133.77 IZ  19.79              $ 14T 60    0330
     8 9       AX   7.00 IX   2.33 IY  28.58 IZ    .58              $ 14T 60    0340
LOADING 1 'DEAD LOAD'                                                $ 14T 60    0350
     MEMBER 1 TO 7 LOAD FORCE Y UNIFORM W -2.2                       $ 14T 60    0360
     MEMBER 8 9    LOAD FORCE X UNIFORM W -1.05                      $ 14T 60    0370
LOADING 2 'OVERTURNING'                                              $ 14T 60    0380
     MEMBER 1 TO 7 LOAD FORCE Y UNIFORM W  0.2                       $ 14T 60    0390
     MEMBER 1 TO 7 LOAD MOMENT X UNIFORM W -0.7                      $ 14T 60    0400
LOADING 3 'LIVE LOAD SPAN 1'                                         $ 14T 60    0410
     MEMBER 1 LOAD FORCE Y UNIFORM W -0.7225                         $ 14T 60    0420
LOADING 4 'LIVE LOAD SPAN 2'                                         $ 14T 60    0430
     MEMBER 2 TO 6 LOAD FORCE Y UNIFORM W -0.7225                    $ 14T 60    0440
LOADING 5 'LIVE LOAD SPAN 3'                                         $ 14T 60    0450
     MEMBER 7 LOAD FORCE Y UNIFORM W -0.7225                         $ 14T 60    0460
LOADING 6 'LIVE LOAD SPANS 1-2'                                      $ 14T 60    0470
     MEMBER 1 TO 6 LOAD FORCE Y UNIFORM W -0.7225                    $ 14T 60    0480
LOADING 7 'LIVE LOAD SPANS 2-3'                                      $ 14T 60    0490
     MEMBER 2 TO 7 LOAD FORCE Y UNIFORM W -0.7225                    $ 14T 60    0500
LOADING 8 'LIVE LOAD SPANS 1-3'                                      $ 14T 60    0510
     MEMBER 1 7 LOAD FORCE Y UNIFORM W -0.7225                       $ 14T 60    0520
LOADING 9 'LIVE LOAD ALL SPANS'                                      $ 14T 60    0530
     MEMBER 1 TO 7 LOAD FORCE Y UNIFORM W -0.7225                    $ 14T 60    0540
LOADING 10 'WIND LOAD TRANSVERSE'                                    $ 14T 60    0550
  MEMBERS 2 TO 7 LOAD FORCE X GLOBAL PROJECTED UNIFORM W -.200       $ 14T 60    0560
LOADING 11 'WIND LOAD LONGITUDINAL'                                  $ 14T 60    0570
  MEMBERS 1 TO 6 LOAD FORCE Z GLOBAL PROJECTED UNIFORM W -.048       $ 14T 60    0580
LOADING COMBINATION 12 COMBINE 2 1. 10 1. 11 1.                      $ 14T 60    0590
PRINT DATA                                                           $ 14T 60    0600
DUMP TIME                                                            $ 14T 60    0610
```

```
STIFFNESS ANALYSIS                                          $ 14T 60    0620
LIST FORCES REACTIONS DISPLACEMENTS                         $ 14T 60    0630
LOAD LIST 3 TO 9                                            $ 14T 60    0640
LIST FORCE ENVELOPE MEMBERS 2 TO 6 SECTION FRACT NS 2 0. 1.0 $ 14T 60   0650
LIST FORCE ENVELOPE MEMBERS 1 7 SECTION FRACT DS 0. 0.2     $ 14T 60    0660
LOAD LIST 1 12                                              $ 14T 60    0670
LIST SECTION FORCES MEMBERS 2 TO 6 SECTION FRACT NS 2 0. 1.0 $ 14T 60   0680
LIST SECTION FORCES MEMBERS 1 7 SECTION FRACT DS 0. 0.2     $ 14T 60    0690
FINISH                                                                  0000
```

REFERENCE LIST

5.1 Gere and Weaver, "ANALYSIS OF FRAMED STRUCTURES."

5.2 Blodgett, "DESIGN OF WELDED STRUCTURES."

5.3 W. E. Mason and L. R. Herrmann, "ELASTIC ANALYSIS OF IRREGULAR SHAPED PRISMATIC BEAMS BY THE METHOD OF FINITE ELEMENTS."

Program Documentation is available at Bridge Computer Services

5.4 J. Sterling Kinney, "INDETERMINATE STRUCTURAL ANALYSIS."